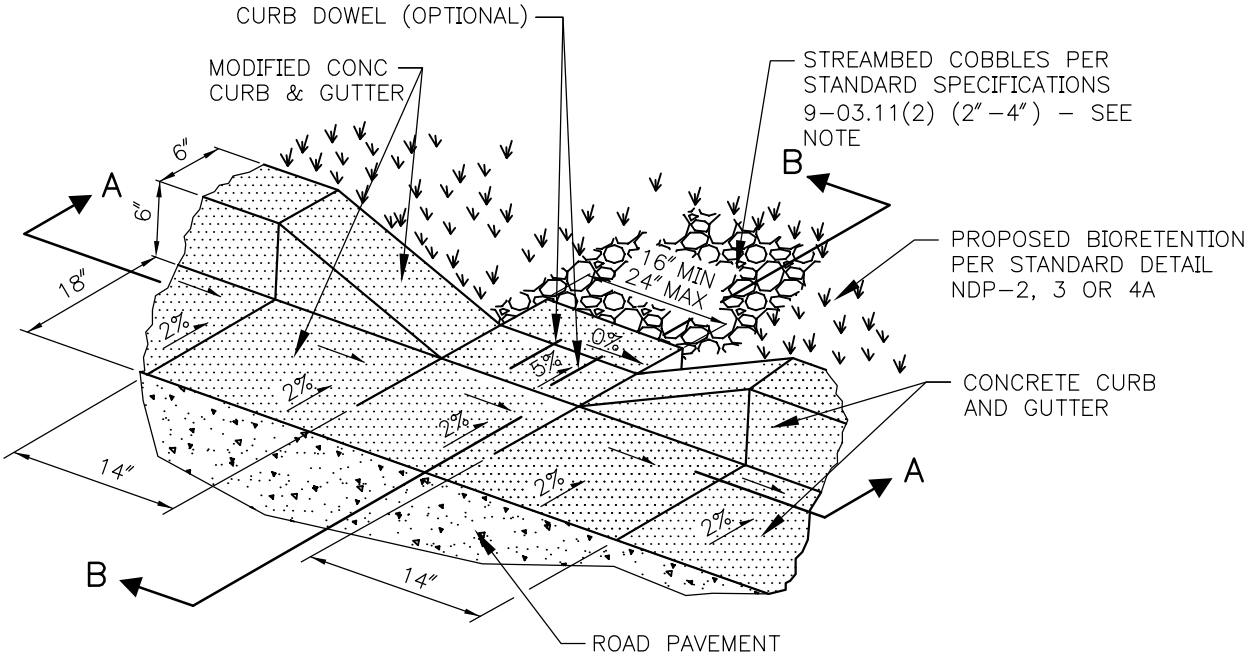

SECTION A-A

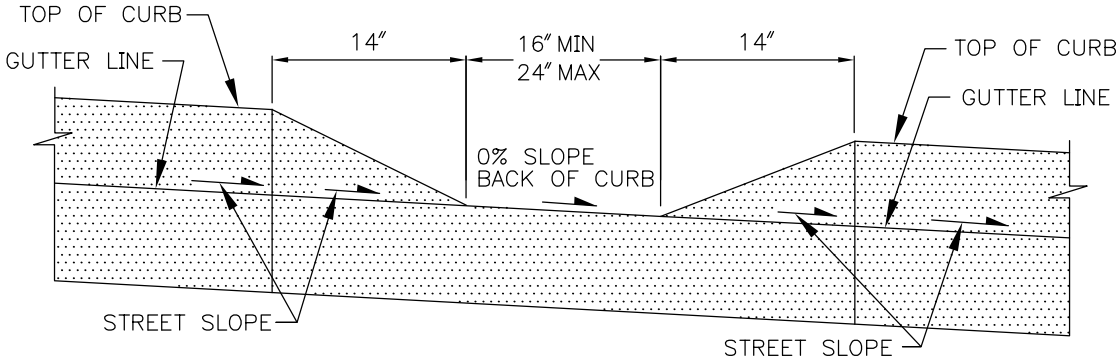

SECTION B-B

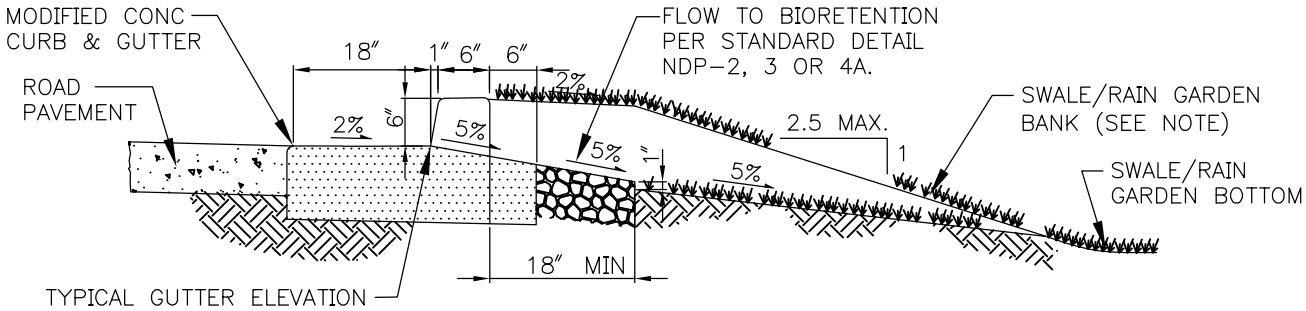

NOTE:

MODIFY INLET TO BIORETENTION PLANTER AS NEEDED TO PREVENT EROSION. THE STREAMBED COBBLES ARE OPTIONAL UNLESS REQUIRED BY THE UTILITY REVIEWER OR THE ENGINEER.

City of Bellevue

STORM AND SURFACE WATER UTILITY

TITLE

DRAIN CURB CUT OPENING FOR BIORETENTION

JANUARY 2016

NO SCALE

NO. NDP-10