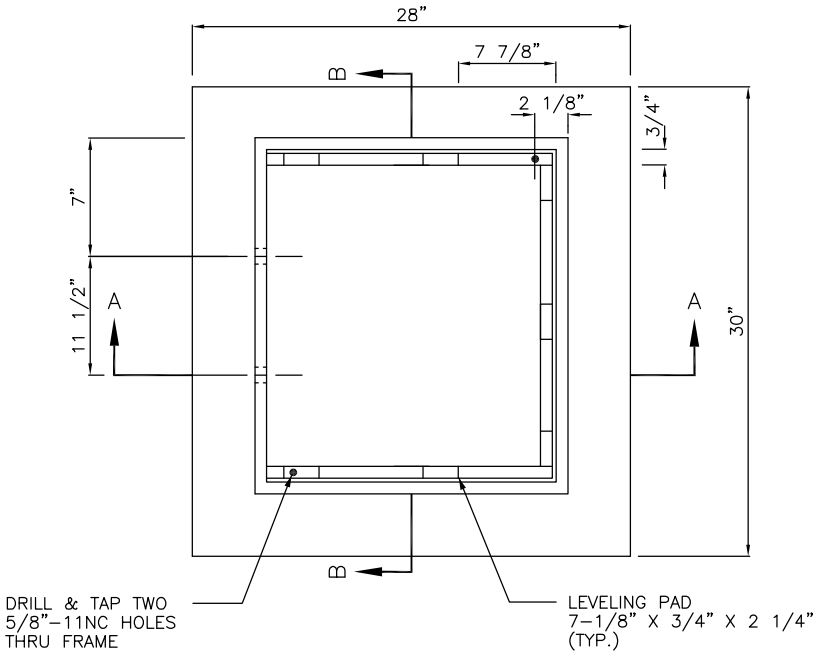

PLAN

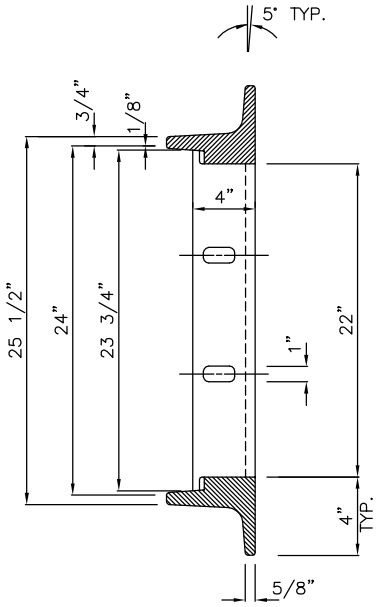

SECTION B–B

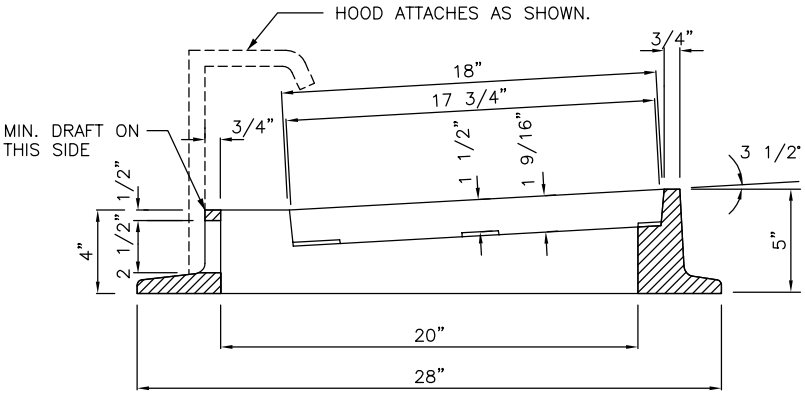

SECTION A–A

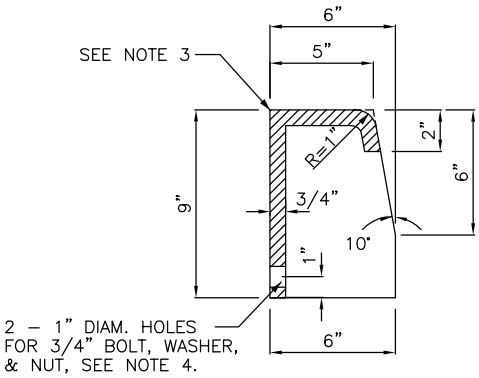

SECTION C–C

NOTES:

1. MATERIAL SHALL CONFORM TO SECTION 9–05.15(2) OF THE STANDARD SPECIFICATIONS.
2. PATTERN ON TOP SURFACE OF HOOD SHALL BE 3/16" NON–SKID DIAMOND.
3. BOLT, WASHER, AND NUT SHALL BE GALVANIZED OR CORROSION RESISTANT.
4. SEE DETAIL D–11 FOR INSTALLATION.

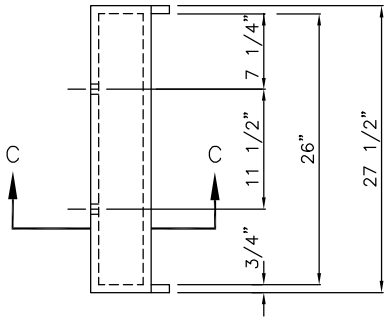

HOOD DETAIL

City of Bellevue

STORM AND SURFACE WATER UTILITY

TITLE

THROUGH–CURB INLET FRAME

NO. D–10

JANUARY 2016

NO SCALE