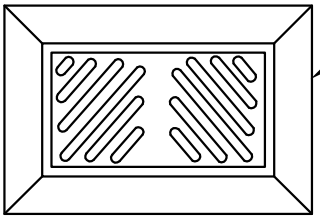

PROVIDE CONCRETE FUNNEL TO CONTAIN WATER FROM PRESSURE RELIEF DISCHARGE.

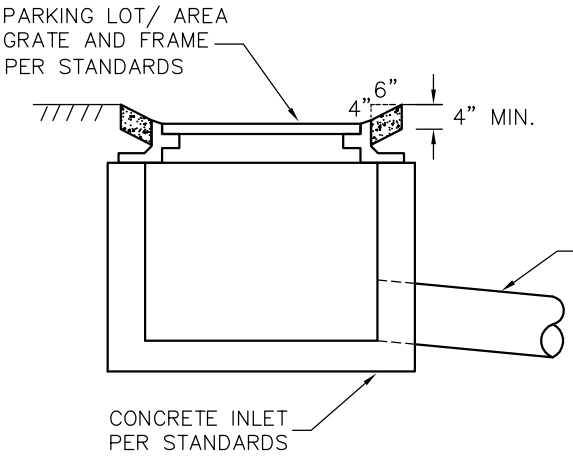


PRESSURE RELIEF DRAIN

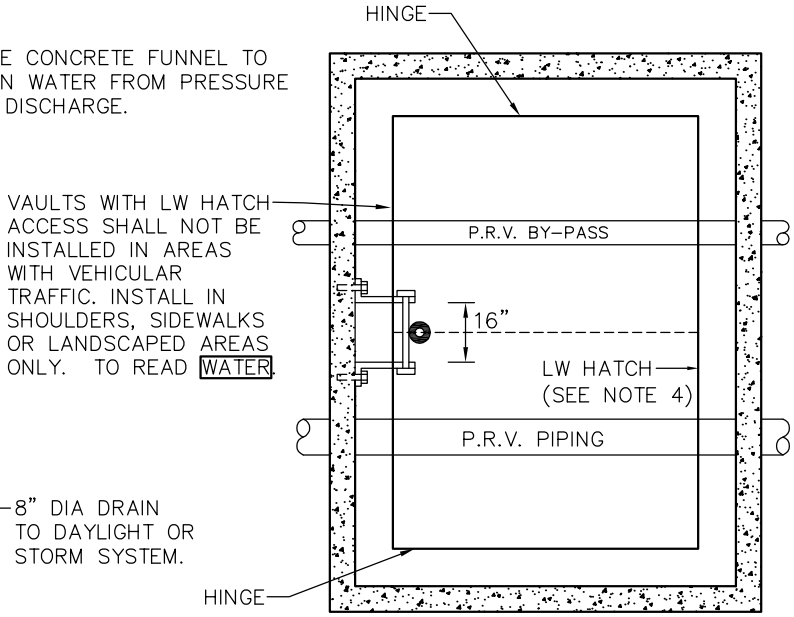


PLAN VIEW

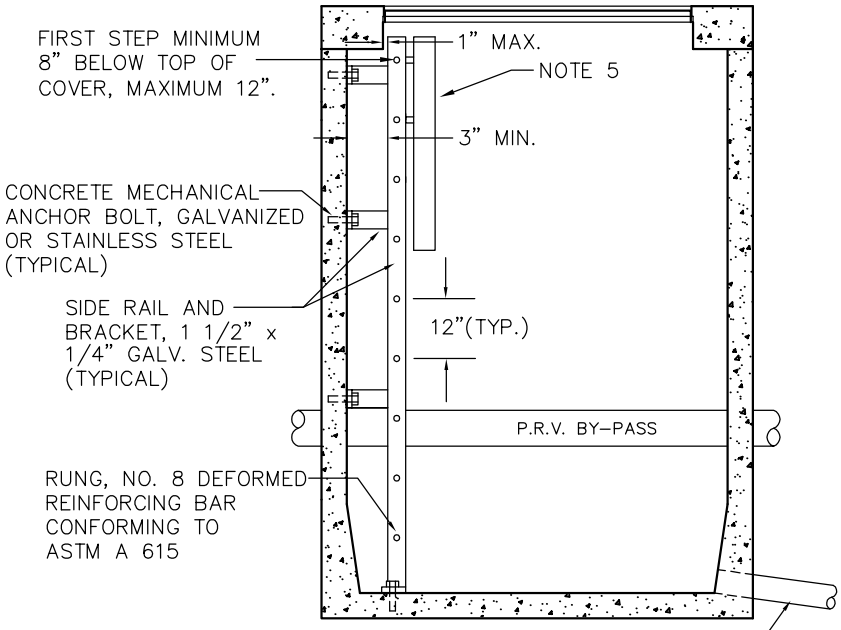


ELEVATION VIEW

NOTES:

1. LADDER TO BE SECURED TO VAULT WALL AT 3 LOCATIONS, ONE AT THE TOP, MIDDLE AND BOTTOM.
2. ALL LADDER PARTS TO BE GALVANIZED CONFORMING TO ASTM A 123
3. LOCATE PRESSURE RELIEF DRAIN OUTSIDE PEDESTRIAN AND TRAFFIC AREAS.
4. ACCESS HATCH SHALL BE LOCKING ALUMINUM LW PRODUCTS HHD 48"x60" DOUBLE DOOR MODEL RATED FOR H-30 LOADING WITH SLIP RESISTANT TREATMENT PER SECTION W4-17 OF THE ENGINEERING STANDARDS. HATCHES SHALL INCLUDE RECESSED PADLOCK HASP SIZED TO ACCEPT CITY OF BELLEVUE WATER DIVISION PADLOCKS (CONTACT LW PRODUCTS).
5. LADDER-UP ATTACHMENT REQUIRED ON ALL VAULT LADDERS. BILCO MODEL LU-2, OR EQUAL.
6. MANHOLE LID IS OPTIONAL ONLY WHEN STATION COVER IS LOCATED IN TRAFFIC.
7. DRAIN HATCH GUTTER DRAIN TO EXISTING CB OR DAYLIGHT.

City of Bellevue

WATER UTILITY

TITLE

PRESSURE REDUCING STATION ACCESS LADDER AND PRESSURE RELIEF DRAIN

NO. W-19

JANUARY 2014

NO SCALE