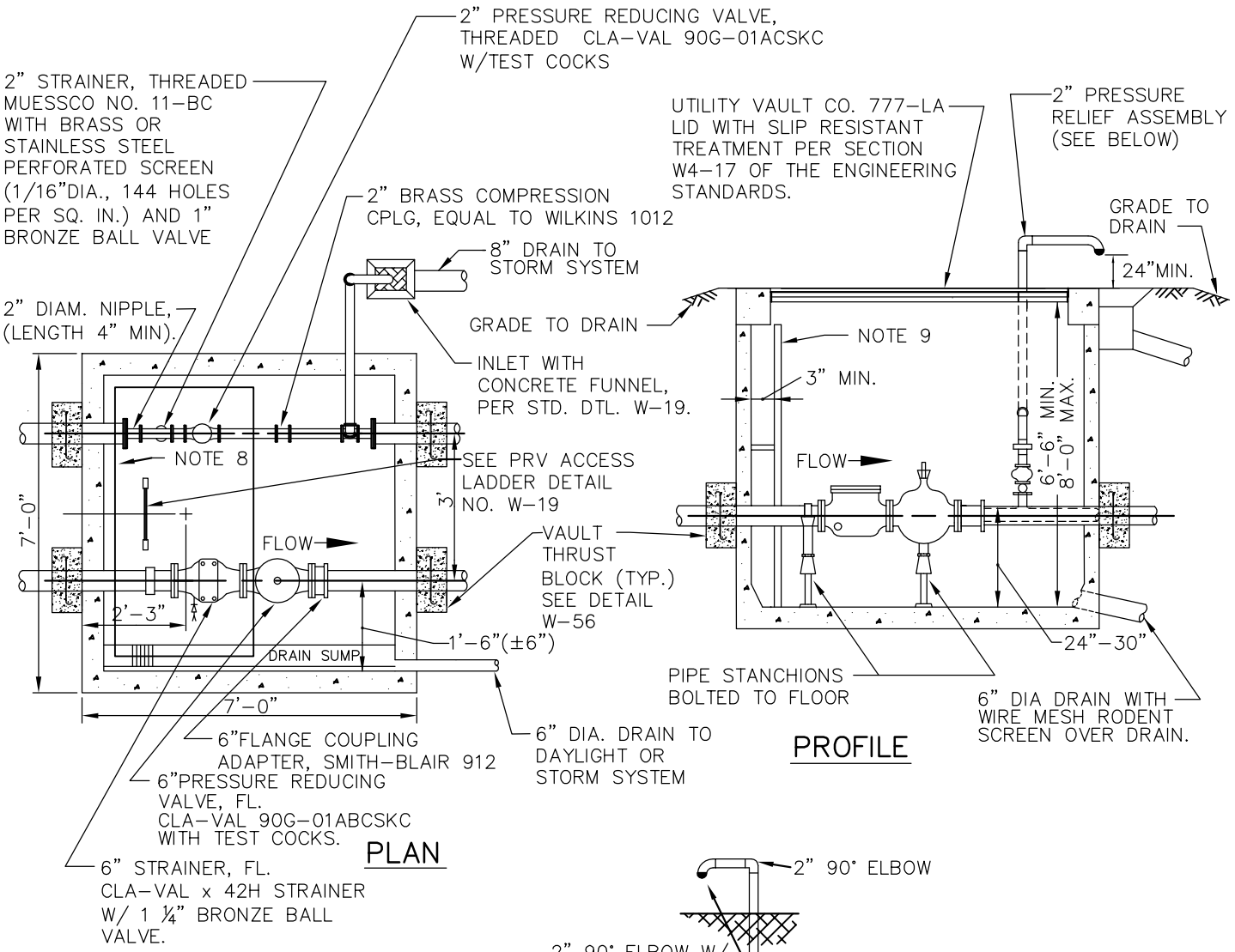

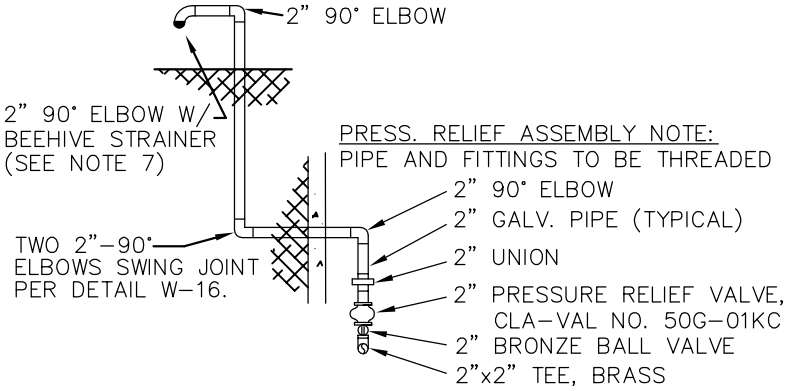

2" PRESSURE RELIEF ASSEMBLY

NOTES:

1. SIZING OF VALVES WILL BE MODIFIED FOR OTHER SIZES OF PIPE.
2. GALVANIZED LADDER TO BE SECURED TO VAULT PER STD. DTL. NO. W-19.
3. ALL P.R.V.s SHALL HAVE OPENING/CLOSING SPEED CONTROLS, EPOXY COATED BODY AND VALVE POSITION INDICATOR, CLA-VAL X101.
4. PILOT CONTROLS SHALL BE ON SIDE OF P.R.V. FACING INTERIOR OF VAULT TO PROVIDE EASY ACCESS.
5. ALL CLA-VAL PRVs AND PRESSURE RELIEF VALVES SHALL BE EQUIPPED W/STAINLESS STEEL TRIM (SEAT, STEM & COVER BEARING).
6. SEAL ALL PIPE PENETRATIONS THROUGH VAULT W/ LINK SEAL MODULAR SEALS.
7. PRESSURE RELIEF DISCHARGE DOWNSPOUT SHALL DIRECT WATER TOWARDS CENTER OF INLET GRATE.
8. HATCH AND LADDER PER DETAIL W-19.
9. PROVIDE LADDER-UP EXTENSION, BILCO MODEL LU-2, OR EQUAL.
10. MINIMUM 2' OF LEVEL, UNOBSTRUCTED AREA AROUND HATCHES.
11. PROVIDE CAST OR FIELD CORE DRILLED HOLES THROUGH VAULT WALLS FOR PIPE PENETRATIONS.

JANUARY 2014 NO SCALE

City of Bellevue

WATER UTILITY

TITLE

STANDARD PRESSURE REDUCING STATION

NO. W-17