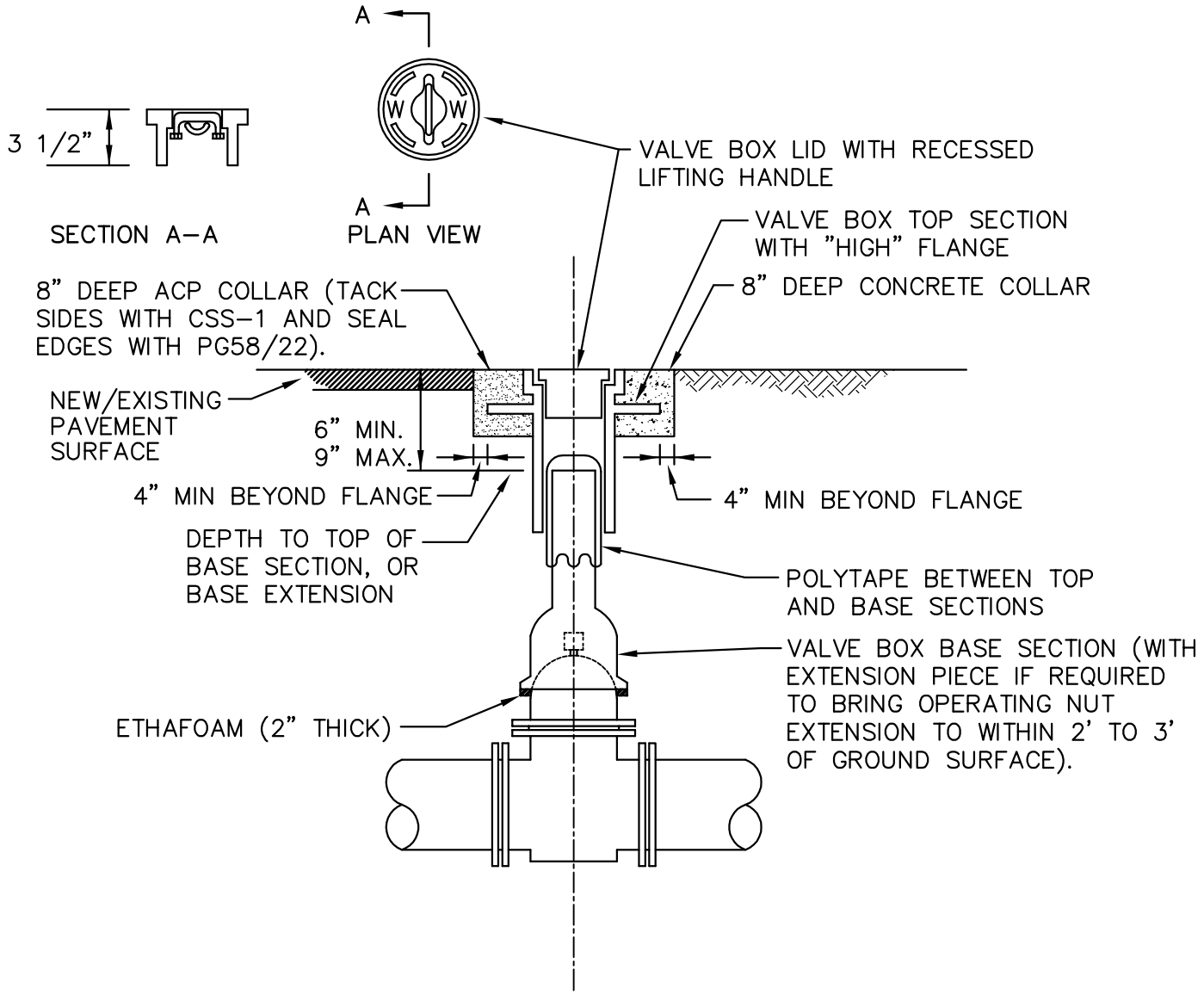

PAVED AREAS

UNPAVED AREAS

NOTES:

1. ALL PARTS SHALL BE CAST OR DUCTILE IRON AND COATED WITH ASPHALTIC VARNISH.
2. OLYMPIC FOUNDRY INC: #VB045 LID, TOP AND BASE SECTION.
3. RICH (VANRICH CASTING CORP.): TOP SECTION AND LID #045 WITH RICH STANDARD BASE.
4. 12" ADJUSTING SLEEVE #044A.

City of Bellevue

WATER UTILITY

TITLE

VALVE BOX INSTALLATION

JANUARY 2014

NO SCALE

NO. W–11