CITY OF BELLEVUE
UTILITIES DEPARTMENT

STORM AND SURFACE WATER ENGINEERING STANDARDS

January 2014

http://www.bellevuewa.gov/utilities_codes_standards_intro.htm

TABLE OF CONTENTS

CHAPTER D1 – GENERAL REQUIREMENTS

D1-01 GENERAL D1-1
D1-02 DEFINITIONS D1-1
D1-03 REFERENCES D1-4
D1-04 GOVERNMENTAL AGENCY REQUIREMENTS D1-5

CHAPTER D2 – THRESHOLDS AND PLAN SUBMITTAL

D2-01 GENERAL D2-1
D2-02 ADJUSTMENTS AND DEVIATIONS D2-1
D2-03 EXCEPTIONS D2-2
D2-04 ERRORS AND OMISSIONS D2-2
D2-05 THRESHOLDS D2-2
D2-06 STORMWATER SITE PLANNING AND SUBMITTALS D2-7
D2-07 PLAN FORMAT AND NOTES D2-12
D2-08 AS-BUILT DOCUMENTATION D2-19
D2-09 OPERATION AND MAINTENANCE MANUAL D2-22

CHAPTER D3 - HYDROLOGIC ANALYSIS

D3-01 GENERAL D3-1
D3-02 HYDROLOGIC MODELS D3-1
D3-03 SUMMARY OF DESIGN FLOW D3-14
D3-04 MINIMUM IMPERVIOUS AREAS D3-15
D3-05 FLOW CONTROL EXEMPTIONS D3-16
D3-06 SOIL TYPES D3-16

CHAPTER D4 - HYDRAULIC ANALYSIS & DESIGN

D4-01 GENERAL D4-1
D4-02 OUTFALLS AND DISCHARGE LOCATIONS D4-2
D4-03 OFF-SITE CAPACITY ANALYSIS D4-5
D4-04 CONVEYANCE SYSTEMS D4-6
D4-05 MANHOLES, CATCHBASINS AND INLETS D4-67
D4-06 FLOW CONTROL D4-70
D4-07 SETBACK REQUIREMENTS D4-94
D4-08 EASEMENT REQUIREMENTS D4-97
D4-09 PIPE COVERINGS AND ENCASEMENT D4-99

CHAPTER D5 - WATER QUALITY BMPs

D5-01 GENERAL D5-1
D5-02 SOURCE CONTROL BMPs D5-1
D5-03 RUNOFF TREATMENT BMPS D5-1

CHAPTER D6 – ON-SITE STORMWATER MANAGEMENT

D6-01 GENERAL D6-1
D6-02 SITE SUITABILITY AND BMP SELECTION D6-8
D6-03 DESIGN, SIZING, CONSTRUCTION AND MAINTENANCE D6-12
D6-04 NDP MATERIALS D6-54

CHAPTER D7 – MATERIALS

D7-01 GENERAL D7-1
D7-02 CONVEYANCE SYSTEMS D7-1
D7-03 MANHOLES, CATCHBASINS, AND INLETS D7-6
D7-04 FLOW CONTROL - DETENTION FACILITIES D7-9
D7-05 FLOW CONTROL - INFILTRATION SYSTEMS D7-13

CHAPTER D8 – METHODS OF CONSTRUCTION

D8-01 GENERAL D8-1
D8-02 CLEARANCE BETWEEN UTILITY LINES D8-1
D8-03 CONNECTIONS/MODIFICATIONS TO PUBLIC DRAINAGE SYSTEM D8-1
D8-04 CONVEYANCE SYSTEMS D8-2
D8-05 MANHOLES, CATCH BASINS, & INLETS D8-4
D8-06 FLOW CONTROL - DETENTION FACILITIES D8-5
D8-07 FLOW CONTROL - INFILTRATION SYSTEMS D8-7
D8-08 ABANDONING FACILITIES D8-7
D8-09 TESTING OF GRAVITY STORM DRAINS D8-9
D8-10 TELEVISION INSPECTION D8-11
D8-11 TESTING OF CONCRETE STRUCTURES D8-11
D8-12 TRENCHLESS CONSTRUCTION D8-13
D8-13 TRENCH EXCAVATION D8-13

CHAPTER D9 – NATURAL SYSTEMS

D9-01 GENERAL D9-1
D9-02 STREAMS D9-1
D9-03 WETLANDS D9-2

APPENDICES

APPENDIX D-1
STANDARD DETAILS ..... A(D1-1)

APPENDIX D-2
DRAFTING STANDARDS ..... A(D2-1)

APPENDIX D-3
SAMPLE TITLE BLOCK ..... A(D3-1)

APPENDIX D-4
SURFACE WATER APPROVED MATERIALS LIST ..... A(D4-1)

APPENDIX D-5
SURFACE WATER REFERENCE STANDARDS ..... A(D5-1)

CHAPTER D1 – GENERAL REQUIREMENTS

TABLE OF CONTENTS

Dl-01 GENERAL D1-1

D1-01.1 Purpose D1-1

Dl-02 DEFINITIONS D1-1

Dl-03 REFERENCES D1-4

Dl-04 GOVERNMENTAL AGENCY REQUIREMENTS D1-6

CHAPTER D1 - GENERAL REQUIREMENTS

Dl-01 GENERAL

D1-01.1 Purpose

These Engineering Standards set forth the minimum standards for the planning, design, and construction of storm and surface water systems.

The Storm and Surface Water Utility Code, Chapter 24.06 of the Bellevue City Code, adopted by Ordinance 5905 on October 5, 2009, is the basis for these engineering standards.

Although these standards are intended to apply to physical development within the City, the standards will not apply for all situations. Compliance with these standards does not relieve the Developer of the responsibility to apply conservative and sound professional judgment. These are minimum standards and are intended to assist, but not substitute for competent work by design professionals. The Utility may, at its sole discretion due to special conditions and/or environmental constraints, require more stringent requirements than would normally be required under these standards.

Dl-02 DEFINITIONS

The following terms as used in this document shall be defined and interpreted below. Other terms used in the Standards are defined and interpreted in the “Storm and Surface Water Utility Code” BCC 24.06.040 and the “Clearing and Grading Code” BCC 23.76.030.

“BMP”

Best Management Practice

"Contractor"

The person, partnership, firm or corporation contracting to do the work under these Documents. The term shall also include the Contractor's agents, employees and subcontractors.

"Details or Additional Drawings"

All details or drawings prepared to further explain or amplify the Plans, or for the revision of the same, all as herein provided.

“Developer”

Any individual, company, partnership, joint venture, corporation, association, society or group that has made, or intends to make, application to the City for permission to construct a surface water system connection, or extension, to the surface water system.

“DOE Manual”

“Stormwater Management Manual for Western Washington,” Washington State Department of Ecology, February 2005. When referenced, drainage systems shall

conform to the criteria set forth in the DOE Manual. Such criteria, unless modified herein, shall be the minimum standard which surface water systems must meet.

"Engineer"

The City of Bellevue Utilities Assistant Director for Engineering, or his or her duly authorized assistants, which includes, Engineering managers & staff, Consulting Engineers and/or Inspectors.

"Equipment"

The machinery, accessories, appurtenances and manufactured articles to be furnished and/or installed under the Project.

"Flooding"

The term "flooding" as used in the Storm Code Chapter 24.06.065 G 5 shall mean any natural or human caused event that endangers the safety of the public through water entering a structure inhabited by the public.

"Flow Control Credit"

Credit toward reducing the size of downstream flow control facility(ies) through the use of on-site stormwater management.

"Infiltration BMP or NDP"

A natural drainage practice that infiltrates stormwater without an underdrain, resulting in all runoff being infiltrated or lost to evapotranspiration. These facilities are distinguished from 'partial infiltration' facilities which do include an underdrain, and 'storage BMPs' which do not infiltrate at all.

"LID Manual"

Low Impact Development Technical Guidance Manual for Puget Sound, published by Puget Sound Partnership and Washington State University Pierce County Extension, January, 2005 or current.

"Material or Materials"

These words shall be construed to embrace machinery, manufactured articles, materials of construction (fabricated or otherwise) and any other classes of material to be furnished in connection with the Project.

"Minimum Requirements" (MRs)

Minimum Requirements refer to the regulations contained in BCC 24.06.065 and applicable engineering standards, which describe requirements for storm water management for development and redevelopment as required by the NPDES Permit. Briefly:

MR1 = Preparation of Storm Water Site Plans

MR2 = Construction Storm Water Pollution Prevention Plan

MR3 = Source Control of Pollution

MR4 = Preservation of Natural Drainage Systems and Outfalls

MR5 = On-site Storm Water Management

MR6 = Runoff Treatment

MR7 = Flow Control

MR8 = Wetlands Protection

MR9 = Operations and Maintenance

"MS4"

Municipal Separate Storm Sewer System, as defined in the NPDES Permit.

"Natural Drainage Practice (NDP)"

Small-scale, distributed BMP that controls the volume, peak flow rate, and amount of pollutants in stormwater runoff from a developed project site. NDPs include bioretention, pervious pavement, rain recycling, and vegetated roofs.

"New impervious surface"

A new non-vegetated surface area that either prevents or retards the entry of water into the soil mantle as under natural conditions prior to development. A new non-vegetated surface area which causes water to run off the surface in greater quantities or at an increased rate of flow from the flow present under natural conditions prior to development. Common impervious surfaces include, but are not limited to, new roof tops, walkways, patios, driveways, parking lots or storage areas, concrete or asphalt paving, gravel roads, packed earthen materials, and oiled, macadam or other surfaces which similarly impede the natural infiltration of stormwater. Open, uncovered retention/detention facilities shall not be considered as impervious surfaces for purposes of determining whether the thresholds for application of minimum requirements are exceeded. Open, uncovered retention/detention facilities shall be considered impervious surfaces for purposes of runoff modeling.

"Or Equal"

Any manufactured article, material, method, or work which, in the opinion of the City, is equally desirable or suitable for the purposes intended in these standards, as compared with similar articles specifically mentioned herein.

"Plans"

All approved drawings or reproductions of approved drawings made or to be made pertaining to the work provided for in the permit or Developer Extension Agreement.

"Project"

The structure, facility, system or improvement to be constructed in whole or in part.

"Reference Specifications"

Reference specifications shall mean the technical specifications of other agencies incorporated or referred to herein.

"Replaced Impervious Surfaces"

Means, for structures, the removal and replacement of impervious surfaces down to the foundation. For other impervious surfaces, the removal down to bare soil, or base course, and replacement.

"Sizing Factor"

A number used to size an on-site stormwater management facility to meet a particular Minimum Requirement, expressed as a percentage of the contributing impervious area draining to the facility.

"Standards"

City of Bellevue Utilities Department Surface Water Engineering Standards.

"Standard Details"

City of Bellevue Utilities Department standard detail drawings.

"Standard Plans"

Latest edition of the "Standard Plans for Road and Bridge Construction," Washington State Department of Transportation and the American Public Works Association, including all amendments.

"Standard Specifications"

Latest edition of the "Standard Specifications for Road, Bridge and Municipal Construction", English edition, Washington State Department of Transportation and the American Public Works Association including all amendments.

"Words and Phrases"

Whenever the words, "as directed", "as required", "as permitted", or words of like effect are used, it shall be understood that the direction, requirement or permission of the City is intended. The words, "sufficient", "necessary", "proper", and the like shall mean sufficient, necessary or proper in the judgment of the City. The words, "approved", "acceptable", "satisfactory", or words of like import shall mean approved by or acceptable to the City.

"Work"

The work necessary to manufacture and deliver machinery, equipment and material and/or the furnishing of all labor, tools, material, equipment, construction equipment, working drawings, where required, and other, necessities for the construction or erection of the structures shown and called for in the plans, specifications and permit/Developer Extension Agreement, and the act of constructing or erecting said structures complete.

Dl-03 REFERENCES

ACI 522.1, Specifications for Pervious Concrete Pavement. Published by the American Concrete Institute, Farmington Hills, Michigan.

Dam Safety Guidelines, Dam Safety Division, Washington State Department of Ecology, current edition.

Design of Small Dams, Bureau of Reclamation, United States Department of the Interior, third edition 1987.

Flood Insurance Study – King County, Washington and Incorporated Areas, National Flood Insurance Program, Federal Emergency Management Agency (FEMA), current edition.

Guidelines and Resources for Implementing Soil Quality and Depth BMP T5.13 in WDOE Stormwater Management Manual for Western Washington. Multiple authors, 2009 or current. http://soilsforsalmon.org

Guidelines for Bank Stabilizations Projects, King County publication.

Hydraulic Code Rules, Chapter 220 - 110, Washington Administrative Code.

Integrated Streambank Protection Guidelines, Washington Department of Fish and Wildlife and Washington Department of Transportation, April 2003.

Land Use Code (LUC), Bellevue City Codes, current edition.

Low Impact Development – Technical Guidance Manual for Puget Sound, Puget Sound Action Team and Washington State University Peirce County Extension, January 2005 or current edition.

Online Geodatabase, GeomapNW, The Pacific Northwest Center for Geologic Mapping Studies, http://geomapnw.ess.washington.edu.

Rain Garden Handbook for Western Washington Homeowners, Washington State University, Pierce County Extension, June 2007. http://county.wsu.edu/mason/nrs/water/Documents/Raingarden_handbook.pdf.

Soil Survey - King County Area, Washington, Natural Resources Conservation Service (formerly Soil Conservation Service), U. S. Department of Agriculture.

Stormwater Management Manual for Western Washington, Washington State Department of Ecology. February, 2005.

http://www.ecy.wa.gov/programs/wq/stormwater/manual.html.Surface Water Design Manual, King County, Washington, January 9, 2009.

WDWF Integrated Streambank Protection Guidelines, published by Washington Department of Fish and Wildlife.

Wherever references are made to the standards, specifications, or other published data of the various national, regional, or local organizations, such organizations may be referred to by their acronym or abbreviation only. As a guide to the user, the following acronyms or abbreviations which may appear shall have the meanings indicated herein:

AASHTO	American Association of the State Highway and Transportation Officials
ACI	American Concrete Institute
ANSI	American National Standards Institute, Inc.
APWA	American Public Works Association

ASTM	American Society for Testing and Materials
AWWA	American Water Works Association
DNRP	King County Department of Natural Resources
DOE	Washington State Department of Ecology
DOH	Washington State Department of Health
FHWA	Federal Highway Administration
Health	Public Health -- Seattle and King County
NRCS	Natural Resource Conservation Service (formerly Soil Conservation Service)
RCW	Revised Code of Washington
USEPA	United States Environmental Protection Agency
WAC	Washington Administrative Code
WDWF	Washington Department of Fish & Wildlife
WSDOT	Washington State Department of Transportation

Dl-04 GOVERNMENTAL AGENCY REQUIREMENTS

All construction on City, County or State roads or right-of-way shall be done in accordance with that agency's standards and requirements and in accordance with all franchise and/or permit requirements. The Contractor is responsible to determine these requirements prior to construction.

Where conflict exists between these Standards and permit requirements, the most stringent permit requirements shall take precedence.

END OF CHAPTER D1

CHAPTER D2 – THRESHOLDS AND PLAN SUBMITTAL

TABLE OF CONTENTS

D2-01 GENERAL D2-1

D2-02 ADJUSTMENTS AND DEVIATIONS D2-1

D2-02.1 General D2-1

D2-02.2 Adjustment and Deviation Criteria D2-1

D2-02.3 Adjustment and Deviation Process D2-2

D2-03 EXCEPTIONS D2-2

D2-04 ERRORS AND OMISSIONS D2-2

D2-05 THRESHOLDS D2-2

D2-05.1 Threshold Discharge Area D2-2

D2-05.2 Applicability D2-3

D2-05.3 Projects subject to Regulation D2-3

D2-06 STORMWATER SITE PLANNING AND SUBMITTALS D2-7

D2-06.1 Submittal Requirements when site is vested in 2009 Storm Drainage Code D2-8

D2-06.2 Submittal Requirements for Minimum Requirements 1 through 5 only D2-8

D2-06.3 Submittal Requirements for Minimum Requirements 1 through 9 (When MR6, MR7, MR8 and/or MR9 apply in addition to MR1 through MR5) D2-10

D2-07 PLAN FORMAT AND NOTES D2-12

D2-07.1 Submittal Standards D2-12

D2-07.2 Storm Drainage General Plan Notes D2-15

D2-08 AS-BUILT DOCUMENTATION D2-19

D2-08.1 General Standards D2-19

D2-08.2 Required Information D2-20

D2 - 09 OPERATION AND MAINTENANCE MANUAL D2-21

D2-09.1 Storm Drainage O&M Manual Agreement for Utilities Storm Connections (MR 1-5)……..D2-21

D2-09.2 Storm Drainage O&M Manual Agreement for Utilities Extension Agreements (MR 1-9)…….D2-22

TABLES

Table 2.1 Treatment Requirements by Threshold Discharge Area..... D2-6

Table 2.2 Flow Control & On-site Stormwater Management Requirements by Threshold Discharge Area..... D2-7

FIGURES

Figure 2.1 Threshold Discharge..... D2-3

Figure 2.2 Flow Chart for Determining Requirements for New Development D2-4

Figure 2.3 Flow Chart for Determining Requirements for Redevelopment D2-5

Figure 2.4 - Sample Stormwater Facility Maintenance Activity Log..... D2-24

CHAPTER D2 – THRESHOLDS AND PLAN SUBMITTAL

D2-01 GENERAL

Following these standards to design the stormwater system will help ensure a timely review of the proposed project and keep review costs to a minimum.

A drainage system which includes unreasonable and intensive maintenance or operational requirements as determined by the City shall be rejected in favor of a drainage system which does not place undue burdens on the owner/operators of such system.

D2-02 ADJUSTMENTS AND DEVIATIONS

D2-02.1 General

The applicant may propose an Adjustment to the Minimum Requirements described in BCC 24.06.065.D, or a Deviation from the Storm and Surface Water Engineering Standards. Proposed Adjustments or Deviations must be project specific. An Adjustment or Deviation may take longer to review, resulting in increased processing costs. The Applicant acknowledges these risks when submitting a request for an Adjustment or Deviation.

D2-02.2 Adjustment and Deviation Criteria

The City's decisions to grant, deny, or modify proposed Adjustments or Deviations shall be based on evidence that the request meets the following criteria:

1) Adjustment Criteria

    A The Adjustment provides substantially equivalent environmental protection; and

    B The Adjustment is based on sound engineering practices; and

    C The Adjustment meets the objectives of safety, function, environmental protection and facility maintenance.

2) Deviation Criteria

    A The Deviation will achieve the intended result through a comparable or superior design; and

        (a) The Deviation provides substantially equivalent environmental protection; and

        (b) The Deviation is based on sound engineering practices; and

(c) The Deviation meets the objectives of safety, function, environmental protection, and facility maintenance.

D2-02.3 Adjustment and Deviation Process

Requests for Adjustments or Deviations shall be:

1) Provided to the Utilities Reviewer in writing prior to implementation; and

2) Demonstrate how the proposed Adjustment or Deviation meets criteria listed or referenced above (e.g. written finding of fact); and

3) May be reviewed by the Utilities Technical Team before a decision is made; and

4) The decision by the City shall be final.

Any approved Adjustments or Deviations shall be included with the final approved drainage plan.

D2-03 EXCEPTIONS

A request for an Exception to the Minimum Requirements may be submitted with a permit or approval listed in LUC 20.35.015 (C) or, if none of the listed permits or approvals apply to the project or if a decision is necessary to finalize the site layout, the applicant may submit a request for an Exception with submittal of a Predevelopment Services application. The Director may approve a request for an exception provided the applicant can demonstrate compliance with the criteria contained in BCC 24.06.065(C).

D2-04 ERRORS AND OMISSIONS

Any errors or omissions in the approved plans or information used as a basis for such approvals may constitute grounds for withdrawal of any approvals and/or stoppage of any or all of the permitted work, as determined by the City. It shall be the responsibility of the Developer to show cause why such work should continue, and make such changes in plans that may be required by the City before the plans are approved.

D2-05 THRESHOLDS

D2-05.1 Threshold Discharge Area

An onsite area draining to a single natural discharge location or multiple natural discharge locations that combine within one-quarter mile downstream (as determined by the shortest flow path) is a “threshold discharge area”. The examples in Figure 2.1 below illustrate this definition. This definition is intended to clarify how the thresholds are applied to project sites with multiple discharge points.

The City's Land Use Code includes thresholds for pervious pavement for Land Use Code purposes. Those thresholds may be different for Storm & Surface Water Utility Code purposes. Use guidance herein for all Storm & Surface Water Utility Code purposes.

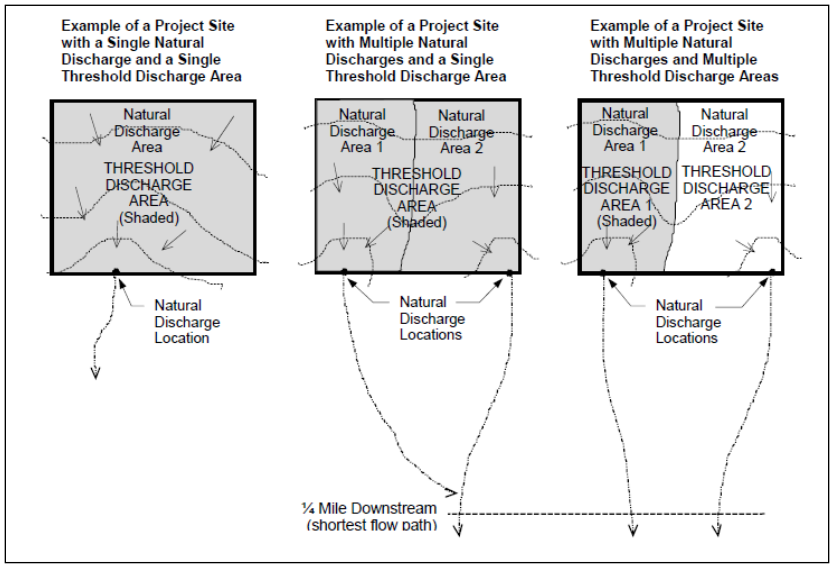

Figure 2.1 Threshold Discharge

D2-05.2 Applicability

Thresholds help define the applicability of the Minimum Requirements to development and redevelopment projects based on project type and size. A narrative description of the threshold applicability process is included in Section 24.06.065 of the Storm and Surface Water Utility Code. Figures 2.2 and 2.3 present the same applicability determination process in flow chart graphics.

For redevelopment, if the runoff from the new impervious surfaces and converted pervious surfaces is not separated from runoff from other surfaces on the project site, the stormwater treatment facilities must be sized for the entire flow that is directed to them.

D2-05.3 Projects subject to Regulation

All project sites in Bellevue are subject to the Minimum Requirements per Chapter 24.06.065, unless exempt per 24.06.065(B), and are subject to the Minimum Requirements for development and redevelopment as outlined in Figure 2.2 and Figure 2.3.

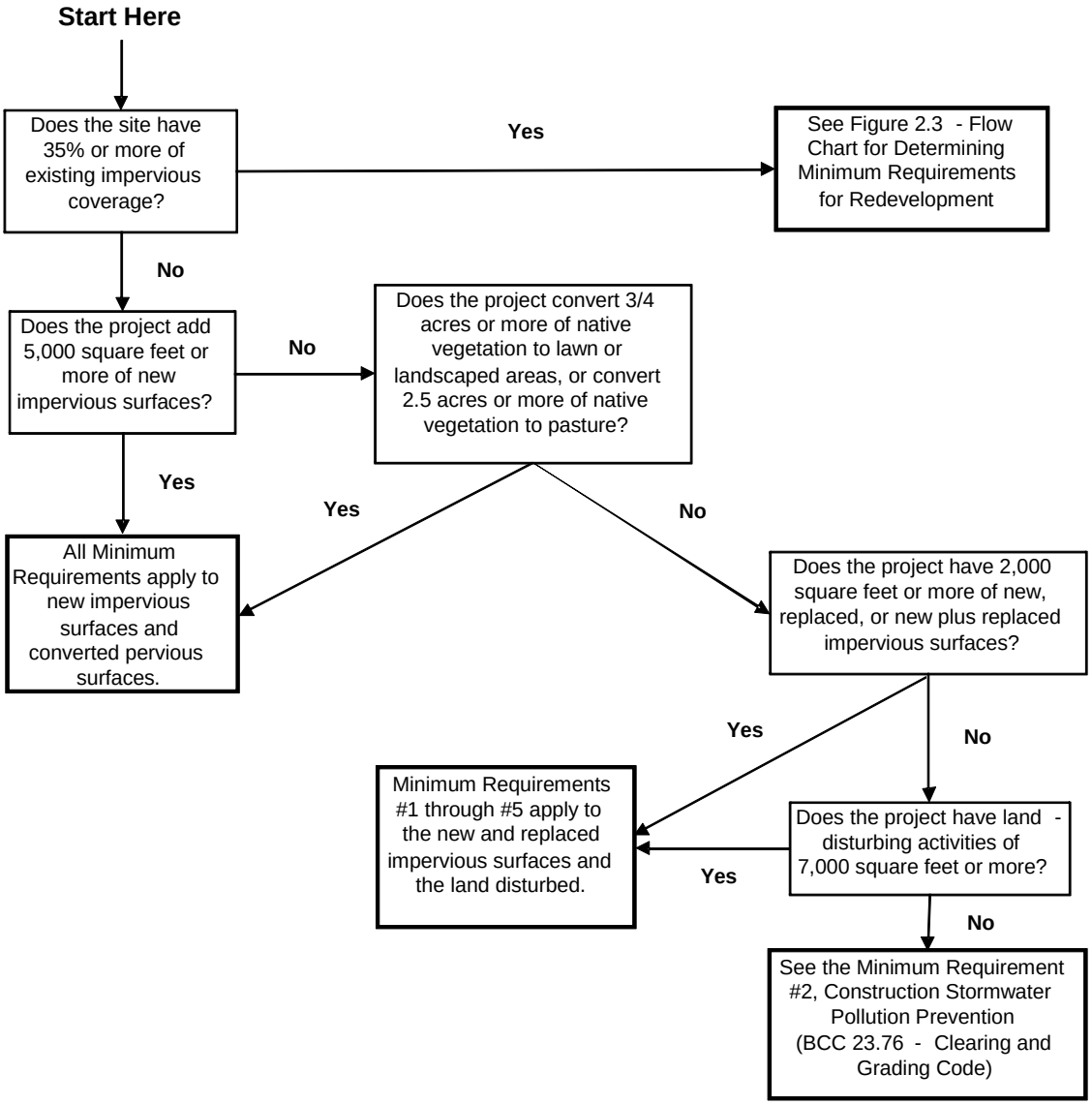

Figure 2.2 Flow Chart for Determining Requirements for New Development

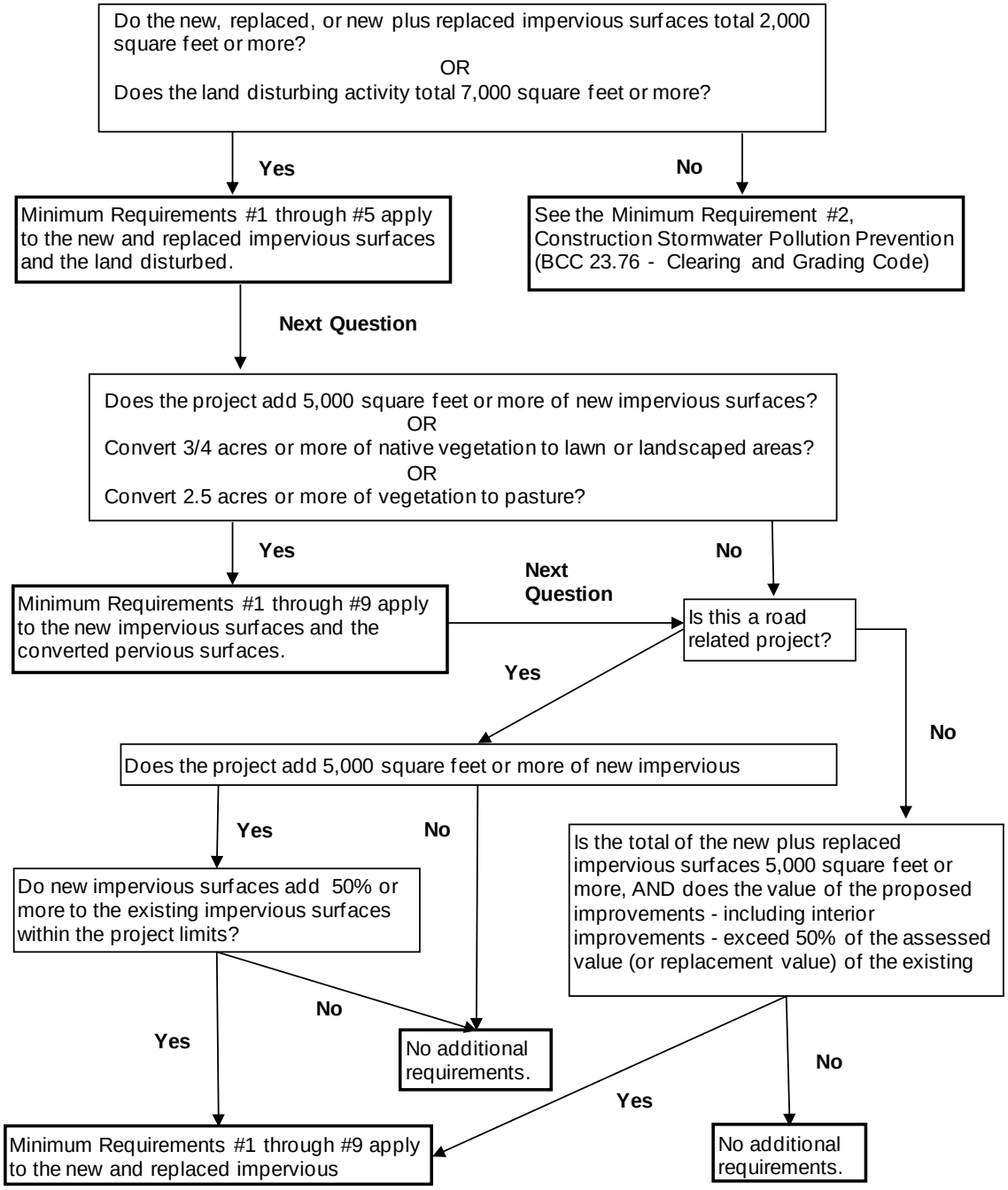

Figure 2.3 Flow Chart for Determining Requirements for Redevelopment

The Developer may meet the Minimum Requirements for an equivalent (flow and pollution characteristics) area within the same site. This method is known as 'Area Substitution'. For public road projects, the water quality treatment for equivalent area does not have to be within the project limits, but must drain to the same receiving water. For flow control of public roads' projects, the equivalent area must be in same stream basin and capacity analysis must be done to demonstrate 100-year capacity is available. If

used for a project, the Developer must consult with the City to determine an appropriate equivalent area.

Appendix C of Volume III of the DOE Manual directs users to model impervious area directed to various low impact development facilities as landscaped area, 50% landscaped area, or pasture. Those same modeling credits may be used when summing project areas to determine whether the thresholds are exceeded.

Project Thresholds for the construction of stormwater treatment facilities (MR6 Runoff Treatment) are presented in Table 2.1 and include:

Projects in which the total of effective, pollution-generating impervious surface (PGIS) is 5,000 square feet or more in a threshold discharge area of the project, or

Projects in which the total of pollution-generating pervious surfaces (PGPS) is three-quarters (3/4) of an acre or more in a threshold discharge area, and from which there is a surface discharge in a natural or man-made conveyance system from the site.

Table 2.1 Treatment Requirements by Threshold Discharge Area

	< ¾ acres of PGPS	**≥ ¾ acres PGPS**	**< 5,000 sf PGIS**	**≥ 5,000 sf PGIS**
Treatment Facility		✔		✔
On-site Stormwater BMPs	✔	✔	✔	✔

PGPS = pollution-generating pervious surfaces

PGIS = pollution-generating impervious surfaces

sf = square ft

Project Thresholds for the construction of flow control facilities (MR7) and/or on-site stormwater management (MR5) BMPs to achieve the standard flow control requirement for western Washington are shown in Table 2.2.

Table 2.2 Flow Control & On-site Stormwater Management Requirements by Threshold Discharge Area

	Flow Control Facilities	On-site Stormwater Management BMPs
< ¾ acres conversion to lawn/landscape, or < 2.5 acres to pasture		✔
≥ ¾ acres conversion to lawn/landscape, or ≥ 2.5 acres to pasture	✔	✔
< 10,000 square feet of effective impervious area		✔
≥ 10,000 square feet of effective impervious area	✔	✔
≥ 0.1 cubic feet per second increase in the 100-year flood frequency (1)	✔	✔

Note: (1) Estimated using the Western Washington Hydrology Model or other approved model. See Chapter D3- Hydrology.

For MR5, On-site Stormwater Management, see Chapter D6.

For MR6, Runoff Treatment, see Chapter D5

For MR7, Flow Control, see Chapter D4

For Hydrologic Analysis information, see Chapter D3

D2-06 STORMWATER SITE PLANNING AND SUBMITTALS

Based upon the analysis of existing site conditions, locate the buildings, roads, parking lots, utilities, and landscaping features for the proposed development. Consider the following points when laying out the site:

1) Fit development to the terrain to minimize land disturbance; Confine construction activities to the least area necessary, and away from critical areas;

2) Preserve areas with natural vegetation (especially forested areas) as much as possible;

3) On sites with a mix of soil types, locate impervious areas over less permeable soil (e.g., till), and try to restrict development over more porous soils (e.g., outwash);

4) Cluster buildings together;

5) Minimize impervious areas; and

6) Maintain and utilize the natural drainage patterns.

The development layout designed here will be used for determining threshold discharge areas, for calculating whether thresholds for Minimum Requirements are exceeded, and for the drawings and maps required for the Drainage Report and Stormwater Site Plan.

D2-06.1 Submittal Requirements when site is vested in 2009 Storm Drainage Code

Projects are vested as described in the Clearing and Grading Code, BCC 23.76.045. Generally, a complete application for building permit or subdivision sets vesting. Or, a Clearing and Grading permit sets vesting if neither building nor subdivision processes are applicable. Permit expiration results in loss of vesting.

Projects that are not required to submit a Utility Developer Extension Agreement:

Show the storm drainage connection on the site plan required with the permit application. A Storm connection permit may also be required, as determined by the Utilities reviewer.

If using On-site Stormwater Management techniques, rather than a conventional tightline connection, use D2-06.2 below.

Projects that are required to submit a Utility Developer Extension Agreement:

Show the storm drainage connection on the site plan required with the permit application. A Utility Developer Extension Agreement must be submitted with, or prior to, the Clearing and Grading and Building permits.

On-site Stormwater Management techniques may be used to reduce the size of flow control and runoff treatment facilities. Select and design on-site facilities in accordance with Chapter D6, and size facilities to satisfy the vested code requirements using an approved model per Section D3-02 or the applicable standard.

D2-06.2 Submittal Requirements for Minimum Requirements 1 through 5 only

A Geotechnical Report as described in the Development Services plan description sheet "Geotechnical Report and Stability Analysis Requirements," is required when infiltration facilities (including bioretention or pervious pavement) are proposed and there is a stream, wetland, steep slope or landslide hazard area on or within 100 feet of the site.

Storm Drainage Report (no pages may be larger than 11" x 17"), including:

1) Project Overview

General description of project: pre-developed and developed site conditions site area; square footage of each type of impervious surface, lawn and landscape areas, non-disturbance areas: and existing stormwater runoff conditions, including runoff from off-site, natural and manmade drainage systems.

Summary of proposed on-site stormwater management facilities. Use Chapter D6 in these Standards to choose the facilities and explain why they were chosen.

2) Site Maps

A. Existing Conditions

(a) Existing site and drainage conditions. Identify areas of high seasonal groundwater per geotechnical report requirements.

(b) Show infiltration test locations. Note test method used, calculated long-term infiltration rates, and correction factors. Use the simplified infiltration test per Section D4-06.7, or a method from Volume III, 3.3.6 of the DOE Manual.

3) Proposed Development

A Show each type of impervious surface, lawn and landscape areas, non-disturbance areas. Note the square footage of each, within each threshold discharge area.

B Show the proposed on-site stormwater management facilities. Show setbacks, as required by Land Use Code and Chapter D4.

GeoMapNW soils database, where available (primarily BelRed area). If not available, Natural Resources Conservation Service (NRCS) Soil Survey Map for the location with the site boundaries marked.

Drainage map, showing flow path from site to receiving water (up to ¼ mile), and threshold discharge areas. Indicate the receiving water (lake or major stream). Include upstream information for any areas draining onto the site. Include pipe sizes and structures.

Sizing calculations, or simple sizing tables from Chapter D6, with applicable values circled, for proposed on-site stormwater management facilities.

Permanent Stormwater Control Plan, including:

- Show on-site stormwater management facilities on site plan, as required on Development Services Submittal Requirements sheets for single family residential or commercial sites.
- Include sufficient profiles and details needed for review, for the Contractor to construct the facilities, and for the constructed facilities to be verified by the City inspector.
- If a separate plan sheet is needed for clarity, use of the submittal standards in D2-06.2 is recommended.

- If a Utility Developer Extension Agreement is required for water, sewer or storm drainage facilities, Plans for the drainage facilities may be combined with water and sewer if they remain readable.

As-Built drawings must be submitted following inspection, prior to occupancy, and approved by the City.

Operation and Maintenance Manual (O & M Manual) for Stormwater Management Facilities per Section D2-09.

D2-06.3 Submittal Requirements for Minimum Requirements 1 through 9 (When MR6, MR7, MR8 and/or MR9 apply in addition to MR1 through MR5)

Geotechnical Report and Stability Analysis Requirements, as described in Development Services plan description sheet.

Storm Drainage Report (no pages may be larger than 11" x 17"), including:

1) Project Overview

General description of project: pre-developed and developed site conditions, site area; square footage of each type of impervious surface, lawn and landscape areas, and non-disturbance areas; existing stormwater runoff conditions, including runoff from off-site, natural and manmade drainage systems.

Summary of proposed on-site stormwater management facilities. Use Chapter D6 in these Standards to choose the facilities and explain why they were chosen.

Vicinity map showing the property location, all roads bordering the site, significant geographic features, and critical areas and their buffers, and flow path(s) from site to receiving water (up to 1 mile). Include upstream information for any areas draining onto the site. Include pipe sizes and structures.

2) Site Maps showing:

A Existing Conditions

(a) Existing site and drainage conditions. Identify areas of high seasonal groundwater.

(b) Infiltration test locations, test method used, calculated long-term infiltration rates, and correction factors.

B Proposed Development

(a) Show each type of impervious surface, lawn and landscape areas, and non-disturbance areas. Note the square footage of each.

3) Show the proposed on-site stormwater management facilities. Show setbacks, as required by Land Use Code and Chapter D4.

4) GeoMapNW soil map, or if not available, NRCS Soil Survey Map for the location with the site boundaries marked.

5) Drainage map, showing flow path from site to receiving water (up to ¼ mile), and threshold discharge areas. Indicate the receiving water (lake or major stream). Include upstream information for any areas draining onto the site. Include pipe sizes and structures.

6) Sizing calculations, for proposed on-site stormwater management facilities. These calculations shall bear the signature and stamp of the responsible Civil Engineer. Include:

   A Provide narrative, mathematical, and graphic presentations of model input parameters selected for the developed site condition, including acreage, soil types, and land covers, road layout, and all drainage facilities.

   B Developed basin areas, threshold discharge areas, and flows should be shown on a map and cross-referenced to computer printouts or calculation sheets. Developed basin flows should be listed and tabulated.

   C Any documents used to determine the developed site hydrology should be included. Whenever possible, maintain the same basin name as used for the pre-developed site hydrology. If the boundaries of a basin have been modified by the project, that should be clearly shown on a map and the name modified to indicate the change.

   D If treatment facilities are proposed, provide a listing of the water quality menus used per Section D5-03. If flow control facilities are proposed, provide a confirmation of the flow control standard being achieved (e.g., the DOE flow duration standard).

   E A drawing of the flow control and treatment facilities and appurtenances. Show basic measurements necessary to calculate the storage volumes available from zero to the maximum head, all orifice/restrictor sizes and head relationships, control structure/restrictor placement, and placement on the site.

   F Include computer printouts, calculations, equations, references, storage/volume tables, graphs as necessary to show results and methodology used to determine the storage facility volumes. Runoff model documentation files should be included. See D3-02 for a list of approved models.

G Present an analysis of existing downstream conveyance system capacity if additional flow is being routed to that system.

H Present an analysis and design of the proposed stormwater conveyance system for the project, using an approved model. All pipes, culverts, catch basins, channels, swales, and other stormwater conveyance appurtenances must be clearly labeled and correspond directly to the engineering plans.

7) Permanent Stormwater Control Plan

A Show on-site stormwater management facilities on the site plan, as required on Development Services Submittal Requirements sheets for single family residential or commercial sites.

B Include sufficient profiles and details needed for review, for the Contractor to construct the facilities, and for the City inspector to verify them.

C If a Utility Developer Extension Agreement is required for water or sewer as well as storm drainage facilities, plans for the drainage facilities may be combined with water and sewer if they remain readable.

As-Built drawings must be submitted following inspection, prior to occupancy, and approved by the City.

Operation and Maintenance Manual (O & M Manual) for Stormwater Management Facilities per Section D2-09.

D2-07 PLAN FORMAT AND NOTES

D2-07.1 Submittal Standards

1) Submittal Standards vary by size and type of project. Refer to handouts provided by City of Bellevue Development Services for Submittal Requirements. Utility plans submitted for review shall meet the City's "Boundary & Topographic Survey" and "Site Plan B" requirements. Current copies of these requirements are available at the Bellevue Development Services Center and the City’s website.

2) Combining Plans - Water, sanitary sewer and storm drainage designs (complete plan and profile) shall be on separate plan sheets, although alignments of all Utilities shall be shown on each utility plan. Plan sets for all 3 Utilities can be combined for small projects if information is readable. Designs for water and sewer can be combined on the same plan sheets if plan scale is 1”=10’, V=20’, or 1’"=30’. Contact the Utility representative in the Permit Center for approval to combine plans.

3) Plan submittals shall conform to Development Services "Standards for Plans and Drawings", and also include:

4) Title Block - Border and title block shall conform to standard City of Bellevue format. See Appendix D-2.

5) Project Name Utility Extension (UE) permit number if applicable, Section - Township - Range, and Site Address shall be included in title block (lower right hand corner).

6) Engineering Plans - Plan, profile and detail sheet(s) for the proposed drainage system.

   a) Plan View

      i) List pipe length, size and material alongside of pipe, e.g. 150 L.F. - 8" PVC. Pipe material can be listed in a general note in lieu of listing along pipe.

      ii) Pipe length is to be based on horizontal distance between center of manholes.

      iii) Indicate direction of flow with arrows on end of pipe entering manhole.

   b) <u>Profile View</u>

      i) List pipe length, size, material and slope to 4 decimal places (ft per ft), e.g. 150 L.F. - 8" PVC S=0.0125. Pipe material can be listed in a plan note in lieu of listing on profile.

      ii) Slope is based on invert elevation OUT of upstream manhole, invert elevation INTO downstream manhole and horizontal distance between center of manholes.

7) Site Areas - Total area, Existing and Proposed Pervious and Impervious areas, areas within Native Growth Protection Easements (NGPE), etc. on the drainage plan sheet(s).

8) Hydrologic and Hydraulic Data - Design volumes and allowable release/ discharge rates for flow control and runoff treatment facilities shall be tabulated on the plans. Provide space for as-built volume and release rates.

9) Scale - Be consistent and indicate your scale on each sheet using a bar symbol (for Plan reproduction integrity). Drawings are to be in a scale of 1" = 10', 1" = 20' or 1" = 30' for combined utility plans. Drawings at 1" = 40' or 1" = 50' scale shall show utility plans on separate sheets. Architectural scales for utility drawings will not be

accepted. If the scale results in more than three pages of plan sheets, a cover sheet showing the entire project site (at a smaller scale) shall be provided.

10) North Arrow - Include on all plan view drawings. North arrow shall face up and/or to the right hand side of plan sheet.

11) Datum - Show both horizontal (NAD-83) (NSRS 2011) and vertical (NAVD 88) control points. Specify the benchmark to be used for vertical control during construction. For sites with FEMA-mapped floodplains, label the 100-year floodplain elevation with the NGVD29 and NAVD88 values.

12) The survey of the site, for both design and as-builting, shall be accurately referenced to the Washington State Plane Coordinate System (NAD-83) (NSRS 2011) by field ties to at least two City of Bellevue survey control network monuments. All elevations shall be referenced to the North American Vertical Datum of 1988 (NAVD 88). Information on the City of Bellevue survey control network is available by contacting the Transportation Department, Property Services Division, at (425) 452-6019.

13) Vicinity Map - Include on the plan for each utility. The vicinity map covers the project site and surrounding streets and property within a minimum of 600' of the site. Copies of a city map can be made from the Street Atlas in the Self Help area of the Permit Center.

14) Line types shall clearly distinguish existing utilities from new; new facilities should be a heavier line type.

15) Drafting Media - Plans sheets shall be on 24" x 36" or 22" x 34" mylar, matte on both sides.

16) Drafting Standards - Plotting shall be on mylar with a non-smudging, ink or ink-like media. Pencil drawings (including corrections or alterations) shall not be accepted.

17) Drafting standards/symbols shall conform to Washington State APWA Chapter CAD Standards. See Appendix D-3. Lettering shall be done with "Leroy-style" font (SIMPLEX font if using AutoCAD).

18) Text identifying existing features shall be 0.08" in height (Leroy 80 template).

19) Text identifying street names shall be 0.24" in height (Leroy 240 template).

20) Text for instructions and call outs for proposed facilities shall be 0. 12" in height (Leroy 120 template).

21) On plans with more than one sheet, stationing shall proceed from left to right or from bottom to top.

22) Upon completion of construction, as-builts shall be provided in digital format for as-builting and permanent record. The digital format shall be in AutoCAD Version 2004 through 2011 (no older or newer). The "DWG" file(s) on a CD ROM. The AutoCAD' files shall include all plans, profiles, notes, and details of the surface water improvements.

23) Making Copies of Plans - Blueline or blackline prints and photocopies are acceptable. Brownline prints and microfilm copies of plans will not be accepted.

24) Type of Paper for Plan Copies - Blueprint quality or standard drafting paper. Tissue paper, graph paper, poster board, cardboard, and similar materials will not be accepted.

D2-07.2 Storm Drainage General Plan Notes

The following is a listing of General Notes that should be incorporated in the drainage plan set. All the notes on the list may not pertain to every project. The Developer may omit non-relevant notes as determined by the Utility. However, do not renumber the remaining General Notes. If additional notes are needed for specific aspects, they should be added after the General Notes.

Storm Drainage General Notes:

(1) All work shall conform to the 2013 edition of the City of Bellevue Utilities Department Engineering Standards and the Developer Extension Agreement.

(2) Storm pipe shall be PVC conforming to ASTM D-3034 SDR 35 (4” – 15”) or ASTM F-679 (18”-27”). Bedding and backfill shall be as shown in the Standard Details.

(3) The locations of all existing utilities shown hereon have been established by field survey or obtained from available records and should therefore be considered approximate only and not necessarily complete. It is the sole responsibility of the excavator to independently verify the accuracy of all utility locations shown, and to further discover and avoid any other utilities not shown here on which may be affected by the implementation of this plan. Immediately notify the Engineer if a conflict exists.

(4) The footing drainage system and the roof downspout system shall not be interconnected and shall separately convey collected flows to the conveyance system or to on-site stormwater facilities.

(5) Provide and maintain temporary sedimentation collection facilities to ensure that sediment or other hazardous materials do not enter the storm drainage system in accordance with the sites approved CSWPPP. For all construction during the rainy season, downhill basins and inlets must be protected with catch basin inserts. Simply placing filter fabric under the grate is not acceptable.

(6) Prior to final inspection and acceptance of storm drainage work, pipes and storm drain structures shall be cleaned and flushed. Any obstructions to flow within the storm drain system, (such as rubble, mortar and wedged debris), shall be removed at the nearest structure. Wash water of any sort shall not be discharged to the storm drain system or surface waters.

(7) Ends of each storm drain stub at the property line shall be capped and located with an 8' long 2" x 4" board, embedded to the stub cap and extending at least 3 feet above grade, and marked permanently "STORM". A copper 12 ga. locate wire firmly attached. The stub depth shall be indicated on the marker.

(8) All grates in roadways shall be ductile iron, bolt-locking, vaned grates per the Standard Details. Structures in traffic lanes outside of the curbline which do not collect runoff shall be fitted with round, bolt-locking solid covers. Off-street structures which do not collect runoff shall be fitted with bolt-locking solid covers.

(9) Vegetation/landscaping in the detention pond, bioretention facility, vegetated roof and/or drainage swale(s) are an integral part of the runoff treatment system for the project. Such drainage facilities will not be accepted until plantings are established.

(10) All new manholes shall have a minimum inside diameter of 48” and shall conform to the Standard Details. All new catch basins shall conform to the Standard Details.

(11) Side storm stations are referenced from nearest downstream manhole/ catch basin.

(12) All testing and connections to existing mains shall be done in the presence of a representative of the City of Bellevue Utilities Department.

(13) All trenches shall be compacted, and Hot Mix Asphalt in place in paved areas, prior to testing storm lines for acceptance.

(14) All public storm drains shall be air tested and have a video inspection performed prior to acceptance (see #23 below). Storm main constructed with flexible pipe shall be deflection tested with a mandrel prior to acceptance.

(15) Storm stubs shall be tested for acceptance at the same time the main storm is tested.

(16) All manholes/ catch basins in unpaved areas shall include a concrete seal around adjustment rings per Standard Details.

(17) All storm main extensions within the public right-of-way or in easements must be "staked" by a surveyor licensed in Washington State for "line and grade" and cut sheets provided to the Engineer, prior to starting construction.

(18) The Contractor shall use a vacuum street sweeper to remove dust and debris from pavement areas as directed by the Engineer. Flushing of streets shall not be permitted without prior City approval.

(19) Storm drainage mainlines, stubs and fittings shall be constructed using the same pipe material and manufacturer. Connections between stubs and the mainline will be made with a tee fitting. Tee fitting shall be from same manufacturer as pipe. Cut-in connections are only allowed when connecting a new stub to an existing mainline.

(20) Manholes, catch basins and vaults are considered to be permit-required confined spaces. Entry into these spaces shall be in accordance with Chapter 296-809 WAC.

(21) Placement of surface appurtenances (MH lids, valve lids, etc.) in tire tracks of traffic lanes shall be avoided whenever possible.

(22) Call 1-800-424-5555, or 8-1-1, 72 hours before construction for utility locates.

(23) The Contractor shall perform a video inspection and provide a DVD of the storm pipe interior for the City's review. The video shall provide a minimum of 14 lines per millimeter resolution and cover the entire length of the applicable pipe. The camera shall be moved through the pipe at a uniform rate (≤ 30 ft/min), stopping when necessary to ensure proper documentation of the pipe condition. The video shall be taken after installation and cleaning to insure that no defects exist. The project will not be accepted until all defects have been repaired.

(24) Clearly label public and private systems on the plans. Private systems shall be marked "private" and shall be maintained by the property owner(s).

(25) All concrete structures (vaults, catch basins, manholes, oil/water separators, etc.) shall be vacuum tested.

(26) Manholes, catch basins and inlets in easements shall be constructed to provide a stable, level grade for a minimum radius of 2.5 feet around the center of the access opening to accommodate confined space entry equipment.

(27) Tops of manholes/ catch basins within public right-of-way shall not be adjusted to final grade until after paving.

(28) Contractor shall adjust all manhole/ catch basin rims to flush with final finished grades, unless otherwise shown.

(29) Contractor shall install, at all connections to existing downstream manholes/catch basins, screens or plugs to prevent foreign materials from entering existing storm drainage system. Screens or plugs shall remain in place throughout the duration of the construction and shall be removed along with collected debris at the time of final inspection and in the presence of a representative of the City of Bellevue Utilities Department.

(30) Surface restoration of existing asphalt pavement shall be as required by the right-of-way use permit.

(31) The Contractor shall maintain a minimum of five feet (5') horizontal separation between all water and storm drainage lines. Any conflict shall be reported to the Utility and the Developer's Engineer prior to construction.

(32) It shall be the Contractor's responsibility to ensure that no conflicts exist between storm drainage lines and proposed or existing utilities prior to construction.

(33) Before commencement of trenching, the Contractor shall provide filter fabric for all downhill storm drain inlets and catch basins, which will receive runoff from the project site. The contractor shall periodically inspect the condition of all filter fabric and replace as necessary.

(34) Minimum cover over storm drainage pipe shall be 2 feet, unless otherwise shown.

(35) Avoid crossing water or sewer mains at highly acute angles. The smallest angle measure between utilities should be 45 degrees.

(36) At points where existing thrust blocking is found, minimum clearance between concrete blocking and other buried utilities or structures shall be 5 feet.

(37) When work is to occur in easements, the Contractor shall notify the easement grantor and Bellevue Utilities in writing a minimum of 48 hours in advance of beginning work (not including weekends or holidays). Failure to notify grantor and Bellevue Utilities will result in a Stop Work Order being posted until the matter is resolved to the satisfaction of Bellevue Utilities. A written release from the easement grantor shall be furnished to the Utilities Inspector prior to permit sign-off.

(38) The Contractor shall restore the Right-of-Way and existing public storm drainage easement(s) after construction to a condition equal or better than condition prior to entry. The Contractor shall furnish a signed release from all affected property owners after restoration has been completed.

(39) Where a new utility line crosses below an existing AC main, the AC pipe shall be replaced with DI pipe to 3 feet past each side of the trench as shown on Standard Detail W-8. Alternatively, where directed by the Utility, the trench shall be backfilled with controlled density fill (CDF, aka flowable fill) from bottom of trench to bottom of AC main.

D2-08 AS-BUILT DOCUMENTATION

D2-08.1 General Standards

For all storm drainage projects, the Developer or City Department responsible for the project shall provide surveyed as-built plans at completion of the project. This includes private commercial or multi-family systems that the Developer's Engineer provides a written compliance letter for.

As-built plans shall be based on field survey information. All survey work shall be performed under the supervision of a Professional Land Surveyor registered in the State of Washington. The surveyed as-built shall contain the following information submitted in both electronic (AutoCAD) format and on a mylar plan stamped and signed by the surveyor. Horizontal locations shall be recorded to within one tenth (0.1') of a foot. Rim and invert elevations at drainage structures shall be recorded to within one one-hundredth (0.01') of a foot. Use Washington Coordinate System NAD 83 (NSRS 2011) – North Zone as the basis of bearings for all surveys. Prepare survey according to City of Bellevue NAVD 1988 vertical datum and state that it was the datum used.

All pipe lengths and dimensions are based on horizontal distances, unless slope is greater than 10%, to measure horizontal distance, inspector should note that length is "slope distance".

References/dimensions from right-of-way centerline for utility features in the public right-of-way, or from property line for utility features located within easements.

As-built information shall be recorded on plan and profile views of the contract drawings. The profile view shall note any changes from the design finished grade over each pipe line.

As-built plans shall be submitted to Bellevue Utilities using the approved mylar plan set as the basis for the redlined as-built plans. An as-built plan set in digital format shall also be submitted. The digital format shall be in AutoCAD Version 2004 through 2011 (no older or newer). The "DWG" file(s) shall be submitted on CD ROM.

The Developer will perform as-built documentation for Storm Drainage projects.

D2-08.2 Required Information

Mains:

Length (center of manhole/catch basin to center of manhole/catch basin), diameter, material, slope, direction of flow, note "private" if applicable, for privately maintained facilities. Show private systems going to apartments, condominiums, commercial sites, and joint-use side storm drains. Label private system components as "PRIVATE SYSTEM". Other than joint-use systems, do not show single family private systems, other than stub from public main.

Ditches:

Length, direction of flow, material and slope of all constructed open channels, note "private" if applicable.

Stubs:

Lengths, depth, station (stationing of stubs referenced from downstream structure), distance from property line. List slope if different than standard 2% and size if different than standard 6".

Existing Structures:

Where new pipes connect to existing structures, the Utilities ID number of the existing structure shall be noted on the drawing. ID numbers can be obtained from the Storm Drainage Maps.

Ponds, Bioswales, and Bioretention Facilities:

- Locations, topographic features and dimensions of all flow control and runoff treatment ponds, bioswales and bioretention facilities. Include bottom and top elevations, and in plan view included labeled contour lines at one-foot 1intervals.
- As-built revisions to any detail drawings that provide information associated with ponds and bioswales, such as cross-sections, pond or bioswale lining material specifications (e.g. grass, plantings, etc.), plan or profile views, spillway elevation, etc.
- Location, type, size and elevation at tops, inverts and bottoms of any drainage system facilities adjacent to each pond, such as control structures, catch basins, etc.
- Dimensions from Right-of-Way centerline or property line.
- Notes and details about unusual situations and features.
- Plant details including the type of plant.

For private storm drainage systems (collection, runoff control, and water quality treatment), the Developer's Engineer shall submit a compliance letter, on a form furnished by the Utilities Department, for constructed the storm drain facilities.

Single Family Private Systems, including MR5 facilities (on-site stormwater management) on individual lots:

> Use the approved storm design as shown on the building permit site plan as the basis for the as-built. Make revisions as necessary to reflect field changes. The changes need not be drafted (e.g. they can be edits marked on the site plan), but they must be readable.

D2 - 09 OPERATION AND MAINTENANCE MANUAL

A storm drainage operation and maintenance manual (O & M Manual) agreement shall be provided for all constructed source controls, on-site stormwater management, flow control, and treatment facilities that are owned, operated, and maintained by private parties, as well as City Parks Department and Civic Services Facilities. For projects triggering Minimum Requirements 1 through 5, the Storm Drainage O&M Manual Agreement for Utilities Storm Connections (MR 1-5) shall be provided. For projects triggering Minimum Requirements 1 through 9, the Storm Drainage O&M Manual Agreement for Utility Extension Agreements (MR1-9) shall be provided.

Public drainage facilities, located in the public right-of-way and in dedicated easements, which are accepted by the City of Bellevue Storm and Surface Water Utility are operated and maintained as per the current edition of the City of Bellevue Storm and Surface Water Maintenance Standards, now or as hereafter amended. Individual O&M Manuals are not provided for these public drainage facilities. City Parks Department and Civic Services are required to provide an O&M Manual agreement.

D2-09.1 Storm Drainage O&M Manual Agreement for Utilities Storm Connections (MR 1-5)

The Storm Drainage O&M Manual Agreement for Utilities Storm Connections (MR 1-5), at a minimum, shall include:

- The name of the property owner(s) responsible for maintenance and operation of the system.
- The property address.
- The Storm Connection Permit (UB Permit) number and issue date project is permitted under.
- The on-site stormwater management facility types permitted.

- Site diagram of the constructed (As-Built) storm drainage system, identifying the components, with profiles as needed.
- Agreement to maintain facilities in accordance with City of Bellevue Storm and Surface Water Code (24.06.065) and the Storm and Surface Water Maintenance Standards, now or as hereafter amended.

The final O&M Manual for MR 1-5 must be submitted and approved by the Utilities Department prior to the Storm Connection Permit acceptance, where applicable, or prior to occupancy. The O & M Manual for MR 1-5 must conform to King County's recording format requirements and be recorded against the property, as a covenant running with the land.

A copy of the manual shall be retained onsite or within reasonable access to the site, and shall be transferred with the property to the new owner.

D2-09.2 Storm Drainage O&M Manual Agreement for Utilities Extension Agreements (MR 1-9)

The Storm Drainage O&M Manual Agreement for Utilities Extension Agreements (MR 1-9), at a minimum, shall include:

- The name of the party (or parties) responsible for maintenance and operation of the system, such as a Home Owners association, management company or the legal property owner.
- Property legal description, address and project name, if applicable.
- Agreement to maintain facilities in accordance with City of Bellevue Storm and Surface Water Code (24.06.065) and the Storm and Surface Water Maintenance Standards, now or as hereafter amended.
- A log of maintenance activities that indicates what actions have been taken, when and by whom. Log shall be kept available for inspection by City of Bellevue at any time. See Figure 2.4 below for recommended activity log format.
- Prominently note the manual and log sheets location on site.
- Maintenance instructions for any components not covered by the maintenance standards referenced above.
- An engineer's statement describing the storm drainage facilities and overall system, and how it is intended to function.
- Site diagram of the constructed (As-Built) storm drainage system, identifying the components, with profiles as needed.

- As-Built details of components, particularly flow control and treatment facilities, as needed for maintenance.

A draft must be submitted to the Utilities Department during the plan review process. The final O&M Manual for MR 1-9 must be approved by the Utilities prior to Utility Extension acceptance, where applicable, or prior to occupancy. The O & M Manual for MR 1-9 must conform to King County's recording format requirements and be recorded against the property, as a covenant running with the land.

A copy of the manual shall be retained onsite or within reasonable access to the site, and shall be transferred with the property to the new owner. The manual and log sheets must be available for inspection by the City of Bellevue upon request.

The O&M Manual for MR 1-9 shall be adjusted or revised at the end of the one (1) year warranty period, if needed, as a result of inspection findings and recommendations by the City. The revised O & M Manual shall be recorded against the property.

List regularly scheduled maintenance on a separate checklist based on the facility's O&M Manual for MR 1-9, and keep the checklist with this maintenance activity log.

A sample "Maintenance Activity Log" is shown in Figure 2.4.

Figure 2.4 - Sample Stormwater Facility Maintenance Activity Log for NPDES Permit

To be completed and provided to the City of Bellevue annually.

Send copy by fax to: 425-452-7116, or by mail to: Bellevue Utilities, Water Quality, P.O. Box 90012, Bellevue, WA 98009.

Property Name/Owner:	Site Address:
Property Manager/Contact:	Phone:
Storm Drainage Facility Type(s):	Location(s) on Property: (*indicate on site map if possible*)

Date	Reason for Inspection/Action (circle one)	Condition Observed	Action Taken	Initials
	Complaint or Problem Regular Maintenance			
	Complaint or Problem Regular Maintenance			
	Complaint or Problem Regular Maintenance			
	Complaint or Problem Regular Maintenance			
	Complaint or Problem Regular Maintenance			
	Complaint or Problem Regular Maintenance			
	Complaint or Problem Regular Maintenance			

END OF CHAPTER D2

CHAPTER D3 - HYDROLOGIC ANALYSIS

TABLE OF CONTENTS

D3-01 GENERAL D3-1
D3-02 HYDROLOGIC MODELS D3-1
D3-02.01 Ecology Approved Continuous Simulation Hydrology Model D3-2
D3-02.02 Single Event Hydrograph Method D3-3
D3-02.03 Rational Method D3-11
D3-03 SUMMARY OF DESIGN FLOW D3-14
D3-04 MINIMUM IMPERVIOUS AREAS D3-15
D3-05 FLOW CONTROL EXEMPTIONS D3-16
D3-06 SOIL TYPES D3-17

LIST OF TABLES

Table 3.1 Acceptable Uses of Runoff Computation Methods D3-2
Table 3.2 24 Hour Design Storm Hyetograph Values D3-4
Table 3.3 Runoff Coefficients - "C" Values For The Rational Method D3-12
Table 3.4 Coefficients For The Rational Method “Ir" - Equation D3-12
Table 3.5 k_R Values For T_t Using The Rational Method D3-14
Table 3.6 Hydrologic Soil Groups for Soils in the Puget Sound Basin D3-17

LIST OF FIGURES

Figure 3.1 2-Year 24-Hour Precipitation D3-8
Figure 3.2 10-Year 24-Hour Precipitation D3-9
Figure 3.3 100-Year 24-Hour Precipitation D3-10

CHAPTER D3 - HYDROLOGIC ANALYSIS

D3-01 GENERAL

Hydrologic analysis is used to size conveyance, determine flow control levels and size water quality treatment facilities. This chapter describes the models and methods of analyses required or allowed by the City.

D3-02 HYDROLOGIC MODELS

Various hydrologic models and methods assist in the planning and design of stormwater conveyance, flow control and water quality treatment. Table 3.1 below lists the models and methods approved for use.

D3-02.01 Ecology Approved Continuous Simulation Hydrology Model

Table 3.1 Acceptable Uses of Runoff Computation Methods

TYPE OF COMPUTATION	Allowed For	Rational Method	Single Hydrograph Method	Ecology Approved Continuous Simulation Model
PEAK FLOW CONVEYANCE SIZING (DESIGN FLOWS)	Tributary Areas < 10 ac (measured to individual conveyance elements)	REQUIRED for un-detained areas,(1) OKAY for detained areas if no storage routing is performed	OKAY if no storage routing is performed.	OKAY if majority of tributary area is detained(2) and 15-minute time steps (3) are used.
	Tributary Areas >= 10 ac	OKAY if no storage routing is performed	OKAY if no storage routing is performed	OKAY if using 15-minute time steps (3) (storage routing is allowed)
FLOW CONTROL (NEW/EXISTING) & WQ FACILITY SIZING AND ANALYSIS	Projects requiring Water Quality (MR #6) and Flow Control (MR #7)			OKAY (must use 1-hour time steps)
DOWNSTREAM ANALYSIS	All Projects	OKAY if no storage routing is needed. 100-yr rainfall.	OKAY for tributary areas >= 10 acre if no storage routing is needed. 100-year, 24 hr.	OKAY if using 15-minute time steps (3)
PEAK FLOWS FOR APPLYING EXEMPTIONS & THRESHOLDS	All Projects			OKAY (must use 1-hour time steps)
ON SITE STORMWATER MANAGEMENT	All Projects			Apply Default(4) LID Credits or derive LID Credits with demonstrative(5) modeling

Notes:

(1) Undetained areas are those upstream of flow control facilities or other storage features.

(2) The majority of the tributary area is considered detained if the runoff from more than 50% of the tributary area is detained by a flow control or other storage facility.

(3) The 15-minute time step references a computational time step best used with a rainfall time series that is dissagregated to a comparable time step. King County maintains a 15-minute rainfall data base that was created by disaggregating the historical hourly record. MGSFlood has developed a long-term, 5-minute dissagregated rainfall time series.

(4) Default LID credits available in Appenidx III-C of Volume 3 of the DOE Manual.

(5) Requires use of proprietary modeling software that includes approved LID modeling approaches or applicaion of HSPF incorporating modeling techniquesappropriate for characterizing LID

The Western Washington Hydrologic Model (WWHM) has been developed to aid in the design of stormwater mitigation as required by Ecology. There are other HSPF derivatives that Ecology has approved, including the King County Runoff Time Series model (KCRTS) and the MGSFlood model. All incorporate HSPF algorithims or HSPF generated time series and should

produce comparable results provided they are using the same HSPF parameters and are using similar rainfall records. The City of Bellevue accepts Ecology approved models.

Some HSPF- based models incorporate rainfall time series that have been dissaggregated to a smaller time step that is more appropriate to use in sizing conveyance. Included are the KCRTS model and version 4 of the MGSFlood model. The City will not accept 15 minute rainfall that has not been disaggregated.

D3-02.02 Single Event Hydrograph Method

The Single Event Hydrograph Method (SBUH, NRSC or TR-55) is presented in Volume III Chapter 2 of the DOE Manual. The design storm for all hydrograph analyses is a 24-hour duration, standard SCS Type I A rainfall distribution resolved to 10-minute time intervals (Table 3.2 herein). See Figures 3.1 through 3.3 herein for the Bellevue 24-hour precipitation isopluvials.

Table 3.2 24 Hour Design Storm Hyetograph Values

Time from Beginning of Storm	Percent Rainfall	Cumulative Percent Rainfall
0	0.00	0.00
10	0.40	0.40
20	0.40	0.80
30	0.40	1.20
40	0.40	1.60
50	0.40	2.00
60	0.40	2.40
70	0.40	2.80
80	0.40	3.20
90	0.40	3.60
100	0.40	4.00
110	0.50	4.50
120	0.50	5.00
130	0.50	5.50
140	0.50	6.00
150	0.50	6.50
160	0.50	7.00
170	0.60	7.60
180	0.60	8.20
190	0.60	8.80
200	0.60	9.40
210	0.60	10.00
220	0.60	10.60
230	0.70	11.30
240	0.70	12.00
250	0.70	12.70
260	0.70	13.40
270	0.70	14.10
280	0.70	14.80
290	0.82	15.62
300	0.82	16.44
310	0.82	17.26
320	0.82	18.08
330	0.82	18.90
340	0.82	19.72
350	0.95	20.67
360	0.95	21.62
370	0.95	22.57
380	0.95	23.52
390	0.95	24.47
400	0.95	25.42
410	1.34	26.76
420	1.34	28.10
430	1.34	29.44

TABLE 3.2 24 Hour Design Storm Hyetograph Values (Cont.)		
Time from Beginning of Storm	**Percent Rainfall**	**Cumulative Percent Rainfall**
440	1.80	31.24
450	1.80	33.04
460	3.40	36.44
470	5.40	41.84
480	2.70	44.54
490	1.80	46.34
500	1.34	47.68
510	1.34	49.02
520	1.34	50.36
530	0.88	51.24
540	0.88	52.12
550	0.88	53.00
560	0.88	53.88
570	0.88	54.76
580	0.88	55.64
590	0.88	56.52
600	0.88	57.40
610	0.88	58.28
620	0.88	59.16
630	0.88	60.04
640	0.88	60.92
650	0.72	61.64
660	0.72	62.36
670	0.72	63.08
680	0.72	63.80
690	0.72	64.52
700	0.72	65.24
710	0.72	65.96
720	0.72	66.68
730	0.72	67.40
740	0.72	68.12
750	0.72	68.84
760	0.72	69.56
770	0.57	70.13
780	0.57	70.70
790	0.57	71.27
800	0.57	71.84
810	0.57	72.41
820	0.57	72.98
830	0.57	73.55
840	0.57	74.12
850	0.57	74.69
860	0.57	75.26
870	0.57	75.83

TABLE 3.2 24 Hour Design Storm Hyetograph Values (Cont.)		
Time from Beginning of Storm	**Percent Rainfall**	**Cumulative Percent Rainfall**
880	0.57	76.40
890	0.50	76.90
900	0.50	77.40
910	0.50	77.90
920	0.50	78.40
930	0.50	78.90
940	0.50	79.40
950	0.50	79.90
960	0.50	80.40
970	0.50	80.90
980	0.50	81.40
990	0.50	81.90
1000	0.50	82.40
1010	0.40	82.80
1020	0.40	83.20
1030	0.40	83.60
1040	0.40	84.00
1050	0.40	84.40
1060	0.40	84.80
1070	0.40	85.20
1080	0.40	85.60
1090	0.40	86.00
1100	0.40	86.40
1110	0.40	86.80
1120	0.40	87.20
1130	0.40	87.60
1140	0.40	88.00
1150	0.40	88.40
1160	0.40	88.80
1170	0.40	89.20
1180	0.40	89.60
1190	0.40	90.00
1200	0.40	90.40
1210	0.40	90.80
1220	0.40	91.20
1230	0.40	91.60
1240	0.40	92.00
1250	0.40	92.40
1260	0.40	92.80
1270	0.40	93.20
1280	0.40	93.60
1290	0.40	94.00
1300	0.40	94.40

TABLE 3.2 24 Hour Design Storm Hyetograph Values (Cont.)		
Time from Beginning of Storm	**Percent Rainfall**	**Cumulative Percent Rainfall**
1310	0.40	94.80
1320	0.40	95.20
1330	0.40	95.60
1340	0.40	96.00
1350	0.40	96.40
1360	0.40	96.80
1370	0.40	97.20
1380	0.40	97.60
1390	0.40	98.00
1400	0.40	98.40
1410	0.40	98.80
1420	0.40	99.20
1430	0.40	99.60
1440	0.40	100.00

*Table III-1.1 24-hour Design Storm Hyetograph Values from Stormwater Management Manual for the Puget Sound, Department of Ecology, 1992

Figure 3.1 2-Year 24-Hour Precipitation

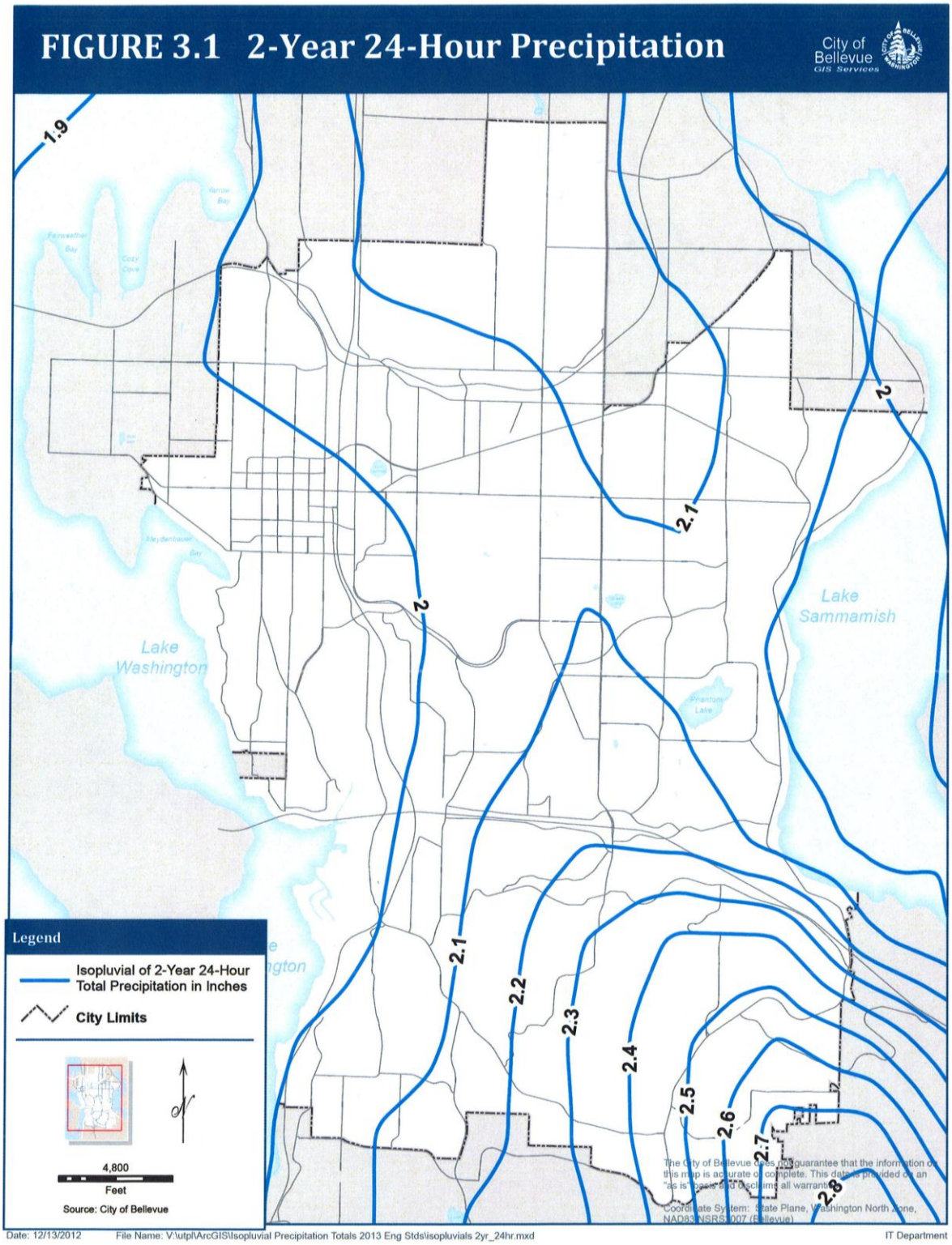

Figure 3.2 10-Year 24-Hour Precipitation

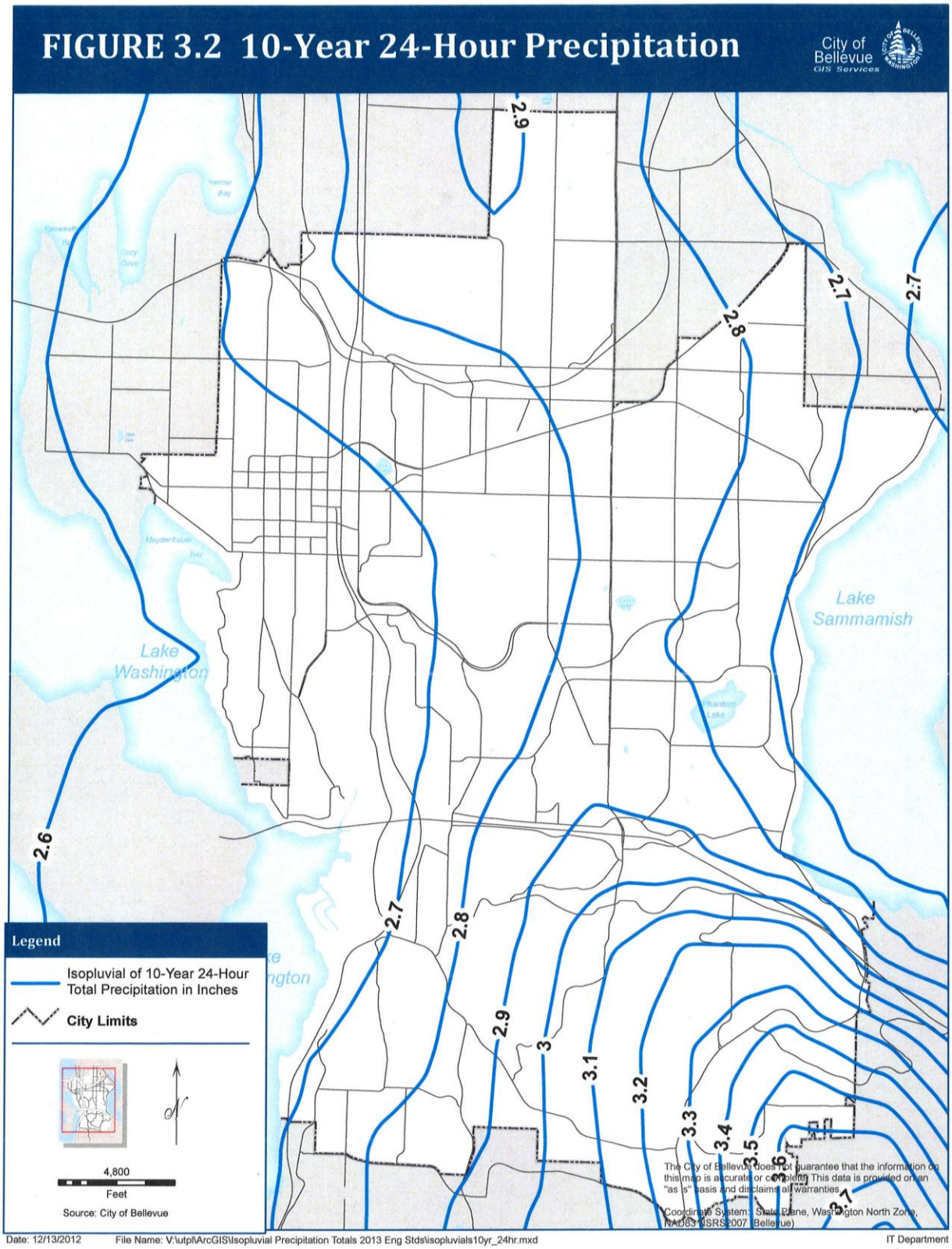

Figure 3.3 100-Year 24-Hour Precipitation

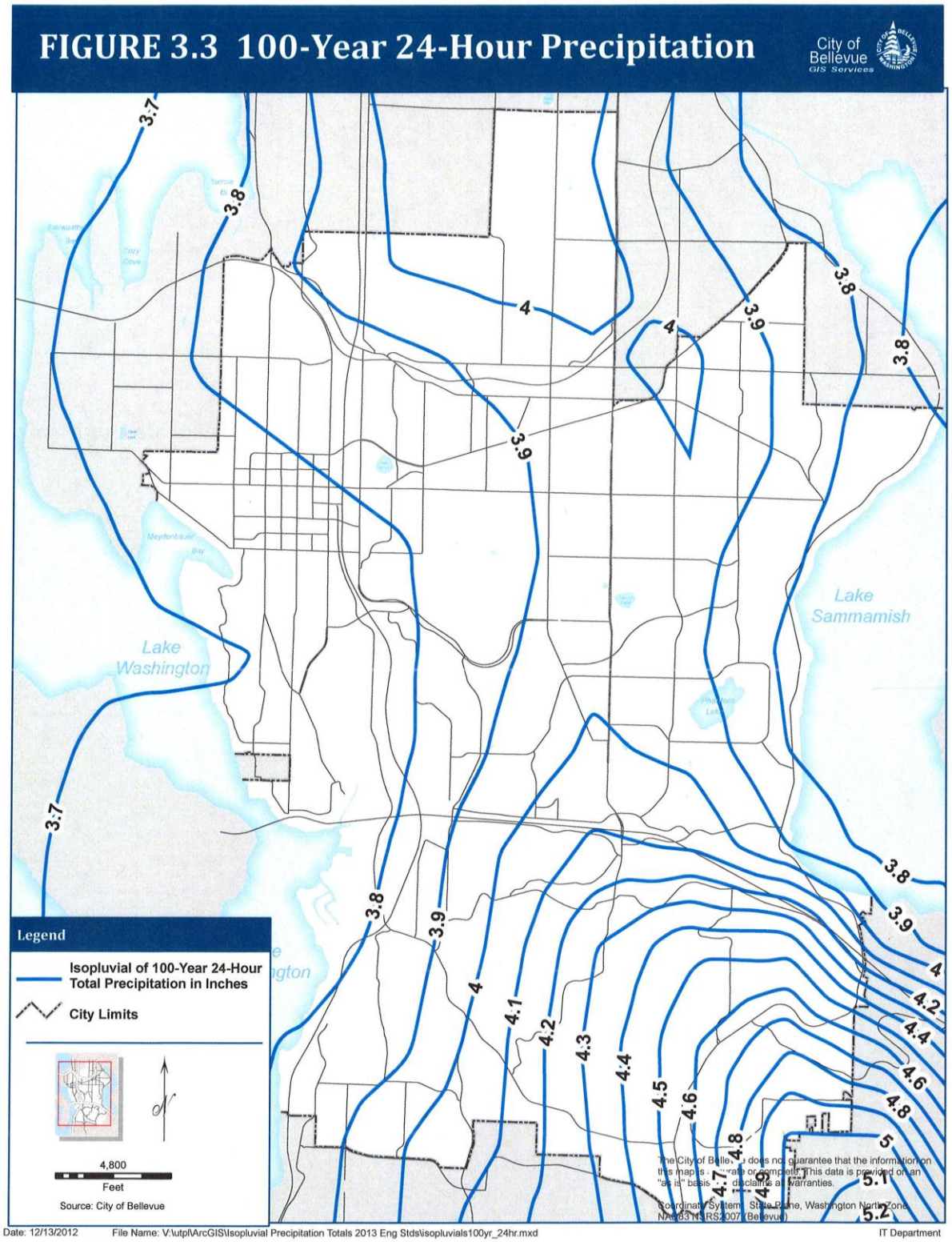

D3-02.03 Rational Method

1) General

The Rational Method may be used with some specific limitations:

- Only for use in predicting a conservative peak flow rate to determine there required capacity for conveyance facilities.
- Drainage sub-basin area (A) shall not exceed 25 acres for a single calculation.
- The time of concentration (Tc) must be computed using the method described below and shall not exceed 100 minutes. It shall be made equal to 6.3 minutes when computed to be less than 6.3 minutes.

2) Equation

The following is the traditional Rational Method equation:

$$Q_R = C*I_R*A$$

Q_R = peak flow (cfs) for a storm of peak rainfall intensity "I_R" of a given return frequency (R)

C = estimated runoff coefficient (ratio of rainfall that becomes runoff)

I_R = peak rainfall intensity (inches/hour) for a given return frequency (R)

A = drainage sub-basin area (acres)

3) "C" Values

The allowable runoff coefficients to be used in this method are shown in Table 3.3 by type of land cover. These values were selected following a review of the values previously acceptable for use in the Rational Method in Bellevue and as described in several engineering handbooks. The values for single family residential areas were computed as composite values (as illustrated below) based on the estimated percentage of coverage by roads, roof, yards and unimproved areas for each density. For drainage basins containing several land cover types, the following formula may be used to compute a composite runoff coefficient "C_C".

$$C_C = ((C_1 \text{ x } A_1) + (C_2 \text{ x } A_2) + \ldots + (C_n \text{ x } A_n)) / A_t$$

where:

A_t = total area (acres)

$A_{1,2,n}$ = areas of land cover types

$C_{1,2,n}$ = runoff coefficients for each area land cover type

Table 3.3 Runoff Coefficients - "C" Values For The Rational Method

GENERAL LAND COVERS

LAND COVER	C	LAND COVER	C
Dense forest	0.10	Playgrounds (non-paved)	0.30
Light forest	0.15	Gravel areas	0.80
Pasture	0.20	Pavement and roofs	0.90
Lawns	0.25	Open water (pond, lakes, wetlands)	1.00

SINGLE FAMILY RESIDENTIAL AREAS
(Density is in dwelling units per gross acreage (DU/GA))

LAND COVER DENSITY	C	LAND COVER DENSITY	C
0.20 DU/GA (1 per 5 ac.)	0.17	3.00 DU/GA	0.42
0.40 DU/GA	0.20	3.50 DU/GA	0.45
0.80 DU/GA	0.27	4.00 DU/GA	0.48
1.00 DU/GA	0.30	4.50 DU/GA	0.51
1.50 DU/GA	0.33	5.00 DU/GA	0.54
2.00 DU/GA	0.36	5.50 DU/GA	0.57
2.50 DU/GA	0.39	6.00 DU/GA	0.60

For land covers not listed above, an area-weighted "C x At" sum should be computed based on the following equation: $C \times A_t, = (C_l \times A_1,) + (C_2 \times A_2) + \ldots + (C_n . X A_n)$, where $A_t, = (A_a, + A_s + \ldots = A_n)$, the total drainage basin area.

* (For use only in determining peak design flow for analyzing and sizing pipes, culverts or channels)

Table 3.4 Coefficients For The Rational Method "Ir" - Equation

DESIGN STORM RETURN FREQUENCY (YEARS)	a_R	b_R
2 year	1.58	0.58
10 year	2.44	0.64
100 year	2.61	0.63

4) "IR" Peak Rainfall Intensity

The peak rainfall intensity(I_R)for the specified return frequency ($_R$) design storm is determined using a unit peak rainfall intensity factor (i_R) for a given return frequency ($_R$) design storm using the following equation: $I_R = (P_r)\ (i_R)$

where:

P_r = is the total precipitation at the project site for the 24-hour duration design storm event for the given return frequency (from the Isopluvial Maps in Figures 3.1 through 3.3.

i_R = $(a_R)(T_C)^{-(b_R)}$; the unit peak rainfall intensity factor

T_C = time of concentration (minutes), calculated using the method described below only (Tc minimum value is 6.3 minutes).

a_R and b_R are coefficients (from Table 3.4) used to adjust the equations for the design storm return frequency ($_R$).

This "'I_R" equation was developed by King County SWM Division staff from equations originally developed by Ron Mayo, P.E. It is based on the original Renton/Seattle Intensity/Duration/Frequency (I.D.F.) curves. Rather than requiring a family of curves for various locations in King County this equation adjusts proportionally the Renton/Seattle I.D.F. curve data by using the 24-hour duration total precipitation isopluvial maps. This adjustment is based on the assumption that the localized geo-climatic conditions that control the total volume of precipitation at a specific location also control the peak intensities proportionally.

Note: T_C must not be less than 6.3 minutes or greater than 100 minutes. On the historic I.D.F. curves the lower limit was set at 5 minutes; 6.3 minutes was selected based on the mathematical limits of the equation coefficients.

5) "TC" Time of Concentration (Rational Method Only)

The time of concentration is defined as the time it takes runoff to travel overland (from the onset of precipitation) from the most hydraulically distant location in the drainage basin to the point of discharge. Note that when the C_C of a drainage basin exceeds 0.60, it may be important to compute the T_C and peak rate of flow from the impervious area separately. The computed peak rate of flow for the impervious surface alone may exceed that for the entire drainage basin using the total drainage basin T_C. The higher of the two peak flow rates shall then be used to size the conveyance facility. The T_C is computed by summation of the travel times(s) (T_t) of overland flow across separate flow path segments defined by the six categories of land cover from the chart published in 1975 by the Soil Conservation Service shown in Table 3.5.

The equation for time of concentration is:

$$Tc = T_1, + T_2 + \ldots + T_n$$

Where:

$T_{1,2,n}$ = consecutive flow path segments of different land cover category or having significant difference in flow path slope

Table 3.5 k_R Values For T_t Using The Rational Method

LAND COVER CATEGORY	k_R
Forest with heavy ground litter and meadow	2.5
Fallow or minimum tillage cultivation	4.7
Short grass pasture and lawns	7.0
Nearly bare ground	10.1
Grassed waterway	15.0
Paved area (sheet flow) and shallow gutter flow	20.0

Travel time for each segment is computed using the following equation:

Tt = L/60V (minutes)

[Note, the T, through an open water body (such as a pond) shall be assumed to be zero with this method.]

where:

L = the distance of flow across a given segment (feet)

V = avg velocity across the land cover (feet/second)

Average velocity (V) is computed using the following equation:

$$V = k_R \sqrt{SO}$$

where:

k_R = time of concentration velocity factor (feet/second) (see Table 3.5)

SO = slope of flow path (feet/feet)

D3-03 SUMMARY OF DESIGN FLOW

When required by Chapter 24.06.065 (G) of the Storm and Surface Water Utility Code, analysis of the following flows for historic (forested), existing and post-development shall be provided to determine flow control and treatment needs.

For water quality design of wet pool treatment facilities, a single event hydrology model or the continuous hydrologic model may be used. For the single-event hydrologic modeling (TR55/SBUH method) the water quality design rates and treatment volumes shall be based on

the 6-month, 24-hour storm which is assumed to be 72 percent of the 2 year storm 24 hours storms as per Chapter 4 of Volume 5 of the DOE Manual (post-developed conditions). For the continuous hydrologic modeling (Ecology approved model for post-developed conditions) the water quality design flow rate shall be based on the rate that would be capable of treating 91 percent of the annual runoff volume.

All other water quality designs must be based on the analysis from a continuous hydrologic model. If treatment is being provided downstream from an engineered flow control facility that is sized in accordance with the default duration-based Ecology standard, the water quality design flow rate shall be the 2-year release from the flow control facility. The water quality treatment volume shall be based on the 91st percentile, 24-hour runoff volume. All shall be determined using the post-developed conditions.

For engineered flow control facilities not within an Ecology approved 40/20 basin (detention), design flows are generated with an Ecology approved continuous hydrologic model. Stormwater discharges from flow control facilities shall match developed discharge durations to historic (forested) durations for the range of pre-developed discharge rates from 50% of the 2-year peak flow up to the full 50-year peak.

For sites within an Ecology approved 40/20 basin stormwater discharges from flow control facilities shall match developed discharge durations to existing conditions durations for the range of pre-developed discharge rates from 50% of the 2-year peak flow up to the full 50-year peak. A comparison of the pre-project and post project flow rates should also be conducted to verify that flow control facilities are required. If the 100-year peak flow rate is increased by less than 0.1 cfs, flow control factilities are not required.

For conveyance sizing, design flows can be generated with a single-event hydrology model, continuous hydrologic model or the rational method. For the single-event hydrology model or the rational method, the design flows is based on the 100-year, 24-hour storm. If using an Ecology approved continuous model, the design flow for conveyance is based on the flow associated with a 100-year return period. Continuous modeling for conveyance must use a 15-minute time step and preferably a rainfall time series that has been disaggregated to a 15-minute or smaller increment. Rainfall based on the historic Seatac record is appropriate for use in Belleuve with a correction factor of 1.065.

For modeling on-site stormwater management, design flows are generated with an Ecology approved continuous hydrology model. When including on-site stormwater management BMPs on a project, credit maybe taken for flows controlled on-site. The credit maybe implemented in modeling efforts through either a default or demonstrative method. The default method uses the default credits provided in Chapter 7 of the LID Manual as modified herein by Section D6-03.1, D6-03.3, and D6-03.4. The implementation of demonstrative credits is outlined in Chapter D6 – On-Site Stormwater Management, Section D6-03.2, Natural Drainage Practices, in these Standards.

D3-04 MINIMUM IMPERVIOUS AREAS

For single family residential plat developments, use Table 2.2 in Volume III of the DOE Manual for minimum values. A higher percent impervious area shall be required if the proposed project land use impervious lot coverage allows a greater impervious area coverage. Stormwater system designs shall take into account maximum future build-out of the proposed development, as

allowed by land use code. For commercial and multi-family residential developments, use actual project values.

Site areas set aside in NGPAs or NGPEs shall be excluded from the gross acreage value used in calculating dwelling units per "gross" acre.

D3-05 FLOW CONTROL EXEMPTIONS

As specified in Chapter 24.06.065 (G)(7) of the Storm and Surface Water Utility Code, flow control is not required for new development or redevelopment projects that discharge directly to Lake Washington, Lake Sammamish or Mercer Slough via a conveyance system meeting the requirements set forth in these Standards. The direct discharge to these water bodies is subject to the following restrictions:

1) Direct discharge to the exempt receiving water does not result in the diversion of drainage from any perennial stream classified as Types 1, 2, 3, or 4 in the State of Washington Interim Water Typing System, or Types “S”, “F”, or “Np” in the Permanent Water Typing System, or from any category I, II, or III wetland; and
2) Flow splitting devices or drainage BMP’s are applied to route natural runoff volumes from the project site to any downstream Type 5 stream or category IV wetland:
   A. Design of flow splitting devices or drainage BMP’s will be based on continuous hydrologic modeling analysis. The design will assure that flows delivered to Type 5 stream reaches will approximate, but in no case exceed, durations ranging from 50% of the 2-year to the 50-year peak flow.
   B. Flow splitting devices or drainage BMP’s that deliver flow to category IV wetlands will also be designed using continuous hydrologic modeling to preserve pre-project wetland hydrologic conditions unless specifically waived or exempted by regulatory agencies with permitting jurisdiction; and
   C. The project site must be drained by a conveyance system that is comprised entirely of manmade conveyance elements (e.g., pipes, ditches, outfall protection, etc.) and extends to the ordinary high water line of the exempt receiving water; and
   D. The conveyance system between the project site and the exempt receiving water shall have sufficient hydraulic capacity to convey 100 yr., 24-hour storm peak discharge from future build-out conditions (under current zoning) of the site, and the existing condition from non-project areas from which runoff is or will be collected; and
   E. Any erodible elements of the manmade conveyance system must be adequately stabilized to prevent erosion under the conditions noted above.
3) The invert elevation of any pipe outfall to Mercer Slough shall match the winter pool elevation of Lake Washington, which is 16.7’ NAVD88. Lake Washington and Mercer Slough have equivalent water surface elevations.

Flow control requirements for all other discharge situations are specified in Chapter 24.06.065 (G)(7).

D3-06 SOIL TYPES

Use site-specific geotechnical information for the project site (when available). If not available, use the Soil Survey – King County Area prepared by the National Resource Conservation Service (formerly Soil Conservation service) to identify the hydrologic soil group. Hydrologic groups for some King County soils have been revised (11/88). Table 2.1 in Volume III of the DOE Manual does not reflect those revisions. Use the revised values presented below:

Table 3.6 Hydrologic Soil Groups for Soils in the Puget Sound Basin

Soil Type	Hydrologic Soil Group
Arents, Alderwood	C
Beausite	C
Buckley	D
Earlmont	D
Indianola	A
Klaus	C
Norma	D
Woodinville	D

END OF CHAPTER D3

CHAPTER D4 - HYDRAULIC ANALYSIS & DESIGN

TABLE OF CONTENTS

D4-01 GENERAL D4-1
D4-02 OUTFALLS AND DISCHARGE LOCATIONS D4-2
D4-02.1 Discharge Location Impacts D4-4
D4-02.2 Unconcentrated Flow D4-4
D4-02.3 Temporary Discharges to the Sanitary Sewer D4-4
D4-03 OFF-SITE CAPACITY ANALYSIS D4-5
D4-03.1 Levels of Analysis D4-5
D4-03.2 Solutions to Identified Drainage Problems D4-6
D4-04 CONVEYANCE SYSTEMS D4-6
D4-04.1 General D4-6
D4-04.2 Conveyance System Setbacks D4-7
D4-04.3 Clearances / Other Utilities D4-7
D4-04.4 Open Channel Design Criteria D4-7
D4-04.5 Floodplain/Floodway Analysis D4-25
D4-04.6 Bridges D4-33
D4-04.7 Culverts D4-33
D4-04.8 Culverts Providing for Fish Passage/Migration D4-47
D4-04.9 Storm Drains D4-49
D4-04.10 Private Drainage Systems D4-62
D4-04.11 Private Single Family Drainage Systems D4-62
D4-04.12 Private Commercial and Multi-Family Drainage Systems D4-64
D4-05 MANHOLES, CATCHBASINS AND INLETS D4-66
D4-05.1 General D4-66
D4-05.2 Spacing Requirements D4-67
D4-05.3 Maintenance Access D4-68
D4-06 FLOW CONTROL D4-68
D4-06.1 General D4-68
D4-06.2 Design Flow Rates D4-69
D4-06.3 Multi-Purpose Use D4-70
D4-06.4 Control Structures D4-70
D4-06.5 Ponds D4-71

D4-06.6 Underground Detention Systems D4-73
D4-06.7 Infiltration Systems D4-75
D4-06.8 Dispersion Systems D4-84
D4-06.9 Non-Gravity Systems (Pumps) D4-84
D4-06.10 Non-Gravity Systems (Pumps) for Properties where 100% Lot Coverage is Allowed by the City's Land Use Code D4-85
D4-07 SETBACK REQUIREMENTS D4-86
D4-07.1 Setback Requirements for Surface Water BMPs D4-86
D4-08 EASEMENT REQUIREMENTS D4-89
D4-08.1 General D4-89
D4-08.2 Easement Documentation Requirements D4-89
D4-08.3 Easement Width Requirements D4-90
D4-08.4 Easement Documentation Requirements D4-90
D4-09 PIPE COVERINGS AND ENCASEMENT D4-90

TABLES

Table 4.1 Rock Protection At Outfalls D4-3
Table 4.2 Channel Protection D4-10
Table 4.3 Values Roughness Coefficient "N" For Open Channels D4-15
Table 4.4 Floodplain/Floodway Study Thresholds And Requirements D4-26
Table 4.5 Datum Correlations D4-32
Table 4.6 Constants For Inlet Control Equations D4-36
Table 4.7 Entrance Loss Coefficients D4-38
Table 4.8 Fish Passage Design Criteria D4-48
Table 4.9 Manning's "N" Values for Pipes D4-51
Table 4.10 Pipe Sizes And Lengths Between Structures D4-67
Table 4.11 Allowable Structures And Pipe Sizes D4-67
Table 4.12 Setback Requirements For Storm Drainage Features D4-86

FIGURES

Figure 4.1 Mean Channel Velocity Vs. Medium Stone Weight (W50) And Equivalent Stone Diameter D4-12

Figure 4.2 Riprap/Filter Example Gradation Curve D4-13
Figure 4.3 Ditches - Common Section..... D4-19
Figure 4.4 Drainage Ditches - Common Sections D4-20
Figure 4.5 Geometric Elements Of Common Sections..... D4-21
Figure 4.6 Open Channel Flow Profile Computation D4-22
Figure 4.7 Direct Step Backwater Method - Example..... D4-23
Figure 4.8 BWCHAN Computer Subroutine – Variable Definitions..... D4-24
Figure 4.9 Inlet/Outlet Control Conditions..... D4-40
Figure 4.10 Headwater Depth For Smooth Interior Pipe Culverts With Inlet Control..... D4-41
Figure 4.11 Headwater Depth For Corrugated Pipe Culverts With Inlet Control D4-42
Figure 4.12 Head For Culverts (Pipe W/"*N*"= 0.012) Flowing Full With Outlet Control..... D4-43
Figure 4. 13 Head For Culverts (Pipe W/"*N*"= 0.024) Flowing Full With Outlet Control.... D4-44
Figure 4. 14 Critical Depth Of Flow For Circular Culverts..... D4-45
Figure 4. 15 Computer Subroutines Bwpipe And Bwculv: Variable Definitions D4-46
Figure 4.16 Nomograph For Sizing Circular Drains Flowing Full..... D4-53
Figure 4.17 Circular Channel Ratios D4-54
Figure 4.18 Backwater Calculation Sheet..... D4-55
Figure 4.19 Backwater Calculation Example D4-57
Figure 4.20 Bend Head Losses In Structures..... D4-58
Figure 4.21 Junction Head Loss In Structures..... D4-59
Figure 4. 22 Rational Method for Conveyance System Analysis and Sizing..... D4-61

CHAPTER D4 - HYDRAULIC ANALYSIS & DESIGN

D4-01 GENERAL

A. Use the criteria set forth in Section 24.06.065 of the Storm and Surface Water Utility Code and the information provided herein to plan, design, and construct stormwater systems and facilities.

B. Design the on-site stormwater system (conveyance, flow control, runoff treatment, and emergency overflow elements) to accommodate runoff from the site and areas tributary to the site to prevent damage and injury. Conveyance systems shall be sized to safely convey the 100-year peak runoff from areas tributary to the site to the discharge location. An emergency overflow for flow control facilities shall be provided which prevents property damage or erosion caused by system failure.

C. Roof and footing drains, yard drains, underdrains, ditches, swales, stormwater conveyance systems, etc. shall be installed to prevent damage or nuisance to adjacent properties and the public right-of-way due to the proposed development.

D. Consider drainage system reliability in terms of layout, specification of materials and methods of installation, and the influence of other activities in the area both during and after construction.

E. Minimize the frequency and difficulty of future maintenance by analyzing potential system failures and failure remedies. Access structures shall be accessible by City-owned maintenance equipment such as 5 CY dump trucks and vactor-type trucks.

F. Visual impact and potential problems such as mosquito breeding, landscaping, odors, etc. shall be addressed.

G. All lengths and dimensions shall be horizontal distances, no slope distances on plans.

H. If working in existing streets, indicate type of pavement restoration required by authority having jurisdiction, or refer to Right-of-way use permit.

I. Dimension existing and new storm drain locations from right-of-way line and/or property line, or label stations and offsets.

J. Check with Utility Reviewer to determine how surrounding development will affect design (e.g. serve to extreme of property if adjacent property has potential for future development).

K. On plans, show existing manholes/ catch basins or give reference distances to existing manholes/ catch basins near project, including manhole/ catch basin number and invert/rim elevations.

L. Check with local jurisdiction for necessary permitting requirements.

M. Existing storm drain lines to be abandoned shall be filled completely with sand, concrete, or controlled density fill; or removed.

N. Manholes connected to lines being abandoned shall be re-channeled with 3,000 psi cement concrete.

O. Storm pipes (side and main lines) shall not be used for the grounding of electrical systems or for the maintenance, integrity or continuity of any grounding attachment or connection.

P. Placement of surface appurtenances (manhole lids, catch basin lids, etc.) in tire track of traffic lanes shall be avoided whenever possible.

Q. Soil nails shall not be installed at or above pipes and shall include a minimum 5 foot clearance if installed below pipes.

R. Clearly label public and private system on plans. Private systems shall be marked "Private" and shall be privately owned and maintained.

D4-02 OUTFALLS AND DISCHARGE LOCATIONS

A. General

Properly designed outfalls are critical to ensuring no adverse impacts occur as the result of concentrated discharges from pipe systems and culverts, both on-site and downstream. Outfall systems include rock splash pads, flow dispersal trenches or other energy dissipaters, and tightline systems. A tightline system is typically a continuous length of pipe used to convey flows down a steep or sensitive slope with appropriate energy dissipation at the discharge end. In general, it is recommended that conveyance systems be designed to reduce velocity above outfalls to the extent feasible.

Design Criteria

At a minimum, all outfalls shall be provided with a rock splash pad appropriately sized for the discharge (see Bellevue Standard Detail NDP-4 and NDP-10 in Chapter D6-05, except as specified below and in Table 4.1:

1. When discharging to an existing ditch, swale, or stream, energy dissipation is required to minimize erosion.
2. The flow dispersal trench shown in Bellevue Standard Detail D-40 shall be used as an outfall only after other on-site BMPs have been determined infeasible due to site conditions per D6. See D6-03.1 for Roof Downspout Dispersion. For outfalls with a velocity at a design flow greater than 10 fps, an engineered energy dissipater shall be required, per Standard detail D-38 or D-60.
3. Tightline systems shall be used when on-site storm water management is not required, or where it is required does not fully mitigate stormwater flows per Chapter D6.
4. Storm drain pipelines shall not be installed above ground.
5. Outfalls shall discharge at the bank-full water surface elevation (2-yr storm) in open channels or streams.
6. Conveyance systems downstream of flow control facilities or treatment facilities shall be designed to prevent backwater conditions in those facilities.
7. The use of pumped systems or backflow preventers shall not be used to prevent flooding due to backwater conditions.

Table 4.1 Rock Protection At Outfalls

Discharge Velocity at Design Flow (fps)		REQUIRED PROTECTION				
Greater than	Less than or equal to	Minimum Dimensions[1]				
		Type	Thickness	Width	Length	Height
0	5	Rock lining[2]	1 foot	Diameter + 6 feet	8 feet or 4 x diameter, whichever is greater	Crown + 1 foot
5	10	Riprap[3]	2 feet	Diameter + 6 feet or 3 x diameter, whichever is greater	12 feet or 4 x diameter, whichever is greater	Crown + 1 foot
10	20	Energy Dissipater Standard Detail D-38 or D-60	As required	As required	As required	Crown + 1 foot
20	N/A	Engineered energy dissipater required				

[1] These sizes assume that erosion is dominated by outfall energy. In many cases sizing will be governed by conditions in the receiving waters.

[2] **Rock lining** shall be quarry spalls with gradation as follows:

Passing 8-inch square sieve:	100%
Passing 3-inch square sieve:	40 to 60% maximum
Passing $^3/_4$-inch square sieve:	0 to 10% maximum

[3] **Riprap** shall be reasonably well graded with gradation as follows:

Maximum stone size:	24 inches (nominal diameter)
Median stone size:	16 inches
Minimum stone size:	4 inches

Note: Riprap sizing governed by side slopes on outlet channel is assumed to be approximately 3:1.

D4-02.1 Discharge Location Impacts

Stormwater runoff from the project shall produce no significant adverse impact to downslope properties and shall discharge to the existing downstream drainage system if on-site stormwater management does not fully mitigate flow.

D4-02.2 Unconcentrated Flow

Where no downstream drainage system exists adjacent to the property and the runoff from the project site was previously unconcentrated flow, on-site stormwater management shall be implemented to the extent feasible. Any remaining runoff shall be connected to the downstream drainage system, which shall be extended to the property line and conveyed across the downstream properties to an approved discharge location. The Developer shall secure drainage easements from the downstream owners and record such easements at the King County Office of Records and Elections prior to drainage plan approval, if necessary.

Where no conveyance system exists at the abutting downstream property line and the natural (existing) discharge is unconcentrated, any runoff concentrated by the proposed project must be discharged as follows:

- If the 100-year peak discharge is less than or equal to 0.2 cfs under existing conditions and will remain less than or equal to 0.2 cfs under developed conditions, then the concentrated runoff may be discharged onto a rock pad or to any other system that serves to disperse flows.
- If the 100-year peak discharge is less than or equal to 0.5 cfs under existing conditions and will remain less than or equal to 0.5cfs under developed conditions, then the concentrated runoff may be discharged through a dispersal trench or other dispersal system provided the applicant can demonstrate that there wil be no significant adverse impact to downhill properties or drainage system.
- If the 100-year peak discharge is greater than 0.5 cfs for either existing or developed conditions, or if a significant adverse impact to downhill properties or drainage systems is likely, then a conveyance system must be provided to convey the concentrated runoff across the downstream properties to an acceptable discharge point. Drainage easements for this conveyance system must be secured from downstream property owners and recorded prior to engineering plan approval.

D4-02.3 Temporary Discharges to the Sanitary Sewer

Surface water runoff into the sanitary sewer system is generally prohibited by the Utility Code.

Unavoidable temporary discharges into the sanitary sewer system must meet with the approval of:

- King County Wastewater Treatment Division, Industrial Waste Program
- The Engineering Division of the Utilities Department; and
- The Operations & Maintenance Division, Water Quality Section, of the Utilities Department

For approved temporary discharges, the Operations & Maintenance Division, Water Quality Section, of the Utilities Department will review for approval the:

- Location of connection to the sanitary sewer,
- Method for the connection and pre-connection requirements, i.e. settling tanks, sump pump, etc.
- Time of discharge
- Duration, rate and volume of the discharge
- Other applicable discharge conditions

Temporary discharges to sewer lakelines are prohibited.

The Developer is responsible for first obtaining permission and a sewer permit for constructed connections from the City prior to requesting a discharge permit from King County Wastewater Treatment Division, Industrial Waste Program.

D4-03 OFF-SITE CAPACITY ANALYSIS

Pursuant to Section 24.06.070(D) of the Storm and Surface Water Utility Code, an offsite capacity analysis is required whenever the location of discharge will be changed by a proposed development or redevelopment. If the rate of discharge will be changed, an analysis may be required.

Different levels of analysis of the drainage system are required, depending on both the location of the project in the basin and the information determined in the Level 1 analysis (described below). When required, a Level 1 analysis must be submitted with the Developer Extension Agreement.

D4-03.1 Levels of Analysis

Level 1 Analysis

Physically inspect the existing on- and off-site drainage system and investigate any known problems. The analysis must extend from the proposed project discharge location to the point downstream where the site runoff would join the existing drainage course.

On a map (minimum USGS 1:24000 Quadrangle Topographic Map) delineate the upstream tributary drainage areas to the site and to the downstream system.

Describe in narrative form observations regarding the makeup and general condition of the drainage system. Include such information as pipe sizes, channel characteristics, and drainage structures.

Specifically, the analysis must identify on the map, and describe in the narrative any evidence of existing or anticipated problems.

Following review of the Level 1 analysis, the City will determine whether the Level 2 analysis is required, based on the evidence of existing or anticipated problems.

Level 2 Analysis

At each existing and/or predicted drainage problem location identified in the Level 1 analysis, develop hydrographs or Rational Method peak flow rates for the 100-year, 24-hour design storm events for the total composite drainage area tributary to that location for existing runoff conditions, excluding the proposed project site runoff.

Determine the capacity of the existing drainage system. Non-survey field data (hand tapes, hand level and rods, etc.) and computations using Manning's equation for normal flow are acceptable for this analysis.

At each existing and/or predicted drainage problem location, compute the proposed project's developed runoff hydrograph. Evaluate impacts of adding the controlled peak runoff from the proposed project site to the peak runoff from the total composite drainage area tributary to these locations.

Additional information may be required to determine that impacts have been adequately mitigated and to verify the capacity of the conveyance system.

D4-03.2 Solutions to Identified Drainage Problems

For any anticipated off-site problem resulting from the development or redevelopment, the Developer must demonstrate that the proposed project has been designed to mitigate the anticipated problem.

As an alternative, the Developer, with approval by the City, may arrange with the owners of the off-site properties to install measures which will correct the existing or mitigate the anticipated problem.

In some cases, existing public drainage system problems may already be scheduled for correction by the City. In these cases, the Developer should contact the Utilities Department to determine current capital improvement project schedules.

Any proposed drainage easements must be executed by the affected property owners and be recorded prior to approval for construction.

D4-04 CONVEYANCE SYSTEMS

D4-04.1 General

Use the criteria set forth in Section 24.06.070(B)(4) of the Storm and Surface Water Utility Code and the information provided herein to plan, design and construct stormwater conveyance systems.

Off-site stormwater flows passing through the site shall be conveyed by a hydraulically adequate conveyance system as set forth herein. Off-site flows can only be routed to flow control or treatment facilities if allowed by D4-06.2, and if those facilities are properly sized for the additional flows.

Conveyance systems shall not be located where such facilities interfere with other underground utilities, nor where allowable design loads would be exceeded.

See D4-07 for conveyance system setbacks.

D4-04.2 Conveyance System Setbacks

Conveyance Systems Shall Not Be Located:

A. Where Such Facilities Interfere With Other Underground Utilities;

B. Where Allowable Design Loads Would Be Exceeded.

D4-04.3 Clearances / Other Utilities

A. All clearances listed below are from edge-to-edge of each pipe.

B. Check for crossing or parallel utilities. Maintain minimum vertical horizontal clearances. Avoid crossing at highly acute angles (the smallest angle measure between utilities should be between 45 and 90 degrees). For crossings of sanitary sewer pipes, the DOE criteria will apply.

C. Horizontal clearances from storm main & NDPs:

Cable TV	5’
Gas	5’
Power	5’
Sewer	5’
Telephone, Fiber Optics	5’
Water	5’

D. Vertical clearances from storm main & NDPs:

Cable TV	1’
Gas	1’
Power	1’
Sewer	1’
Telephone, Fiber Optics	1’
Water	1’

E. Where storm pipes cross over or below a water main, one full length of pipe shall be used with the pipes centered for maximum joint separation.

F. Send a letter and preliminary plan to existing utilities to inform them of new construction. Request as-built information and incorporate into plans. At a minimum the following utilities should be contacted: cable television, natural gas, power, sanitary sewer, telephone, water and telecommunications companies.

G. Seattle Public Utilities Transmission Pipelines: See standards for utilities installed in proximity of Seattle Public Utilities Transmission Pipelines in Appendix D-5, *Storm and Surface Water Reference Standards.*

D4-04.4 Open Channel Design Criteria

A. General

The methods and criteria below have been adapted from the 2009 King County Surface Water Design Manual.

Open channels may be classified as either natural or constructed. Natural channels are generally referred to as rivers, streams, creeks, or swales, while constructed channels are most often called ditches, or simply channels. The Critical Areas, Shorelines, and Clearing and Grading Codes should be reviewed for requirements related to streams.

Natural Channels

Natural channels are defined as those that have occurred naturally due to the flow of surface waters, or those that, although originally constructed by human activity, have taken on the appearance of a natural channel including a stable route and biological community. They may vary hydraulically along each channel reach and should be left in their natural condition, wherever feasible or required, in order to maintain natural hydrologic functions and wildlife habitat benefits from established vegetation.

Constructed Channels

Constructed channels are those constructed or maintained by human activity and include bank stabilization of natural channels. Constructed channels shall be either vegetation-lined, rock-lined, or lined with appropriately bioengineered vegetation.

Vegetation-lined channels are the most desirable of the constructed channels when properly designed and constructed. The vegetation stabilizes the slopes of the channel, controls erosion of the channel surface, and removes pollutants. The channel storage, low velocities, water quality benefits, and greenbelt multiple-use benefits create significant advantages over other constructed channels. The presence of vegetation in channels creates turbulence that results in loss of energy and increased flow retardation; therefore, the design engineer must consider sediment deposition and scour, as well as flow capacity, when designing the channel. Bioretention swales may also be designed to achieve flow control and/or treatment per Section D6-03.

Rock-lined channels are necessary where a vegetative lining will not provide adequate protection from erosive velocities. They may be constructed with riprap, or slope mattress linings. The rock lining increases the turbulence, resulting in a loss of energy and increased flow retardation. Rock lining also permits a higher design velocity and therefore a steeper design slope than in grass-lined channels. Rock linings are also used for erosion control at culvert and storm drain outlets, sharp channel bends, channel confluences, and locally steepened channel sections.

Bioengineered vegetation lining is a desirable alternative to the conventional methods of rock armoring. Soil bioengineering is a highly specialized science that uses living plants and plant parts to stabilize eroded or damaged land. Properly bioengineered systems are capable of providing a measure of immediate soil protection and mechanical reinforcement. As the plants grow they produce a vegetative protective cover and a root reinforcing matrix in the soil mantle. This root reinforcement serves several purposes:

The developed anchor roots provide both shear and tensile strength to the soil, thereby providing protection from the frictional shear and tensile velocity components to the soil mantle during the time when flows are receding and pore pressure is high in the saturated bank.

The root mat provides a living filter in the soil mantle that allows for the natural release of water after the high flows have receded.

The combined root system exhibits active friction transfer along the length of the living roots. This consolidates soil particles in the bank and serves to protect the soil structure from collapsing and the stabilization measures from failing.

The vegetative cover of bioengineered systems provides immediate protection during high flows by laying flat against the bank and covering the soil like a blanket. It also reduces pore pressure in saturated banks through transpiration by acting as a natural "pump" to "pull" the water out of the banks after flows have receded.

The King County publication Guidelines for Bank Stabilization Projects primarily focuses on projects on larger rivers and streams, but the concepts it contains may be used in conjunction with other natural resource information for stabilization projects on smaller systems. The WDFW Integrated Streambank Protection Guidelines is another useful reference.

B. Design Criteria

General

Open channels shall be designed to provide required conveyance capacity and bank stability while allowing for aesthetics, habitat preservation, and enhancement. Open channels shall be consistent with the WDFW Integrated Streambank Protection Guidelines.

Channel cross-section geometry shall be trapezoidal, triangular, parabolic, or segmental as shown in Figure 4.3 through 4.5. Side slopes shall be no steeper than 3:1 for vegetation-lined channels and 2:1 for rock-lined channels.

Vegetation-lined channels shall have bottom slope gradients of 6% or less and a maximum velocity at max design flow of 5 fps (see Table 4.1).

Rock-lined channels or bank stabilization of natural channels shall be used when design flow velocities exceed 5 feet per second. Rock stabilization shall be in accordance with Table 4.1 or stabilized with bioengineering methods as described above in "Constructed Channels".

See D4-07 for open channel setback information.

Conveyance systems shall be sized to accommodate the peak runoff from a 100-year, 24-hour storm.

Minimum freeboard requirements for open channels shall be one half (0.5) foot below the top of bank for the design flow rate.

The design shall consider the channel roughness both immediately after construction and when vegetation is well established.

Provide maintenance access for inspection and debris removal by conventional equipment. The type of equipment needing access is dependent on the size of channel. Large channels will need access for dump trucks and loaders. For small ditches, foot or pick-up truck access may suffice.

Table 4.2 Channel Protection

Velocity at Design Flow (fps)		REQUIRED PROTECTION		
Greater than	**Less than or equal to**	**Type of Protection**	**Thickness**	**Minimum Height Above Design Water Surface**
0	5	Grass lining Or Bioengineered lining	N/A	
5	8	Rock lining(1) Or Bioengineered lining	1 foot	1 foot
8	12	Riprap(2)	2 feet	2 feet
12	20	Engineered Scour Protection	Varies	2 feet

(1) Rock Lining shall be reasonably well graded as follows:

Maximum stone size: 12 inches
Median stone size: 8 inches
Minimum stone size: 2 inches

(2) Riprap shall be reasonably well graded as follows:

Maximum stone size: 24 inches
Median stone size: 16 inches
Minimum stone size: 4 inches

Note: Riprap sizing is governed by side slopes on channel, assumed to be approximately 3:1.

Riprap Design[1]

When riprap is set, stones are placed on the channel sides and bottom to protect the underlying material from being eroded. Proper riprap design requires the determination of the median size of stone, the thickness of the riprap layer, the gradation of stone sizes, and the selection of angular stones that will interlock when placed. Research by the U.S. Army Corps of Engineers has provided criteria for selecting the median stone weight, W50 (Figure 4.1). If the riprap is to be used in a highly turbulent zone (such as at a culvert outfall, downstream of a stilling basin, at sharp changes in channel geometry, etc.), the median stone W50 should be increased from 200% to 600% depending on the severity of the locally high turbulence. The thickness of the riprap layer should generally be twice the median stone diameter (D50) or at least that of the maximum stone. The riprap should have a reasonably well graded assortment of stone sizes within the following gradation:

$$1.25 = Dmax/D50 = 1.50$$

$$D15/D50 = 0.50$$

[1] From a paper prepared by M. Schaefer, Dam Safety Section, Washington State Department of Ecology.

$D_{min}/D_{50} = 0.25$

Detailed design methodology may be found in the Corps publication EM 1110-02-1601, Engineering and Design – Hydraulic Design of Flood Control Channels. For a more detailed analysis and design procedure for riprap requiring water surface profiles and estimates of tractive force, refer to the paper by Maynord et al in Journal of Hydraulic Engineering (A.S.C.E.), July 1989.

Riprap Filter Design

Riprap should be underlain by a sand and gravel filter (or filter fabric) to keep the fine materials in the underlying channel bed from being washed through the voids in the riprap. Likewise, the filter material must be selected so that it is not washed through the voids in the riprap. Adequate filters can usually be provided by a reasonably well graded sand and gravel material where:

$D_{15} < 5d_{85}$

The variable d_{85} refers to the sieve opening through which 85% of the material being protected will pass, and D_{15} has the same interpretation for the filter material. A filter material with a D_{50} of 0.5 mm will protect any finer material including clay. Where very large riprap is used, it is sometimes necessary to use two filter layers between the material being protected and the riprap.

Example:

What embedded riprap design should be used to protect a streambank at a level culvert outfall where the outfall velocities in the vicinity of the downstream toe are expected to be about 8 fps?

From Figure 4.1, W_{50} = 6.5 lbs, but since the downstream area below the outfall will be subjected to severe turbulence, increase W_{50} by 400% so that:

W_{50} = 26 lbs, D_{50} = 8.0 inches

The gradation of the riprap is shown in Figure 4.2, and the minimum thickness would be 1 foot (from Table 4-1); however, 16 inches to 24 inches of riprap thickness would provide some additional insurance that the riprap will function properly in this highly turbulent area.

Figure 4.2 shows that the gradation curve for ASTM C33, size number 57 coarse aggregate (used in concrete mixes), would meet the filter criteria. Applying the filter criteria to the coarse aggregate demonstrates that any underlying material whose gradation was coarser than that of a concrete sand would be protected.

Figure 4.1 Mean Channel Velocity Vs. Medium Stone Weight (W50) And Equivalent Stone Diameter

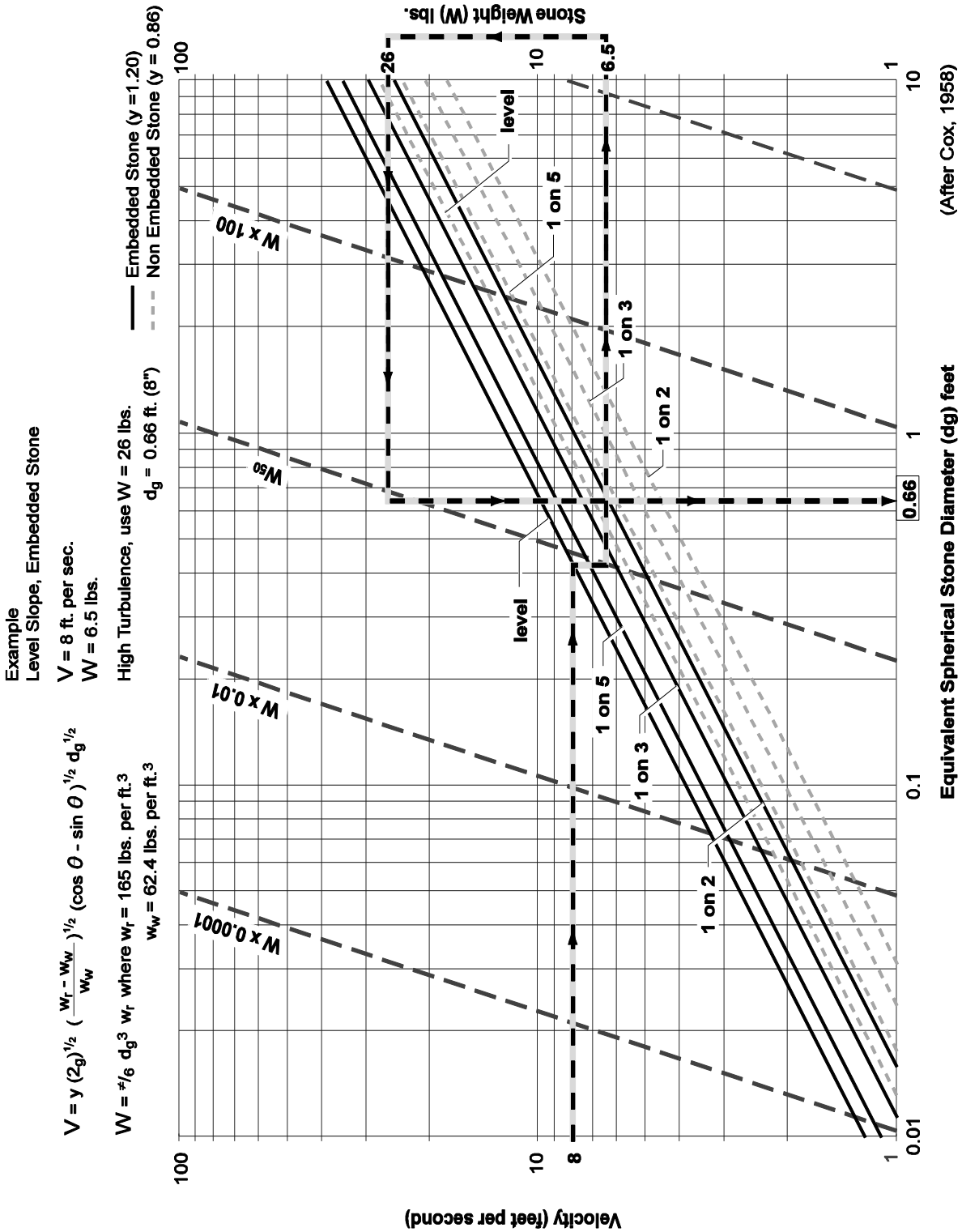

Figure 4.2 Riprap/Filter Example Gradation Curve

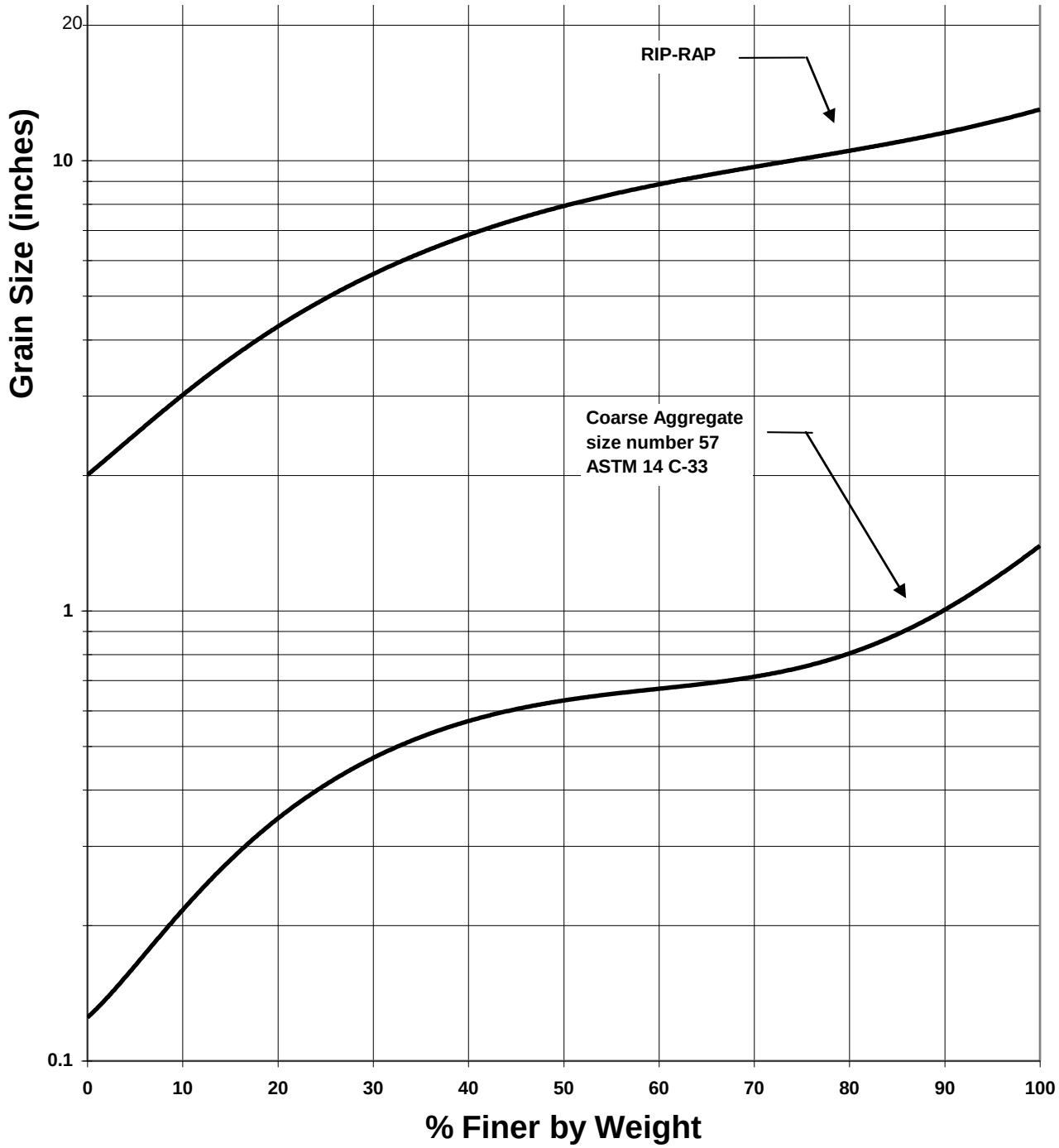

C. Methods of Analysis

Design Flows:

Design flows for sizing and assessing the capacity of open channels shall be determined using the hydrologic analysis methods described in Chapter D3 – Hydrologic Models. Flow control credits may not be used to reduce the required size of conveyance facilities.

Conveyance Capacity:

There are three acceptable methods of analysis for sizing and analyzing the capacity of open channels: Manning's equation for preliminary sizing, Direct Step backwater method, and Standard Step backwater method.

(1) Manning's Equation for Preliminary Sizing

Manning's equation is used for preliminary sizing of open channel reaches of uniform cross section and slope (i.e., prismatic channels) and uniform roughness. This method assumes the flow depth (or normal depth) and flow velocity remain constant throughout the channel reach for a given flow.

The charts in Figure 4.3 and Figure 4.4 may be used to obtain graphic solutions of Manning's equation for common ditch sections. For conditions outside the range of these charts or for more precise results, Manning's equation can be solved directly from its classic forms shown in Equations 4.10 and 4.11.

Table 4-3 provides a reference for selecting the appropriate "n" values for open channels. A number of engineering reference books, such as Open-Channel Hydraulics by V.T. Chow, may also be used as guides to select "n" values. Figure 4.5 contains the geometric elements of common channel sections useful in determining area A, wetted perimeter WP, and hydraulic radius (R= A/WP).

If flow restrictions occur that raise the water level above normal depth within a given channel reach, a backwater condition (or subcritical flow) is said to exist. This condition can result from flow restrictions created by a downstream culvert, bridge, dam, pond, lake, etc., and even a downstream channel reach having a higher flow depth. If backwater conditions are found to exist for the design flow, a backwater profile must be computed to verify that the channel's capacity is still adequate as designed. The Direct Step or Standard Step backwater methods presented in this section may be used for this purpose.

Table 4.3 Values Roughness Coefficient "N" For Open Channels

Type of Channel and Description	Manning's "*n*"* (Normal)
A. Constructed Channels	
a. Earth, straight and uniform	
1. Clean, recently completed	0.018
2. Gravel, uniform section, clean	0.025
3. With short grass, few weeds	0.027
b. Earth, winding and sluggish	
1. No vegetation	0.025
2. Grass, some weeds	0.030
3. Dense weeds or aquatic plants in deep channels	0.035
4. Earth bottom and rubble sides	0.030
5. Stony bottom and weedy banks	0.035
6. Cobble bottom and clean sides	0.040
c. Rock lined	
1. Smooth and uniform	0.035
2. Jagged and irregular	0.040
d. Channels not maintained, weeds and brush uncut	
1. Dense weeds, high as flow depth	0.080
2. Clean bottom, brush on sides	0.050
3. Same as #2, highest stage of flow	0.070
4. Dense brush, high stage	0.100
B. Natural Streams	
B-1 Minor streams (top width at flood stage < 100 ft.)	
a. Streams on plain	0.030
1. Clean, straight, full stage no rifts or deep pools	0.035
2. Same as #1, but more stones and weeds	0.040
3. Clean, winding, some pools and shoals	0.040
4. Same as #3, but some weeds	0.050
5. Same as #4, but more stones	
6. Sluggish reaches, weedy deep pools	0.070
7. Very weedy reaches, deep pools, or floodways with heavy stand of timber and underbrush	0.100
b. Mountain streams, no vegetation in channel, banks usually steep, trees and brush along banks submerged at high stages	
1. Bottom: gravel, cobbles, and few boulders	0.040
2. Bottom: cobbles with large boulders	0.050
B-2 Floodplains	
a. Pasture, no brush	
1. Short grass	0.030
2. High grass	0.035
b. Cultivated areas	
1. No crop	0.030
2. Mature row crops	0.035
3. Mature field crops	0.040
c. Brush	
1. Scattered brush, heavy weeds	0.050
2. Light brush and trees	0.060
3. Medium to dense brush	0.070
4. Heavy, dense brush	0.100
d. Trees	
1. Dense willows, straight	0.150
2. Cleared land with tree stumps, no sprouts	0.040
3. Same as #2, but with heavy growth of sprouts	0.060
4. Heavy stand of timber, a few down trees, little undergrowth, flood stage below branches	0.100
5. Same as #4, but with flood stage reaching branches	0.120

** Note: These "n" values are "normal" values for use in analysis of channels. For conservative design of channel capacity, the maximum values listed in other references should be considered. For channel bank stability, the minimum values should be considered.*

(2) Direct Step Backwater Method

The Direct Step backwater method may be used to compute backwater profiles on prismatic channel reaches (i.e., reaches having uniform cross section and slope) where a backwater condition or restriction to normal flow is known to exist. The method may be applied to a series of prismatic channel reaches in secession beginning at the downstream end of the channel and computing the profile upstream.

Calculating the coordinates of the water surface profile using this method is an iterative process achieved by choosing a range of flow depths, beginning at the downstream end, and proceeding incrementally up to the point of interest or to the point of normal flow depth. This is best accomplished by the use of a table (see Figure 4-7).

To illustrate analysis of a single reach, consider the following diagram:

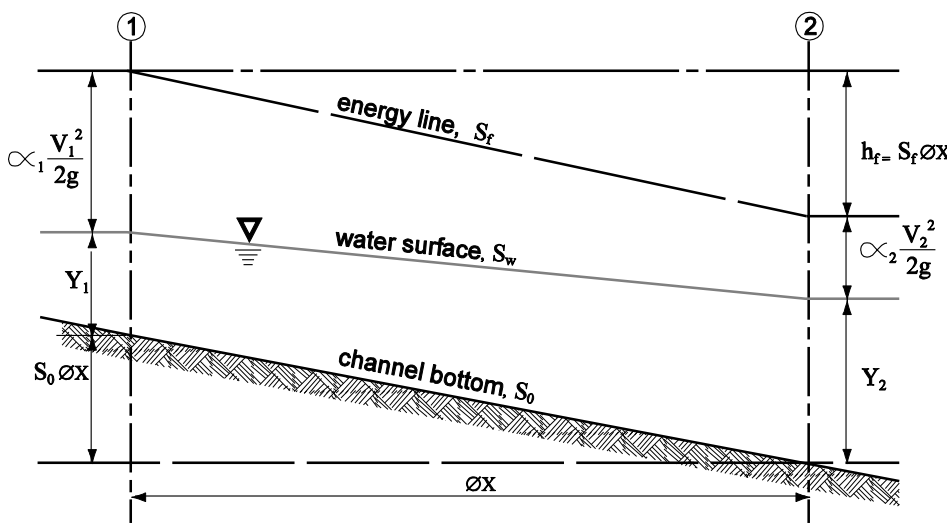

Equating the total head at cross sections 1 and 2, the following equation may be written:

$$S_o \Delta x + y_1 + \alpha_1 \frac{V_1^2}{2g} = y_2 + \alpha_2 \frac{V_2^2}{2g} + S_f \Delta x) \qquad (4\text{-}1)$$

where, Δx = distance between cross sections (ft)
y_1, y_2 = depth of flow (ft) at cross sections 1 and 2
V_1, V_2 = velocity (fps) at cross sections 1 and 2
α_1, α_2 = energy coefficient at cross sections 1 and 2
S_o = bottom slope (ft/ft)
S_f = friction slope = $(n^2V^2)/(2.21R^{1.33})$
g = acceleration due to gravity, (32.2 ft/sec^2)

If the specific energy E at any one cross section is defined as follows:

$$E = y + \alpha \frac{V^2}{2g} \qquad (4\text{-}2)$$

and assuming $\alpha = \alpha_1 = \alpha_2$ where α is the energy coefficient that corrects for the non-uniform distribution of velocity over the channel cross section, Equations 4-1 and 4-2 can be combined and rearranged to solve for Δx as follows:

$$\Delta x = (E_2 - E_1)/(S_o - S_f) = \Delta E/(S_o - S_f) \quad (4\text{-}3)$$

Typical values of the energy coefficient α are as follows:

Channels, regular section	1.15
Natural streams	1.3
Shallow vegetated flood fringes (includes channel)	1.75

For a given flow, channel slope, Manning's "*n*," and energy coefficient α, together with a beginning water surface elevation y_2, the values of Δx may be calculated for arbitrarily chosen values of y_1. The coordinates defining the water surface profile are obtained from the cumulative sum of Δx and corresponding values of y.

The normal flow depth, y_n, should first be calculated from Manning's equation to establish the upper limit of the backwater effect.

(3) Standard Step Backwater Method

The Standard Step Backwater Method is a variation of the Direct Step Backwater Method and may be used to compute backwater profiles on both prismatic and non-prismatic channels. In this method, stations are established along the channel where cross section data is known or has been determined through field survey. The computation is carried out in steps from station to station rather than throughout a given channel reach as is done in the Direct Step method. As a result, the analysis involves significantly more trial-and-error calculation in order to determine the flow depth at each station.

Computer Applications

Because of the iterative calculations involved, use of a computer to perform the analysis is recommended. The King County Backwater (KCBW) computer program included in the software package available with this manual includes a subroutine, BWCHAN, based on the Standard Step backwater method, which may be used for all channel capacity analysis. It can also be combined with the BWPIPE and BWCULV subroutines to analyze an entire drainage conveyance system. A schematic description of the nomenclature used in the BWCHAN subroutine is provided in Figure 4-8. See the KCBW program documentation for further information.

There are a number of commercial software programs for use on personal computers that use variations of the Standard Step backwater method for determining water surface profiles. The most common and widely accepted program is called HEC-RAS, published and supported by the United States Army Corps of Engineers Hydraulic Engineering Center. It is one of the models accepted by FEMA for use in performing flood hazard studies for preparing flood insurance maps. Other acceptable hydraulic models would include national numeric models meeting the minimum requirements of the Nation Flood Insurance Program for hydraulic models for determining the water surface elevation for riverine analysis as listed on the FEMA website. The

professional engineer is responsible for the appropriate application and accuracy of the results and is responsible for the proper selection of the model.

Figure 4.3 Ditches - Common Sections

PROPERTIES OF DITCHES

NO.	DIMENSIONS				HYDRAULICS			
	Side Slopes	B	H	W	A	WP	R	$R^{(2/3)}$
D-1	--	--	6.5"	5'-0"	1.84	5.16	0.356	0.502
D-1C	--	--	6"	25'-0"	6.25	25.50	0.245	0.392
D-2A	1.5:1	2'-0"	1'-0"	5'-0"	3.50	5.61	0.624	0.731
B	2:1	2'-0"	1'-0"	6'-0"	4.00	6.47	0.618	0.726
C	3:1	2'-0"	1'-0"	8'-0"	5.00	8.32	0.601	0.712
D-3A	1.5:1	3'-0"	1'-6"	7'-6"	7.88	8.41	0.937	0.957
B	2:1	3'-0"	1'-6"	9'-0"	9.00	9.71	0.927	0.951
C	3:1	3'-0"	1'-6"	12'-0"	11.25	12.49	0.901	0.933
D-4A	1.5:1	3'-0"	2'-0"	9'-0"	12.00	10.21	1.175	1.114
B	2:1	3'-0"	2'-0"	11'-0"	14.00	11.94	1.172	1.112
C	3:1	3'-0"	2'-0"	15'-0"	18.00	15.65	1.150	1.098
D-5A	1.5:1	4'-0"	3'-0"	13'-0"	25.50	13.82	1.846	1.505
B	2:1	4'-0"	3'-0"	16'-0"	30.00	16.42	1.827	1.495
C	3:1	4'-0"	3'-0"	22'-0"	39.00	21.97	1.775	1.466
D-6A	2:1	--	1'-0"	4'-0"	2.00	4.47	0.447	0.585
B	3:1	--	1'-0"	6'-0"	3.00	6.32	0.474	0.608
D-7A	2:1	--	2'-0"	8'-0"	8.00	8.94	0.894	0.928
B	3:1	--	2'-0"	12'-0"	12.00	12.65	0.949	0.965
D-8A	2:1	--	3'-0"	12'-0"	18.00	13.42	1.342	1.216
B	3:1	--	3'-0"	18'-0"	27.00	18.97	1.423	1.265
D-9	7:1	--	1'-0"	14'-0"	7.00	14.14	0.495	0.626
D-10	7:1	--	2'-0"	28'-0"	28.00	28.28	0.990	0.993
D-11	7:1	--	3'-0"	42'-0"	63.00	42.43	1.485	1.302

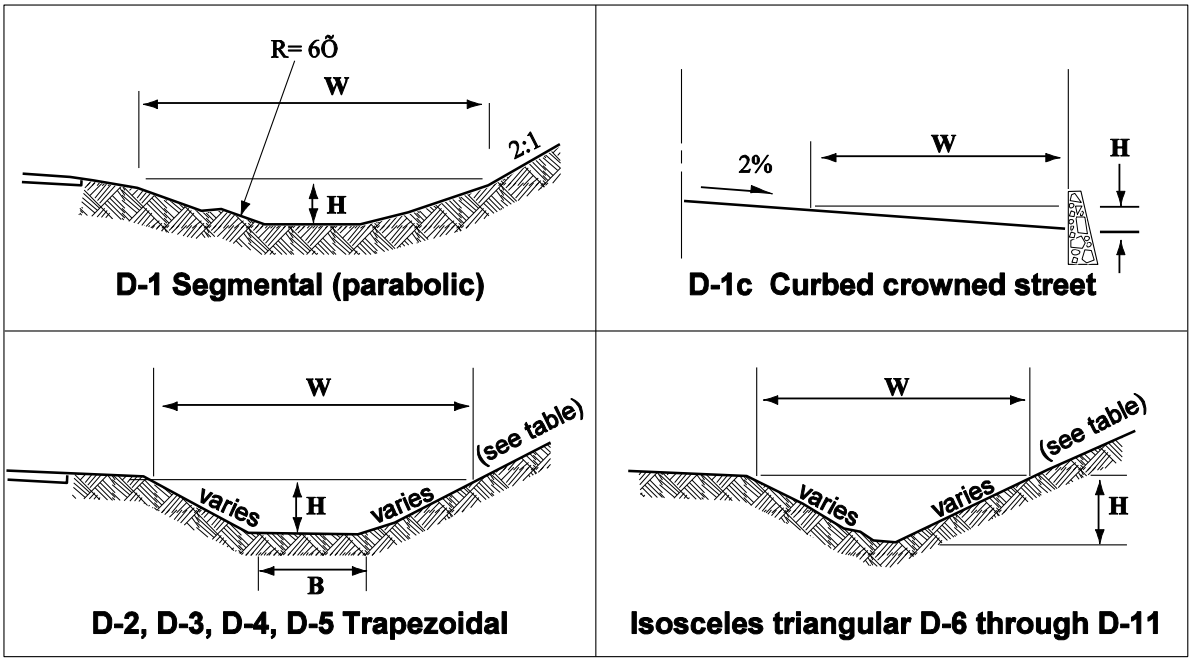

Figure 4.4 Drainage Ditches - Common Sections

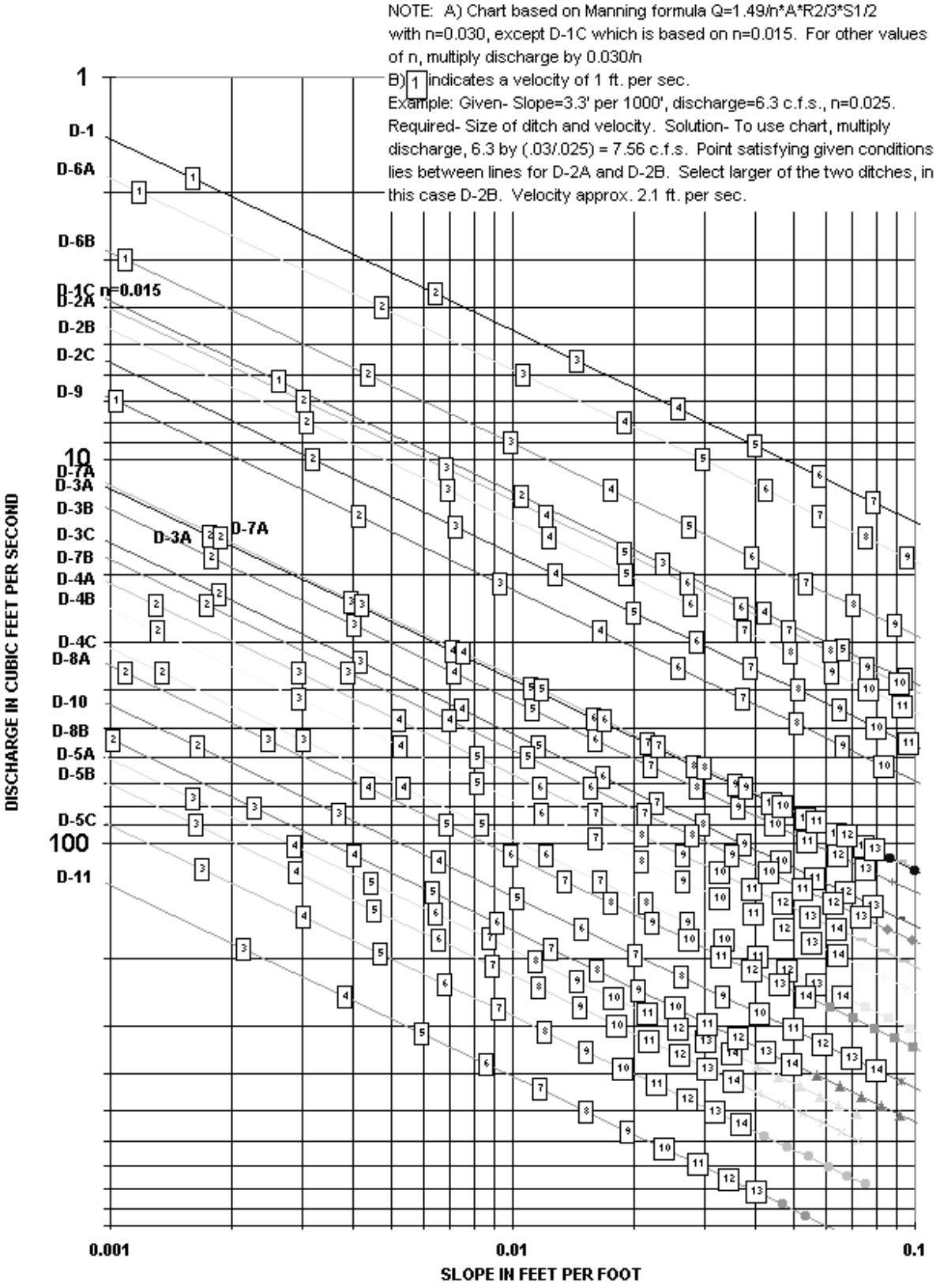

Figure 4.5 Geometric Elements Of Common Sections

Section	Area A	Wetted perimeter P	Hydraulic radius R	Top width W	Hydraulic depth D	Section factor Z
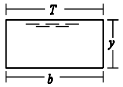 Rectangle	by	$b + 2y$	$\frac{by}{b + 2y}$	b	y	$by^{1.5}$
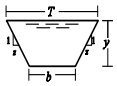 Trapezoid	$(b + zy)y$	$b + 2y\sqrt{1 + z^2}$	$\frac{(b + zy)y}{b + 2y\sqrt{1 + z^2}}$	$b + 2zy$	$\frac{(b + zy)y}{b + 2zy}$	$\frac{[(b + zy)y]^{1.5}}{\sqrt{b + 2zy}}$
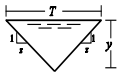 Triangle	zy^2	$2y\sqrt{1 + z^2}$	$\frac{zy}{2\sqrt{1 + z^2}}$	$2zy$	$\frac{1}{2}y$	$\frac{\sqrt{2}}{2}zy^{2.5}$
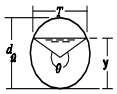 Circle	$\frac{1}{8}(\theta - \sin\theta)d_{\hat{u}}^2$	$\frac{1}{2}\theta d_{\hat{u}}$	$\frac{1}{4}\left(1 - \frac{\sin\theta}{\theta}\right)d_{\hat{u}}$	$(\sin(\frac{1}{2}\theta)d_{\hat{u}})$ or $2\sqrt{y(d_{\hat{u}} - y)}$	$\frac{1}{8}\left(\frac{\theta - \sin\theta}{\sin\frac{1}{2}\theta}\right)d_{\hat{u}}$	$\frac{\sqrt{2}}{32}\frac{(\theta - \sin\theta)^{1.5}}{(\sin\frac{1}{2}\theta)^{0.5}}d_{\hat{u}}^{2.5}$
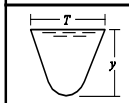 Parabola	$\frac{2}{3}Ty$	$T + \frac{8y^2}{3T}$ *	$\frac{2T^2y}{3T^2 + 8y^2}$ *	$\frac{3A}{2y}$	$\frac{2}{3}y$	$\frac{2}{9}\sqrt{6}Ty^{1.5}$
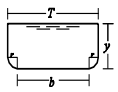 Round-cornered Rectangle ($y>r$)	$(\pi/2 - 2)r^2 + (b + 2r)y$	$(\pi - 2)r + b + 2y$	$\frac{(\pi/2 - 2)r^2 + (b + 2r)y}{(\pi - 2)r + b + 2y}$	$b + 2r$	$\frac{(\pi/2 - 2)r^2}{(b + 2r)} + y$	$\frac{[(\pi/2 - 2)r^2 + (b + 2r)y]^{1.5}}{\sqrt{b + 2y}}$
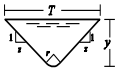 Round-bottomed Triangle	$\frac{T^2}{4z} - \frac{r^2}{z}(1 - z\cot^{-1}z)$	$\frac{T}{z}\sqrt{1 + z^2} - \frac{2r}{z}(1 - z\cot^{-1}z)$	$\frac{A}{P}$	$2[z(y - r) + r\sqrt{1 + z^2}]$	$\frac{A}{T}$	$A\sqrt{\frac{A}{T}}$

*Satisfactory approximation for the interval 0<x"1, where x=4y/T. When x>1, use the exact expression $P = (T/2)\left[\sqrt{1 + x^2} + \frac{1}{x}\ln\left(x + \sqrt{1 + x^2}\right)\right]$

Figure 4.6 Open Channel Flow Profile Computation

Q = _____ n = _____ S_o = _____ α = _____ Y_n = _____

y (1)	A (2)	R (3)	$R^{4/3}$ (4)	V (5)	$\alpha V^2/2g$ (6)	E (7)	ΔE (8)	S_f (9)	$\bar{S}_f$ (10)	$S_o - \bar{S}_f$ (11)	Δx (12)	x (13)

Figure 4.7 Direct Step Backwater Method - Example

y (1)	A (2)	R (3)	$R^{4/3}$ (4)	V (5)	$\alpha V^2/2g$ (6)	E (7)	ΔE (8)	S_f (9)	$\bar{S}_f$ (10)	$S_o - \bar{S}_f$ (11)	Δx (12)	x (13)
6.0	72.0	2.68	3.72	0.42	0.0031	6.0031	-	0.00002	-	-	-	-
5.5	60.5	2.46	3.31	0.50	0.0040	5.5040	0.4990	0.00003	0.000025	0.00698	71.50	71.5
5.0	50.0	2.24	2.92	0.60	0.0064	5.0064	0.4976	0.00005	0.000040	0.00696	71.49	142.99
4.5	40.5	2.01	2.54	0.74	0.0098	4.5098	0.4966	0.00009	0.000070	0.00693	71.64	214.63
4.0	32.0	1.79	2.17	0.94	0.0157	4.0157	0.4941	0.00016	0.000127	0.00687	71.89	286.52
3.5	24.5	1.57	1.82	1.22	0.0268	3.5268	0.4889	0.00033	0.000246	0.00675	72.38	358.90
3.0	18.0	1.34	1.48	1.67	0.0496	3.0496	0.4772	0.00076	0.000547	0.00645	73.95	432.85
2.5	12.5	1.12	1.16	2.40	0.1029	2.6029	0.4467	0.00201	0.001387	0.00561	79.58	512.43
2.0	8.0	0.89	0.86	3.75	0.2511	2.2511	0.3518	0.00663	0.004320	0.00268	131.27	643.70

The step computations are carried out as shown in the above table. The values in each column of the table are explained as follows:

Col. 1. Depth of flow (ft) assigned from 6 to 2 feet

Col. 2. Water area (ft^2) corresponding to depth y in Col. 1

Col. 3 Hydraulic radius (ft) corresponding to y in Col. 1

Col. 4. Four-thirds power of the hydraulic radius

Col. 5. Mean velocity (fps) obtained by dividing Q (30 cfs) by the water area in Col. 2

Col. 6. Velocity head (ft)

Col. 7. Specific energy (ft) obtained by adding the velocity head in Col. 6 to depth of flow in Col. 1

Col. 8. Change of specific energy (ft) equal to the difference between the E value in Col. 7 and that of the previous step.

Col. 9. Friction slope S_f, computed from V as given in Col. 5 and $R^{4/3}$ in Col. 4

Col.10. Average friction slope between the steps, equal to the arithmetic mean of the friction slope just computed in Col. 9 and that of the previous step

Col.11. Difference between the bottom slope, S_o, and the average friction slope, S_f

Col.12. Length of the reach (ft) between the consecutive steps; computed by

$\Delta x = \Delta E/(S_o - S_f)$ or by dividing the value in Col. 8 by the value in Col. 11

Col.13. Distance from the beginning point to the section under consideration. This is equal to the cumulative sum of the values in Col. 12 computed for previous steps.

Figure 4.8 BWCHAN Computer Subroutine – Variable Definitions

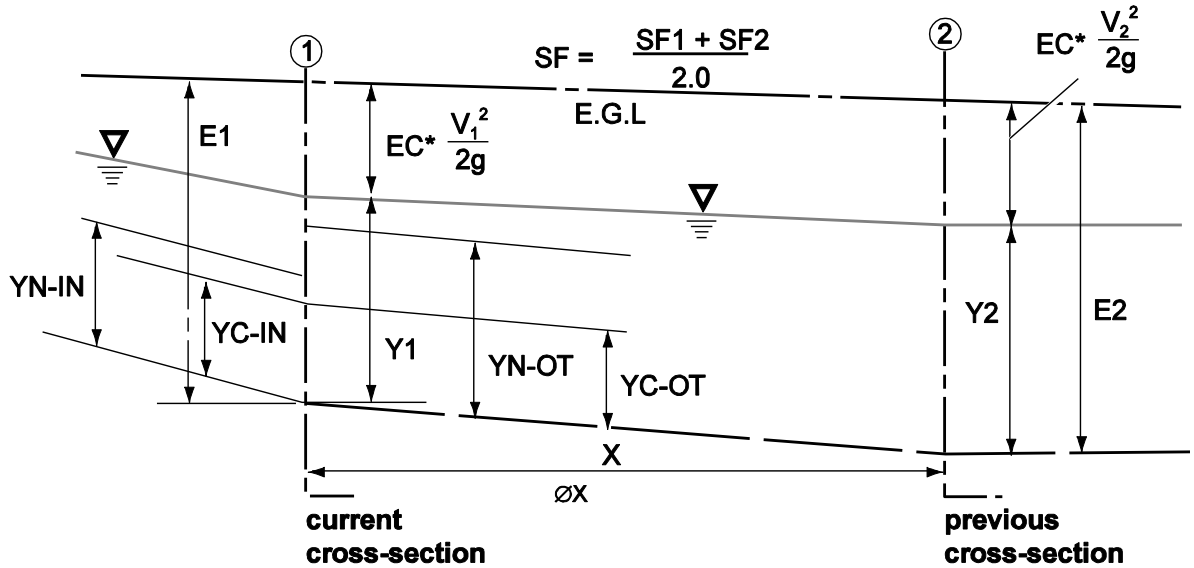

BWCHAN – VARIABLE DEFINITIONS

YC-IN	Critical Depth (ft) at current section based on incoming flow rate.
YC-OUT	Critical Depth (ft) at current section based on outgoing flow rate.
YN-IN	Normal Depth (ft) at current section based on incoming flow rate/channel grade.
YN-OUT	Normal Depth (ft) at current section based on outgoing flow rate/channel grade.
Y1	Final Water Depth (ft) at current cross section
N-Y1	Composite n-factor of current section for final depth, Y1.
A-Y1	Cross-sectional Area of current section for final depth, Y1.
WP-Y1	Wetted Perimeter (ft) of current section for final depth, Y1.
V-Y1	Average Velocity (fps) of current section for final depth, Y1.
E1	Total Energy Head (ft) at current section $\left(Y1 + EC * V_1^2 / 2g\right)$
E2	Total Energy Head (ft) at pervious or downstream section.
SF1	Friction Slope of current section.
SF2	Friction Slope of previous or downstream section.
DXY	Distance (expressed as a fraction of the current reach length) from the previous or downstream section to where the flow profile would intersect the final water depth, Y1, assuming Y1 were to remain constant
EC	Energy Coefficient "α"
Q-TW	The flow rate used to determine Tailwater Height from an inputted HW/TW Data File.

TW-HT	Tailwater Height.
Q-Y1	Flow rate (cfs) in channel at current section, for depth, Y1
VU-Y1	Upstream Velocity (fps) at current section for depth, Y1 ("Adjust" option).
V1-HD	Channel Velocity Head (ft) at current section.
VU-HD	Upstream Velocity Head (ft) at current section.

D4-04.5 Floodplain/Floodway Analysis

The methods and criteria below have been adapted from the 2009 King County Surface Water Design Manual.

A. General

Floodplain/floodway studies establish base flood elevations and delineate floodplains and/or floodways when Bellevue's Development Services Department determines that a proposed project contains or is adjacent to a flood hazard area for a river, stream, lake, wetland, closed depression, or other water feature. Furthermore, when development is proposed within the floodplain, the floodplain/floodway study is used to show compliance with the critical areas code (BCC 20.25H.175) flood hazard area regulations.

There are four conditions affecting the requirements for floodplain/floodway studies. Each condition is considered a threshold for determining the type of studies required and the documentation needed to meet the study requirements. Each study threshold and related study requirements are shown in the table below, and described further in this section.

D4-04.5 Floodplain/Floodway Analysis

The methods and criteria below have been adapted from the 2009 King County Surface Water Design Manual.

A. General

Floodplain/floodway studies establish base flood elevations and delineate floodplains and/or floodways when Bellevue's Development Services Department determines that a proposed project contains or is adjacent to a flood hazard area for a river, stream, lake, wetland, closed depression, or other water feature. Furthermore, when development is proposed within the floodplain, the floodplain/floodway study is used to show compliance with the critical areas code (BCC 20.25H.175) flood hazard area regulations.

There are four conditions affecting the requirements for floodplain/floodway studies. Each condition is considered a threshold for determining the type of studies required and the documentation needed to meet the study requirements. Each study threshold and related study requirements are shown in the table below, and described further in this section.

Table 4.4 Floodplain/Floodway Study Thresholds And Requirements

Threshold	Study	Requirements
The project site is on land that is outside of an already delineated floodplain and above the floodplain's base flood elevation based on best available floodplain data determined in accordance with BCC 20.25H.175 and associated public rule.	No floodplain study required	• Show delineation of floodplain on the site improvement plan and indicate base flood elevation See Section D4-04.5 B for more details
The project site is on land that is at least 10 vertical feet above the ordinary high water mark or 2 feet above the downstream overflow elevation of a water feature for which a floodplain has not been determined in accordance with BCC 20.25H.175.	Approximate Floodplain Study per Section D4-04.5 C	• Submit an engineering plan with approximate base flood elevation See further requirements in Section D4-04.5 C
The project site does not meet the above thresholds and is either on land that is outside of an already delineated Zone A floodplain (i.e., without base flood elevations determined), or is adjacent to a water feature for which a floodplain has not been determined in accordance with BCC 20.25H.175.	Minor Floodplain Study per Section D4-04.5 D.	• Backwater model • Submit an engineering plan with determined base flood elevation See further requirements in Section D4-04.5 D
The project site is on land that is partially or fully within an already delineated floodplain of a river or stream, or is determined by a Minor Floodplain Study to be partially or fully within the floodplain of a river or stream.	Major Floodplain/Floodway Study per Section D4-04.5 E	• Show mapped floodplain/floodway on the site improvement plan and indicate base flood elevation • See further requirements in Section D4-04.5 E.

B. No Floodplain Study Required

If the proposed project site is on land that is outside of an already delineated floodplain and is above the already determined base flood elevation for that floodplain, based on best available floodplain data determined in accordance with BCC20.25H.175 and associated public rule, then no floodplain study is required.

In this situation, if the already determined floodplain covers any portion of the site, the boundary of that floodplain and its base flood elevation must be shown on the project's site improvement plan.

C. Approximate Floodplain Study

If the proposed project site is on land that is at least 10 feet above the ordinary high water mark or 2 feet above the downstream overflow elevation of a water feature for which the floodplain has not been delineated in accordance with BCC20.25H.175, then an Approximate Floodplain Study may be used to determine an approximate floodplain and base flood elevation.

The intent of the Approximate Floodplain Study is to reduce required analysis in those situations where the project site is adjacent to a flood hazard area, but by virtue of significant topographical relief, is clearly in no danger of flooding. The minimum 10 vertical feet of separation from ordinary high water reduces the level of required analysis for those projects adjacent to streams confined to deep channels or ravines, or near lakes or wetlands. The minimum 2 feet clearance above the downstream overflow elevation is intended to avoid flood hazard areas created by a downstream impoundment of water behind a road fill or in a lake, wetland, or closed depression.

Use of the Approximate Floodplain Study requires submittal of an engineering plan showing the proposed project site is at least 10 feet above the ordinary high water elevation of the water feature in question, or at least 2 feet above the downstream overflow elevation of the water feature, whichever is less, subject to the following conditions:

1. The design engineer preparing the engineering plan shall determine an approximate base flood elevation and include a narrative describing his/her level of confidence in the approximate base flood elevation. The base flood elevation shall include calculations of Normal Depth for Uniform Flow, as documented in Chow, V.T. (1959). The narrative must include, but is not limited to, an assessment of potential backwater effects (such as might result from nearby river flooding, for example); observations and/or anecdotal information on water surface elevations during previous flood events; and an assessment of potential for significantly higher future flows at basin build out. Note: Many of these issues will have been addressed in a Level 1 downstream analysis, if required. Acceptance of the approximate base flood elevation shall be at the sole discretion of The Utility. If the approximate base flood elevation is not acceptable, a Minor Floodplain Study or Major Floodplain/Floodway Study may be required.
2. That portion of the site that is at or below the calculated base flood elevation must be delineated and designated as a floodplain on the engineering plan.

D. Minor Floodplain Study

If the proposed project site does not meet the conditions for "no floodplain study required" per Section D4-04.5(B) or for use of the Approximate Floodplain Study per Section D4-04.5(C), and the project site is either on land that is outside of an already delineated Zone A floodplain (i.e., without base flood elevations determined) or is adjacent to a water feature for which a floodplain has not been determined in accordance with BCC 20.25H.175, then a Minor Floodplain Study may be used to determine the floodplain. However, if the Minor Floodplain Study determines that all or a portion of the project site is at or below the base flood elevation of a river or stream and thus within the floodplain, then the applicant must either redesign the project site to be out of the floodplain or complete a Major Floodplain/Floodway Study per Section D4-04.5(E).

Use of the Minor Floodplain Study requires submittal of an engineering plan and supporting calculations. That portion of the site that is at or below the determined base flood elevation must be delineated and designated as a floodplain on the engineering plan.

Methods of Analysis

For streams without a floodplain or flood hazard study, or for drainage ditches or culvert headwaters, the base flood elevation and extent of the floodplain shall be determined using the

Direct Step backwater method, Standard Step backwater method, or the King County Backwater computer program, as described in D4-04.4(C).

For lakes, wetlands, and closed depressions without an approved floodplain or flood hazard study, the base flood elevation and the extent of the floodplain shall be determined using the "point of compliance technique" as defined in the 2009 King County Surface Water Design Manual, Section 3.3.6.

E. Major Floodplain/Floodway Study

If the proposed project site is on land that is partially or fully within an already delineated floodplain of a river or stream, or determined by a Minor Floodplain Study to be partially or fully within the floodplain of a river or stream, then a Major Floodplain/Floodway Study is required to determine the floodplain, floodway, and base flood elevation in accordance with the methods and procedures presented in this section. This information will be used by to evaluate the project's compliance with the regulations specified in BCC 20.25H.175 for development or improvements within the floodplain.

Major Floodplain/Floodway Studies must conform to FEMA regulations described in Part 65 of 44 Code of Federal Regulations (CFR). In addition, the following information must be provided and procedures performed.

Information Required

The applicant shall submit the following information for review of a floodplain/floodway analysis in addition to that required for the drainage plan of a proposed project. This analysis shall extend upstream and downstream a sufficient distance to adequately include all backwater conditions that may affect flooding at the ***site*** and all reaches that may be affected by alterations to the site.

Floodplain/Floodway Map

A Major Floodplain/Floodway Study requires submittal of five copies of a separate floodplain/floodway map stamped by a licensed civil engineer and a professional land surveyor registered in the State of Washington (for the base survey). The map must accurately locate any proposed development with respect to the floodplain and floodway, the channel of the stream, and existing development in the floodplain; it must also supply all pertinent information such as the nature of any proposed project, legal description of the property on which the project would be located, fill quantity, limits and elevation, the building floor elevations, flood-proofing measures, and any use of compensatory storage.

The map must show elevation contours at a minimum of 2-foot vertical intervals and shall comply with survey and map guidelines published in the FEMA publication *Guidelines and Specifications for Flood Hazard Mapping Partners*. The map must show the following:

- Existing elevations and ground contours;
- Locations, elevations and dimensions of existing structures, and fills;
- Size, location, elevation, and spatial arrangement of all proposed structures, fills and excavations, including proposed compensatory storage areas, with final grades on the site;
- Location and elevations of roadways, water supply lines, and sanitary sewer facilities, both existing and proposed.

Study Report

A Major Floodplain/Floodway Study also requires submittal of two copies of a study report, stamped by a licensed civil engineer, which must include calculations or any computer analysis input and output information as well as the following additional information:

- Valley cross sections showing the channel of the river or stream, the floodplain adjoining each side of the channel, the computed FEMA floodway, the cross-sectional area to be occupied by any proposed development, and all historic high water information.
- Profiles showing the bottom of the channel, the top of both left and right banks, and existing and proposed base flood water surfaces.
- Plans and specifications for flood-proofing any structures and fills, construction areas, materials storage areas, water supply, and sanitary facilities within the floodplain.
- Complete printout of input and output (including any error messages) for HEC-RAS. Liberal use of comments will assist in understanding model logic and prevent review delays.
- One ready-to-run digital copy of the HEC-RAS input file used in the study. Data shall be submitted on a disk in Windows format.

The applicant shall prepare a written summary describing the model development calibration, hydraulic analysis, and floodway delineation. The summary shall also include an explanation of modeling assumptions and any key uncertainties.

Determining Flood Flows

One of two techniques are used to determine the flows used in the analysis, depending on available information as determined by the Utilities Department Engineering Division. The first technique is for basins in adopted basin plan areas. The second technique is used on catchments without gauge data. In both cases, the design engineer shall be responsible for assuring that the hydrologic methods used are technically reasonable and conservative, conform to the *Guidelines and Specifications for Flood Hazard Mapping Partners*, and are acceptable by FEMA. Refer to Table 3.1 in Chapter D3, Hydrologic Models for allowable models.

Flood Flows from Adopted Basin Plan Information

For those areas with a basin plan prepared since 1986, flood flows shall be determined using information from the adopted basin plan. Consult with Utilities Department Engineering Division for more information. The hydrologic model used in the basin plan shall be updated to include the latest changes in zoning, or any additional information regarding the basin that has been acquired since the adoption of the basin plan.

Flood Flows from a Calibrated Continuous Model

Flood flows may be determined by utilizing a continuous flow simulation model such as HSPF. Where flood elevations or stream gage data are available, the model shall be calibrated; otherwise, regional parameters may be used. Consult Utilities Department Engineering Division for available data and guidance.

Determining Flood Elevations, Profiles, and Floodway Reconnaissance

The applicant's design engineer is responsible for the collection of all existing data with regard to flooding in the study area. This shall include a literature search of all published reports in the

study area and adjacent communities, and an information search to obtain all unpublished information on flooding in the immediate and adjacent areas from federal, state, and local units of government. This search shall include specific information on past flooding in the area, drainage structures such as bridges and culverts that affect flooding in the area, available topographic maps, available flood insurance rate maps, photographs of past flood events, and general flooding problems within the study area. A field reconnaissance shall be made by the applicant's design engineer to determine hydraulic conditions of the study area, including type and number of structures, locations of cross sections, and other parameters, including the roughness values necessary for the hydraulic analysis.

Base Data

Cross sections used in the hydraulic analysis shall be representative of current channel and floodplain conditions obtained by surveying. When cross-sections data is obtained from other studies, the data shall be confirmed to represent current channel and floodplain conditions, or new channel cross-section data shall be obtained by field survey. Topographic information obtained from aerial photographs may be used in combination with surveyed cross sections in the hydraulic analysis. The elevation datum of all information used in the hydraulic analysis shall be specified. All information shall be referenced directly to NAVD 1988 (and include local correlation to NGVD 1929) unless otherwise approved by The Utility. See Table 4.5 for correlations of other datum to NAVD 1988.

Methodology

Flood profiles and floodway studies shall be calculated using the U.S. Army Corps of Engineers' HEC-RAS computer model (or subsequent revisions).

Floodway Determination

Bellevue recognizes two distinct floodway definitions. The FEMA floodway describes the limit to which encroachment into the natural conveyance channel can cause one foot or less rise in water surface elevation. The zero-rise floodway is based upon the limit to which encroachment can occur without any measurable increase in water surface elevation or energy grade line. Floodway determinations/studies are subject to the following requirements:

- FEMA floodways are determined through the procedures outlined in the FEMA publication *Guidelines and Specifications for Flood Hazard Mapping Partners* using the 1-foot maximum allowable rise criteria.
- Transitions shall take into account obstructions to flow such as road approach grades, bridges, piers, or other restrictions. General guidelines for transitions may be found in *FEMA Guidelines and Specifications for Flood Hazard Mapping Partners*, and the *HEC-RAS User's Manual, Hydraulic Reference Manual and Applications Guidelines*.
- Zero-rise floodways are assumed to include the entire 100-year floodplain unless The Utility approves a detailed study that defines a zero-rise floodway.
- Zero-rise means no measurable increase in water surface elevation or energy grade line. For changes between the unencroached condition and encroachment to the zero-rise floodway, HEC-RAS must report 0.00 as both the change in water surface elevation and the change in energy grade. HEC-RAS must further report

the exact same elevations for both the computed water surface and energy grade line.

- Floodway studies must reflect the transitions mentioned in Requirement 2 above. FEMA floodway boundaries are to follow stream lines, and should reasonably balance the rights of property owners on either side of the floodway. Use of the "automatic equal conveyance encroachment options" in the HEC-RAS program will be considered equitable. Where HEC-RAS automatic options are otherwise not appropriate, the floodway must be placed to minimize the top width of the floodway.
- Submittal of floodway studies for the Utility review must include an electronic copy of the HEC-RAS input and output files, printouts of these files, and a detailed written description of the modeling approach and findings.

Previous Floodplain Studies

If differences exist between a study previously approved by the Utility and the applicant's design engineer's calculated hydraulic floodways or flood profiles, the design engineer shall provide justification and obtain Utility approval for these differences.

Zero-Rise Calculation

For a zero-rise analysis, the flow profile for the existing and proposed site conditions shall be computed and reported to the nearest 0.01 foot. A zero-rise analysis requires only comparisons of the computed water surface elevations and energy grade lines for the existing and proposed conditions. Such comparisons are independent of natural dynamics and are not limited by the accuracy of the model's absolute water surface predictions.

Adequacy of Hydraulic Model

At a minimum, the Utility considers the following factors when determining the adequacy of the hydraulic model and flow profiles for use in floodway analysis:

- Cross section spacing
- Differences in energy grade
- Note: Significant differences in the energy grade from cross section to cross section are an indication that cross sections should be more closely spaced or that other inaccuracies exist in the hydraulic model.
- Methods for analyzing the hydraulics of structures such as bridges and culverts
- Lack of flow continuity
- Use of a gradually-varied flow model

Note: In certain circumstances (such as weir flow over a levee or dike, flow through the spillway of a dam, or special applications of bridge flow), rapidly-varied flow techniques shall be used in combination with a gradually-varied flow model.

Manning's "*n*" values

Calibration of the hydraulic model with past flood events

Special applications: In some cases, HEC-RAS alone may not be sufficient for preparing the floodplain/floodway analysis. This may occur where sediment transport, two-dimensional flow, or other unique hydraulic circumstances affect the accuracy of the HEC-RAS hydraulic model. In these cases, the applicant shall obtain Utility approval of other methods proposed for estimating the water surface profiles.

Table 4.5 Datum Correlations

Correlation From ⟶ To	NAVD 1988	KCAS	U.S. Engineers	City of Seattle	NGVD, USGS & USC & GS 1947	Seattle Area Tide Tables & Navigation Charts 1954 & Later
NAVD 1988	--	-3.58	3.44	-9.54	-3.49	2.98
KCAS	3.58	--	7.02	-5.96	0.09	6.56
U.S. Engineers	-3.44	-7.02	--	-12.98	-6.93	-0.46
City of Seattle	9.54	5.96	12.98	--	6.05	12.52
-NGVD, USGS & USC& GS 1947 (adjusted to the 1929 datum)	3.49	-0.09	6.93	-6.05	--	6.47
Seattle Area Tide Tables & Navigation Charts 1954 & Later (based on epoch 1924-1942)	-2.98	-6.56	0.46	-12.52	-6.47	--
Design Tidal Tailwater Elevation	12.08	8.50	15.52	2.54	8.59	15.06
Mean Higher High Water (MHHW)	8.34	4.76	11.78	-1.20	4.85	11.32
Mean High Water (MHW)	7.49	3.91	10.93	-2.05	4.00	10.47
Mean Low Water (MLW)	-0.16	-3.74	3.28	-9.70	-3.65	2.82
Mean Lower Low Water (MLLW)	-2.98	-6.56	0.46	-12.52	-6.47	0.00

KCAS datum = Sea Level Datum 1929 (a.k.a. NGVD 1929)

D4-04.6 Bridges

A. Hydraulic Criteria - Bridges

Bridges shall conform to Hydraulic Code Section WAC 220-110-070 and

Land Use Code Section 20.25(H) 110A.

B. Freeboard Requirements - Bridges

The water surface elevation for the 100-year storm shall be a least one (1) foot below the lowest bridge girder to allow for the passage of floating debris.

D4-04.7 Culverts

A. Hydraulic Criteria - Culverts

When an abrasive bed load is anticipated or when velocities exceed 10 feet per second, protective measures shall be implemented to minimize pipe damage.

When a culvert is approved by the City in lieu of a bridge per Section 20.25(H)l10A of the Land Use Code, such culverts shall:

- span the bank full width of the channel;
- be lined with bed material that is similar to the adjacent channel bed
- have a slope similar to the existing channel;
- have sufficient capacity and one (1) foot freeboard to pass the 100- year design storm; and meet the Washington State Hydraulic Code Rules.

B. Manning "n" values

For culverts, use the factors set forth in Table 4.9 of these Standards.

C. Design Flow Rate

Conveyance systems shall be sized to accommodate the peak runoff from a 100-year storm.

D. Freeboard Requirements - Culverts

For Type S and F streams, the water surface elevation for the 100-year storm shall be at least one (1) foot below the crown of the culvert to allow for the passage of floating debris.

E. Minimum Diameter, Slope, and Velocity

The minimum diameter of any driveway culvert shall be 12-inches. Where minimum cover requirements can be met, a minimum 18-inch diameter culvert shall be used to minimize debris blockages.

Headwalls, cut-off walls, and/or anti-seep collars shall be provided on culverts where the hydraulic piping of bedding and backfill materials is possible.

F. Energy Dissipation

When discharging to an existing ditch, swale, or stream, energy dissipation is required to avoid erosion. Design energy dissipation measures pursuant to Section D4-02.

G. Maintenance Access

Provide maintenance access to the upstream and downstream ends of the culvert for inspection and debris removal.

H. Design Criteria

Headwater

For culverts 18-inch diameter or less, the maximum allowable headwater elevation (measured from the inlet invert) shall not exceed 2 times the pipe diameter or arch-culvert-rise at design flow (i.e., the 100-year, 24-hr peak flow rate).

For culverts larger than 18-inch diameter, the maximum allowable design flow headwater elevation (measured from the inlet invert) shall not exceed 1.5 times the pipe diameter or arch-culvert-rise at design flow.

The maximum headwater elevation at design flow shall be below any road or parking lot subgrade.

Inlets and Outlets

(1) All inlets and outlets in or near roadway embankments must be flush with and conforming to the slope of the embankment.

(2) For culverts 18-inch diameter and larger, the embankment around the culvert inlet shall be protected from erosion by rock lining or riprap as specified in Table 4.1, except the length shall extend at least 5 feet upstream of the culvert, and the height shall be at or above the design headwater elevation.

(3) Inlet structures, such as concrete headwalls, may provide a more economical design by allowing the use of smaller entrance coefficients and, hence, smaller diameter culverts. When properly designed, they will also protect the embankment from erosion and eliminate the need for rock lining.

(4) In order to maintain the stability of roadway embankments, concrete headwalls, wingwalls, or tapered inlets and outlets may be required if right-of-way or easement constraints prohibit the culvert from extending to the toe of the embankment slopes. All inlet structures or headwalls installed in or near roadway embankments must be flush with and conforming to the slope of the embankment.

(5) Debris barriers (trash racks) are generally not required on the inlets of all culverts except as specified by the Utility.

(6) For culverts 18-inch diameter and larger, the receiving channel of the outlet shall be protected from erosion by rock lining specified in Table 4.1, except the height shall be one foot above maximum tailwater elevation or one foot above the crown, whichever is higher (See KCSWD fig 4.2.2.A Pipe/Culvert Discharge Protection).

I. Methods of Analysis

Conveyance Capacity

The theoretical analysis of culvert capacity can be extremely complex because of the wide range of possible flow conditions that can occur due to various combinations of inlet and outlet submergence and flow regime within the culvert barrel. An exact analysis usually involves

detailed backwater calculations, energy and momentum balance, and application of the results of hydraulic model studies.

However, simple procedures have been developed where the various flow conditions are classified and analyzed on the basis of a control section. A control section is a location where there is a unique relationship between the flow rate and the upstream water surface elevation. Many different flow conditions exist over time, but at any given time the flow is either governed by the culvert's inlet geometry (inlet control) or by a combination of inlet geometry, barrel characteristics, and tailwater elevation (outlet control). Figure 4.9 illustrates typical conditions of inlet and outlet control. The procedures presented in this section provide for the analysis of both inlet and outlet control conditions to determine which governs.

Inlet Control Analysis

Nomographs such as those provided in Figure 4.10 and Figure 4.11 may be used to determine the inlet control headwater depth at design flow for various types of culverts and inlet configurations. These nomographs were originally developed by the Bureau of Public Roads—now the Federal Highway Administration (FHWA)—based on their studies of culvert hydraulics. These and other nomographs can be found in the FHWA publication Hydraulic Design of Highway Culverts, HDS No. #5 (Report No. FHWA-IP-85-15), September 1985; or the WSDOT Hydraulic Manual.

Also available in the FHWA publication, are the design equations used to develop the inlet control nomographs. These equations are presented below.

For unsubmerged inlet conditions (defined by $Q/AD^{0.5} < 3.5$);

$$\text{Form 1*:}\quad HW/D = H_c/D + K(Q/AD^{0.5})^M - 0.5S^{**} \qquad (4\text{-}4)$$

$$\text{Form 2*:}\quad HW/D = K(Q/AD^{0.5})^M \qquad (4\text{-}5)$$

For submerged inlet conditions (defined by $Q/AD^{0.5} > 4.0$);

$$HW/D = c(Q/AD^{0.5})^2 + Y - 0.5S^{**} \qquad (4\text{-}6)$$

where HW = headwater depth above inlet invert (ft)
D = interior height of culvert barrel (ft)
H_c = specific head (ft) at critical depth ($dc + Vc_2/2g$)
Q = flow (cfs)
A = full cross-sectional area of culvert barrel (sf)
S = culvert barrel slope (ft/ft)
K,M,c,Y = constants from Table 4.6

The specified head H_c is determined by the following equation:

$$H_c = d_c + V_c^2/2g \qquad (4\text{-}7)$$

where d_c = critical depth (ft); see Figure 4.14
V_c = flow velocity at critical depth (fps)
g = acceleration due to gravity (32.2 ft/sec^2).

* The appropriate equation form for various inlet types is specified in Table 4.6.

** For mitered inlets, use +0.7S instead of -0.5S.

Note: Between the unsubmerged and submerged conditions, there is a transition zone ($3.5 < Q/AD^{0.5} < 4.0$) for which there is only limited hydraulic study information. The transition zone is defined empirically by drawing a curve between and tangent to the curves defined by the unsubmerged and submerged equations. In most cases, the transition zone is short and the curve is easily constructed.

Table 4.6 Constants For Inlet Control Equations

Shape and Material	Inlet Edge Description	Unsubmerged			Submerged	
		Equation Form	*K*	*M*	*c*	*Y*
Circular Concrete	Square edge with headwall	1	0.0098	2.0	0.0398	0.67
	Groove end with headwall		0.0078	2.0	0.0292	0.74
	Groove end projecting		0.0045	2.0	0.0317	0.69
Circular CMP	Headwall	1	0.0078	2.0	0.0379	0.69
	Mitered to slope		0.0210	1.33	0.0463	0.75
	Projecting		0.0340	1.50	0.0553	0.54
Rectangular Box	30° to 75° wingwall flares	1	0.026	1.0	0.0385	0.81
	90° and 15° wingwall flares		0.061	0.75	0.0400	0.80
	0° wingwall flares		0.061	0.75	0.0423	0.82
CM Boxes	90° headwall	1	0.0083	2.0	0.0379	0.69
	Thick wall projecting		0.0145	1.75	0.0419	0.64
	Thin wall projecting		0.0340	1.5	0.0496	0.57
Arch CMP	90° headwall	1	0.0083	2.0	0.0496	0.57
	Mitered to slope		0.0300	1.0	0.0463	0.75
	Projecting		0.0340	1.5	0.0496	0.53
Bottomless Arch CMP	90° headwall	1	0.0083	2.0	0.0379	0.69
	Mitered to slope		0.0300	2.0	0.0463	0.75
	Thin wall projecting		0.0340	1.5	0.0496	0.57
Circular with Tapered Inlet	Smooth tapered inlet throat	2	0.534	0.333	0.0196	0.89
	Rough tapered inlet throat		0.519	0.64	0.0289	0.90

* Source: *FHWA HDS No. 5*

Outlet Control Analysis

Nomographs such as those provided in Figure 4.12 and Figure 4.13 may be used to determine the outlet control headwater depth at design flow for various types of culverts and inlets. Outlet control nomographs other than those provided can be found in *FHWA HDS No.5* or the *WSDOT Hydraulic Manual*.

The outlet control headwater depth may also be determined using the simple Backwater Analysis method presented in Section D4-04.9(D) for analyzing pipe system capacity. This procedure is summarized as follows for culverts:

$$HW = H + TW - LS \qquad (4\text{-}8)$$

where $H = H_f + H_e + H_{ex}$

H_f = friction loss (ft) = $(V^2 n^2 L)/(2.22R^{1.33})$

Note: If (Hf+TW-LS) < D, adjust Hf such that (Hf+TW-LS) = D. This will keep the analysis simple and still yield reasonable results (erring on the conservative side).

H_e = entrance head loss (ft) = $K_e(V^2/2g)$

H_{ex} = exit head loss (ft) = $V^2/2g$

TW = tailwater depth above invert of culvert outlet (ft)

Note: If TW < $(D+d_c)/2$, set TW = $(D+d_c)/2$. This will keep the analysis simple and still yield reasonable results.

L = length of culvert (ft)

S = slope of culvert barrel (ft/ft)

D = interior height of culvert barrel (ft)

V = barrel velocity (fps)

n = Manning's roughness coefficient from Table 4.9

R = hydraulic radius (ft)

K_e = entrance loss coefficient from Table 4.7

g = acceleration due to gravity (32.2 ft/sec^2)

d_c = critical depth (ft); see Figure 4.14

Note: The above procedure should not be used to develop stage/discharge curves for level pool routing purposes because its results are not precise for flow conditions where the hydraulic grade line falls significantly below the culvert crown (i.e., less than full flow conditions).

Table 4.7 Entrance Loss Coefficients

Type of Structure and Design Entrance	Coefficient, K_e
Pipe, Concrete, PVC, Spiral Rib, DI, and LCPE	
Projecting from fill, socket (bell) end	0.2
Projecting from fill, square cut end	0.5
Headwall, or headwall and wingwalls	
Socket end of pipe (groove-end)	0.2
Square-edge	0.5
Rounded (radius = $^1/_{12}$D)	0.2
Mitered to conform to fill slope	0.7
End section conforming to fill slope*	0.5
Beveled edges, 33.7^o or 45° bevels	0.2
Side- or slope-tapered inlet	0.2
Pipe, or Pipe-Arch, Corrugated Metal and Other Non-Concrete or D.I.	
Projecting from fill (no headwall)	0.9
Headwall, or headwall and wingwalls (square-edge)	0.5
Mitered to conform to fill slope (paved or unpaved slope)	0.7
End section conforming to fill slope*	0.5
Beveled edges, 33.7^o or 45° bevels	0.2
Side- or slope-tapered inlet	0.2
Box, Reinforced Concrete	
Headwall parallel to embankment (no wingwalls)	
Square-edged on 3 edges	0.5
Rounded on 3 edges to radius of $^1/_{12}$ barrel dimension or beveled edges on 3 sides	0.2
Wingwalls at 30° to 75° to barrel	
Square-edged at crown	0.4
Crown edge rounded to radius of $^1/_{12}$ barrel dimension or beveled top edge	0.2
Wingwall at 10° to 25° to barrel	
Square-edged at crown	0.5
Wingwalls parallel (extension of sides)	
Square-edged at crown	0.7
Side- or slope-tapered inlet	0.2

* Note: "End section conforming to fill slope" are the sections commonly available from manufacturers. From limited hydraulic tests they are equivalent in operation to a headwall in both inlet and outlet control. Some end sections incorporating a closed taper in their design have a superior hydraulic performance.

Computer Applications

The "King County Backwater" (KCBW) computer program available from King County contains two subroutines (BWPIPE and BWCULV) that may be used to analyze culvert capacity and develop stage/discharge curves for level pool routing purposes. A schematic description of the nomenclature used in these subroutines is provided in Figure 4.15. The KCBW program documentation available from King County Department of Natural Resources and Parks includes more detailed descriptions of program features.

Figure 4.9 Inlet/Outlet Control Conditions

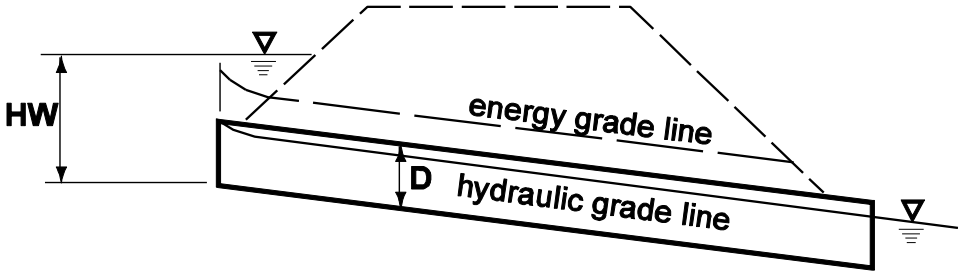

Inlet Control - Submerged Inlet

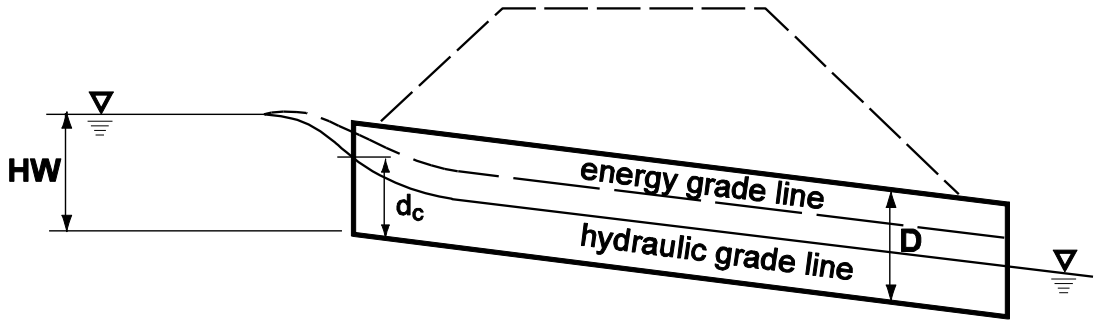

Inlet Control - Unsubmerged Inlet

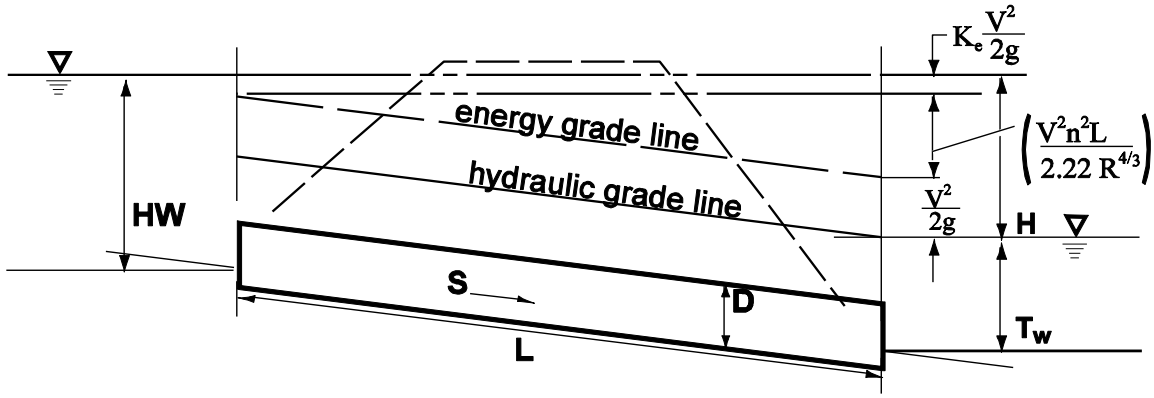

Outlet Control - Submerged Inlet and Outlet

NOTE: See FHWA no. 5 for other possible conditions

Figure 4.10 Headwater Depth For Smooth Interior Pipe Culverts With Inlet Control

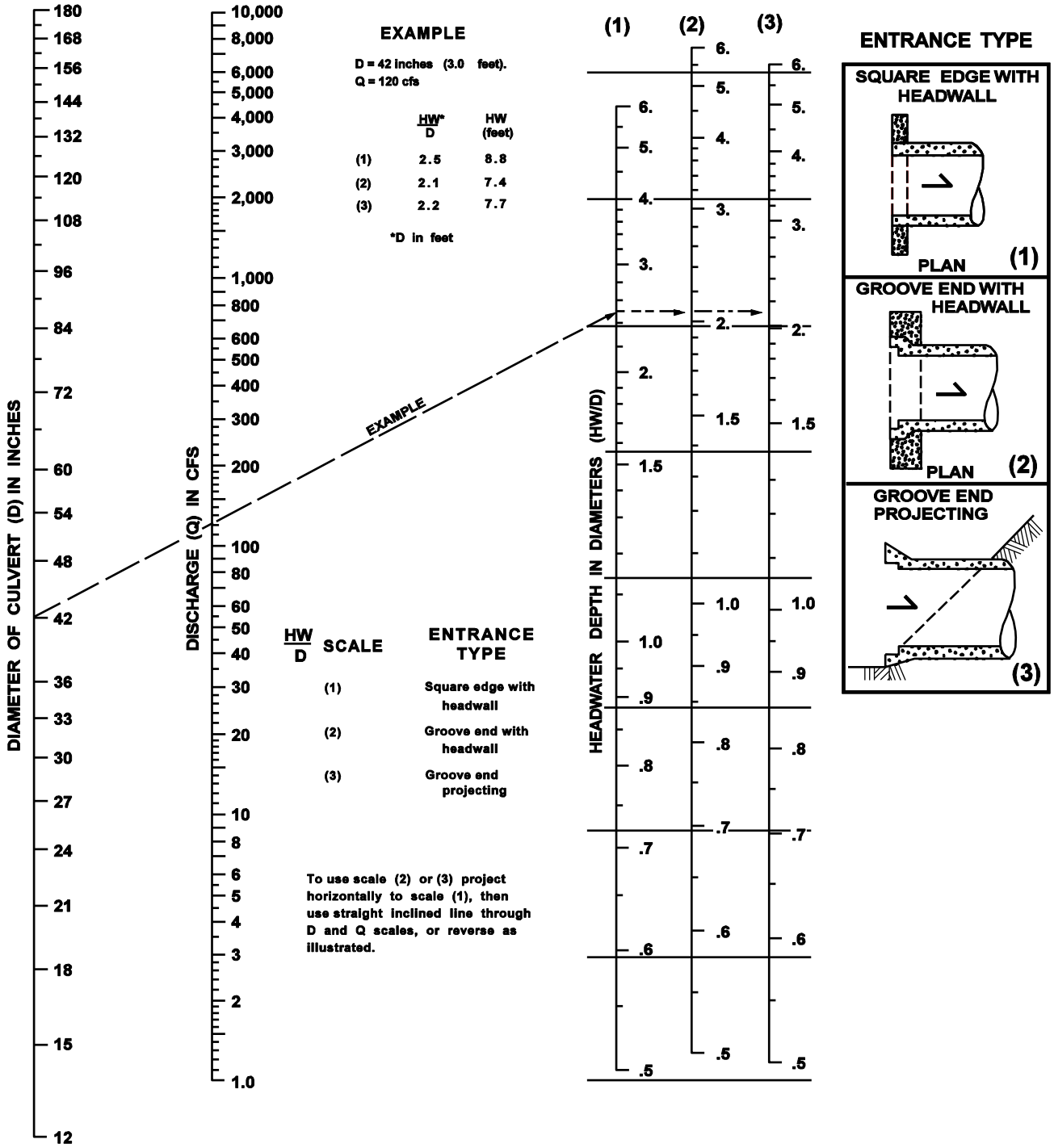

Figure 4.11 Headwater Depth For Corrugated Pipe Culverts With Inlet Control

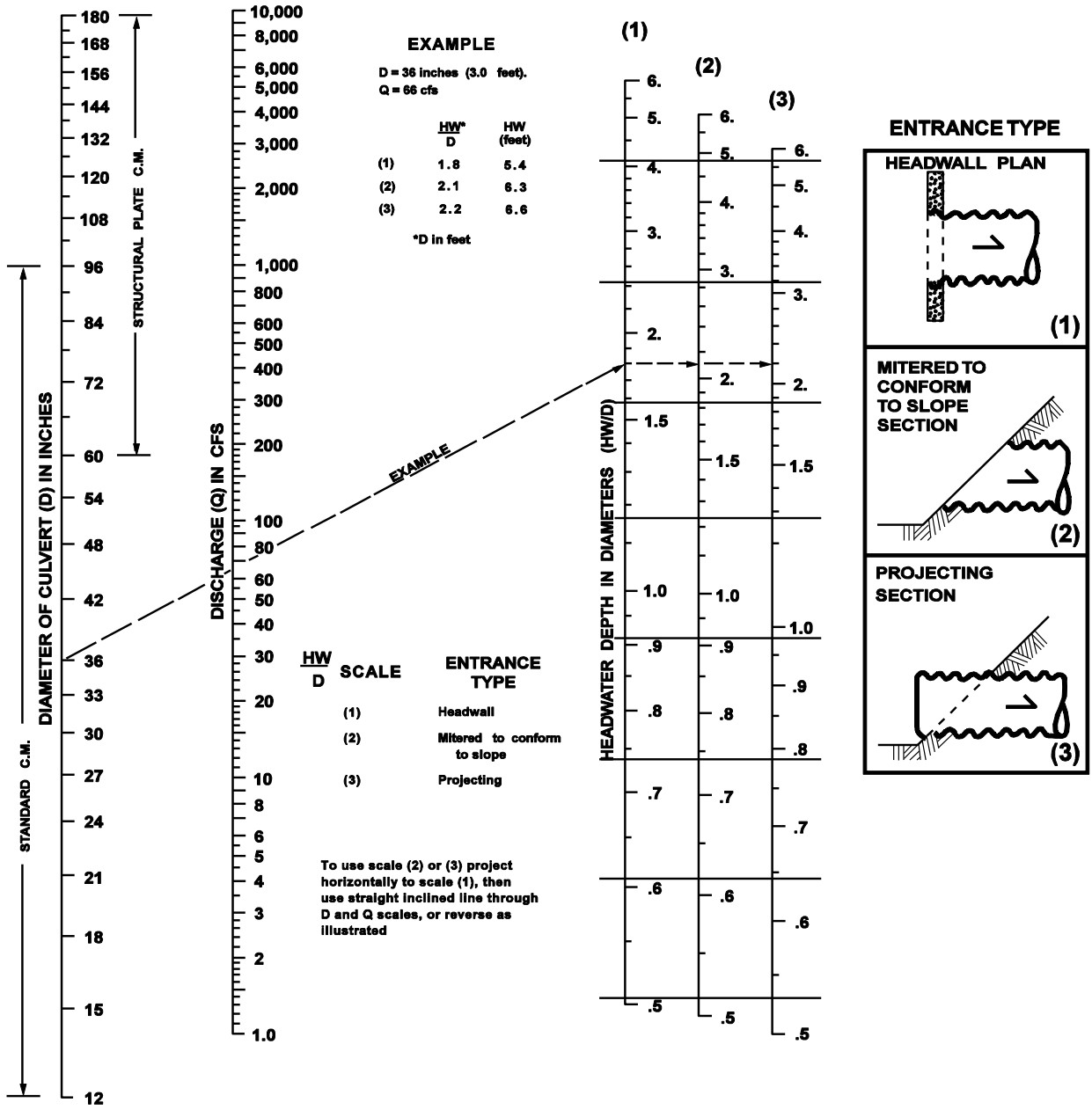

Figure 4.12 Head For Culverts (Pipe W/"*N*"= 0.012) Flowing Full With Outlet Control

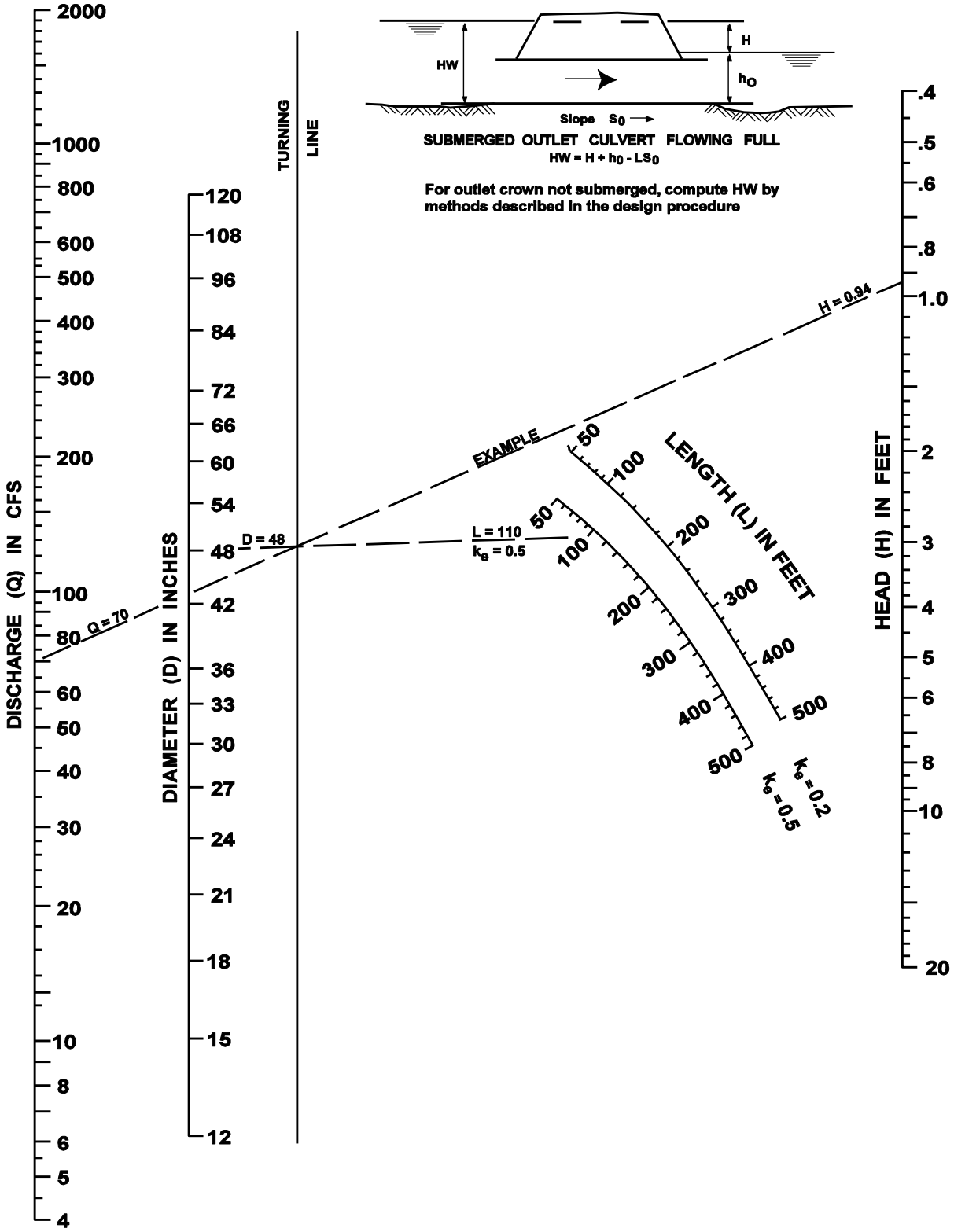

Figure 4. 13 Head For Culverts (Pipe W/"*N*"= 0.024) Flowing Full With Outlet Control

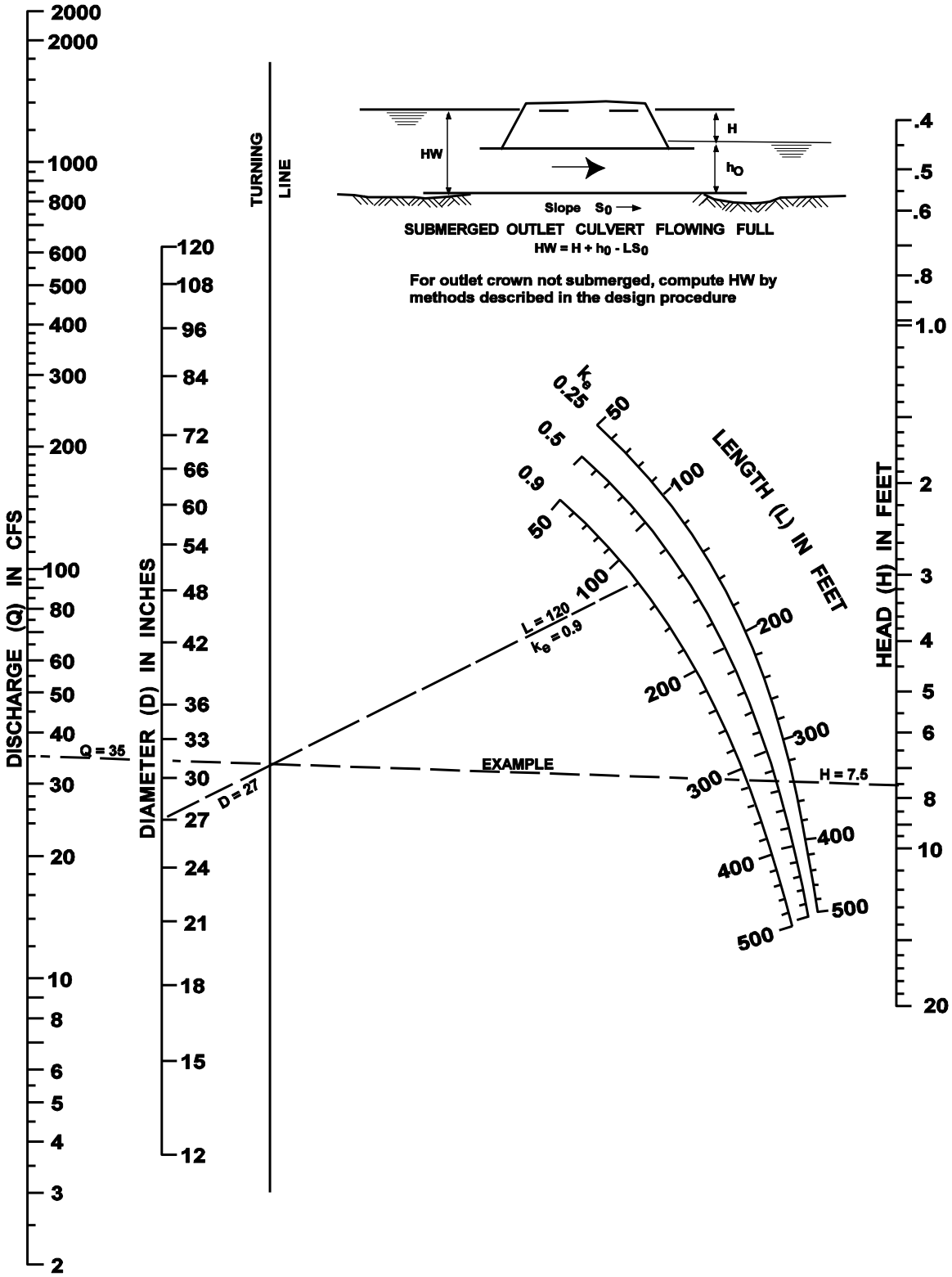

Figure 4. 14 Critical Depth Of Flow For Circular Culverts

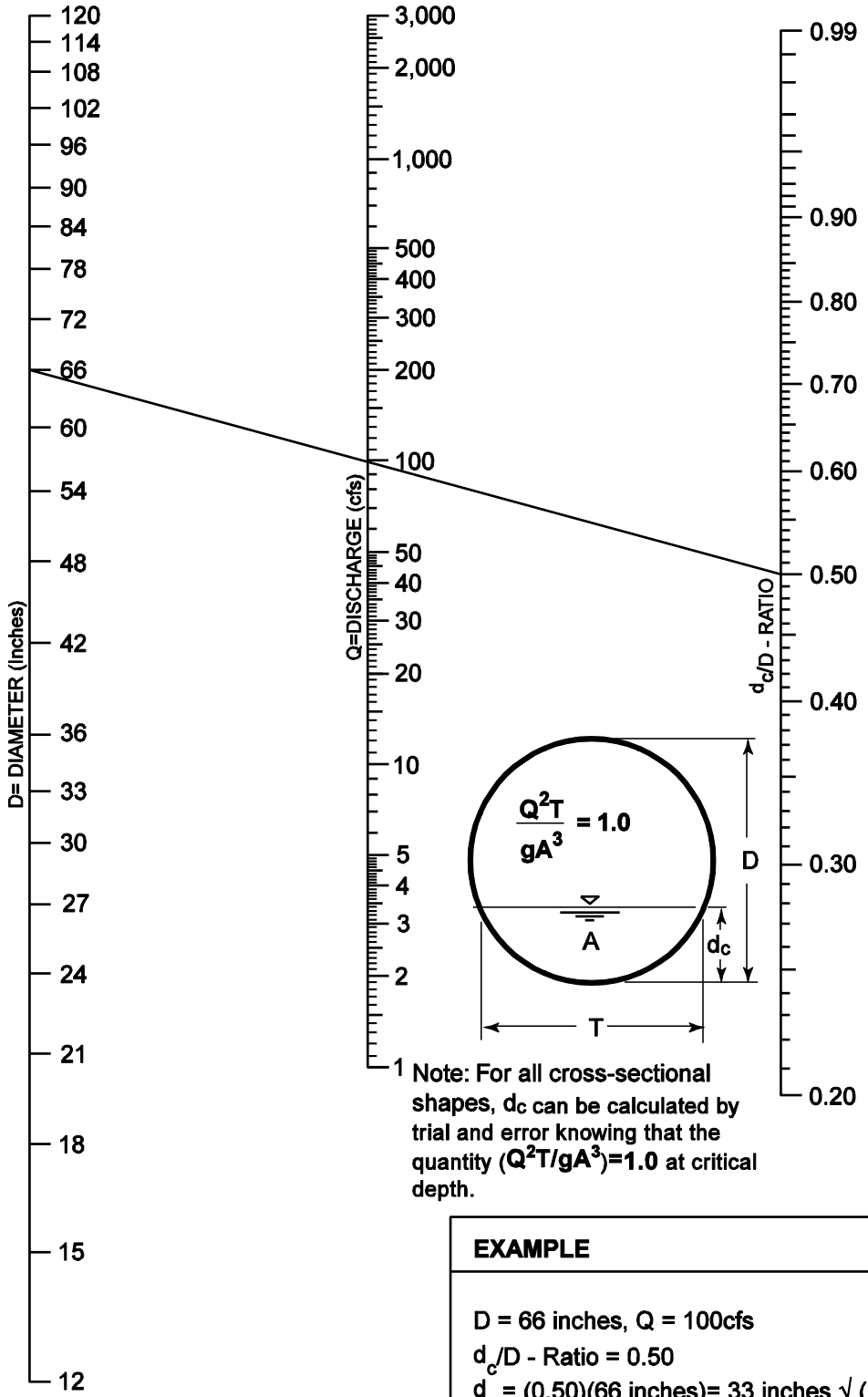

Note: For all cross-sectional shapes, d_c can be calculated by trial and error knowing that the quantity $(Q^2T/gA^3)=1.0$ at critical depth.

EXAMPLE

D = 66 inches, Q = 100cfs

d_c/D - Ratio = 0.50

d_c = (0.50)(66 inches)= 33 inches √ (12 inches/ft)

d_c= 2.75 feet

Figure 4. 15 Computer Subroutines Bwpipe And Bwculv: Variable Definitions

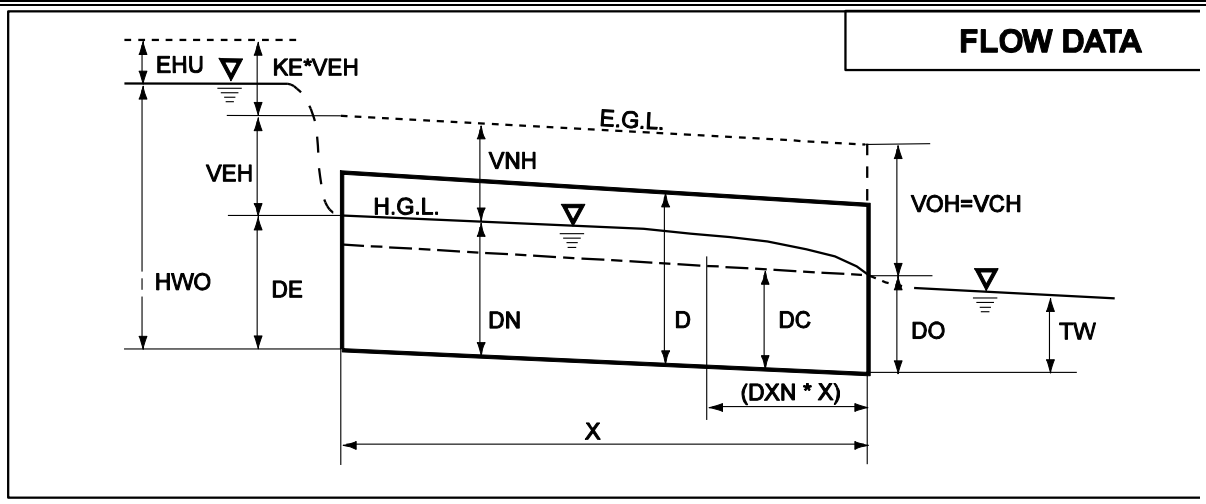

FLOW DATA	COEFFICIENTS/INLET DATA
DC -Critical Depth (ft)	**KE -Entrance Coefficient under Outlet Control**
DN -Normal Depth (ft)	**KB -Bend Loss Coefficient**
TW -Tailwater Depth (ft)	**KJ -Junction Loss Coefficient**
DO -Outlet Depth (ft)	**K -Inlet Control Equation parameter (See Table 4.6)**
DE -Entrance Depth (ft)	**M -Inlet Control Equation parameter (See Table 4.6)**
HWO -Headwater (ft) assuming Outlet Control	**C -Inlet Control Equation parameter (See Table 4.6)**
HWI -Headwater (ft) assuming Inlet Control	**Y -Inlet Control Equation parameter (See Table 4.6)**
DXN -Distance (expressed as a fraction of the pipe length) from the outlet to where the flow profile intersects with normal depth. DXN will equal one under full-flow conditions and will equal zero when a hydraulic jump occurs at the outlet or when normal depth equals zero (normal depth will equal zero when the pipe grade is flat or reversed).	**Q-Ratio Ratio of tributary flow to main upstream flow of Q3/Q1** 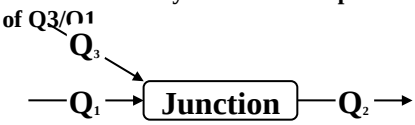
VBH -Barrel Velocity Head (ft) based on the average velocity determined by V=Q/Afull	
VUH -Upstream Velocity Head (ft) based on an inputted velocity.	
EHU -Upstream Energy Head (ft) available after bend losses and junction losses have been subtracted from VUH.	
VCH -Critical Depth Velocity Head (ft)	
VNH -Normal Depth Velocity Head (ft)	
VEH -Entrance Depth Velocity Head (ft)	
VOH -Outlet Depth Velocity Head (ft)	

D4-04.8 Culverts Providing for Fish Passage/Migration

General

In fish-bearing waters, water-crossing structures must usually provide for fish passage as required for Washington State Department of Fish and Wildlife (WDFW) Hydraulic Project Approval or as a condition of permitting under Bellevue's Critical Areas regulations (BCC 20.25H).

Fish passage can generally be ensured by providing structures that do not confine the streambed—that is, a structure wide enough so that the stream can maintain its natural channel within the culvert. Bridges, bottomless arch culverts, arch culverts, and rectangular box culverts ("utility vaults") can often be used to accommodate stream channels.

Where it is unfeasible to construct these types of structures, round pipe culverts may be used if high flow velocities are minimized and low flow depths are maximized. The Hydraulic Code Rules (Title 220 WAC) detail requirements for WDFW Hydraulic Project Approval. See the WDFW manual "Design of Road Culverts for Fish Passage" for detailed design methodologies.

A. Materials

Galvanized metals leach zinc into the environment, especially in standing water situations. High zinc concentrations, sometimes in the range that can be toxic to aquatic life, have been observed in the region. Therefore, use of galvanized materials in stormwater facilities and conveyance systems is discouraged. Where other metals, such as aluminum or stainless steel, or plastics are available, they should be used. See Materials, D7-02.

B. Design Criteria

Table 4.8 (from Title 220 WAC) lists allowable velocities, flow depths, and hydraulic drops for culverts in fish-bearing streams. Velocities are for the high flow design discharge; water depths are for the low flow design discharge. The hydraulic drop (a vertical drop in the water surface profile at any point within culvert influence) is for all flows between the high and low flow design discharges.

Table 4.8 Fish Passage Design Criteria

	Adult Trout	Adult Pink, Chum Salmon	Adult Chinook, Coho, Sockeye, Steelhead
1. Max Velocity (fps)			
Culvert Length:			
10-60 ft	4.0	5.0	6.0
60-100 ft	4.0	4.0	5.0
100-200 ft	3.0	3.0	4.0
2. Min Flow Depth (ft)	0.8	0.8	1.0
3. Max Hydraulic Drop (ft)	0.8	0.8	1.0

C. Methods of Analysis

High Flow Design Discharge

The high flow design discharge shall be estimated by one of the following:

The 10% exceedance flow for October through April inclusive for the nearest hydrologically similar gauged stream, proportioned by tributary area

The 5% exceedance flow determined through duration analysis with an approved continuous model

The 10% exceedance flow for October through April inclusive determined with an approved continuous model using the full historical record for SeaTac rainfall region, Bellevue Adjustment factor = 1.065.

Low Flow Design Discharge

The low flow design discharge shall be estimated by one of the following:

The 95% exceedance flow for October through April inclusive for the nearest hydrologically similar gaged stream, proportioned by tributary area

The 95% exceedance flow for October through April inclusive, determined by an approved continuous model using the full historical record for SeaTac rainfall region, adjusted for Bellevue

If using KCRTS input data:

For the Sea-Tac rainfall region:

$$Q_l = f_r\,(0.46A_{tf} + 0.56A_{tp} + 0.46A_{tg} + 0.72A_{of} + 0.96A_{op} + 1.10A_{og}) / 1000 \qquad (4\text{-}9)$$

where Q_l = low flow design discharge (cfs)
f_r = regional rainfall scale factor (For Bellevue, 1.065)
A_{tf} = area of till forest (acres)
A_{tp} = area of till pasture (acres)
A_{tg} = area of till grass (acres)
A_{of} = area of outwash forest (acres)
A_{op} = area of outwash pasture (acres)
A_{og} = area of outwash grass (acres)

Note: Minimum depths may also be met by providing an "installed no-flow depth," per Title 220 WAC, where the static water surface level meets minimum flow depth criteria.

D4-04.9 Storm Drains

A. General

Storm drains shall be provided for curb street sections in accordance with the structure spacing requirements set forth in Section D4-05.2 herein.

Where trench lines may convey groundwater, seepage barriers shall be installed.

Catch basins or manholes are required when joining pipes of different materials (does not apply to "taps") and joining pipes of different slopes. Vertical bends are not permitted.

If a vertical bend in a storm system is proposed by the Designer, is found to conform to Section S3-04 (N) of the sewer section of these Engineering Standards, and is approved by the City, then the system must be designed for video camera inspection and be videotaped and pass inspection at the cost of the Developer before construction acceptance.

B. Freeboard Requirements

Design conveyance systems shall have non-pressurized (non-surcharged) flow during the 100-year design storm; except that the last pipe run upstream of a detention facility or open outfall (into a stream or lake) may be inundated during the 100-year event to a maximum distance of 200 linear feet, and if all the other conditions of the Engineering Standards are met. This also applies for outfalls into streams where the outfall elevation is set at the bank-full water surface elevation (2-year storm) according to D4-02(B)

C. Design Flows

Design flows for sizing or assessing the capacity of pipe systems shall be determined using the hydrologic analysis methods described in Chapter 3 – Hydrologic Analysis.

D. Conveyance Capacity

Two methods of hydraulic analysis are used sequentially for the design and analysis of pipe systems. First, either the Rational Method or the Uniform Flow Analysis method is used for calculating the design flow rates that are used for the preliminary sizing of new pipe systems. Second, the Backwater Analysis method is used to analyze both proposed and existing pipe systems to verify adequate capacity.

Note: Use of the Uniform Flow Analysis method or the Rational Method to determine preliminary pipe sizes is only suggested as a first step in the design process; it is not required. Results of the Backwater Analysis method determine final pipe sizes in all cases.

Uniform Flow Analysis Method

This method is used for preliminary sizing of new pipe systems to convey the *design flow* (i.e., the 100-year peak flow rate.)

Assumptions:

Flow is uniform in each pipe (i.e., depth and velocity remain constant throughout the pipe for a given flow).

Friction head loss in the pipe barrel alone controls capacity. Other head losses (e.g., entrance, exit, junction, etc.) and any backwater effects or inlet control conditions are not specifically addressed.

Each pipe within the system is sized and sloped such that its barrel capacity at normal full flow (computed by Manning's equation) is equal to or greater than the design flow. The nomograph in Figure 4.16 may be used for an approximate solution of Manning's equation. For more precise results, or for partial pipe full conditions, solve Manning's equation directly:

$$V = \frac{1.49}{n} R^{2/3} S^{1/2} \tag{4-10}$$

or use the continuity equation, $Q = AV$, such that:

$$Q = \frac{1.49}{n} A R^{2/3} S^{1/2} \tag{4-11}$$

Where: Q = discharge (cfs)
V = velocity (fps)
A = area (sf)
n = Manning's roughness coefficient; see Table 4.9
R = hydraulic radius = area/wetted perimeter (ft)
S = slope of the energy grade line (ft/ft)

For pipes flowing partially full, the actual velocity may be estimated from the hydraulic properties shown in Figure 4.17 by calculating Q_{full} and V_{full} and using the ratio Q_{design}/Q_{full} to find V and d (depth of flow).

Table 4.9 provides the recommended Manning's "n" values for preliminary design using the Uniform Flow Analysis method for pipe systems. *Note: The "n" values for this method are 15% higher in order to account for entrance, exit, junction, and bend head losses.*

Table 4.9 Manning's "N" Values for Pipes

Type of Pipe Material	Analysis Method	
	Uniform Flow (Preliminary design)	Backwater Flow (Capacity Verification)
A. Concrete pipe and LCPE pipe	0.014	0.012
B. Annular Corrugated Metal Pipe or Pipe Arch:		
1. 2-$^{2}/_{3}$" x $^{1}/_{2}$" corrugation (riveted):		
a. plain or fully coated	0.028	0.024
b. paved invert (40% of circumference paved):		
1) flow at full depth	0.021	0.018
2) flow at 80% full depth	0.018	0.016
3) flow at 60% full depth	0.015	0.013
c. treatment 5	0.015	0.013
2. 3" x 1" corrugation	0.031	0.027
3. 6" x 2" corrugation (field bolted)	0.035	0.030
C. Helical 2-$^{2}/_{3}$" x $^{1}/_{2}$" corrugation and CPE pipe	0.028	0.024
D. Spiral rib metal pipe and PVC pipe	0.013	0.011
E. Ductile iron pipe cement lined	0.014	0.012
F. SWPE pipe (butt fused only)	0.009	0.009

Backwater Analysis Method

This method is used to analyze the capacity of both new and existing pipe systems to convey the 100-year peak flow. Pipe system structures must be demonstrated to contain the headwater surface (hydraulic grade line) for the specified peak flow rate. Structures may not overtop for the 100-year peak flow.

This method is used to compute a simple backwater profile (hydraulic grade line) through a proposed or existing pipe system for the purposes of verifying adequate capacity. It incorporates a re-arranged form of Manning's equation expressed in terms of friction slope (slope of the energy grade line in ft/ft). The friction slope is used to determine the head loss in each pipe segment due to barrel friction, which can then be combined with other head losses to obtain water surface elevations at all structures along the pipe system.

The backwater analysis begins at the downstream end of the pipe system and is computed back through each pipe segment and structure upstream. The friction, entrance, and exit head losses computed for each pipe segment are added to that segment's tailwater elevation (the water surface elevation at the pipe's outlet) to obtain its outlet control headwater elevation. This elevation is then compared with the inlet control headwater elevation; computed assuming the pipe's inlet alone is controlling capacity using the methods for inlet control presented in Section D4-04.7(J). The condition that creates the highest headwater elevation determines the pipe's capacity. The approach velocity head is then subtracted from the controlling headwater elevation and the junction and bend head losses are added to compute the total headwater elevation, which is then used as the tailwater elevation for the upstream pipe segment.

The Backwater Calculation Sheet in Figure 4.18 may be used to compile the head losses and headwater elevations for each pipe segment. The numbered columns in Figure 4.18 are described in Figure 4.19. An example calculation is performed in Figure 4.19.

Note: This method should not be used to compute stage/discharge curves for level pool routing purposes. Instead, a more sophisticated backwater analysis using the computer software provided with this manual is recommended as described below.

Computer Applications

The King County Backwater (KCBW) computer program includes a subroutine BWPIPE, which may be used to quickly compute a family of backwater profiles for a given range of flows through a proposed or existing pipe system. A schematic description of the nomenclature used in this program is provided in Figure 4.15. Program documentation providing instructions on the use of this and the other KCBW subroutines is available from King County Department of Natural Resources and Parks.

Figure 4.16 Nomograph For Sizing Circular Drains Flowing Full

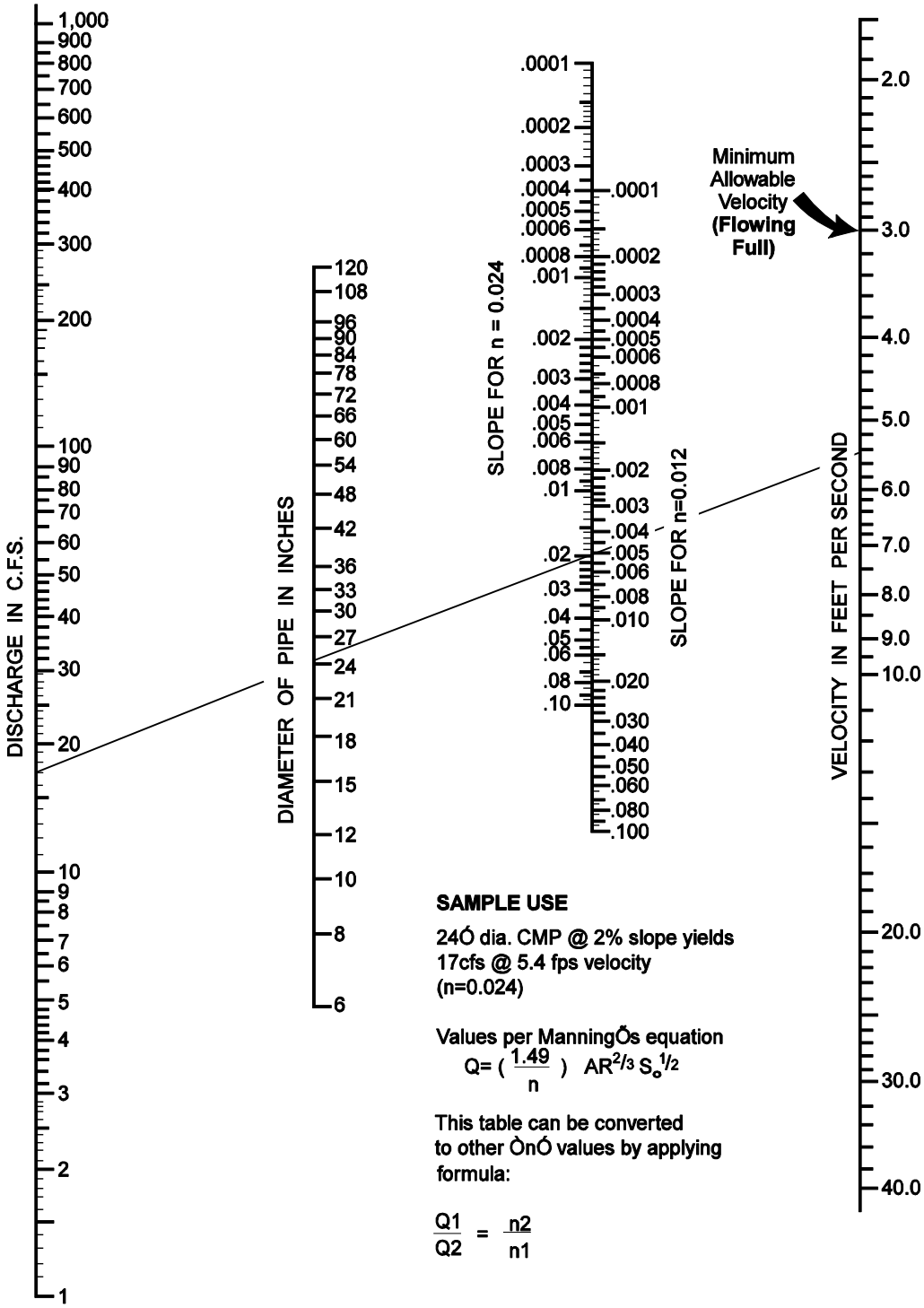

Figure 4.17 Circular Channel Ratios

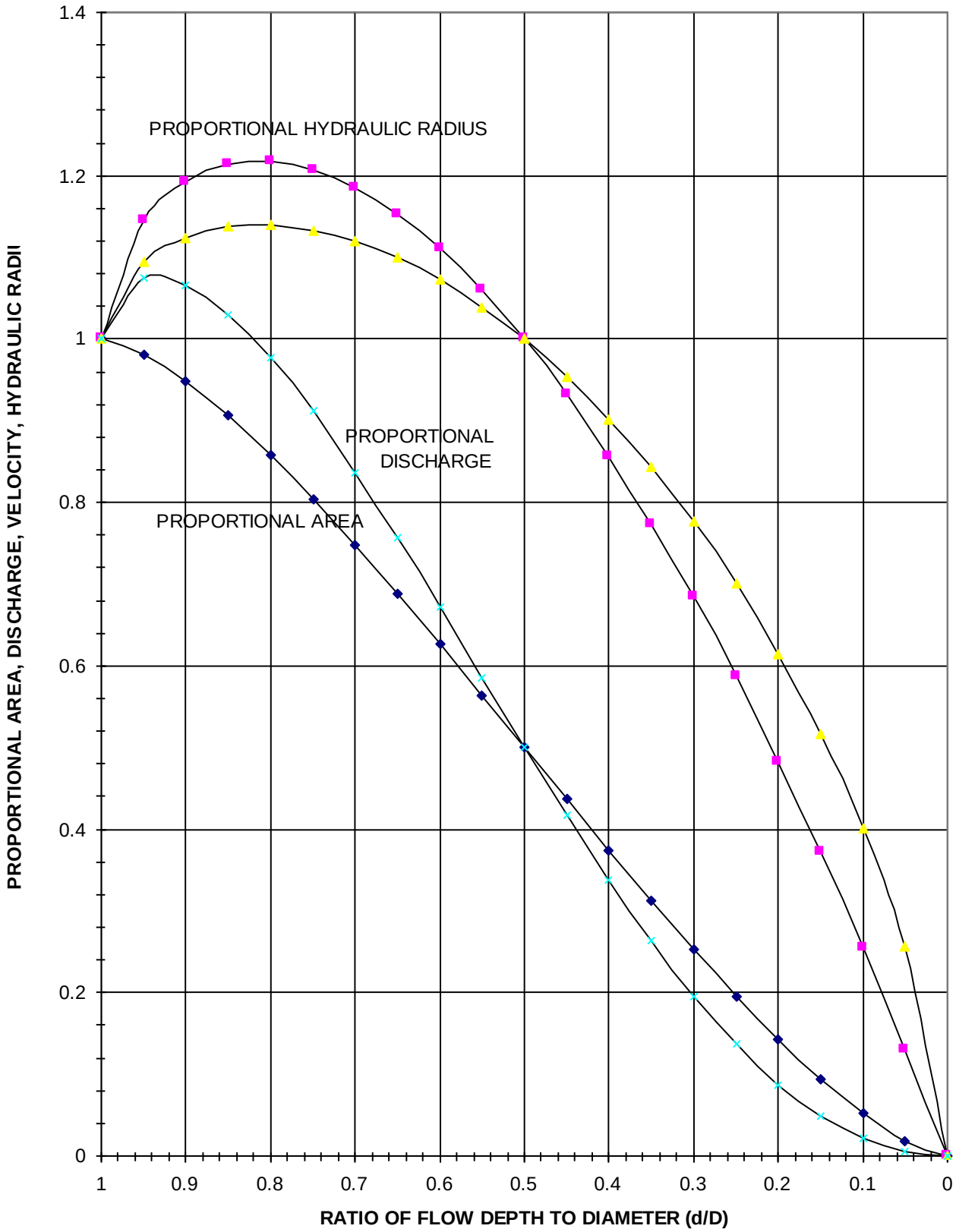

Figure 4.18 Backwater Calculation Sheet

Pipe Segment CB to CB	(1) Q (cfs)	(2) Lngth (ft)	(3) Pipe Size	(4) ÒnÓ Value	(5) Outlet Elev (ft)	(6) Inlet Elev (ft)	(7) Barrel Area (sq. ft)	(8) Barrel Vel (fps)	(9) Barrel Vel Head (ft)	(10) TW Elev (ft)	(11) Fric-tion Loss (ft)	(12) Entr HGL Elev (ft)	(13) Entr Head Loss (ft)	(14) Exit Head Loss (ft)	(15) Outlt Cntrl Elev (ft)	(16) Inlet Cntrl Elev (ft)	(17) Appr Vel Head (ft)	(18) Bend Head Loss (ft)	(19) Junc Head Loss (ft)	(20) HW Elev (ft)

Figure 4.18 Backwater Calculation Sheet Notes

Column (1) - Design flow to be conveyed by pipe segment.

Column (2) - Length of pipe segment.

Column (3) - Pipe Size; indicate pipe diameter or span x rise.

Column (4) - Manning's "*n*" value.

Column (5) - Outlet Elevation of pipe segment.

Column (6) - Inlet Elevation of pipe segment.

Column (7) - Barrel Area; this is the full cross-sectional area of the pipe.

Column (8) - Barrel Velocity; this is the full velocity in the pipe as determined by:
$V = Q/A$ or Col.(8) = Col.(1) / Col.(7)

Column (9) - Barrel Velocity Head = $V^2/2g$ or $(\text{Col.}(8))^2/2g$
where g = 32.2 ft/sec (acceleration due to gravity)

Column (10) - Tailwater (*TW*) Elevation; this is the water surface elevation at the outlet of the pipe segment. If the pipe's outlet is not submerged by the *TW* and the *TW* depth is less than $(D+d_c)/2$, set TW equal to $(D+d_c)/2$ to keep the analysis simple and still obtain reasonable results (D = pipe barrel height and d_c = critical depth, both in feet. See Figure 4. 14 for determination of d_c).

Column (11) - Friction Loss = Sf x L [or Sf x Col.(2)]
where Sf is the friction slope or head loss per linear foot of pipe as determined by Manning's equation expressed in the form: $Sf = (nV)^2/2.22\ R^{1.33}$

Column (12) - Hydraulic Grade Line (HGL) Elevation just inside the entrance of the pipe barrel; this is determined by adding the friction loss to the TW elevation: Col.(12) = Col.(11) + Col.(10)

If this elevation falls below the pipe's inlet crown, it no longer represents the true HGL when computed in this manner. The true HGL will fall somewhere between the pipe's crown and either normal flow depth or critical flow depth, whichever is greater. To keep the analysis simple and still obtain reasonable results (i.e., erring on the conservative side), set the HGL elevation equal to the crown elevation.

Column (13) - Entrance Head Loss = Ke x $V^2/2g$ [or Ke x Col.(9)] where Ke = Entrance Loss Coefficient (from Table 4.7). This is the head lost due to flow contractions at the pipe entrance.

Column (14) - Exit Head Loss = 1.0 x $V^2/2g$ or 1.0 x Col.(9)

This is the velocity head lost or transferred downstream.

Column (15) - Outlet Control Elevation = Col.(12) + Col.(13) + Col.(14)

This is the maximum headwater elevation assuming the pipe's barrel and inlet/outlet characteristics are controlling capacity. It does not include structure losses or approach velocity considerations.

Column (16) - Inlet Control Elevation (see SectionD4-04.7(J), for computation of inlet control on culverts); this is the maximum headwater elevation assuming the pipe's inlet is controlling capacity. It does not include structure losses or approach velocity considerations.

Column (17) - Approach Velocity Head; this is the amount of head/energy being supplied by the discharge from an upstream pipe or channel section, which serves to reduce the headwater elevation. If the discharge is from a pipe, the approach velocity head is equal to the barrel velocity head computed for the upstream pipe. If the upstream pipe outlet is significantly higher in elevation (as in a drop manhole) or lower in elevation such that its discharge energy would be dissipated, an approach velocity head of zero should be assumed.

Column (18) - Bend Head Loss = Kb x $V^2/2g$ [or Kb x Col.(17)]
where Kb = Bend Loss Coefficient (from Figure 4.20). This is the loss of head/energy required to change direction of flow in an access structure.

Column (19) - Junction Head Loss. This is the loss in head/energy that results from the turbulence created when two or more streams are merged into one within the access structure. Figure 4.21 may be used to determine this loss, or it may be computed using the following equations derived from Figure 4.21:

Junction Head Loss = Kj x $V^2/2g$ [or Kj x Col.(17)]

where Kj is the Junction Loss Coefficient determined by:

$$Kj = (Q3/Q1)/(1.18 + 0.63(Q3/Q1))$$

Column (20) - Headwater (HW) Elevation; this is determined by combining the energy heads in Columns 17, 18, and 19 with the highest control elevation in either Column 15 or 16, as follows:
Col.(20) = Col.(15 or 16) - Col.(17) + Col.(18) + Col.(19)

Figure 4.19 Backwater Calculation Example

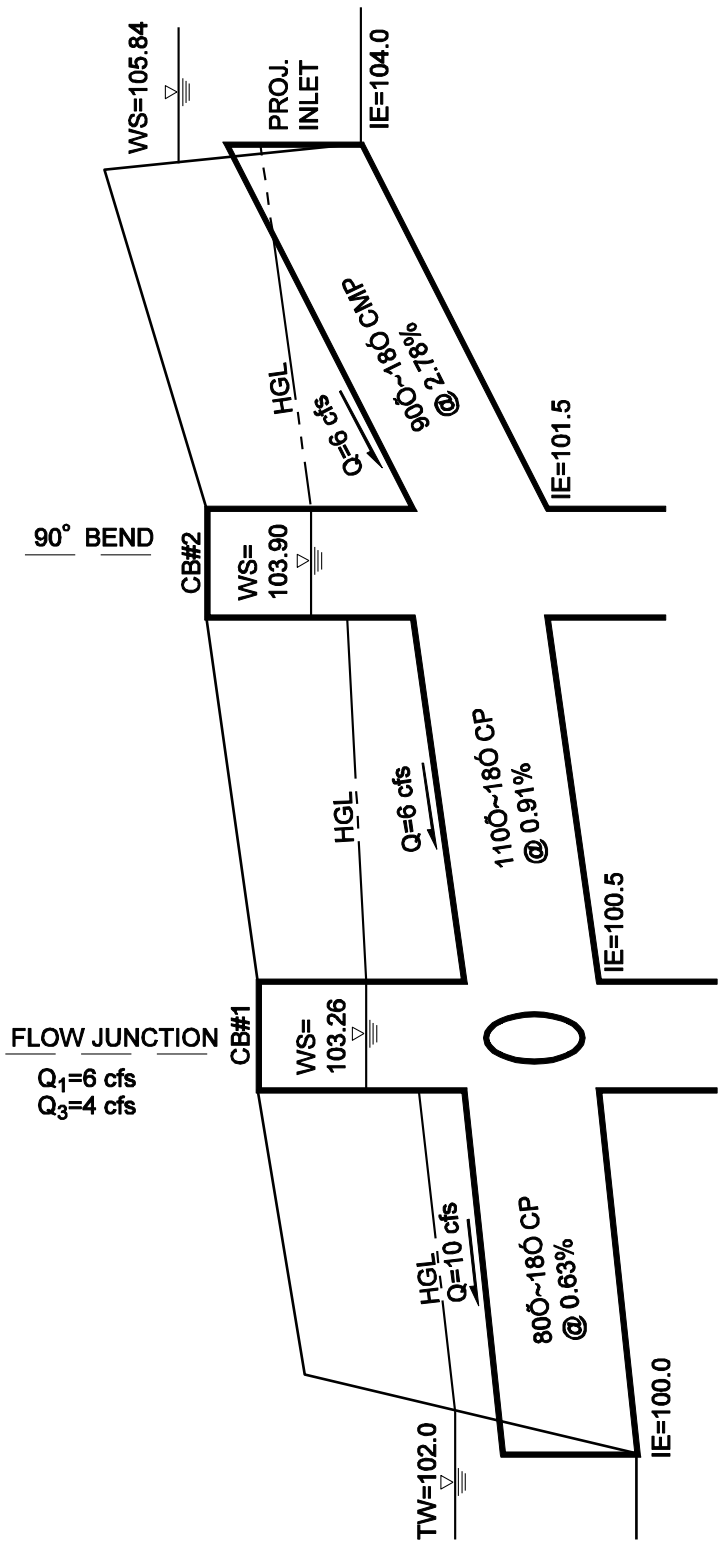

BACKWATER CALCULATION SHEET

Select the greater elevation

Pipe Segment CB to CB		(1) Q (cfs)	(2) Length (ft)	(3) Pipe Size	(4) ÒnÓ Value	(5) Outlet Elev (ft)	(6) Intlet Elev (ft)	(7) Barrel Area (sqft)	(8) Barrel Vel (fps)	(9) Barrel Vel Head (ft)	(10) TW Elev (ft)	(11) Fric-tion Loss (ft)	(12) Entr HGL Elev (ft)	(13) Entr Head Loss (ft)	(14) Exit Head Loss (ft)	(15) Outlt Contr Elev (ft)	(16) Inlet Contr Elev (ft)	(17) Appr Vel Head (ft)	(18) Bend Head Loss (ft)	(19) Junc Head Loss (ft)	(20) HW Elev (ft)
Out fall	1	10	80	18Ó	0.012	100.00	100.50	1.77	5.65	0.50	102.00	0.62	102.62	0.25	0.50	103.37	102.75	-0.18	0.002	0.07	103.26
1	2	6	110	18Ó	0.012	100.50	101.50	1.77	3.39	0.18	103.26	0.31	103.57	0.09	0.18	103.84	102.95	-0.18	0.24	0.0	103.90
2	Inlet	6	90	18Ó	0.024	101.50	104.00	1.77	3.39	0.18	103.90	1.00	(104.9) 105.5	0.16	0.18	105.84	105.80	-0.0	0.0	0.0	105.84

Figure 4.20 Bend Head Losses In Structures

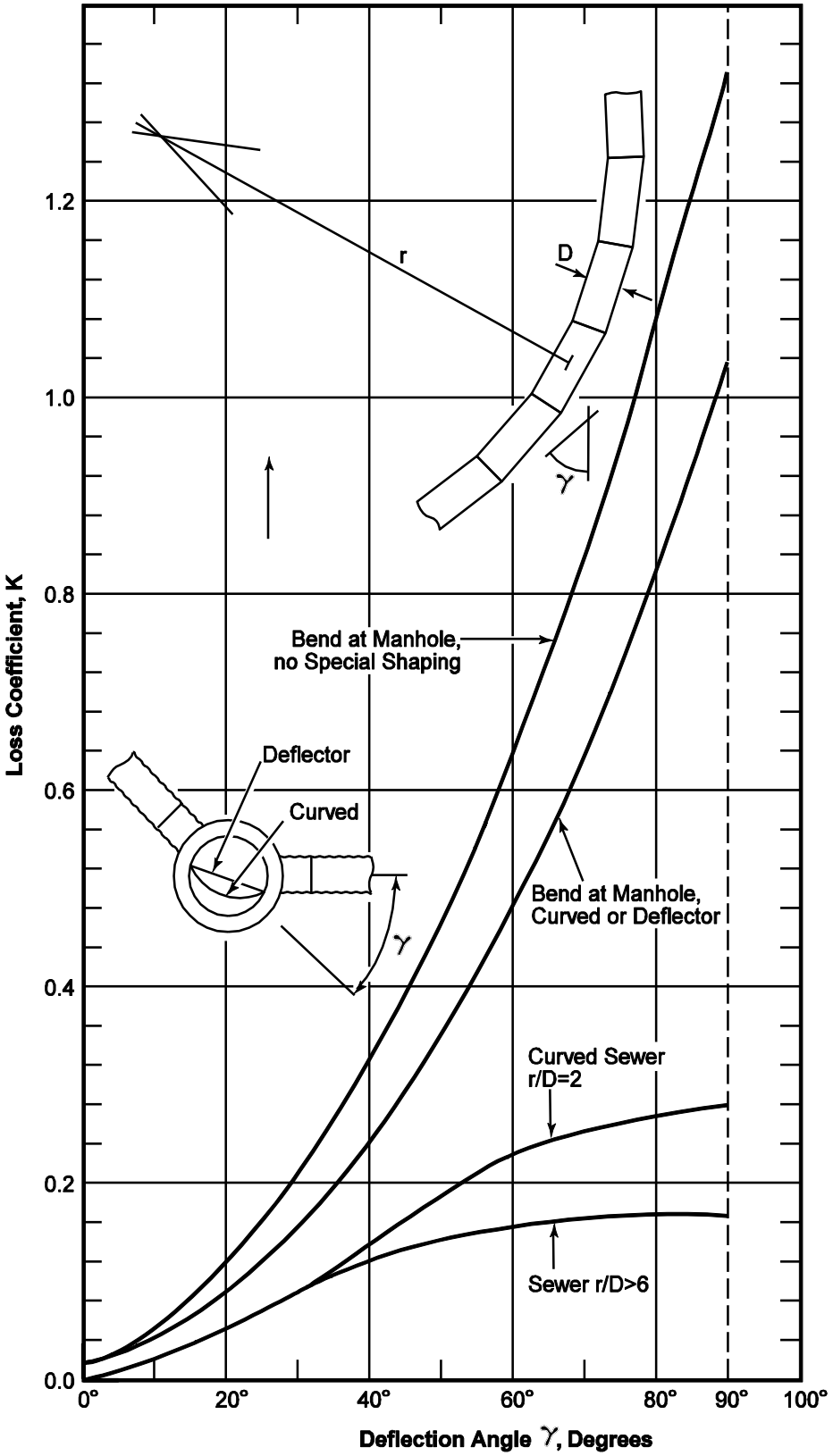

Figure 4.21 Junction Head Loss In Structures

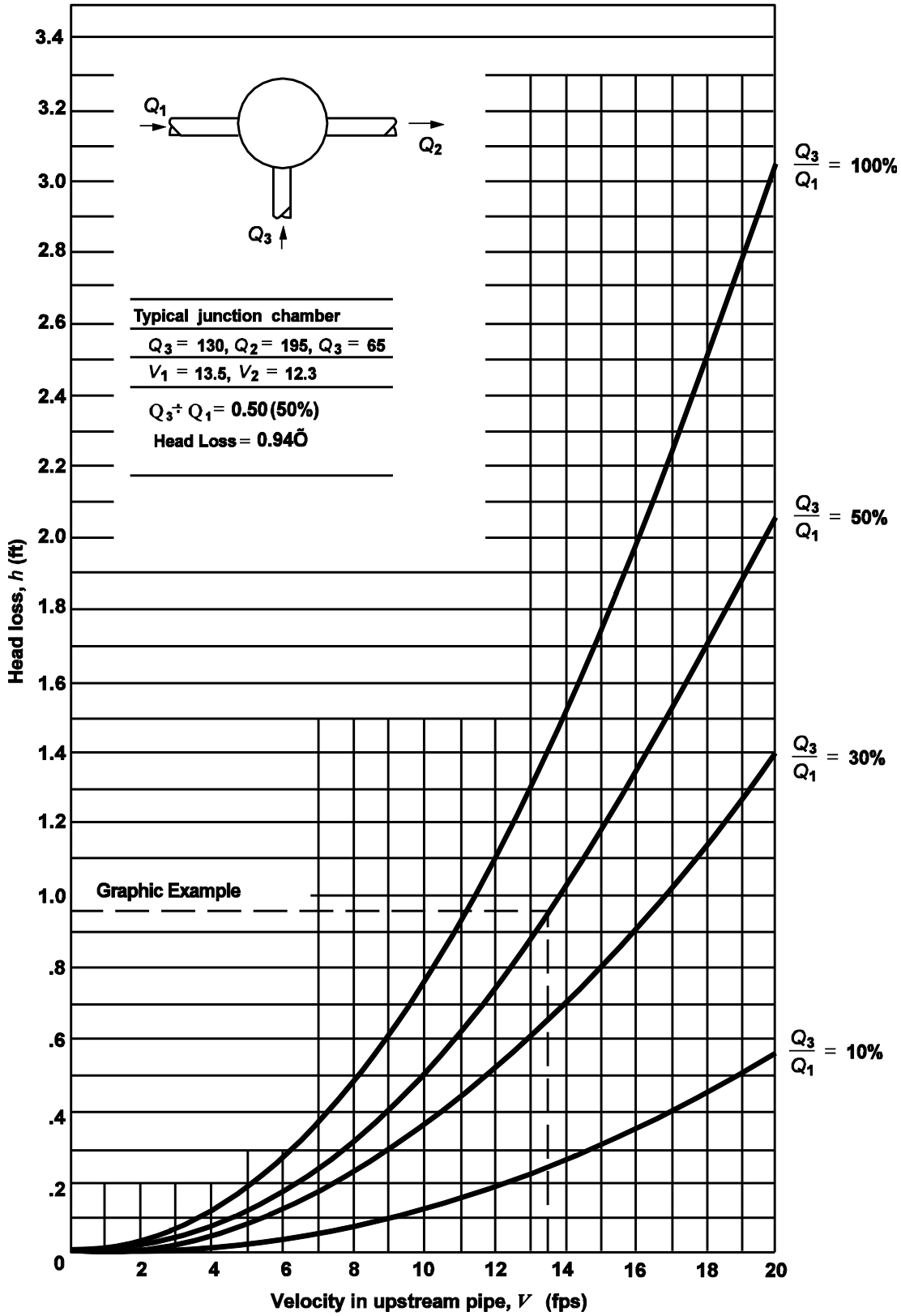

Pipe System Analysis and Sizing with the Rational Method

Figure 4.22 has been provided to allow for the tabular computation of "C-A" values used in sizing a new pipe system. Following computation of the time of concentration to the first structure, where flow enters the proposed pipe system, the travel times through the pipe lengths are added to become the Tc for the design flow at the next downstream pipe run. The flows computed at structures (manholes and catch basins) may be used to estimate the water surface profile along the pipe system. See Section D3-02.3 for additional information on rational method computational methods.

CONVEYANCE SYSTEM ANALYSIS AND SIZING TABLE USING THE RATIONAL METHOD

Location		Sub Basin Number	Area (ac)	C	C-A	Sum C-A	T_c min	i_R	I_R	Q_R cfs	Pipe in	Typ n	Slope ft/ft	Q_F pipe full	V pipe ful	V at Q_R	L ft	T_t min
From	To																	

E. Minimum Diameter, Slope and Velocity

Minimum slope for conveyance pipes shall be 0.5% unless specified otherwise herein. Minimum diameter for a conveyance pipes in a roadway shall be 12-inches except for roadway laterals and pipes connecting private drainage systems or wall drains to the drainage system.

For roadway laterals, the minimum diameter is 8-inches provided:

- Length of pipe does not exceed 100 feet;
- Pipe slope is greater than or equal to 2%;and
- Only one stormwater inlet contributes surface runoff to the roadway lateral.

For individual single family residences, conveyance pipes for roof, footing, and yard drains shall be a minimum of 4-inches in diameter. Connections to the storm drain system shall be a minimum of 6-inches once outside the lot being connected. For joint-use lines between single family homes, that portion of the line which is jointly used shall be 6-inches in diameter minimum. Minimum slopes for single family storm drain lines (footing and conveyance): 2% on 4-inch and 6-inch diameter, and 0.5% on 8-inch diameter (if used). The minimum velocity in all storm drain conveyance systems for the conveyance design storm (100-year, 24-hour) is 3 feet per second.

For driveways, parking lots and situations not listed above, the minimum diameter for conveyance pipes shall be 8-inches.

Any storm line with a 20% slope or greater shall provide pipe anchors and hill holders according to the applicable storm drainage standard details.

F. Maintenance Access

All stormwater facilities shall be accessible for maintenance and operation.

When vehicle access is necessary, access roads shall be provided in dedicated tracts or dedicated access easements. The minimum clear driving lane width is 12 feet.

Gates and/or bollards are required when necessary to restrict access to stormwater facilities. Such measures shall comply with the Land Use Code and these engineering standards. Cables and/or chains stretched across access roads are not acceptable.

D4-04.10 Private Drainage Systems

When a new plat is developed and contains a portion of public right-of-way, the flow control facility located in the public right-of-way, tract or easement is owned and maintained by the City of Bellevue. The flow control or other storm water facility will only be public if the area drained from the public right-of-way is new right-of-way created as part of the plat.

D4-04.11 Private Single Family Drainage Systems

A. General

Private drainage systems shall comply with all criteria for stormwater systems set forth herein unless specifically exempted.

When MR5 (On-site Stormwater Management) applies, first evaluate and implement all feasible on-site stormwater management practices as described in Chapter D6. For any remaining

impervious areas not fully managed by on-site practices, connect stormwater outfalls as described herein.

In areas having an existing piped conveyance system, the stormwater outfalls for parking lot, driveway, and roadway drainage shall be made by the following (in order of preference):

(1) Connecting the conveyance pipeline to an existing manhole or catch basin; or

(2) Constructing a new manhole or catch basin on the existing storm drainage pipeline and connecting the conveyance pipeline to this new structure.

In areas having an existing piped conveyance system, the stormwater outfalls for roof, footing, and yard drains may be made by the two methods mentioned above or by the following (in order of preference):

(1) Connecting the private drainage pipe to an existing storm drain manhole, catch basin or stub-out if provided within 100 feet and downslope of the property line; or

(2) Tapping the abutting conveyance pipeline and installing a saddle tee and providing a clean-out outside of the public right-of-way; or

(3) Tapping the abutting profile wall conveyance pipeline and installing an insert tee and clean-out outside of the right-of-way; or tapping the abutting concrete conveyance pipeline with a hole-cut by a core drill and installing a saddle.

Note: Blind tapping of corrugated metal pipe (CMP) is never allowed.

(4) Installing a tee fitting in the abutting conveyance pipeline and providing a clean-out outside of the public right-of-way; or

(5) Connecting the private drainage pipe to an existing sidewalk drain; or

(6) Providing a new sidewalk drain if the closest existing drainage system or stub-out is greater than 100 feet and downslope of the property line.

(7) Outfalling to an open channel or stream, provided that the drainage path continues downstream to an established, known and well-functioning conveyance system, adequate erosion protection is provided and permits from other agencies are obtained, as needed.

When a project includes the construction of a drainage system, private drainage systems shall connect to the proposed storm drain manholes, catch basins, stub-outs, or tees. The use of sidewalk drains shall not be permitted.

In areas without an existing drainage system, the private drainage system shall discharge in accordance with Section D4-02 (Outfalls and Discharge Locations).

Properties that can drain directly to Lake Washington or Lake Sammamish shall ensure that sufficient capacity to pass the 100-year storm peak flow rate for all drainage in the pipe is provided and that the pipe invert matches the ordinary high water elevation to prevent erosion.

B. Roof, Footing, and Yard Drains

If MR5 (On-site Stormwater Management) applies, roof, footing, and yard drainage shall be managed using on-site practices if site conditions allow, per Chapter D6.

Roof and footing drain pipes shall be separate lines which may only be joined at an elevation at least one (1) foot below the lowest footing drain invert elevation. The minimum cover over the storm drain stub at the property line shall be two (2) feet.

Clean-outs (4-inch minimum diameter) with factory manufactured fittings, shall be provided at all junctions and bends greater than 45 degrees. The maximum spacing between clean-outs shall not exceed 100 feet.

Roof, footing and yard drains shall not be connected to the sanitary sewer system.

Roof, footing and yard drains shall not be located within the public right-of-way except where connecting to the municipal drainage system.

Roof, footing and yard drain systems serving more than one parcel shall be within private utility easements.

Roof, footing, and yard drainage may be conveyed over steep banks in single wall, corrugated polyethylene tubing (CPT) provided:

- the overbank drain is privately owned and maintained;
- the minimum tubing slope is 15% or greater;
- the CPT is continuous and without joints from the top of the slope to the toe;
- the CPT is a minimum of 4 inches and a maximum of 6 inches in diameter;
- a yard drain or clean-out is placed at the top of the slope;
- the overbank drain is buried with a maximum cover of 1 foot;
- the outfall discharge is non-erosive.

CPT may not be used in the right-of-way, or for any other purpose except as a privately owned and maintained overbank drain.

C. Maintenance

Roof, footing, and yard drainage systems, drainage systems on single family properties, drainage facilities within private easements, and drainage facilities otherwise denoted as private, shall be designed to provide access for maintenance and operation by the owners of such facilities.

D4-04.12 Private Commercial and Multi-Family Drainage Systems

A. General

Private commercial and multi-family drainage systems are to be privately inspected and certified. Private commercial and multi-family drainage systems are not required to adhere to City Standards and Specifications, except where stated herein.

For new single family subdivision developments, if a new public road is dedicated with the plat, the detention system that serves both the new public roadway and the subdivision would be owned and operated by the City. A hold harmless agreement needs to be provided to the City by the Developer if access to the detention facility is across a private roadway. If the new subdivision includes only frontage improvements and no new public roadway is created, the drainage facilities serving both the frontage improvements and the subdivision shall be private.

Private single family drainage systems are required to adhere to City Standards and Specifications and will require inspection from a City Inspector.

If MR5 (On-site Stormwater Management) applies, private commercial and multi-family drainage systems shall be managed using on-site practices if site conditions allow, per Chapter D6.

In areas having an existing piped conveyance system, the stormwater outfalls for parking lot, driveway, and roadway drainage shall be made by the following (in order of preference):

(1) Connecting the conveyance pipeline to an existing manhole or catch basin; or

(2) Constructing a new manhole or catch basin on the existing storm drainage pipeline and connecting the conveyance pipeline to this new structure.

In areas having an existing piped conveyance system, the stormwater outfalls for roof, footing, and yard drains may be made by the two methods above or by the following (in order of preference):

(1) Connecting the private drainage pipe to an existing storm drain manhole, catch basin or stub-out if provided within 100 feet and downslope of the property line; or

(2) Coring the abutting conveyance pipeline and installing a saddle tee and providing a clean-out outside of the public right-of-way; or

(3) Coring the abutting profile wall conveyance pipeline (PVC or corrugated polyethylene only; CMP may not be blind tapped) and installing an insert tee and clean-out outside of the public right-of-way; or

(4) Installing a tee fitting in the abutting conveyance pipeline and providing a clean-out outside of the public right-of-way; or

(5) Connecting the private drainage pipe to an existing sidewalk drain; or

(6) Providing a new sidewalk drain if the closest existing drainage system or stub-out is greater than 100 feet and downslope of the property line; or

(7) Outfalling to an open channel or stream, provided that the drainage path continues downstream to an established, known and well-functioning conveyance system, adequate erosion protection is provided and permits from other agencies are obtained, as needed.

When a project includes the construction of a drainage system, private drainage systems shall connect to the proposed storm drain manholes, catch basins, stub-outs, or tees. The use of sidewalk drains shall not be permitted.

In areas without an existing drainage system, the private drainage system shall discharge in accordance with Section D4-02 (Outfalls and Discharge Locations) herein.

Properties that can drain directly to Lake Washington or Lake Sammamish shall ensure that the 100-year storm capacity for all drainage in the pipe is provided and that the pipe invert matches the ordinary high water elevation to prevent erosion.

B. Flow Control and Treatment Facilities

Flow Control and Treatment Facilities shall comply with all criteria for stormwater systems set forth herein unless specifically exempted.

C. Other On-site Drainage Facilities

All drainage facilities which convey offsite stormwater must be built to City standards.

Drainage facilities for commercial and multi-family properties shall comply with all criteria for stormwater systems set forth herein; however, they are exempt from sections D4-04, D4-05, D7-02, D7-03, D8-04, D8-05, and Appendix D-1 Standard Details, except for any portions within these sections that relate to Flow Control and/or Treatment Facilities, and except for any facilities which convey offsite stormwater.

Other on-site private drainage facilities shall be designed by a professional engineer licensed by the State of Washington to meet City Storm & Surface Water Utility Codes and using industry standards and practices.

D. Maintenance

Drainage systems on commercial and multi-family properties, drainage facilities within private easements, and drainage facilities otherwise denoted as private, shall be designed to provide access for maintenance and operation by the owners of such facilities.

D4-05 MANHOLES, CATCHBASINS AND INLETS

D4-05.1 General

Stormwater inlets in a roadway shall be located in the curb line and shall be fitted with bolt locking vaned grates.

A through-curb inlet frame shall be used where conditions limit the effectiveness of a flat grate inlet. Examples of such conditions are where a high likelihood of clogging from leaf fall or other debris exists, in sag vertical curves, intersection curb returns, and when the structure is a surface drainage end point, such as in a cul-de-sac.

Bi-directional vaned grates shall be used in sag vertical curves.

All manhole covers shall be set flush with ground surface, except where otherwise designated by the Utility. Manholes in unpaved areas and easements shall have bolt-locking covers. All manholes in paved areas and sidewalks shall have standard, non-bolt locking covers.

Vertical ladders or steps shall be installed immediately under the cover or grate opening to a walkable surface on all structures exceeding four feet deep to the pipe invert.

All manholes, catchbasins, inlets and or other concrete structures shall be precast. If precast is not an option, cast-in-place structures require submitted and stamped drawings by the Design Engineer to the City.

All manholes, catchbasins, inlets and lids shall be designed for H-20 loading.

D4-05.2 Spacing Requirements

Table 4.10 Pipe Sizes And Lengths Between Structures

Upstream Structure To Downstream Structure	Pipe Diameter (Inches)	Minimum Pipe Slope (%)	Maximum Structure Spacing (ft)
Inlet/MH to Inlet/MH	12	2.0%	150-300 (i, iii
Inlet/MH to CB	8	2.0%	100
Inlet/MH to CB	12	1.0%	150
CB to CB	8	1.0%	150-300 (ii, iii)
CB to CB/MH	12 or greater	0.5%	150-300 (iii)
MH to MH	12 or greater	0.5%	400 (iv)

i. Compensatory catchment must be provided in downstream, on-site catch basin(s).
ii. Driveways, parking lots, and private systems only.
iii. Maximum spacing between grates shall be:
- 150 feet on surface grades less than 1%; and
- 200 feet on surface grades from 1% to 3%; and
- 300 feet on surface grades over 3%; or
- as required by grate flow capacities.

iv. Access points only - no stormwater inputs.
v. A type 2 catch basin is required to be installed for every 800 linear feet of storm drain pipeline.

Table 4.11 Allowable Structures And Pipe Sizes

Structure Type (i)	Maximum Pipe Diameter	
	SOLID WALL PIPE *HDPP, PVC, DI, CMP (v), CPE*	PROFILE WALL PIPE *RCP, CPE*
Concrete Inlet (ii iii)	12”	12”
Type I CB (ii)	15”	12”
Type I L CB (iv)	24”	18”
Type 2 - 48 inch diam.	30”	24”
Type 2 - 54 inch diam.	36"	30”
Type 2 - 60 inch diam.	48”	36”
Type 2 - 72 inch diam.	54”	42”
Type 2 - 84 inch diam.	60”	54”
Type 2 - 96 inch diam.	72”	72”

i. Catch basins, manholes, and inlets including steps, ladders, and handholds shall conform to COB Standard Details.
ii. Maximum four (4) vertical feet allowed between grate/cover and pipe invert elevation.
iii. Limited to one inletting pipe, 6 inches or less in diameter.
iv. Maximum five (5) vertical feet allowed between grate/cover and pipe invert elevation.
v. CMP allowed for detention pipe only.

The number and size of pipes that may be connected to any one structure is limited in order to maintain the integrity of the structure. For angled connections or those with several pipes on the same plane, a larger structure than set forth in the Table 4.11 above may be required. For structural integrity, minimum undisturbed wall (edge of pipe opening to edge of pipe opening) shall be 8-inches. For 72-inch and 96-inch diameter structures, the minimum undisturbed wall

between openings is 12 inches. Detailed plans of structures with multiple pipes or angled connections may be required to ensure proper structure selection.

D4-05.3 Maintenance Access

Where no direct maintenance vehicle access from a maintenance access road can be provided or when greater than 15 feet from a roadway, all structures shall be channelized and shall not have catchment. Provide an oversized catch basin to compensate for lost catchment at the first available access point for maintenance vehicles.

The maximum manhole spacing on conveyance pipelines which do not have any stormwater inlets shall be 400 feet.

Manholes, catch basins or inlets in easements shall be constructed to provide a stable, level grade for a minimum radius of 3.0 feet around the center of the access opening.

D4-06 FLOW CONTROL

D4-06.1 General

Flow control is required when a project triggers MR7 by definition of the project threshold discharge area. Use the criteria set forth in Section 24.06.65 of the Storm and Surface Water Utility Code and design guidelines Volume III, Section 3.2 of the DOE Manual as modified herein to plan, design and construct stormwater detention systems.

Flow control systems shall be designed to maximize reliability, minimize maintenance needs, and maximize the distance between the inlet and outlet in order to improve runoff quality, and minimize hazards to persons or property (both on-site and off-site), nuisance problems and risk of failure.

In areas of high groundwater, the groundwater collection system flows shall bypass the detention system.

Flow control facilities that serve multiple sites or phases of development are subject to all of the engineering and design requirements contained in the Storm and Surface Water Utility Code and these Standards. Conceptual site plans for all sites to be served by the proposed stormwater facilities shall be submitted to the City for review. Construction of the facilities must occur in conjunction with the first project or phase to be served by the flow control facilities.

Flow control is waived for site areas which are or will be set aside in Native Growth Protection Areas and Easements (NGPAs/NGPEs) provided such NGPAs/NGPEs are in separate tracts, or in easements which are permanently fenced or permanently signed when included as part of the lot or the developed parcel. Flow control system design shall assume that all other pervious areas will be landscaped as part of or following development.

The requirement for flow control is met for sites that implement full infiltration or full dispersion per Section D6-03.1. Flow control requirements may be partially offset by implementing on-site stormwater management practices, where site conditions allow. See Chapter D6 to evaluate feasibility on-site practices before designing flow control facilities.

The 100-year water surface elevation shall be at least 1 foot below the lowest habitable finished floor elevation in the area that is tributary to the stormwater detention facility.

The 100-year water surface shall not surcharge roof, footing and yard drains, or underdrains.

Street and parking overlays are considered to be routine maintenance and are not considered to be redevelopment per Section 24.06.065 F of the Storm and Surface Water Utility Code.

Removal of pavement to subgrade and subsequent replacement (not including spot base repairs) is considered to be complete reconstruction which qualifies as redevelopment and disturbance. Such reconstruction is not considered to be routine maintenance.

Flow control facilities for the right-of-way shall be owned and operated by the City and shall be separate from private on-site systems. In a plat where the stormwater facilities will be owned and operated by the City, runoff from the right-of-way and private properties in the plat may be combined and controlled in a single facility. Private detention systems may accommodate public drainage (e.g., from a public right-of-way) if a hold harmless agreement is completed by the developer and recorded against the property, and the proposal meets all the other design requirements of the Utility.

D4-06.2 Design Flow Rates

A. General

Design flow rates are established in Section 24.06.065 (E) of the Storm and Surface Water Utility Code.

Upstream off-site runoff must bypass the proposed flow control facilities unless the existing peak runoff rate from the upstream off-site area for the 100-year peak flow rate is less than 50 percent of the allowable release rate for the 100-year peak flow rate of the proposed project.

If the runoff is above the 50% limit and bypassing detention is not practical, the detention facility shall be sized for the entire flow that is directed to it.

If the upstream offsite property is developed later, the owner of that property is responsible to modify the facility and/or control structure to ensure that flow control requirements are maintained.

B. Sites with Existing Stormwater Detention Systems

When flow control is required on a site with an existing flow control system, the Developer may choose one of the following options:

1. Retain the existing system, modify the control structure and add volume as needed to meet the current codes for flow control; or
2. Replace the existing flow control with a system designed to meet the current codes for flow control; or
3. Retain the existing system to control runoff from existing impervious surfaces and design a second flow control system per the current codes to control runoff from new portions of the development.

When choosing options 1 or 2, the Developer must demonstrate that the combined discharge will meet the performance of the previous standards for the non-project area and the flow control requirements of the current standards for the project area. This requires a flow duration curve

(based on continuous modeling) to be developed at a point immediately downstream from the project that includes the predicted outflow from the existing pond under current conditions, and the historic (forested) runoff from the project site. This combined duration curve would be used to design the new or modified flow control facility and demonstrate compliance for the performance of the existing pond and the new pond (designed to current standards).

When choosing option 3, the Developer must demonstrate that both systems will operate as intended. This option generally requires most of the existing detained development to be hydraulically separated from the proposed development.

D4-06.3 Multi-Purpose Use

Detention facilities designed for multiple use (sport courts, neighborhood parks, play areas, picnic areas, etc.) are allowed.

Storage for runoff from more frequent storms shall be stored separately from the multiple use areas. At a minimum, the detained volume for the 2-year design storm shall be used to size the separate facilities.

Multi-use amenities shall be anchored to prevent floatation. Maintenance of multi-use amenities will be by others and Developer shall make arrangement for such maintenance.

D4-06.4 Control Structures

A. General

Use the criteria and methods set forth in Volume III, Section 3.2.4 of the DOE Manual except as modified herein.

Allowable release rates shall be achieved using a tee type flow restrictor to meter flows.

All restrictor devices to be maintained by the City shall be equipped with a shear gate.

B. Clearances

The minimum clearance between the rim of the overflow standpipe and the bottom side of the structure's top slab shall be no less than 0.5 feet.

The minimum clearance between the flow restrictor (standpipe, orifices, shear gate, etc.) and the steps/ladder rungs shall be two (2) feet.

C. Orifices

Minimum orifice is one (1) inch in diameter without screening.

When screening is provided to prevent blockage, the orifice size may be reduced to a minimum of 0.5-inch.

A notch weir may be incorporated into the tee-type flow restrictor when a floatables baffle is provided. See Figures 3.19, 3.22 and 3.23 of the DOE Manual.

D. Maintenance Access

Covers, grates, and hatches shall be bolt locked.

All stormwater detention system control structures shall be accessible for maintenance and operation.

In single family residential subdivisions, control structures which are not abutting a roadway shall be provided with dedicated tracts at least 15 feet wide to accommodate maintenance vehicles. The minimum clear driving width shall be 12 feet.

In multi-family and commercial developments, control structures which are not abutting a roadway shall be provided with access to accommodate maintenance vehicles. The minimum clear driving width shall be 12 feet.

Maximum access road grades: 15% (paved)

10% (gravel)

Minimum turn-around radius: 25 feet or hammerhead.

Gates and/or removable bollards are required to restrict access, as necessary, to drainage facilities. Such measures shall comply with the Land Use Code and these engineering standards. Cables and chains stretched across access roads are not acceptable.

D4-06.5 Ponds

A. General

Use the criteria and methods set forth in Volume III, Section 3.2.1 of the DOE Manual as modified herein.

Stormwater detention ponds may be used as interim sedimentation facilities if cleaned and restored to approved plan conditions following completion of all on-site construction.

Stormwater shall be routed through a catch basin with spill control prior to discharging to the pond in order to facilitate the easy removal of transported sediments and debris.

B. Design Criteria

Provide debris barriers or trash racks on the detention pond outlet to protect the outlet from blockage or plugging.

C. Embankments

All embankments for detention and treatment facilities shall comply with Dam Safety Guidelines as published by the Dam Safety Division of the Department of Ecology, current edition. The maximum embankment height is measured from the downslope toe to the crest of the embankment.

All embankments for detention facilities six (6) feet and higher shall be designed, inspected and certified by a civil/geotechnical engineer. The civil/geotechnical engineer shall submit a letter certifying that all embankment design requirements have been met during embankment construction.

The maximum height of rockeries subject to inundation due to fluctuating pond levels is four (4) feet. The exposed face of the rockery shall be above the permanent pool elevation. Rockery drains shall drain through the detention system.

Ponds may be designed with retaining walls only as approved by the City on a case-by-case basis and provided that the design conforms to DOE Manual Volume III, Section 3.2.1. Public safety shall be a primary design consideration.

D. Dimensions

For ponds where the maximum design water depth is less than three (3) feet deep, the minimum bottom width is six (6) feet.

For ponds where the maximum design water depth is three (3) feet deep and greater, the minimum bottom width shall be three (3) times the maximum design water depth.

The pond bottom shall be sloped at 0.5% towards the outlet for drainage to help facilitate maintenance.

See D4-07 for detention pond setback requirements.

E. Maintenance Access

Use the criteria set forth in Volume III, Section 3.2.1 of the DOE Manual as modified herein.

A vehicle access ramp shall be provided to the bottom of the detention pond when the bottom width is 15 feet or greater and/or when the height of the interior pond embankment and/or wall is greater than four (4) feet. The grade of the access ramp shall be no steeper than 20%.

Gates and/or removable bollards may be required to restrict access to drainage facilities. Such measures shall comply with the Land Use Code and these engineering standards. Cables and chains stretched across access roads are not acceptable.

F. Safety

Use the criteria set forth in Volume III, Section 3.2.1 of the DOE Manual. Fencing shall be required when vertical walls are used, when more than 25% of the perimeter side slopes are steeper than 3 H: IV, and when the permanent ("dead") pool depth exceeds three (3) feet.

For publicly owned and maintained ponds, fencing shall be cyclone fencing with black vinyl coating at minimum 6 feet tall. Fencing shall conform to the Standard Plans for Chain Link Fence Type 3.

For privately owned and maintained ponds, fencing shall be minimum 42 inches tall with no spaces between boards greater than 4 inch clear space.

G. Overflow & Spillways

Use the criteria set forth in Volume III, Section 3.2.1 of the DOE Manual as modified herein.

All detention storage facilities shall include a provision for non-erosive control of overflows. Overflows shall be directed to a safe discharge path to protect adjacent and downstream properties from damage. Provide calculations and data to support the design.

Surface detention ponds shall be provided with a minimum of two controlled emergency overflows - the primary overflow in the control structure and the secondary overflow in the engineered embankment.

The crest of the secondary overflow shall be at least 0.5 feet above the crest of the primary overflow.

H. Vegetation & Landscaping

Detention pond landscaping shall comply with the requirements of Type III landscaping set forth in Section 20.20.520 of the Land Use Code and as specified herein. Ponds with walls higher than six (6) feet shall be landscaped to Type II requirements set forth in Land Use Code Section 20.20.520 and as specified herein. Deciduous trees shall not be utilized in and around detention ponds. However, deciduous shrubs and shrub/trees (e.g. Vine Maple) may be used in the understory to provide needed diversity for a pleasing appearance.

All ponds shall be landscaped to provide for slope stability, erosion control, and low maintenance. Landscape materials shall be fully compatible with use as a stormwater detention facility including runoff treatment.

Floatable or erodible material (i.e. wood chips, beauty bark, straw mulch, etc.) shall not be allowed in the pond interiors.

Vegetation on pond embankments shall be limited to shallow rooted varieties.

Vegetation shall be placed into topsoil above or adjacent to the engineered embankment.

Where detention pond landscaping shall be maintained by the Utilities Department, landscaping shall be non-irrigated, low maintenance, and drought tolerant and shall consist of native plant species. Lawn or turf grass is not allowed.

Use the criteria set forth in Volume III, Section 3.2.1 of the DOE Manual to assist in appropriate vegetation selection.

D4-06.6 Underground Detention Systems

A. General

Use the criteria and methods set forth in Volume III, Section 3.2.2 and 3.2.3 of the DOE Manual as modified herein.

All stormwater shall be routed through a catch basin with spill control prior to discharging to detention vaults or pipes to facilitate the easy removal of transported sediments and debris.

B. Design Criteria

For Detention Vault/Tank Setbacks, see D4-07.

Detention vaults/tanks shall not be located underneath any structure (e.g. buildings, sheds, decks, carports, retaining walls, etc.); except that under building detention is allowed in the Central Business District, in areas of zero lot line, or upon approval by the City.

Detention vaults/tanks shall not be located where such facilities interfere with other underground utilities.

If vaults are constructed above ground, they shall be provided with visual screening and landscaping.

When the design of vaults does not take into account buoyancy or hydrostatic pressure, footing drains shall be provided. Footing drains shall be backfilled to within two (2) feet of the top of the vault with Gravel Backfill for Drains conforming to Section 9-03.12(4) of the Standard Specifications. The gravel backfill shall be protected from contamination by soil fines.

When the design of tanks or pipes does not take into account buoyancy, underdrains shall be provided. Underdrains within the pipe trench shall be backfilled from the bottom of the pipe to the crown with washed rock. The washed rock shall be protected from contamination by soil fines.

Clean-outs on footing drains and underdrains shall be provided every 100 feet and at bends or drain pipe junctions. Connection to the stormwater conveyance system shall be at a point where the hydraulic grade line in the conveyance pipe does not affect the free draining ability of the footing drains or underdrains.

C. Minimum Size

The minimum diameter of a detention pipe shall be 36-inches.

The minimum height of any detention vault shall be 84-inches.

D. Structural Design

Use the criteria set forth in Volume III, Section 3.2.2 and 3.2.3 of the DOE Manual and by the City Building Code. Note that where the top of a vault is in a traveled way, additional loading requirements to accommodate fire trucks will apply. Please consult the Building Division of the Development Services Department for available information on *Structural Slab Design Loadings.*

Hydrostatic Pressure & Buoyancy

Use the criteria set forth in Volume III, Section 3.2.2 and 3.2.3. of the DOE Manual as modified herein. If permanently lowering the groundwater in the vicinity is not feasible, pipes and vaults shall be designed to accommodate hydrostatic loading and buoyancy effects.

E. Maintenance Access

Use the criteria set forth in Volume III, Section 3.2.2 and 3.2.3. of the DOE Manual as modified herein. Since underground detention facilities are subject to confined space entry regulations, such facilities shall be designed to facilitate safe inspection and maintenance.

Access structures at each end of the facility shall be required. Spacing between access openings shall not exceed 50'. Covers, grates, and hatches shall be bolt locking. If the vault or pipe contains cells, one access minimum per cell is required.

Access openings shall be 24" in diameter per Standard Detail D-22 and centered over a ladder and/or steps. For control structures, accesses must be located so that an 8" rigid vactor tube can reach the sump directly from the top, and so that a person entering the structure can step off the ladder or steps onto the floor.

The opening shall allow visual inspection of the restrictor pipe, while maintaining vertical vactor access to the sump area.

In order to achieve both requirements, it may be necessary to increase the control structure size, provide two 24" access openings or a hatched cover that conforms to the loading requirements given the proposed location.

Orifice elbows shall be located on the side of the stand pipe nearest the ladder for clear visual inspection from above.

Gates and/or removable bollards may be required to restrict access to drainage facilities. Such measures shall comply with the Land Use Code and these engineering standards. Cables and/or chains stretched across access roads are not acceptable.

D4-06.7 Infiltration Systems

A. General

Infiltration Systems for Flow Control

Infiltration systems for projects triggering MR7 shall be designed in accordance with criteria set forth in Volume III, Chapter 3.3 with exceptions and additions noted below.

A detention system may be required in conjunction with the infiltration system to meter flows at an infiltratable rate.

Infiltration areas shall not be: 1) driven on or across by any vehicles or equipment, 2) used for material storage or stockpiles, or 3) used for vehicle or equipment parking.

Infiltration areas shall be secured with temporary fencing prior to clearing the site.

Approval of an infiltration system shall obligate the owner to repair, replace, or reconstruct the infiltration system if it fails to operate as designed. The maintenance and operation schedule for an infiltration system shall include such a provision.

Roof Downspout Infiltration Systems

Roof downspout infiltration systems shall be designed according to criteria set forth in Volume III, Chapter 3.1.1 of the DOE Manual with exception and additions noted in Chapter 6 of these Standards, “On-Site Stormwater Management”.

Areas proposed for infiltration shall be secured with temporary fencing prior to clearing the site. Existing, developed lots shall locate downspout infiltration systems in areas which have not previously been: 1) driven on or across by vehicles or equipment, 2) used for material storage or stockpiles, or 3) used for vehicle or equipment parking.

Approval of a downspout infiltration system shall obligate the owner to repair, replace, or reconstruct the infiltration system if it fails to operate as intended.

All the general requirements of D4-06.7 (A) shall apply, except that infiltration trenches may be located under new pavement.

B. Design Criteria

Infiltration Systems for Flow Control

Infiltration systems for projects triggering MR7 shall be designed in accordance with criteria set forth in Volume III, Chapter 3.3 of the DOE Manual as modified herein.

The Developer shall demonstrate through:

- Infiltration testing;
- Soil logs; and

- A written opinion of a licensed civil/geotechnical engineer, that sufficient permeable soils exist on the site for an infiltration system meeting the requirements herein and site-specific conditions to function properly.

Infiltration facilities shall not be located within required setback distances specified in D4-07.

Infiltration systems for flow control shall be designed to infiltrate such that any overflow/bypass meets the flow duration standard.

Roof Downspout Infiltration Systems

Design criteria for Roof downspout infiltration systems are contained in Chapter D6. Setbacks for Roof Downspout Infiltration Systems are listed in Section D4-07.

C. Geotechnical Report Requirements for MR6 and MR7, Flow Control and Treatment

These geotechnical report requirements are in addition to those in the "Geotechnical Report & Stability Analysis Requirements," required per Chapter D2.

An adequate number of test holes shall be located over the proposed site to substantiate representative conditions for the final layout of the development. As a minimum condition, one test hole shall be located in each infiltration area for each 5,000 square feet of tributary area runoff to be infiltrated. Test hole locations shall be clearly identified in the geotechnical report and labeled on the drainage plan.

Soil logs must be submitted to describe soil type and depth, and a site map shall be submitted showing the location of each test hole.

Test pits or borings shall extend at least three (3) feet below the bottom of roof downspout systems and five (5) feet below the bottom of all other infiltration facilities. Soil logs shall include the depth to the seasonally high ground water table and impervious strata. The wet season water table elevation measurements shall be made with a piezometer during the period when the water table elevation is expected to be at its maximum (November 15 through April 15).

The geotechnical report shall address the potential impact of the infiltration system on downslope areas both on-site and off-site such as slope stability, foundation capacity, and other geotechnical information needed to design and assess constructability of the facility and the proximity from building foundations. Determine whether there would be any adverse effects caused by seepage zones on nearby building foundations, basements, roads, parking lots or sloping sites.

An inspection of the soil by a civil/geotechnical engineer shall be made after the system is excavated, before the gravel backfill is placed, to confirm that suitable soils are present. The geotechnical report shall be amended to reflect this inspection and confirmation of suitable soils.

D. Infiltration Test Requirement

The design infiltration rate for flow control or treatment infiltration facilities shall be determined using one of the two methods outlined in Section D4-06.7H entitled Determining Subgrade infiltration rates in: 1) PIT tests, 2) Soil Grain Size Analysis Method.

The design infiltration rate for on-site stormwater management infiltration BMPs for projects where MR5 applies but MR6 and MR7 do not, may be determined with the Simplified Infiltration Test included below, or by one of the two methods outlined in Section D4-06.7H entitled Determining Subgrade Infiltration Rates: 1) PIT tests, 2) Soil Grain Size Analysis Method.Simplified Infiltration Test

Soil Examination

- Locate potential site for on-site stormwater management facility (such as rain garden, pervious pavement, or infiltration system) and dig a hole at least 1 foot below the subgrade of the proposed BMP, in the location of the proposed BMP,and 1-2 feet in diameter.
- If the hole fills with water, the groundwater level is too close to the ground surface and the site is not appropriate for infiltration BMPs.
- Examine soil on the sides of the hole and test for soil texture:

Make sure soil is moist. If the soil is dry, add water a few drops at a time, and break down any chunks to work the water into the soil. Take a handful and attempt to squeeze it into a ball. If small orange specks of dirt (known as “mottles”) are present in the soil, note the distance from the ground surface where they are first encountered – this can be considered the depth of the seasonal high groundwater. If mottles are present, check groundwater depth design requirements before proceeding with the infiltration test.

Infiltration Test

- Secure a board or ruler in the hole with markings every inch, increasing in number from the bottom to the top of the hole.
- Fill the hole with 10 inches of water.
- Time how long it takes the water to drain completely out of the hole.

Do the test three times consecutively with each test immediately following each other, and use the results of the third test in your infiltration rate calculation.

Site Suitability or Infiltration Rate

- Divide the number of inches of standing water initially added to the hole by the number of hours it takes for the water to drain out completely. The resulting number is the measured (short term) infiltration rate in inches per hour.
- Select a correction factor based on site conditions between 5.5 and 18 from the DOE Manual, Volume III, Table 3.9. If the site conditions are unknown or uncertain, use a higher correction factor. Correction factors are not needed for bioretention facilities, infiltration trenches, or infiltration drywells.
- Divide the measured infiltration rate by the correction factor. The resulting number is the long term infiltration rate (design infiltration rate) in inches per hour.
- If the measured infiltration rate is greater than 10 inches per hour (drains in less than one hour), use a maximum design infiltration rate of 10 inches per hour.
- If the measured infiltration rate is less than 0.25 inches per hour (takes more than 40 hours to drain a 10-inch deep column of water), the site is not suitable for a rain garden or

bioretention cell. If the long term infiltration rate is less than 0.25 inches per hour, the site is not suitable for pervious pavement.

- For bioretention facilities, the design infiltration rate used to size the facility will be whichever is lower: the measured infiltration rate of the native soil beneath the facility site, or infiltration rate of the bioretention soil mix layer. For infiltration trenches and drywells, use the measured infiltration rate. To design other infiltration facilities, use the long-term infiltration rate of the underlying native soil.

Example

The simplified infiltration test is being performed by a home owner installing a pervious pavement patio on their property. The home owner is performing this test during the wet season for most accurate results. They dig a hole that is 2 feet deep and 2 feet in diameter. They first observe the soils and determine that the soils are sand mixed with silt and likely moderately draining. Next they note that no groundwater was encountered. After this, they fill the hole with 10 inches of water and observe that it takes 4 hours to drain all the water completely from the hole. They then calculate the measured, short term infiltration rate as:

Short Term Infiltration Rate = 10 inches/4 hours = 2.5 inches per hour

They then use the site conditions and Table 3.9 in the DOE Manual to determine the infiltration rate correction factor in order to determine the long term infiltration rate. They did two infiltration tests in a small area, so variability correction factor will be 3. They plan on maintaining the pervious pavement regularly, but they may sell the property within 5 years, so a maintenance correction factor of 5 is selected. Since the water flowing into the pervious pavement is from a screened pipe that drains the roof, the influent correction factor is set at 2. The partial correction factors are added together to get the Total Correction Factor (CF):

$$CF = 3 + 5 + 2 = 10$$

Then, the correction factor is applied to the short term infiltration rate by dividing to get the long term infiltration rate (I):

I = 2.5 inches per hour / 10 = 0.25 inches per hour

This infiltration rate (0.25 inches per hour) is considered the “Design Infiltration Rate,” and is used to size the pervious pavement patio.

E. Overflows

Each flow control infiltration facility shall provide emergency surface storage at least 10% of the 100-year, 24-hour design storm volume, with a minimum depth of 0.5, on the site prior to discharging runoff to a safe overflow route. The overflow route shall have the capacity for the 100-year, 24-hour flow in the event of system failure. The surface storage is intended to make the owner aware of a problem with the infiltration system. Overflows shall be routed to the municipal storm drainage system if surface dispersion cannot be provided, or in accordance with Section D4-02 if routing to the municipal storm drainage system is not feasible. The overflow route must be contained on the owner’s property, and shall be shown on the plan.

F. Runoff Treatment

Inflow to flow control and runoff treatment infiltration facilities shall be pre-treated for debris and sediment removal. Where runoff is anticipated to also contain contaminants and pollutants, it shall be treated using the appropriate BMPs set forth in the Chapter D5, Water Quality BMPs prior to being infiltrated.

G. Maintenance Access

Infiltration system components shall be accessible for periodic inspection and routine maintenance.

Infiltration systems, with pre-treatment facilities, which are not abutting a roadway shall be provided with access to accommodate maintenance vehicles and construction equipment. The minimum clear driving width shall be 12 feet.

For roof downspout infiltration systems, access allowances for maintenance and construction equipment shall be made to facilitate routine maintenance activities and reconstruction (if necessary in the future).

H. Determining subgrade infiltration rates

Determining infiltration rates of the site soils is necessary to determine feasibility of designs that intend to infiltrate stormwater on-site. It is also necessary to estimate flow reduction benefits of such designs when using the Western Washington Hydrologic Model (WWHM) or MGS Flood.

The following provides recommended tests for the soils underlying bioretention areas. The test should be run at the anticipated elevation of the top of the native soil beneath the bioretention facility.

Method 1:

- Small bioretention cells (bioretention facilities receiving water from 1 or 2 individual lots or < 1/4 acre of pavement or other impervious surface): Small-Scale Pilot Infiltration Test (PIT). See Section D4-06.7J for small-scale PIT method description. See the DOE Manual Volume III Table 3.9 to select an appropriate infiltration correction factor.
- Large bioretention cells (bioretention facilities receiving water from several lots or 1/4 acre or more of pavement or other impervious surface): Multiple small or one large-scale PIT See Section D4—6.7I. If using the small-scale test, measurements should be taken at several locations within the area of interest. After completing the infiltration test, excavate the test site at least 3 feet if variable soil conditions or seasonal high water tables are suspected. Observe whether water is infiltrating vertically or only spreading horizontally because of ground water or a restrictive soil layer. See DOE Manual Volume III Table 3.9 for a selection of an appropriate infiltration correction factor.

- Bioretention swales: approximately 1 small--scale PIT per 200 feet of swale, and within each length of road with significant differences in subsurface characteristics. However, if the site subsurface characterization, including soil borings across the development site, indicate consistent soil characteristics and depths to seasonal high ground water conditions, the number of test locations may be reduced to a frequency recommended by a geotechnical professional. See DOE Manual Volume III Table 3.9 for a selection of an appropriate infiltration correction factor.

Method 2: Soil Grain Size Analysis Method:

This method is restricted to sites underlain with soils not consolidated by glacial advance (e.g., recessional outwash soils).

- Small bioretention cells: Use the grain size analysis method described in Section D4-06.7K based on the layer(s) identified in results of one soil test pit or boring.
- Large bioretention cells: Use the grain size analysis method based on more than one soil test pit or boring. The more test pits/borings used, and the more evidence of consistency in the soils, the less of a correction factor may be used.

Bioretention swales: Approximately 1 soil test pit/boring per 200 feet of swale and within each length of road with significant differences in subsurface characteristics. However, if the site subsurface characterization, including soil borings across the development site, indicate consistent soil characteristics and depths to seasonal high ground water conditions, the number of test locations may be reduced to the minimum frequency indicated above.

I. Large Scale Pilot Infiltration Test (PIT)

Large-scale in-situ infiltration measurements, using the Pilot Infiltration Test (PIT) described below is the preferred method for estimating the measured (initial) saturated hydraulic conductivity $_{(Ksat)}$ of the soil profile beneath the proposed infiltration facility. The PIT reduces some of the scale errors associated with relatively small-scale double ring infiltrometer or "stove-pipe" infiltration tests. It is not a standard test but rather a practical field procedure recommended by Ecology's Technical Advisory Committee.

Infiltration Test

- Excavate the test pit to the estimated surface elevation of the proposed infiltration facility. Lay back the slopes sufficiently to avoid caving and erosion during the test. Alternatively, consider shoring the sides of the test pit.
- The horizontal surface area of the bottom of the test pit should be approximately 100 square feet. Accurately document the size and geometry of the test pit.
- Install a vertical measuring rod (minimum 5-ft. long) marked in half-inch increments in the center of the pit bottom.
- Use a rigid 6-inch diameter pipe with a splash plate on the bottom to convey water to the pit and reduce side-wall erosion or excessive disturbance of the pond bottom. Excessive erosion and bottom disturbance will result in clogging of the infiltration receptor and yield lower than actual infiltration rates.
- Add water to the pit at a rate that will maintain a water level between 6 and 12 inches above the bottom of the pit. A rotameter can be used to measure the flow rate into the pit.

Note: The depth should not exceed the proposed maximum depth of water expected in the completed facility. For infiltration facilities serving large drainage areas, designs with multiple feet of standing water can have infiltration tests with greater than 1 foot of standing water

Every 15-30 min, record the cumulative volume and instantaneous flow rate in gallons per minute necessary to maintain the water level at the same point on the measuring rod.

Keep adding water to the pit until one hour after the flow rate into the pit has stabilized (constant flow rate; a goal of 5% variation or less variation in the total flow) while maintaining the same pond water level. The total of the pre-soak time plus one hour after the flow rate has stabilized should be no less than 6 hours.

- After the flow rate has stabilized for at least one hour, turn off the water and record the rate of infiltration (the drop rate of the standing water) in inches per hour from the measuring rod data, until the pit is empty. Consider running this falling head phase of the test several times to estimate the dependency of infiltration rate with head.
- At the conclusion of testing, over-excavate the pit to see if the test water is mounded on shallow restrictive layers or if it has continued to flow deep into the subsurface. The depth of excavation varies depending on soil type and depth to hydraulic restricting layer, and is determined by the engineer or certified soils professional. Mounding is an indication that a mounding analysis is necessary.

Data Analysis

Calculate and record the saturated hydraulic conductivity rate in inches per hour in 30 minutes or one-hour increments until one hour after the flow has stabilized.

Note: Use statistical/trend analysis to obtain the hourly flow rate when the flow stabilizes. This would be the lowest hourly flow rate.

Apply appropriate correction factors to determine the site-specific design infiltration rate. See DOE Manual Volume III Table 3.9 for a selection of an appropriate infiltration correction factor.

Example

The area of the bottom of the test pit is 8.5-ft. by 11.5-ft.

Water flow rate was measured and recorded at intervals ranging from 15 to 30 minutes throughout the test. Between 400 minutes and 1,000 minutes the flow rate stabilized between 10 and 12.5 gallons per minute or 600 to 750 gallons per hour, or an average of (9.8 + 12.3) / 2 = 11.1 inches per hour.

J. Small-Scale Pilot Infiltration Test

A smaller-scale PIT can be substituted for the large-scale PIT in any of the following instances.

- The drainage area to the infiltration site is less than 1 acre.
- The testing is for the LID BMP's of bioretention or permeable pavement that either serve small drainage areas and /or are widely dispersed throughout a project site.
- The site has a high infiltration rate, making a full-scale PIT difficult, and the site geotechnical investigation suggests uniform subsurface characteristics.

Infiltration Test

- Excavate the test pit to the estimated surface elevation of the proposed infiltration facility. In the case of bioretention, excavate to the estimated elevation at which the imported soil mix will lie on top of the underlying native soil. For permeable pavements, excavate to the

elevation at which the imported subgrade materials, or the pavement itself, will contact the underlying native soil. If the native soils (road subgrade) will have to meet a minimum subgrade compaction requirement, compact the native soil to that requirement prior to testing. Note that the permeable pavement design guidance recommends compaction not exceed 90% - 92%. Finally, lay back the slopes sufficiently to avoid caving and erosion during the test. Alternatively, consider shoring the sides of the test pit.

- The horizontal surface area of the bottom of the test pit should be 12 to 32 square feet. It may be circular or rectangular, but accurately document the size and geometry of the test pit.
- Install a vertical measuring rod adequate to measure the ponded water depth and that is marked in half-inch increments in the center of the pit bottom.
- Use a rigid pipe with a splash plate on the bottom to convey water to the pit and reduce side-wall erosion or excessive disturbance of the pond bottom. Excessive erosion and bottom disturbance will result in clogging of the infiltration receptor and yield lower than actual infiltration rates. Use a 3 inch diameter pipe for pits on the smaller end of the recommended surface area, and a 4 inch pipe for pits on the larger end of the recommended surface area.
- Pre-soak period: Add water to the pit so that there is standing water for at least 6 hours. Maintain the pre-soak water level at least 12 inches above the bottom of the pit.
- At the end of the pre-soak period, add water to the pit at a rate that will maintain a 6-12 inch water level above the bottom of the pit over a full hour. The depth should not exceed the proposed maximum depth of water expected in the completed facility.
- Every 15 minutes, record the cumulative volume and instantaneous flow rate in gallons per minute necessary to maintain the water level at the same point (between 6 inches and 1 foot) on the measuring rod.

The specific depth should be the same as the maximum designed ponding depth (usually 6 – 12 inches).

- After one hour, turn off the water and record the rate of infiltration (the drop rate of the standing water) in inches per hour from the measuring rod data, until the pit is empty.
- A self-logging pressure sensor may also be used to determine water depth and drain-down.
- At the conclusion of testing, over-excavate the pit to see if the test water is mounded on shallow restrictive layers or if it has continued to flow deep into the subsurface. The depth of excavation varies depending on soil type and depth to hydraulic restricting layer, and is determined by the engineer or certified soils professional. The soils professional should judge whether a mounding analysis is necessary.

Data Analysis

See the explanation under the guidance for large-scale pilot infiltration tests.

K.Soil Grain Size Analysis Method

For each defined layer below the infiltration pond to a depth below the pond bottom of 2.5 times the maximum depth of water in the pond, but not less than 10 feet, estimate the initial saturated hydraulic conductivity (K_{sat}) in cm/sec using the following relationship (see Massmann 2003, and Massmann et al., 2003). For large infiltration facilities serving drainage areas of 10 acres or more, soil grain size analyses should be performed on layers up to 50 feet deep (or no more than 10 feet below the water table).

$$\log_{10}(K_{sat}) = -1.57+1.90D_{10} +0.015D_{60} - 0.013D_{90} -2.08f_{fines} \qquad (1)$$

Where, D_{10}, D_{60} and D_{90} are the grain sizes in mm for which 10 percent, 60 percent and 90 percent of the sample is more fine and f_{fines} is the fraction of the soil (by weight) that passes the number-200 sieve (K_{sat} is in cm/s).

For bioretention facilities, analyze each defined layer below the top of the final bioretention area subgrade to a depth of at least 3 times the maximum ponding depth, but not less than 3 feet (1 meter). For permeable pavement, analyze for each defined layer below the top of the final subgrade to a depth of at least 3 times the maximum ponding depth within the base course, but not less than 3 feet (1 meter).

If the licensed professional conducting the investigation determines that deeper layers will influence the rate of infiltration for the facility, soil layers at greater depths must be considered when assessing the site's hydraulic conductivity characteristics. Massmann (2003) indicates that where the water table is deep, soil or rock strata up to 100 feet below a infiltration facility can influence the rate of infiltration. Note that only the layers near and above the water table or low permeability zone (e.g., a clay, dense glacial till, or rock layer) need to be considered, as the layers below the ground water table or low permeability zone do not significantly influence the rate of infiltration. Also note that this equation for estimating K_{sat} assumes minimal compaction consistent with the use of tracked (i.e., low to moderate ground pressure) excavation equipment.

If the soil layer being characterized has been exposed to heavy compaction (e.g., due to heavy equipment with narrow tracks, narrow tires, or large lugged, high pressure tires) the hydraulic conductivity for the layer could be approximately an order of magnitude less than what would be estimated based on grain size characteristics alone (Pitt, 2003). In such cases, compaction effects must be taken into account when estimating hydraulic conductivity.

For clean, uniformly graded sands and gravels, the reduction in K_{sat} due to compaction will be much less than an order of magnitude. For well-graded sands and gravels with moderate to high silt content, the reduction in K_{sat} will be close to an order of magnitude. For soils that contain clay, the reduction in K_{sat} could be greater than an order of magnitude.

If greater certainty is desired, the in-situ saturated conductivity of a specific layer can be obtained through the use of a pilot infiltration test (PIT). Note that these field tests generally provide a K_{sat} combined with a hydraulic gradient. In some of these tests, the hydraulic gradient may be close to 1.0; therefore, in effect, the test infiltration rate result

is the same as the hydraulic conductivity. In other cases, the hydraulic gradient may be close to the gradient that is likely to occur in the full-scale infiltration facility. The hydraulic gradient will need to be evaluated on a case-by-case basis when interpreting the results of field tests. It is important to recognize that the gradient in the test may not be the same as the gradient likely to occur in the full-scale infiltration facility in the long-term (i.e., when ground water mounding is fully developed).

Once the K_{sat} for each layer has been identified, determine the effective average K_{sat} below the pond. K_{sat} estimates from different layers can be combined using the harmonic mean:

$$K_{equiv} = \frac{d}{\sum \frac{d_i}{K_i}} \qquad (2)$$

Where, d is the total depth of the soil column, d_i is the thickness of layer "i" in the soil column, and K_i is the saturated hydraulic conductivity of layer "i" in the soil column. The depth of the soil column, d, typically would include all layers between the pond bottom and the water table. However, for sites with very deep water tables (>100 feet) where ground water mounding to the base of the pond is not likely to occur, it is recommended that the total depth of the soil column in Equation 2 be limited to approximately 20 times the depth of pond, but not more than 50 feet. This is to ensure that the most important and relevant layers are included in the hydraulic conductivity calculations. Deep layers that are not likely to affect the infiltration rate near the pond bottom should not be included in Equation 2.

Equation 2 may over-estimate the effective K_{sat} value at sites with low conductivity layers immediately beneath the infiltration pond. For sites where the lowest conductivity layer is within five feet of the base of the pond, it is suggested that this lowest K_{sat} value be used as the equivalent hydraulic conductivity rather than the value from Equation 2. Using the layer with the lowest K_{sat} is advised for designing bioretention facilities or permeable pavements. The harmonic mean given by Equation 2 is the appropriate effective hydraulic conductivity for flow that is perpendicular to stratigraphic layers, and will produce conservative results when flow has a significant horizontal component such as could occur due to ground water mounding.

D4-06.8 Dispersion Systems

BMPs for dispersion systems such as those for meeting flow control requirements, including Roof Downspout, Dispersion and Full Dispersion, are discussed in Chapter D6-03.

D4-06.9 Non-Gravity Systems (Pumps)

Pump systems (includes the pumps, force mains, electrical and power supply equipment, structures and appurtenances) are not an approved method of conveying, storing, or treating storm water. A deviation must be approved in order to pump storm water. If the deviation for a pump system is approved, the system shall meet the following minimum requirements:

A. The pump system shall not be used to circumvent any code, engineering standard, or permit condition. The construction and operation of the pump system shall not violate any other City requirements.

B. The Developer shall demonstrate that the pump system is the only feasible alternative available to provide drainage.

C. Pump systems shall be owned, operated, maintained, repaired, and replaced (as needed) by property owner(s) served by such system.

D. Pumped flows shall not exceed the allowable discharge rates set forth herein

E. Each pump shall be capable of discharging the design flow rate for the 100-year, 24-hour design storm.

F. If a stormwater detention system is not required the pump system shall have a storage facility (pond, tank, or vault) sized to hold 25 percent of the total volume of runoff for the developed tributary drainage area for the 2-year storm.

G. The pump system has dual, alternating pumps with emergency on-site, automatic back-up power supply and an external alarm system for system failure and high water level indicator.

H. A safe emergency overflow route shall be provided, if possible.

I. The pump system shall discharge to an elevation higher than the downstream design water surface elevation to prevent backwater/backflow conditions.

J. Maintenance and Operation Schedule shall be prepared and submitted for review prior to permit issuance.

K. A note on the approved plan shall stipulate that the private property owner(s) shall be responsible for any and all claims for injuries and damage due to the operation or failure of the pump system.

D4-06.10 Non-Gravity Systems (Pumps) for Properties where 100% Lot Coverage is Allowed by the City's Land Use Code

The pump system shall not be used to circumvent any code, engineering standard, or permit condition. The construction and operation of the pump system shall not violate any other City requirements.

Pump systems shall be owned operated, maintained, repaired, and replaced (as needed) by property owner(s) served by such system.

Storm detention facilities with flow restrictors shall be installed upstream and discharge by gravity to the pump system.

The pump system shall have a minimum of two pumps with emergency on-site, back-up power supply and an external alarm system for system failure and high water level indicator. The pump chamber shall be sized no greater than a 5-minute on/off cycle time for one pump, however, the pump chamber shall not be larger than 1000 gallons. The total pump capacity shall not exceed the design flow rate for the 1-year, 24 hour storm. All installation work for the pump, electrical connections, and piping will require applicable building, electrical and plumbing permits.

The pump system force main shall connect into the top of a private storm drain pipe or connect to a private catch basin and gravity flow to the public stormwater system. Direct pressure discharge to a gutter, ditch, or stream shall not be allowed.

No public drainage shall be conveyed to the private pumped system.

A maintenance and Operation Schedule shall be prepared and submitted for review prior to UE acceptance and building occupancy.

A note on the approved plan shall stipulate that the private property owner(s) shall be responsible for any and all claims for injuries and damage due to the operation or non-operation of the pump system.

D4-07 SETBACK REQUIREMENTS

D4-07.1 Setback Requirements for Surface Water BMPs

Standard clearances from other Utility pipes apply to all facilities, per D4-04.3.

Setbacks may be modified if the Developer adequately demonstrates that the potential for flooding or erosion impacts are minimal, if approved by the Utilities Reviewer.

Table 4.12 Setback Requirements for Storm Drainage Features

Storm Drainage Feature	Setback Requirement

Flow Control, Treatment and Onsite Facilities including Infiltration Systems (unlined)
• Wetponds
• Detention ponds
• Bioretention (rain garden, bioretention swale, bioretention infiltration planter)
• Roof Downspout Infiltration (infiltration trench or drywell)
• Infiltration Pond
• Biofiltration, filter or other treatment system
	• Measure setback elevations and distances from edge of bottom area of facility.
	• From any structure or building (from finish grade as measured from side of building):
	  o With basement or crawl space: 10 feet
	  o Foundation slab on grade: 5 feet
	  o Uphill from building and *5,000 square feet or more* of contributing impervious area: 100 feet
	  o Uphill from building and *less than 5,000 square feet* of impervious contributing area: 20 feet
	• Septic drainfield (King County Public Health compliance required): 30 feet if downhill, 100 feet if uphill
	• Drinking water well or spring: 100 feet (King County Public Health compliance also required)
	• Steep Slope, Landslide Hazard Area, or other Critical Area: per Land Use Code
	• Top of any slope greater than or equal to 15%: 50 feet (may be revised with evaluation by geotechnical engineer or qualified geologist and approval) or in accordance with applicable Critical Areas Ordinance requirements, whichever is greater
	• Property line: 10 feet (may be reduced for right-of-way with City approval or with agreement from adjacent owner)
	• Within the right-of-way where dense underground infrastructure exists, only accept runoff from sidewalk areas
	• Contaminated soil or groundwater: 100 feet; infiltration within 500 feet requires approval by a licensed hydrogeologist.[1]

Bioretention – Flow-through Planter	Structure setbacks apply per LUC 20.20.010 if Flow-through Planter meets definition of "Structure" in LUC 20.50.046 and/or Building Code. If the Planter is part of the building, there is no building setback.
Pervious pavement with run-on from pervious or impervious area	If accepting run-on from another impervious area: • Building setbacks (from finish grade as measured from side of building): o basement or crawl space: 10 feet

Storm Drainage Feature	Setback Requirement
	○ slab on grade: 5 feet ○ uphill from building: 20 feet ○ driveways: no setback required from garage if floor is slab on grade • 50 feet from septic tank or drainfield (King County Public Health compliance also required) • 100 feet from drinking water well or spring (King County Public Health compliance also required) • 50 feet from top of a slope >15% (may be revised with evaluation by geotechnical engineer or qualified geologist and city approval) or in accordance with applicable Critical Areas Ordinance requirements, whichever is greater • 10 feet from property line (may be waived if on ROW with city approval or with agreement from adjacent owner) • 100 feet from contaminated soil or groundwater; within 500 feet requires approval by a licensed hydrogeologist.[1]
Pervious Pavement without run-on	Comply with Critical Areas rules and associated buffer requirements.
Amended Soil	No setback requirements
Rain Recycling • Rain Barrel • Cistern	If facility meets definition of "Structure" in LUC 20.50.046, apply setbacks per LUC 20.20.010. Generally, a cistern would be considered a structure, a rain barrel would not.
Dispersion BMPs • Concentrated Flow Dispersion • Sheet Flow Dispersion • Splash Blocks • See below for Dispersion Trench	• 50 feet from septic tank or drainfield, unless discharge location is downhill of drainfield (King County Public Health compliance also required) • Flow path requirements in the design guidelines apply
Dispersion Trench	• Downhill property line from end of trench: 20 feet • Even or upslope property line from edge of trench: 5 feet or as agreed by adjacent property owner • Top of 15% or greater slope: 50 feet (may be revised with evaluation by geotechnical engineer or qualified geologist) or in accordance with applicable Critical Areas Ordinance requirements, whichever is greater • Septic drainfield: 100 feet; 30 feet if discharge location is downhill of drainfield (King County Public Health compliance also required) • Drinking water well or spring: 100 feet (King County Public Health compliance also required)
Perforated Stub-Out Connection	• Property line: 5 feet • Structure (from finish grade as measured from side of building): 5 feet
Piped Conveyance Systems	• Do not locate underneath any structure (e.g., buildings, sheds, decks, rockeries or retaining walls which run parallel to the pipeline, carports, etc.), except in the Central Business District, zero lot-line areas, or upon approval by the City. • 10 feet or outside the 1:1 plane from the bottom edge of the pipe or structure to the finished grade at a building or structure, whichever is greater • 10 feet or outside the 1: 1 plane from the bottom edge of the pipe or structure to the property line at finished grade when an

Storm Drainage Feature	Setback Requirement
	easement is not provided on the adjacent property, whichever is greater • One half of the minimum easement width from a structure
Open Channels	• 10 feet from any structure foundation measured horizontally from the edge of the swale at the freeboard elevation
Detention Ponds	• Outside the 1:1 plane from the pond bottom to the finished grade at an adjacent building • Outside the 1: 1 plane from the bottom edge of the pipe or structure to the property line at finished grade when an easement is not provided on the adjacent property • Top of a cut embankment and the toe of a fill embankment to property lines: at least 5 feet
Detention Vault or Tank Wetvault or tank	• Do not locate underneath any structure (e.g., buildings, sheds, decks, carports, retaining walls, etc.) • Finished grade at an adjacent structure foundation to the bottom edge of the vault or the bottom of the excavation at the outside diameter for tanks: outside the 1:1 plane • Property line to the bottom edge of the vault or the bottom of the excavation at the outside diameter for tanks: outside the 1:1 plane when an easement is not provided on the adjacent property

[1]Restrictions Specific to Contaminated Soil or Groundwater

Infiltration has the potential to mobilize contaminants present in soil and groundwater. Therefore, stormwater infiltration systems may not be constructed on sites where soil and/or groundwater contamination problems have been identified. In addition, infiltration is not permitted within 100 feet of a contaminated site or abandoned landfill. Infiltration within 500 feet of contaminated sites or abandoned landfills requires analysis and approval by a licensed hydrogeologist to determine whether stormwater can be safely infiltrated. Setbacks and exclusion areas shall be measured from the site of the proposed infiltration facility to the nearest extent of contamination, or if not known, the edge of the parcel where contamination has been found.

Contaminated sites are regulated by the U.S. Environmental Protection Agency (EPA) and the Washington State Department of Ecology (Ecology). EPA regulates contaminated sites under its Superfund and Resource Conservation and Recovery Act (RCRA) programs. The Superfund program regulates uncontrolled or abandoned hazardous waste sites where contaminants have been released onto the ground, or into streams, rivers, lakes, and other water bodies as a result of historical practices. RCRA regulates the disposal of solid and hazardous waste at active and future facilities to protect human health and the environment by ensuring that wastes are managed in an environmentally sound manner. EPA maintains a mapping tool that plots the locations of Superfund and RCRA-regulated sites: http://iaspub.epa.gov/apex/cimc/f?p=255:63:0:::::. To obtain information about whether specific sites have groundwater contamination problems, go to the websites for the individual programs:

A. EPA Superfund Program site list: http://www.epa.gov/superfund/sites/index.htm

B. EPA RCRA Program site list: http://www.epa.gov/epawaste/hazard/correctiveaction/facility/index.htm.

Ecology manages contaminated sites (e.g., sediment, industrial sites, hazardous waste sites, and leaking underground storage tanks) under its Toxics Cleanup Program. Facility site locations can be found at Ecology's website: http://www.ecy.wa.gov/fs/. To obtain information about whether specific sites have groundwater contamination problems, go to the toxics Cleanup Program website: http://www.ecy.wa.gov/cleanup.html.

D4-08 EASEMENT REQUIREMENTS

D4-08.1 General

Section 24.06.085 of the Storm and Surface Water Utility Code defines when easements are required for stormwater facilities, and other general easement requirements.

Drainage facilities that are constructed to serve predominantly public property or public right-of-way shall be publicly owned, per Section 24.06.085 of the Storm and Surface Water Utility Code, and shall be dedicated to the City.

Where possible, public conveyance systems shall be constructed within the public right-of-way. When site conditions make this infeasible, public drainage easements or dedicated tracts shall be provided. Private drainage facilities shall be constructed outside of the public right-of-way, on private property. Private easements may be needed.

When vehicle access for maintenance is required, a dedicated tract or access easement shall be provided. The access easement conditions shall prohibit the property owner from installing any structures, improvements, retaining walls, etc. which would hinder access to the drainage facility or necessitate restoration of access easement area.

Any required easement shall be obtained by the Developer at his sole expense.

D4-08.2 Easement Documentation Requirements

All easements shall be shown on the project plans and identified as "private" or "public", together with the width dimension and utility use, e.g. *20' Public Drainage Utility Easement.*

All documents for public easements shall conform to these Utilities Engineering Standards, will be provided on the City's easement template and shall comply with King County Recorder's Office formatting requirements. Include the King County tax parcel number(s), site address, owner names and site legal description. All pages must be numbered. Sheets shall be 8-1/2" by 11" or 8-1/2" by 14". Margins and font size must conform to King County recording format requirements.

Easements shall be dedicated to and approved by the City prior to acceptance of a public utility system. The Grantee shall be the "CITY OF BELLEVUE, a Washington municipal corporation, its heirs, successors and assigns". The City may require indemnification agreements to hold the City harmless where maintenance access across private property is deemed necessary.

The description contained within the easement document shall be prepared and stamped by a land surveyor licensed in the State of Washington. The description shall be identified as an Exhibit, together with the title of the utility use, e.g. *Permanent Public Drainage Utility*

Easement. The description shall be clearly written and referenced to the underlying property. The description shall be accompanied by an additional graphic Exhibit which depicts a scaled drawing of the easement location relative to the subject parcel.

Off-site easements shall be delivered to the Utility prior to issuing a Notification to Proceed with construction. Submittal of on-site easements may be delayed until completion of construction improvements.

Bills of Sale for all utility facilities appurtenant to public easements or tracts shall be given to the City.

D4-08.3 Easement Width Requirements

For pipes and vaults, the required utility easement width shall be: 1) the minimum value set forth below; or 2) determined by extending a line from the bottom edge of the structure or the bottom of the excavation at the outside diameter for pipes, at a 1 H : IV slope until it intercepts the finished grade, whichever is greater.

For pipes up to 18 inches in diameter, the minimum easement width shall be 15 feet.

For pipes/vaults greater than 18 inches and less than five (5) feet in width, the minimum easement width shall be 20 feet.

For pipes/vaults five (5) feet and greater in width, the minimum utility easement width shall be outside dimension plus 15 feet, rounded to the nearest whole foot, but not less than 20 feet in width.

For open channels to be maintained by the City, the utility easement width shall include the entire width of the channel (top-of-bank to top-of-bank or width at freeboard elevation) plus maintenance access when deemed necessary by the City. For privately-maintained open channels, the private utility easement width shall be, at minimum, the width of the channel at freeboard elevation.

For maintenance access roads, the minimum access easement width shall be 15 feet.

Storm drainage facilities shall be located in the center of the easement.

20' minimum easement shall be provided between buildings, on multi-family and commercial sites.

When passing between any two buildings (residential or commercial, etc.) which are 25' apart or less, the easement width shall extend the full width between the buildings and the depth of the sewer line shall not exceed 10'.

D4-08.4 Easement Documentation Requirements

See Section D4-08.2.

D4-09 PIPE COVERINGS AND ENCASEMENT

A1. Pipeline Encasement and Crossing 1

Stormwater pipelines shall be encased in a steel or class 52 ductile iron casing when crossing under improvements (e.g. retaining walls) where the ability to remove and replace pipe without disturbance to the improvement is needed. Casing is required when:

- Crossing under rockeries over four (4) feet high (measured from the bottom of the base rock to top of wall);
- Crossing under retaining wall footings over five (5) feet wide;
- Crossing under segmental block, crib, and reinforced earth-type retaining walls; and
- Crossing through retaining walls and pipe is buried.

Casings shall extend beyond the facing, footing and backfill reinforcement zone a minimum of five (5) feet or a distance equal to the depth of the pipe whichever is greater. The carrier pipe shall be supported by casing spacers when the casing length exceeds 10 feet. Where casing spacers are not used, the carrier pipe shall be more than 10 feet in length (no pipe joints inside casing).

If the cover is less than 3 feet between the bottom of footing or base rock, a casing is required regardless of wall height.

A2. Pipeline Encasement and Crossing 2

PVC pipe shall be encased in a steel or ductile iron casing when crossing under improvements where the ability to remove and replace pipe without disturbance to the improvement is needed. Casings are required when:

- Crossing under rockeries over 4' high.
- Crossing under retaining wall footings over 4' wide.
- Crossing under reinforced earth retaining walls (both wall and reinforcing material).

Casings shall extend a minimum of 5' past each edge of the improvement, or a distance equal to the depth of pipe, whichever is greater. The carrier pipe shall be supported by casing spacers where casing length exceeds 10'.

Minimum clearance between bottom of rockery and top of pipe or casing shall be 2 feet. The trench shall be backfilled with crushed rock.

B. Pipe Cover for Culverts and Underground Detention Systems

For high density polyethylene pipe (AASHTO M 294 Type S), the maximum fill depth is 15 feet measured to the top of the pipe.

For Polyvinyl chloride pipe (profile and solid wall), the maximum fill depth is 20 feet.

For reinforced concrete pipe, the maximum fill depth is 15 feet for class III pipe and 25 feet for class V pipe.

For pipes greater than 25 feet, pipe type shall be determined on a case-by-case basis with back up calculations provided by the Designer.

Minimum cover is 2 feet from the top of pipe to the finished grade or as recommended in writing by the manufacturer, whichever is greater.

For installations where minimum cover requirements cannot be met, use Ductile Iron (DI), Class 52 pipe.

C. Pipe Cover for Storm Drains

For corrugated polyethylene (CPE) pipe (AASHTO M 294 Type S), the maximum fill depth is 15 feet measured to the top of the pipe.

For Polyvinyl chloride pipe (profile and solid wall), the maximum fill depth is 25 feet.

For reinforced concrete pipe, the maximum fill depth is 15 feet for class III pipe and 25 feet for class V pipe.

For depths of cover greater than 25 feet, pipe type shall be determined on a case-by-case basis with back up calculations provided by the Designer.

Minimum cover is 2 feet from the top of pipe to the finished grade or as recommended in writing by the manufacturer, whichever is greater.

Depth of cover over PVC pipe shall be 3 feet minimum and 20 feet maximum. Pipe depths outside this range will require use of ductile iron (DI), Class 52 pipe, or pressure class PVC conforming to C900 or AWWA C905.

For corrugated polyethylene tubing (CPT), the maximum soil cover is one (1) foot.

All buried ductile iron pipe shall be encased in 8-mil polyethylene per AWWA C105.

END OF CHAPTER D4

CHAPTER D5 - WATER QUALITY BMPs

TABLE OF CONTENTS

D5-01 GENERAL D5-1
D5-02 SOURCE CONTROL BMPs D5-1
D5-03 RUNOFF TREATMENT BMPS D5-1
D5-03.1 General D5-1
D5-03.2 Treatment Facility Sizing D5-2
D5-03.3 Water Quality Design Flow Rate D5-2
D5-03.4 Treatment Facility Selection D5-3
D5-03.5 Treatment Facility Maintenance D5-3
D5-03.6 Oil Control D5-5
D5-03.7 Phosphorus Treatment D5-5
D5-03.8 Enhanced Treatment D5-6
D5-03.9 Basic Treatment D5-6

TABLE

No tables in this chapter.

FIGURE

Figure 5.1 Treatment Facility Selection Flow Chart D5-4

CHAPTER D5 - WATER QUALITY BEST MANAGEMENT PRACTICES

D5-01 GENERAL

When required by Section 24.06.065 of the Storm and Surface Water Utility Code and Section D2-05 of these Standards, surface water Best Management Practices (BMPs) shall be implemented to protect water quality in accordance with Volumes IV and V of the DOE Manual, as modified herein. These standards define approved water quality BMPs for new development and redevelopment in Bellevue.

Runoff treatment facilities, including those that serve multiple sites, are subject to all of the engineering and design requirements contained in the Storm and Surface Water Utility Code and these Standards. Conceptual site plans for all sites to be served by the proposed stormwater facilities shall be submitted to the City for review. Construction of facilities that serve multiple sites or a phased development must occur in conjunction with the first project or phase to be served by the runoff treatment facilities.

Pavement overlay or replacement shall comply with Redevelopment thresholds contained in BCC 24.06.065. Street and parking overlays are considered to be routine maintenance and are not considered to be redevelopment per Section 24.06.065(B) and (F) of the Storm and Surface Water Utility Code. Removal of pavement to subgrade and subsequent replacement (not including spot base repairs) is considered to be redevelopment and disturbance per Section 24.06.065(F) of the Storm and Surface Water Utility Code. Such reconstruction is not considered to be routine maintenance.

D5-02 SOURCE CONTROL BMPs

Source Control BMPs are preventive best management practices and include site design, use of alternative products, operation and maintenance procedures (good housekeeping), etc. The goal of source control BMPs is to keep contaminants associated with a development's activities from entering the storm and surface water system rather than having to remove contaminants later.

When required by Section 24.06.065 of the Storm and Surface Water Utility Code, source control BMPs shall be implemented. Source Control BMPs shall be designed and implemented in accordance with Volume IV of the DOE Manual as modified herein.

Garbage dumpsters shall be designed not to leak. Surface water from uncovered garbage dumpster areas shall discharge to the sanitary sewer if meeting the requirements of S3-01.4 (B) of these Standards. Any such dumpster area shall be bermed, and drainage shall be routed through an oil/water separator connected to the sanitary sewer.

D5-03 RUNOFF TREATMENT BMPS

D5-03.1 General

All water quality treatment facilities shall be designed in accordance with criteria set forth in Volume V of the DOE Manual as modified herein. On-site Stormwater Management BMPs are addressed in Chapter D6 of these standards. Thresholds for determining the implementation of Treatment Facilities (MR 6) versus On-Site Stormwater BMPs (MR 5) are defined in BCC 24.06 and Section D2-05 of these Standards.

In a residential subdivision where the stormwater facilities will be owned and operated by the City, runoff from the right-of-way and private properties in the subdivision may be combined and treated in a single facility.

If "clean" runoff is routed to the water quality facility, those flows must be included in the sizing calculations for the facility. Drainage from most landscaped areas is required to be treated. Areas in native vegetation should not be mixed with untreated runoff from the development, if feasible. Once runoff from non-pollutant generating areas is combined with runoff from contaminant-generating areas, it cannot be discharged without treatment.

Proprietary BMPs shall be accepted only if DOE has approved them for General Use (GULD) under DOE's emerging technologies program, per Chapter 12, Volume V of DOE Manual, and provided they meet required treatment level.

Runoff treatment BMPs are categorized by the type of contaminants most effectively removed. These categories are:

- Oil/Water Separation - Designed to remove and contain oil.
- Phosphorus Treatment - Designed to remove suspended and dissolved nutrients.
- Enhanced Treatment - Designed to remove more heavy metals than Basic Treatment. Application is targeted to areas that discharge to fish-bearing water bodies.
- Basic Treatment - Designed to remove particulates and contaminants typically associated with particulates, such as heavy metals.

D5-03.2 Treatment Facility Sizing

The Water Quality Design Storm Volume is the volume of runoff predicted from a 24-hour storm with a 6-month return frequency (a.k.a., 6-month, 24-hour storm). Alternatively, the 91st percentile, 24-hour runoff volume indicated by an approved continuous runoff model may be used.

Wetpool facilities are sized based upon the volume of runoff predicted through use of the Natural Resource Conservation Service curve number equations in Chapter 2 of Volume III of the DOE Manual, for the 6-month, 24- hour storm.

D5-03.3 Water Quality Design Flow Rate

1. Preceding Detention Facilities or when Detention Facilities are not required: Treat the flow rate at or below which 91% of the runoff volume, as estimated by an approved continuous runoff model. Design criteria for treatment facilities are assigned to achieve the applicable performance goal at the water quality design flow rate (e.g., 80% TSS removal).
2. Downstream of Detention Facilities: The water quality design flow rate must equal the full 2-year release rate from the detention facility. Alternative methods may be used if they identify volumes and flow rates that are at least equivalent. That portion of any development project in which the PGIS or PGPS thresholds are not exceeded (See D2-05) in a threshold discharge area shall apply On-site Stormwater Management BMPs in accordance with MR5.

D5-03.4 Treatment Facility Selection

Stormwater treatment facilities shall be selected in accordance with the process identified in Volume 1, Chapter 4 of the DOE Manual. Follow the step-by-step process for selecting the type of treatment facilities for individual projects as presented in Volume V, Chapter 2 of the DOE Manual, as modified by Sections D5-03.6, D5-03.7, D5-03.8 and D5-03.9 herein.

Figure 5.1 provides a graphical representation of the selection process. An addition to the selection process shown in the DOE Manual is Step 2a "Determine if Full Dispersion is practicable". See Section D6-03.1 for applications and limitations of Full Dispersion to complete Step 2a of Figure 5.1. Bioretention or pervious pavement used for runoff treatment shall meet the requirements listed in Section D6-01.1B and D6-03.2.

D5-03.5 Treatment Facility Maintenance

Stormwater treatment facilities shall be maintained in accordance with the current and any future editions of the City of Bellevue Maintenance Standards, and with the maintenance schedule in Volume V of the DOE Manual. Maintenance requirements shall be included in the O&M Manual described in D2-09.

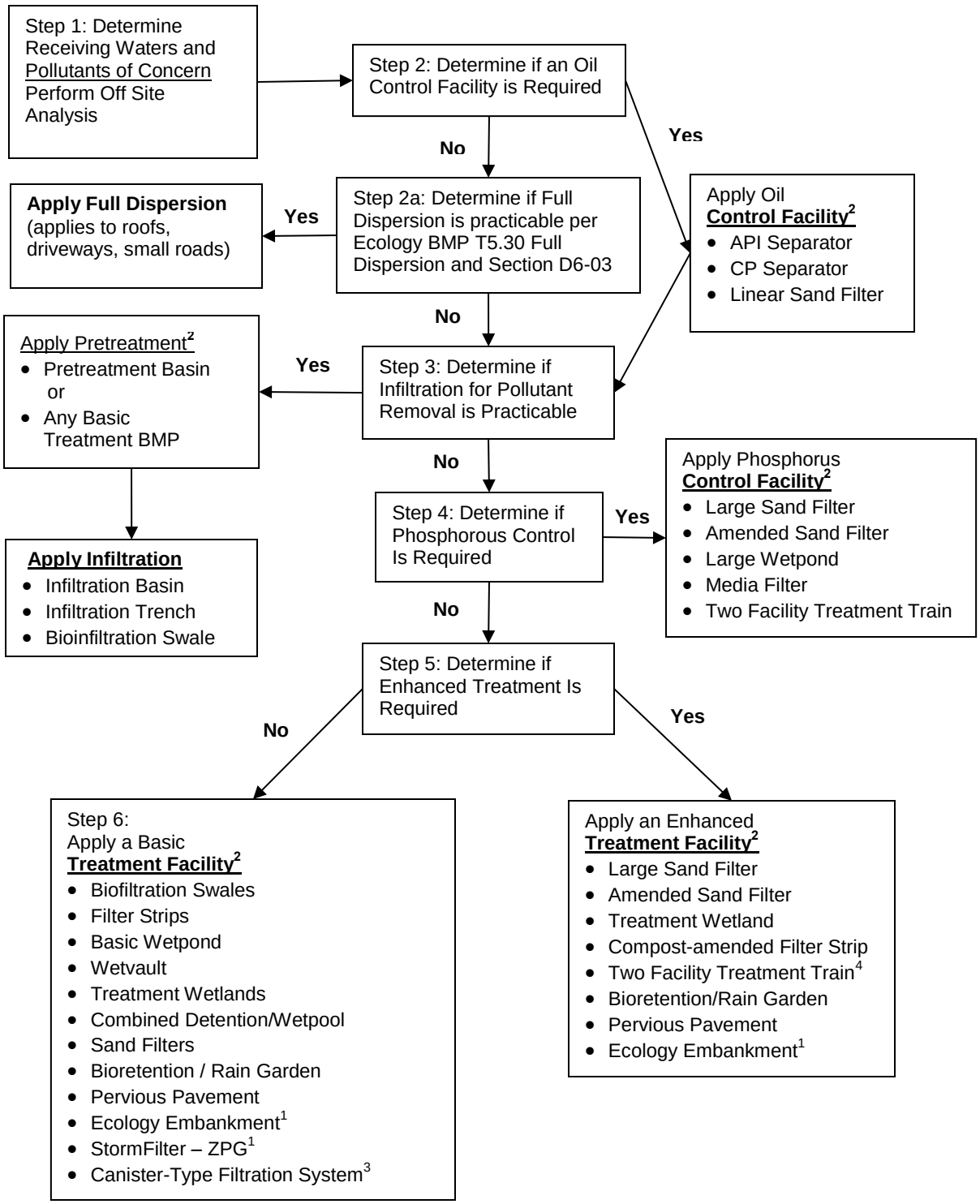

Figure 5.1 Treatment Facility Selection Flow Chart

Notes:
[1] See DOE Manual Volume V Chapter 3 Section 3.5 for more information.
[2] Facilities that have DOE General Use Level Designation (GULD) rating, or that are deemed by DOE to be functionally equivalent to approved facilities, are also allowed.
[3] Medium must be of type approved by DOE.

[4] See Table 3.2 in 2005 DOE Manual Volume V Chapter 3 Section 3.4 for types of facility combinations that are appropriate for the two facility treatment train.

D5-03.6 Oil Control

Treatment to achieve Oil Control applies to projects that have "high-use sites." High-use sites are those that typically generate high concentrations of oil due to high traffic turnover or the frequent transfer of oil. High-use sites include:

1. An area of a commercial or industrial site subject to an expected average daily traffic (ADT) count equal to or greater than 100 vehicles per 1,000 square feet of gross building area;
2. An area of a commercial or industrial site subject to petroleum storage and transfer in excess of 1,500 gallons per year, not including routinely delivered heating oil;
3. An area of a commercial or industrial site subject to parking, storage or maintenance of 25 or more vehicles that are over 10 tons gross weight (trucks, buses, trains, heavy equipment, etc.);
4. A road intersection with a measured ADT count of 25,000 vehicles or more on the main roadway and 15,000 vehicles or more on any intersecting roadway, excluding projects proposing primarily pedestrian or bicycle use improvements.

All Oil Control facilities shall be designed in accordance with criteria set forth in Volume V of the DOE Manual as modified herein.

Locate a spill control separator upstream from the detention system, or immediately before leaving the site if there is no detention system per section D4-06.1

Design Requirements for API and CP Separators

High-Flow Bypass: A high flow bypass is required if the separator is not capable of treating the 100-year storm peak runoff rate**.** Bypassing storm flows greater than the treatment capacity of the separator prevents "flushing" during peak events, substantially increases the effectiveness of the oil/water separator, and reduces size requirements.

Drainage Area: Uncontaminated water (roof runoff, pervious area runoff, etc.) should not drain to the oil/water separator.

D5-03.7 Phosphorus Treatment

All Phosphorus Treatment facilities shall be designed in accordance with criteria set forth in the DOE Manual, Volume V, Section 3.3 as modified herein.

Phosphorus treatment is required for land uses with potentially phosphorus-rich runoff, including but are not limited to: nurseries, gardening supplies, animal care and boarding facilities, golf courses, turf sports fields, livestock stables, paddocks and pastures.

Runoff from all project areas tributary to Larsen Lake, Phantom Lake, and Lake Sammamish shall require Phosphorus Treatment, except areas that typically do not generate pollutants. Surfaces that typically do not generate pollutants include roof areas (except uncoated metal

roofs) that do not receive organic debris and sidewalks. Such runoff need not be treated and may bypass the phosphorous treatment facility, if feasible.

The approved options for providing Phosphorus Treatment are listed in Figure 5.1 and presented in more detail in Volume V of the DOE Manual. Additional means of meeting the phosphorus treatment requirement may be approved by the City if the proposal fulfills the design criteria in the Department of Ecology's General Use Level Designation (GULD) approval process.

D5-03.8 Enhanced Treatment

All Enhanced Treatment facilities shall be designed in accordance with criteria set forth in Volume V of the DOE Manual as modified herein.

Enhanced treatment for reduction in dissolved metals is required for the following types of projects throughout Bellevue:

- Industrial project sites;
- Commercial project sites;
- Multi-family project sites; and
- High AADT roads as follows:
    1) Fully controlled and partially controlled limited access highways with Annual Average Daily Traffic (AADT) counts of 15,000 or more, and
    2) All other roads with an AADT of 7,500 or greater.

However, such sites listed above that discharge directly to Lake Washington (Basic Treatment Receiving Waters per Appendix I-C of the DOE Manual, except Lake Sammamish which requires Phosphorus Treatment) via an entirely closed piped conveyance system or via sheet flow from waterfront property are not subject to Enhanced Treatment Requirements. Areas of the above-listed project sites that are identified as being subject to Basic Treatment requirements are not subject to Enhanced Treatment requirements.

For developments with a mix of land use types, the Enhanced Treatment requirement shall apply when the runoff from the areas subject to the Enhanced Treatment requirement comprises 50% or more of the total runoff within a threshold discharge area.

D5-03.9 Basic Treatment

All Basic Treatment facilities shall be designed in accordance with criteria set forth in Volume V of the DOE Manual.

Basic Treatment generally applies to:

- Project sites that discharge to the ground, UNLESS:

  1) The soil suitability criteria for infiltration treatment are met; (see Chapter 3 of Volume III of the DOE Manual for soil suitability criteria) or

  2) The project uses infiltration strictly for flow control – not treatment - and the discharge is within ¼-mile of a phosphorus sensitive lake (use a Phosphorus Treatment facility), or within ¼ mile of a fish-bearing stream or lake (use an Enhanced Treatment facility). Phosphorous sensitive lakes include Larsen Lake, Phantom Lake, and Lake Sammamish.

- Residential projects not otherwise needing phosphorus control as designated by Section D5-03.7, the US EPA, or the Department of Ecology; and
- Project sites discharging directly to Lake Washington(lakes listed in Appendix I-C of the DOE Manual except Lake Sammamish, which requires Phosphorus Treatment); and
- Landscaped areas of industrial, commercial, and multi-family project sites, and parking lots of industrial and commercial project sites that do not involve pollution-generating sources (e.g., industrial activities, customer parking, storage of erodible or leachable material, wastes or chemicals) other than parking of employees' private vehicles.

For developments with a mix of land use types, the Basic Treatment requirement shall apply when the runoff from the areas subject to the Basic Treatment requirement comprises 50% or more of the total runoff within a threshold discharge area.

END OF CHAPTER D5

CHAPTER D6 – ON-SITE STORMWATER MANAGEMENT

TABLE OF CONTENTS

D6-01 GENERAL D6-1
D6-01.1 Using On-Site Stormwater Management to meet Storm and Surface Water Utility Code Requirements D6-1
D6-02 SITE SUITABILITY AND BMP SELECTION D6-8
D6-02.1 Introduction D6-8
D6-02.2 Step 1: Characterize Site Infiltration Capabilities D6-8
D6-02.3 Step 2: Site Layout and Use D6-10
D6-02.4 Step 3: Runoff Sources and BMP Selection D6-10
D6-03 DESIGN, SIZING, CONSTRUCTION AND MAINTENANCE D6-12
D6-03.1 Required On-Site Stormwater Management Practices D6-12
D6-03.2 Natural Drainage Practices (NDPs) D6-16
D6-03.3 Sizing Factors for On-site Stormwater BMPs D6-45
D6-03.4 Flow Control Credits for On-site Stormwater Management BMPs D6-49
D6-03.5 Maintenance D6-53
D6-04 NDP MATERIALS D6-53
D6-04.1 Bioretention D6-53
D6-04.2 Pervious Pavement D6-59
D6-04.3 Underdrain for Bioretention or Pervious Pavement D6-61
D6-04.4 Observation Ports for Bioretention or Pervious Pavement D6-61
D6-04.5 Amended Soil D6-62
D6-04.6 Roof Downspout Dispersion D6-62
D6-04.7 Rain Recycling D6-62
D6-04.8 Vegetated Roofs D6-63
D6-04.9 Construction Requirements D6-63
D6-04.10 Miscellaneous Products D6-63

TABLES

Table 6.1. Required Tier 1 On-site Stormwater Management BMPs D6-4

Table 6.2A. Required Tier 2 On-site Stormwater Management BMPs D6-5

Table 6.2B. Natural Drainage Practices (NDPs) Allowed as Alternatives to or in Addition to Required Tier 2 BMPs D6-5

Table 6.3. Required Tier 3 BMPs D6-6

Table 6.4. On-site Stormwater Management BMPs for Runoff Treatment D6-7

Table 6.5. On-site Stormwater BMP Selection Matrix. D6-11

Table 6.6. Continuous Modeling Assumptions for Bioretention Cells and Bioretention Swales. D6-23

Table 6.7. Continuous Modeling Assumptions for Bioretention Planters. D6-28

Table 6.8. Continuous Modeling Assumptions for Pervious Pavement. D6-33

Table 6.9. Spreadsheet-Based Modeling Assumptions for Rain Barrels or Cisterns with Water Reuse. D6-37

Table 6.10. Continuous Modeling Assumptions for Cisterns with Detention. D6-38

Table 6.11. Continuous Modeling Assumptions for Vegetated Roofs. D6-41

Table 6.12. Continuous Modeling Assumptions for Reverse Slope Sidewalks. D6-43

Table 6.13. Sizing Factors for On-site BMPs. D6-49

Table 6.14. Flow Control Credits. D6-53

Table 6.15. Bioretention Soil Mix – Quantities using on-site (native) soils D6-56

Table 6.16. Plants for Vegetated Roofs D6-63

FIGURES

Figure 6.1. On-site Stormwater Management Facility Selection for MR5 and MR7. ..... D6-3

Figure 6.2. Schematic for calculating Bottom Length and Effective Total Depth for bioretention or pervious pavement on slopes where check dams (berms) are used. Refer to Table 6.6 for Bioretention Cells and Bioretention Swales, and Table 6.8 for Pervious Pavement formulas... D6-22

CHAPTER D6 – ON-SITE STORMWATER MANAGEMENT

D6-01 GENERAL

On-site stormwater management BMPs infiltrate, disperse, and retain stormwater on-site in order to reduce the volume, peak flow rates, and amount of pollutants in stormwater runoff leaving a developed project site. The following on-site stormwater management BMPs are required where site conditions allow without causing erosion or flooding: Roof Downspout Control BMPs functionally equivalent to those described in Chapter 3 of Volume III of the DOE Manual; and Dispersion and Soil Quality BMPs functionally equivalent to those in Chapter 5 of Volume V of the DOE Manual.

Natural Drainage Practices (NDPs) are included here as a sub-set of on-site stormwater management BMPs, and include bioretention, pervious pavement, rain recycling, and vegetated roofs. These NDPs are encouraged as an integral part of site designs. New BMPs that DOE has approved for General Use (GULD) under DOE's emerging technology program, per Chapter 12, Volume V of the DOE Manual, are allowed. Using NDPs in addition to or in place of the required on-site BMPs (where NDP substitution is allowed) can significantly enhance the overall hydrologic performance of the developed site and further reduce downstream flooding, erosion, water quality impacts, and long-term maintenance requirements. NDPs can also enhance site sustainability and aesthetics, and may add points under LEED and Built Green certification programs.

This chapter provides detailed guidance on how to use the criteria set forth in Section 24.06.065(G) of the Storm and Surface Water Utility Code and design guidelines in the LID Technical Guidance Manual and Chapter 3 of Volume III and Chapter 5 of Volume V of the DOE Manual, as modified herein, to plan, design and construct on-site stormwater management BMPs and NDPs. The remainder of this section describes how to apply on-site stormwater management BMPs to meet Minimum Requirement 5 (On-Site Stormwater Management), MR6 (Runoff Treatment), and MR7 (Flow Control).

D6-01.1 Using On-Site Stormwater Management to meet Storm and Surface Water Utility Code Requirements

Under the Storm and Surface Water Utility Code (BCC 24.06.065), new development, redevelopment, and construction activities that meet the thresholds defined in Section D2-05 are required to provide on-site stormwater management (MR5), runoff treatment (MR6), and/or flow control (MR7). This section describes how on-site stormwater management BMPs may be used to meet those minimum requirements.

A. On-Site Stormwater Management (Minimum Requirement 5)

Required for projects with new, replaced, or new plus replaced impervious surface areas equal to or greater than 2,000 square feet.

Following is a tiered list of Best Management Practices (BMPs) that must be evaluated for each project that triggers on-site stormwater management (Figure 6.1). The BMPs must be evaluated and implemented in the order presented within each of three tiers:

- Tier 1 – Minimize Runoff Generation (Table 6.1);

- Tier 2 – Retain Runoff On-Site (Tables 6.2A and 6.2B); and
- Tier 3 – Infiltrate or Disperse Runoff Prior to Discharge (Table 6.3).

After required on-site stormwater management BMPs are implemented to the extent feasible, additional BMPs from Table 6.2B may be implemented as site conditions allow. On-site stormwater management BMPs, including NDPs, may be used to reduce runoff treatment and/or flow control requirements when designed and sized per Section D6-03.

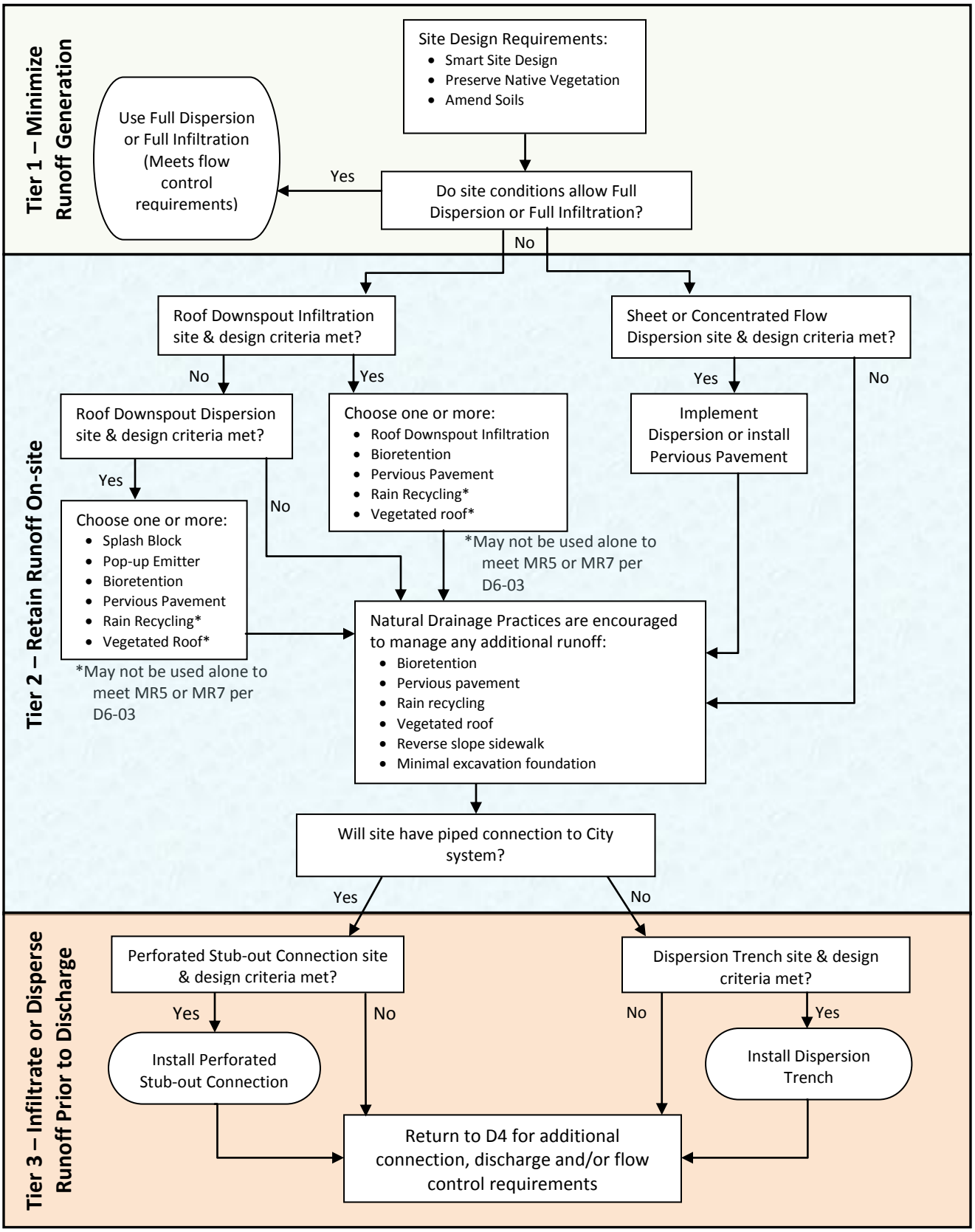

Figure 6.1. On-site Stormwater Management Facility Selection for MR5 and MR7.

Tier 1 - Minimize Runoff Generation

The first priority in managing stormwater runoff on-site is to minimize the amount of stormwater runoff that is generated. Each project is required to evaluate these Tier 1 BMPs in the order presented in Table 6.1 and must implement all Tier 1 techniques that are applicable to the site without causing erosion or flooding on-site or downstream.

Table 6.1. Required Tier 1 On-site Stormwater Management BMPs

BMP	Description	Applicability	Requirements
Smart Site Design	Site layout and design techniques that minimize disturbance of the hydrologic cycle	All projects	Comply with LUC 20.20.460 – Impervious surface limits. Comply with Section D6-03.1 B
Preserve Native Vegetation	Set aside native growth areas in Native Growth Protection Easement (NGPE); preserve significant trees	All projects	Comply with LUC 20.20.900 – Tree Preservation, exceed where feasible. If possible, record NGPE against property per LUC 20.25H.030.B.2. Restore previously disturbed areas with native vegetation. Comply with Section D6-03.1 C
Full Dispersion or Full Infiltration	Full Dispersion: Disperse runoff from 90-100 percent of impervious surfaces; in some cases, retain 35-65% native vegetation in a Native Growth Protection Easement Full Infiltration: Infiltrate 100% of site runoff	Limited applicability – see Requirements	No runoff treatment or flow control required if site fully dispersed or fully infiltrated. Comply with Section D6-03.1 A
Amended Soils	Preserve native soils or amend with compost	All projects	Required for all disturbed pervious areas. Comply with Section D6-03.1 D

Tier 2 - Retain Runoff On-site

After all Tier 1 BMPs have been evaluated and implemented per the requirements in Table 6.1, the following Tier 2 BMPs must be evaluated for implementation in the order presented to retain runoff that is generated by the project. All runoff from impervious surfaces should be managed with at least one of the following BMPs from Table 6.2A as site conditions allow, without causing erosion or flooding on-site or downstream. NDPs may be substituted for the required roof downspout controls and dispersion BMPs or used in addition to those required BMPs wherever site conditions allow and design criteria can be met (Table 6.2B).

Maximizing on-site stormwater management through the use of roof downspout control and dispersion BMPs in combination with NDPs may eliminate or substantially reduce flow control requirements (MR7), thereby reducing construction costs and long-term maintenance requirements, as well as help reduce local and regional flooding.

Table 6.2A. Required Tier 2 On-site Stormwater Management BMPs

BMP	Description	Applicability	Requirements
Roof Downspout Infiltration	Infiltration Trench or Drywell Allowable alternatives include minimal excavation foundation or directing roof runoff to bioretention or pervious pavement; can also combine with rain recycling or vegetated roof. See Table 6.2B	Residential and small commercial lots	Required where design criteria and setbacks are met Comply with Section D6-03.1 E
Roof Downspout Dispersion – Splash Blocks or Pop-up Drainage Emitter	Connect roof downspouts to splash blocks or pop-up drainage emitters Allowable alternatives include minimal excavation foundation or directing roof runoff to bioretention or pervious pavement; can also combine with rain recycling or vegetated roof. See Table 6.2B	Residential and small commercial lots	Required where design criteria and setbacks are met if Downspout Infiltration is not feasible. Comply with Section D6-03.1 F
Concentrated and Sheet Flow Dispersion	Flow dispersion for pavement, patios and other impervious surfaces, and roofs without gutters Allowable alternatives include pervious pavement, minimal excavation foundations, and reverse slope sidewalks where conditions allow. See Table 6.2B	Residential and small commercial lots, roads	Required where design criteria and setbacks are met Comply with Section D6-03.1 G

Table 6.2B. Natural Drainage Practices (NDPs) Allowed as Alternatives to or in Addition to Required Tier 2 BMPs

NDP	Description	Applicability	Requirements
Bioretention	Rain Garden; Bioretention Cells; Bioretention Swale; or Downspout Planter Box	All projects	Comply with Section D6-03.2 A
Pervious Pavement	Pervious concrete or asphalt; Modular block; underlying aggregate stores water Roof runoff may be directed to pervious pavement	All projects	Comply with Section D6-03.2 B LUC 20.20.460(G) may apply (impervious surface limits)
Rain Recycling	Rain barrels or cisterns for flow control, irrigation, or indoor reuse of harvested water	All projects	Comply with Section D6-03.2 C
Vegetated Roof	Roof with light-weight soil mix and plants	All projects	Comply with Section D6-03.2 D
Reverse Slope Sidewalk	Sidewalk or walkway sloped towards wide vegetated area	All projects	Comply with Section D6-03.2 E
Minimal Excavation Foundation Systems	Building, deck or walkway supported by pin, pile or post systems, minimal grading of native soil	All projects	Comply with Section D6-03.2 F

Tier 3 - Infiltrate or Disperse Runoff Prior to Discharging

After evaluating and implementing all possible techniques and BMPs from Tiers 1 and 2, the following techniques must be implemented in the order presented below and used to

infiltrate or disperse as much of the remaining runoff as possible, as site conditions allow, without causing flooding or erosion.

Table 6.3. Required Tier 3 BMPs

BMP	Description	Applicability	Requirements
Perforated Stub-out Connection	Runoff to existing storm pipe directed via underground perforated pipe in a rock trench.	All projects with storm conveyance system connection	Required for any connection to a storm conveyance system, where design criteria are met. Comply with Section D6-03.1 H
Dispersion Trench	Gravel-filled trench with adequate vegetated flow path. May include pump if site conditions require.	Use only where other BMPs do not fully mitigate runoff	Required as an outfall when connection to a storm conveyance system is not available and design criteria are met. Comply with Section D6-03.1 F

Refer to Sections D6-03.1 and D6-03.2 for design, sizing, construction, and maintenance methods for on-site BMPs and NDPs. Sizing Factors for determining the minimum sizes necessary to meet on-site stormwater management requirements, based on the amount of impervious area draining to each facility, are provided in Section D6-03.3C.

B. Runoff Treatment (Minimum Requirement 6)

Full dispersion and Infiltration NDPs, including bioretention and pervious pavement, are preferred methods for meeting water quality treatment requirements.

Full dispersion may be applied to entire sites or portions of sites with at least 35% of native vegetation preserved in a dedicated NGPE, or to road projects meeting the requirements for full dispersion credit in Section 7.2 of the LID Manual. Sites that correctly implement full dispersion in accordance with all applicable design requirements do not need additional runoff treatment.

Bioretention can be used to meet basic and enhanced water quality treatment requirements. The bioretention facility must be sized to infiltrate at least 91 percent of the average annual runoff from the contributing pollution-generating surface area into the bioretention soil mix layer. The bioretention soil mix layer must meet the *Soil Physical and Chemical Suitability for Treatment* requirements in Chapter 3 of Volume III of the DOE Manual. Underdrains may be used, if needed, to meet facility drawdown requirements. See Section D6-03.2(A) for bioretention design criteria.

Pervious pavement can also be used to meet basic and enhanced water quality treatment requirements if it is sized to infiltrate at least 91 percent of the average annual runoff from the contributing PGIS area into underlying soils that meet the *Soil Physical and Chemical Suitability for Treatment* requirements in Chapter 3 of Volume III of the DOE Manual. Underdrains may be used, if needed, to meet facility drawdown requirements provided that a “treatment layer” is installed over the underdrains in accordance with Section 4.4.2 of Volume V of the DOE Manual. See Section D6-03.2(B) for pervious pavement design criteria.

Some of the required on-site stormwater BMPs, including amended soil and dispersion, can be used to partially satisfy runoff treatment requirements; for example, runoff can be dispersed through areas with amended soils. In addition, site design practices and vegetation retention be used to reduce the amount of PGIS and PGPS requiring treatment. Rain recycling and vegetated

roofs cannot be used to satisfy runoff treatment. No on-site stormwater BMPs can be used for oil/water separation.

Table 6.4 summarizes the type of water quality treatment for which each on-site stormwater management BMP may be used and provides references to the appropriate design and sizing criteria.

Table 6.4. On-site Stormwater Management BMPs for Runoff Treatment

BMP	Oil/Water Separation	Phosphorous Treatment	Enhanced Treatment	Basic Water Quality Treatment	Design and Sizing Criteria
Amended Soil[a]	No	No	No	No	DOE Manual Chapter 5 of Vol. V; Soils for Salmon[b]
Full Dispersion	No	Yes	Yes	Yes	LID Manual Chapter 7
Full Infiltration	No	Yes	Yes	Yes	DOE Manual, Volume III, 3.3.9(A)
Bioretention	No	No	Yes	Yes	D6-03.2 A
Pervious Pavement	No	No	Yes[c]	Yes[c]	D6-03.2 B
Rain Recycling	No[d]	No[d]	No[d]	No[d]	D6-03.2 C
Vegetated Roofs	No[d]	No[d]	No[d]	No[d]	D6-03.2 D
Reverse Slope Sidewalks	No[d]	No[d]	No[d]	No[d]	D6-03.2 E
Minimal Excavation Foundation Systems	No[d]	No[d]	No[d]	No[d]	D6-03.2 F

a. Areas meeting the criteria for full dispersion or full infiltration credit shall be excluded from runoff treatment requirements. Amended soil areas shall be modeled as landscape unless used to meet full dispersion requirements.

b. Source: (Guidelines and Resources for Implementing Soil Quality and Depth BMP T5.13 in WDOE Stormwater Management Manual for Western Washington, 2009 Edition).

c. Provides treatment if underlain by soils that meet *Soil Physical and Chemical Suitability for Treatment* requirements in Chapter 3 of Volume III of the DOE Manual, including minimum depth (18 inches), minimum cation exchange capacity, minimum organic content and maximum infiltration rate.

d. These BMPs are not capable of meeting water quality treatment requirements. Further, some of these NDPs typically receive only roof runoff, which does not require treatment.

Refer to Sections D6-03.1 and D6-03.2 for design, sizing, construction, and maintenance methods for BMPs and NDPs. See also Chapter D5 for more information on water quality treatment BMPs. Sizing Factors for meeting runoff treatment are provided in Section D6-03.3 C. ***While these factors may be used as a guideline in preliminary sizing and/or as a simplified check for the reviewer, the NDPs must be designed by a professional engineer to satisfy runoff treatment requirements (MR6)***.

C. Flow Control (Minimum Requirement 7)

Dispersion and infiltration BMPs, including the Infiltration NDPs (bioretention and pervious pavement), are highly effective in controlling runoff volumes, peak flow rates, and the duration of erosive flows. These BMPs are preferred for meeting flow control requirements. See Section D3-05 of these Standards for flow control exemptions. Full dispersion or full infiltration may be used to satisfy all flow control requirements on residential sites or road projects where design criteria are met. Infiltration BMPs may be applied to fully or partially meet flow control requirements. Partial infiltration BMPs, including infiltration trenches and bioretention with underdrains, can also be used to partially or fully satisfy flow control, depending on native soil design infiltration rates and facility geometry. Rain recycling cisterns with orifice-controlled outlets can also be effective at detaining peak flows, while rain recycling facilities that incorporate extensive reuse (indoor and/or outdoor) of harvested rainwater can effectively reduce stormwater runoff volumes and peak durations. (Note: indoor use of rainwater must conform to plumbing regulations.) Finally, vegetated roofs can absorb and evapotranspirate some of the rain that falls onto the surface, thereby reducing peak flow rates and providing some flow volume reduction.

Refer to Sections D6-03.1 and D6-03.2 for design, sizing, construction, and maintenance methods for on-site BMPs, including NDPs. Sizing Factors to meet flow control requirements are provided in Section D6-03.3. ***While these factors may be used as a guideline in preliminary sizing and/or as a simplified check for the reviewer, the NDPs must be designed by a professional engineer to satisfy flow control requirements (MR7).*** Flow Control Credits that can be applied to reduce the size of downstream flow control facilities are provided in Section D6-03.4.

D6-02 SITE SUITABILITY AND BMP SELECTION

D6-02.1 Introduction

This section contains guidelines to aid designers and reviewers in characterizing development sites, in selecting the most appropriate BMPs for the site, and in meeting on-site stormwater management requirements.

These guidelines contain three steps for on-site BMP site assessment and selection:

1) Characterize Site Infiltration Capabilities, 2) Site Layout and Use, and 3) Runoff Sources and BMP Selection.

D6-02.2 Step 1: Characterize Site Infiltration Capabilities

During Step 1, the Developer must map the development site according to its potential infiltration capabilities, categorizing site areas based on the topographic and soil conditions that constrain the use and appropriateness of on-site stormwater BMPs. In general, infiltration BMPs are more effective in flatter areas than steeper areas. While outwash soils typically have higher infiltration rates than till soils, soils with design infiltration rates as low as 0.25 inches per hour can be well suited for small-scale infiltration or partial infiltration BMPs that receive runoff from small contributing drainage areas relative to the BMP footprint size.

Step 1 entails three sub-steps, including Step 1a: Identify Site Slopes and Critical Areas, Step 1b: Identify Depth to Groundwater, and Step 1c: Characterize Site Soils and Determine Infiltration Rates. Each of these sub-steps is described below.

A. Step 1a: Identify Site Slopes and Critical Areas

Using the boundary and topographic survey for the site, identify areas that have slopes between 0 to 15% slopes, >15% to 33% slopes, and greater than 33% slopes based on the existing contours. Where grading is planned for proposed pavement or landscaped areas of the site, use the proposed contours shown on the grading plan instead of the existing contours for this sub-step. Steep slope areas that are classified as Critical Areas (Steep Slopes or Landslide Hazard areas) must also be identified on the map, along with required buffers. Refer to LUC 20.25H for more information on Critical Areas.

Proposed Buildings

For buildings, identify the proposed slope and structural capacity of the roofs and whether vegetated roofs are being considered for the site. Vegetated roofs are permitted on roofs with up to 20 percent slopes. A licensed structural Engineer must design the vegetated roof and demonstrate that the building has sufficient structural capacity to support the expected loads. Refer Section D6-03.2 D for design guidance on vegetated roofs.

B. Step 1b: Identify Depth to Groundwater

The next step is to identify areas where shallow seasonal groundwater will limit the infiltration capacity of the site or not allow sufficient water quality treatment prior to discharge to the groundwater table. Section D4-06.7(C) provides instructions for evaluating the depth to groundwater. Projects that do not trigger runoff treatment (MR6) or flow control (MR7) are not required to monitor groundwater levels and may rely on observations made using the simple infiltration test (Section D4-06.7(D)) and/or preliminary data available from the Pacific Northwest Center for Geologic Mapping Studies, at the GeoMapNW web site (see Section D1-03).

C. Step 1c: Characterize Site Soils and Determine Infiltration Rates

In areas where there is sufficient depth to the groundwater table, determine the soil type, texture, and infiltration rate of site soils in various locations where infiltration facilities such as bioretention cells, pervious pavement, or infiltration trenches may be constructed. If modeling will be used, determine soil type categories as Natural Resource Conservation Services (NRCS, formerly Soil Conservation Service): Hydrologic Soil Group A/B (outwash), C/D (till), or saturated (wetland). While both till and outwash soils are capable of meeting flow control requirements, till soils typically have lower infiltration rates and larger facility sizes may be required. However, ***the minimum design infiltration rate for which Infiltration NDPs (bioretention, pervious pavement) may be used is 0.25 inches per hour***, which many till soils may exhibit. For sites with relatively low infiltration rates, it is important to keep the size of the contributing drainage area relatively small with respect to the available footprint for the infiltration BMP. Section D6-03.3 provides Sizing Factors for infiltration BMPs for design infiltration rates ranging from 0.25 inches per hour to 1.0 inch per hour or greater. All infiltration rates in Table 6.13 represent design infiltration rates (measured infiltration rates with appropriate correction factors applied).

Refer to Sections D2-06 (Site Planning and Submittals) and D4-06.7 (Infiltration Systems) for methods to be used for identifying site soils and determining the infiltration rates for the native soils. For projects not required to meet runoff treatment or flow control standards, a simplified method for infiltration testing may be used, per D4-06.7(D). See Section D6-03 for on-site BMP sizing.

D6-02.3 Step 2: Site Layout and Use

Development projects that trigger on-site stormwater management must use Smart Site Design practices (Section D6-03.1 B).

In addition to these Smart Site Design practices, site layout and use also includes consideration of setback requirements (Section D4-07) and locating BMPs to take advantage of existing topography and soils. Consideration is also given in this step for where run-on is allowed (e.g., pervious pavement, dispersal areas) and not allowed (e.g., roadways).

D6-02.4 Step 3: Runoff Sources and BMP Selection

In this step, the designer will select appropriate on-site BMPs using Table 6.5. Because development impacts are greatest where impervious surfaces will be created, it is most efficient to first identify the appropriate BMPs to control runoff from each impervious surface on a case-by-case basis. The nature of the runoff source is important in determining the appropriate BMP to use. For example, vegetated roofs are obviously appropriate only for mitigating roof runoff. Runoff from streets or other traffic areas should ideally drain to facilities that can treat runoff.

To use the BMP selection matrix, first divide the proposed site into the various runoff sources: roofs, streets (including parking areas and driveways), pedestrian hardscapes (such as sidewalks), and lawns/landscaping. Then look at the proposed impervious areas (roofs, streets, and sidewalks) and determine if BMPs at the source are possible (e.g., pervious pavement) or where runoff may be conveyed. Finally, for each potential area where runoff can be conveyed, identify the character and use of the receiving location. The BMPs to be considered are summarized in the appropriate cells of the selection matrix. If on-site stormwater BMPs are not feasible due to site limitations and design requirements, return to the appropriate section of Chapters D3, D4 or D5 of these Standards to proceed with standard requirements. This process may be repeated for developed pervious areas (lawns/landscaping) if additional runoff mitigation is required.

Table 6.5. On-site Stormwater BMP Selection Matrix.

Step 1: Characterize Site Infiltration Capabilities **Finished Slope/Design Infiltration Rate**	**Step 2: Site Layout and Use** **Use of Proposed BMP Location**	**Step 3: Runoff Sources and BMP Selection**			
		Roof	**Driveway/ Street/ Parking Lot (not High Vehicle Traffic Area)**	**Pedestrian/ Bike Hardscape**	**Landscape or Lawn**
0-15% Slope ≥ 0.25 inch/hour Infiltration	Natural Vegetation[1]	Splash Block, Pop-up Emitter, Sheet Flow Dispersion, Rain Recycling, Minimal Excavation Foundation	Concentrated or Sheet Flow Dispersion	Concentrated or Sheet Flow Dispersion, Reverse Slope Sidewalk	Amended Soils, Concentrated or Sheet Flow Dispersion
	Landscape/Lawn	Roof Downspout Infiltration, Roof Downspout Dispersion, Rain Recycling, Bioretention, Sheet Flow Dispersion, Perforated Stub-out Connection, Minimal Excavation Foundation	Amended Soils, Concentrated or Sheet Flow Dispersion, Bioretention, Pervious Pavement[2]	Amended Soils, Concentrated or Sheet Flow Dispersion, Bioretention, Pervious Pavement[2], Reverse Slope Sidewalk, Minimal Excavation Foundation	Amended Soils, Bioretention, Pervious Pavement[2, 3]
	Pedestrian/Bike	Roof Downspout Infiltration, Pervious Pavement[2], Rain Recycling, Perforated Stub-out Connection	Pervious Pavement[2], Concentrated or Sheet Flow Dispersion	Concentrated or Sheet Flow Dispersion, Pervious Pavement[2]	Pervious Pavement[2]
	Traffic	Roof Downspout Infiltration, Pervious Pavement[2], Rain Recycling	Pervious Pavement[2]	Pervious Pavement[2]	Pervious Pavement[2]
0-15% Slope <0.25 inch/hour Infiltration	Natural Vegetation[1]	Splash Block, Pop-up Emitter, Sheet Flow Dispersion, Rain Recycling, Minimal Excavation Foundation	Concentrated or Sheet Flow Dispersion	Concentrated or Sheet Flow Dispersion, Reverse Slope Sidewalk[2]	Amended Soils, Concentrated or Sheet Flow Dispersion
	Landscape/Lawn	Splash Block, Pop-up Emitter, Bioretention, Rain Recycling, Dispersion Trench, Perforated Stub-out Connection	Amended Soils, Concentrated or Sheet Flow Dispersion, Bioretention	Amended Soils, Concentrated or Sheet Flow Dispersion, Bioretention, Reverse Slope Sidewalk[2], Minimal Excavation Foundation	Amended Soils, Concentrated or Sheet Flow Dispersion, Bioretention
	Pedestrian/Bike	Rain Recycling, Perforated Stub-out Connection	Concentrated or Sheet Flow Dispersion	Concentrated or Sheet Flow Dispersion	Not applicable
	Traffic (not high-use site)	Rain Recycling	Not applicable	Not applicable	Not applicable

Table 6.5. On-site Stormwater BMP Selection Matrix.

Step 1: Characterize Site Infiltration Capabilities Finished Slope/Design Infiltration Rate	Step 2: Site Layout and Use Use of Proposed BMP Location	Step 3: Runoff Sources and BMP Selection			
		Roof	Driveway/ Street/ Parking Lot (not High Vehicle Traffic Area)	Pedestrian/ Bike Hardscape	Landscape or Lawn
>15-33% Slope ≥ 0.25 inch/hour infiltration	Natural Vegetation[1]	Splash Block[2], Pop-up Emitter[2], Sheet Flow Dispersion[2], Rain Recycling, Minimal Excavation Foundation	Concentrated or Sheet Flow Dispersion[2]	Concentrated or Sheet Flow Dispersion[2]	Concentrated or Sheet Flow Dispersion[2]
	Landscape/Lawn	Splash Block[2], Pop-up Emitter[2], Rain Recycling, Dispersion Trench[2], Perforated Stub-out Connection[2], Minimal Excavation Foundation	Amended Soils, Concentrated or Sheet Flow Dispersion[2]	Concentrated or Sheet Flow Dispersion[2]	Amended Soils
	Pedestrian/Bike	Rain Recycling, Perforated Stub-out Connection[2]	Concentrated or Sheet Flow Dispersion[2]	Concentrated or Sheet Flow Dispersion[2]	Concentrated or Sheet Flow Dispersion[2]
	Traffic (not high-use site)	Rain Recycling	Not applicable	Not applicable	Not applicable
>33% Slope or High Groundwater	All	Vegetated Roofs, Rain Recycling, and Minimal Excavation Foundation Systems are recommended. Infiltration and dispersion BMPs are prohibited.			
Roof 0-20% with Excess Load Capacity		Vegetated Roof	Not applicable	Not applicable	Not applicable
Roof >20% and/or No Excess Load Capacity		Vegetated Roof prohibited	Not applicable	Not applicable	Not applicable

[1] Natural vegetation areas may not be disturbed for BMP installation, but may be used as vegetated flow paths.
[2] See Section D6-03 for additional slope restrictions.
[3] Grass paving in accordance with Standard Detail NDP-12.

D6-03 DESIGN, SIZING, CONSTRUCTION AND MAINTENANCE

D6-03.1 Required On-Site Stormwater Management Practices

Projects meeting the thresholds in D2-05 shall employ the required On-site Stormwater Management Practices in this section, or other practices approved in writing by DOE as functionally equivalent, to infiltrate, disperse and retain stormwater runoff on site to the maximum extent practicable without causing flooding or erosion impacts.

A. Full Dispersion and Full Infiltration

Description, Applicability and Limitations

Full dispersion should be considered for large residential developments, parks, commercial, and road projects meeting the criteria in the LID Manual, Section 7.2. These criteria

generally include substantial native vegetation, long vegetated flow paths, particular soil types, low-volume roads for road projects, deep groundwater, and slope restrictions. Dispersion may be considered for runoff from roofs, pavement, and other impervious surfaces; approved methods for roads include sheet flow or collecting and re-dispersing stormwater.

Sites that can achieve full infiltration per the DOE Manual Volume III, Section 3.3.9, or full dispersion per the DOE Manual Volume V, Chapter 5, BMP T5.30 and Section 7.2 of the LID Manual are not required to provide additional runoff treatment (MR6) or flow control (MR7) facilities.

Design and Sizing

Design and size full dispersion per the DOE Manual, Volume V, Section 5.3.3, BMP T5.30 Full Dispersion, and the LID Manual, Section 7.2.

Full Dispersion credit will be given to sites with a maximum of 10% effective (connected) impervious area that is dispersed through 35 to 65% of the site maintained in natural vegetation and protected with a Native Growth Protection Easement (see LUC 20.25H.030.B.2).

Impervious surfaces that are not fully dispersed should be partially dispersed to the maximum extent practicable. See Section D6-03.4 for hydrologic modeling procedures to be used for determining Flow Control Credits for partial dispersion. Partial Flow Control Credit shall be given for sites that can implement partial dispersion per Section 7.2.3 in the LID Manual or per Section D6-03.4.

Design and size full infiltration per the DOE Manual, Volume III, Chapter 3, as modified herein per Section D4-06.7, Infiltration Systems.

Full infiltration credit towards flow control applies when 100% of the runoff is infiltrated per the DOE Manual Volume III Section 3.3.9.

Maintenance

Dispersion facilities shall be maintained per DOE Manual Volume IV, Chapter 2, BMPs for Maintenance of Stormwater Drainage and Treatment Systems.

Infiltration facilities shall be maintained per the Bellevue Maintenance Standards.

B. Smart Site Design

Description and Applicability

When considering site layout, use the principles of BMP T5.21, Better Site Design as described in the DOE Manual, Volume V, Section 5.3.2 to the maximum extent practicable in order to mitigate the development impact on stormwater quantity and quality. Practices include:

- Define Development Envelope and Protected Areas
- Minimize Directly Connected Impervious Areas
- Maximize Permeability
- Build Narrower Streets
- Maximize Choices for Mobility
- Use Drainage as a Design Element

- Comply with LUC 20.20.460, Impervious Surface Limits.

C. Preserve Native Vegetation

Apply BMP T5.20, Preserving Native Vegetation, as described in the DOE Manual, Volume V, Section 5.3.2 and comply with LUC 20.20.900, Significant Tree Retention.

Partial flow credit for retaining or planting trees can be achieved in accordance with the requirements in Section D6-03.4.

D. Amended Soil

Description and Applicability

For all disturbed pervious surfaces, amend soils to meet the specifications of BMP T5.13, Post-Construction Soil Quality and Depth, per the current "Guidelines and Resources for Implementing Soil Quality and Depth BMP T5.13" at www.SoilsforSalmon.org. See Standard Detail NDP-1.

Maintenance

Maintain amended soils per the Bellevue Maintenance Standards.

E. Roof Downspout Infiltration

Description, Applicability and Limitations

Roof downspout infiltration systems can consist of either an infiltration trench or infiltration drywell. They will be considered before other BMPs per Section D6-02, and used wherever site conditions allow, including required setbacks (per D4-07) and without causing flooding or erosion. If site conditions allow infiltration, direct roof runoff to one or more of the following: infiltration trench, infiltration drywell, Bioretention Cell, bioretention swale or planter, or pervious pavement. A vegetated roof or rain barrels or rain harvesting cistern may be used in addition, as long as the overflow is directed to one of the BMPs above.

Design and Sizing

Design and size infiltration trenches or drywells and apply Flow Control Credits per Volume III, Sections 3.1.1 and 3.3 of the DOE Manual and Standard Detail NDP-23. If an alternative NDP is selected, see the appropriate section for design criteria. Sections of the roof that drain to different downspouts may be treated with different Infiltration BMPs.

Maintenance

Maintain infiltration systems per the DOE Manual, Volume III, Section 3.3.11.

F. Roof Downspout Dispersion

Description, Applicability and Limitations

If the site and design criteria for Roof Downspout Infiltration cannot be met as described above, next evaluate the site for Roof Downspout Dispersion.

If the design criteria listed in the DOE Manual for splash blocks (Volume III, Section 3.1.2, Downspout Dispersion Systems) or sheet flow dispersion (Volume V, 5.3.1 Dispersion and Soil Quality BMPs, BMP T5.12) can be met, install one of the following at each downspout: splash block; pop-up emitter; rain barrel(s), rain harvesting cistern or vegetated roof with a

splash block at the overflow; or direct roof runoff to a bioretention facility, or pervious pavement. For surfaces that do not have concentrated flows, use Sheet Flow Dispersion per Section D6-03.1(G).

Dispersion trenches should only be considered as an option to manage roof runoff if site and design conditions are not met for any of the BMPs listed prior in Tables 6.2A or 6.2B, whether for a particular downspout or all roof runoff, and a storm stub is not available or is too high.

Design and Sizing

Design splash blocks per the DOE Manual, Volume III, Section 3.1.2 as modified by Section D6-04.6.

Design pop-up emitters per Standard Detail NDP-20 and Section D6-04.6. A maximum of 700 square feet of roof area may drain to each splash block or pop-up emitter. Vegetated flow paths requirements for splash blocks apply to pop-up emitter discharge areas, or runoff can be directed to a bioretention facility. A catch basin or yard drain at the base of the downspout upslope of the pop-up emitter is recommended.

Design dispersion trenches per Standard Detail NDP-22 and size and apply flow credits per Volume III, Section 3.1.2 of the DOE Manual.

Maintenance

To maintain splash blocks and pop-up emitters, inspect for appropriate placement after a rain event, and if flooding or erosion occurred, regrade or place 2-4” washed rock or river rock at the discharge point if erosion is occurring. Inspect splash blocks and pop-up emitters annually for placement, erosion and flooding, and clear debris from downspouts and gutters. Direct water downslope and away from structures.

Maintain dispersion trenches per Volume IV, Section 2.2 of the DOE Manual. Dispersion trenches shall be provided with access for ongoing maintenance at least three (3) feet in width.

G. Concentrated and Sheet Flow Dispersion

Description, Applicability and Limitations

For impervious surfaces that are not managed using the Roof Downspout techniques above, evaluate the site for the use of Concentrated Flow Dispersion (BMP T5.11) or Sheet Flow Dispersion (BMP T5.12). Evaluate all unmanaged impervious surfaces meeting the criteria in the DOE Manual, Volume V, Section 5.3.1, including sport courts, driveways, roofs without gutters, sloped areas cleared of vegetation, non-native landscaping, or roadways.

Design and Sizing

Design concentrated and sheet flow dispersion and apply flow credits per the DOE Manual, Volume V, Section 5.3.1. Alternatively, partial flow credits per Section D6-03.4 may be applied.

Maintenance

Provide necessary maintenance if erosion or flooding on-site or on downstream properties results.

Contributing impervious areas shall be kept free of oils, soap, and other substances considered Prohibited Discharges per BCC 24.06.125(B).

H. Perforated Stub-out Connection

Description, Applicability, Design and Sizing

If a connection to a storm pipe is being made, and the site meets the design criteria, install a Perforated Stub-out Connection per the DOE Manual, Volume III, Section 3.1.3 and Standard Detail NDP-25 The stub-out connection should be installed between the roof downspouts and the storm drain lot stub if roof downspout infiltration and dispersion are not feasible per above. It should also be installed for any residential or small lot drain or storm facility that has a piped connection to the storm drain lot stub.

Maintenance

Maintain per M2-07, Energy Dissipaters Requirements for Dispersion Trench, Bellevue Maintenance Standards.

Perforated stub-out connections shall be provided with access for ongoing maintenance at least three (3) feet in width.

D6-03.2 Natural Drainage Practices (NDPs)

This section provides a brief description and discussion of the applicability, limitations, design requirements, and sizing for the following NDPs:

- Bioretention – Bioretention Cells, bioretention planters, and bioretention swales
- Pervious Pavement
- Rain Recycling – cisterns and rain barrels
- Vegetated Roof

Other BMPs that DOE approves in writing as functionally equivalent to the NDPs listed here, or that attain DOE's General Use Level Designation (GULD) rating are also allowed, provided that they are installed per DOE's requirements.

Maintain NDPs in accordance with the Bellevue Maintenance Standards and/or per manufacturer's recommendation for BMPs approved by DOE.

A. Bioretention

1. Bioretention Cell and Bioretention Swale

Bioretention Cells are shallow landscaped depressions containing an amended soil mix and native plants that receive stormwater runoff (see Standard Details NDP-2, 6, 7, 8, 9, 10). Bioretention Cells can be designed to mimic natural conditions, where the soils and plants work together to store, treat, infiltrate, and slow runoff. Bioretention Cells are a landscape amenity that can be applied in various settings.

Bioretention swales are similar to Bioretention Cells, except that they are typically linear (e.g., narrower and longer than a Bioretention Cell, see Standard Detail NDP-3), and the bottom may be sloped. Bioretention swales can be designed with or without underdrains.

i. Applicability

- Residential, commercial, and mixed-use sites such as lawns that receive roof runoff, planter islands in parking lots, and along the sides of roads
- Well-suited to retrofit applications
- Can complement existing landscaping
- For sites with lower infiltration rates, underdrain systems can be installed to accommodate water that exceeds the infiltration capacity of the surrounding soil.

ii. Limitations

- Seasonal high groundwater must be more than 1 foot below the bottom of the Bioretention Cell. (Where the depth to groundwater is less than 3 feet below the bottom of the facility, the contributing impervious drainage area must be no greater than 5000 square feet.) Refer to Chapter D4 for methods to evaluate groundwater level.
- Critical Area restrictions may apply.
- Bioretention Cells and bioretention swales shall meet setback requirements per Chapter D4-07.
- Bioretention Cells must have relatively flat bottom slopes.
- Bioretention swales must have bottom slopes less than eight (8) percent. Check dams or weirs must be installed for slopes greater than two (2) percent.
- In some situations for bioretention swales, the engineer may specify liners or soil barriers to avoid excessive hydrologic loading to adjacent structures (such as basements, crawl spaces, utilities or steep slopes).

iii. Design Requirements

The following are design requirements and considerations for each component of a Bioretention Cell or bioretention swale. Bioretention swales shall be designed per the DOE Manual Volume V, Chapter 9 except where modified herein. The DOE Manual calls bioretention swale biofiltration swale. Some or all of the components may be used for a given application depending on the site characteristics and restrictions, pollutant loading, and design objectives.

Flow Inlet

- Maximum side slope shall be 25 percent (4:1) where sheet flow enters the facility.

- Absolute maximum side slope shall be 40 percent (2.5:1) for planted slopes. If steeper side slopes are necessary, modular block walls, concrete walls, or geotextile retaining wall systems may be used.
- Inflows from pipes must be protected from erosion using flow energy dissipation (e.g., rock pad, pop-up drainage emitter or flow dispersion weir).

Cell Ponding Area

- The ponding depth shall be a minimum of 2 inches for Single Family Residential lots and a minimum of 6 inches and maximum of 12 inches for non-Single Family Residential projects;
- The minimum bottom width shall be 1 foot.
- Maximum drawdown time for the ponded area shall be 48 hours when flow control is required.

Bioretention Soil

- Imported bioretention soil shall meet the requirements of Section D6-04.1 and shall have a minimum depth (uncompacted) of 12 inches for flow control, or a minimum depth of 18 inches for basic and enhanced water quality treatment or when MR5 only applies.
- If native soil meets the BSM aggregate specification in the Section D6-04.1, it may be amended with compost per the specification rather than importing bioretention soil mix materials.

Filter Criteria or Geotextile Fabric (Optional)

The designer must check for the difference in size of the bioretention soil mixture (BSM) and the reservoir course to prevent migration on the fine materials from the BSM into the reservoir course. The first check is to see if these two materials meet filter criteria as established in the design of seepage control measures in dams and embankments per filter criteria as given in the *Design of Small Dams* (Bureau of Reclamation, 1987) (See D1, References). The following criteria must exist to retain the protected material (BSM), allow the free movement of water over the protected material and provide sufficient discharge capacity otherwise the designer must provide a properly designed filter or a non-woven geotextile approved by the Utility:

D15 is less than or equal to 5 x D85 and D15 is greater than or equal to 5 x D15, where

D15 is the 15th percentile of the grain size distribution for the reservoir course

D15 is the 15th percentile of the grain size distribution for the BSM

D85 is the 85th percentile of the grain size distribution for the BSM

When specified by the designer the geotextile fabric shall be:

- Be in accordance with the NDP materials specifications in Section D6-04.2.
- Be placed between the reservoir course and bioretention soil mixture or subgrade.
- Wrap around and over reservoir course and secure.

- Pass water at a rate greater than the infiltration rate of the existing subgrade.

Underdrain (Optional)

For sites with lower infiltration rates, underdrain systems can be installed in the base of the facility to drain excess stormwater when the infiltration capacity of the surrounding soil is insufficient to meet minimum ponding drawdown time requirements. When specified by the project engineer, the design requirements shall include:

- Slotted, thick-walled plastic pipe or other underdrain materials as specified in Section D6-04.3 shall be used.
- The underdrain shall be placed in the retention zone at least 6 inches above the bottom, and with at least 1 foot of retention zone material above the top of the pipe (i.e., minimum retention zone depth of 24 inches for a 6-inch-diameter pipe and 26 inches for an 8-inch-diameter pipe).
- Retention zone aggregate shall meet specifications in Section D6-04.1 and placed to a minimum uncompacted depth of 12 inches without an underdrain, or 24 inches with an underdrain.

Liner or Soil Barrier for Hydraulic Restriction (Optional)

Adjacent roads, foundations, slopes, utilities, or other infrastructure may require that infiltration pathways are restricted to prevent excessive hydrologic loading. Where clay or geomembrane liners are used for this purpose, underdrain systems are required. Two types of restricting layers can be incorporated into bioretention designs: clay liners or geomembrane liners.

- Clay (bentonite) liners are low permeability soil barriers. When specified by the project engineer, design requirements shall include:
- Liner thickness shall be 12 inches minimum.
- Clay shall be compacted to 95% minimum dry density, modified proctor method (ASTM D 1557).
- A different depth and density sufficient to retard the infiltration rate to 2.4 x 10 5 inches per minute (1 x 10 6 cm/s) may also be used instead of the above criteria.
- The slope of clay liners must be restricted to 3H: IV for all areas requiring soil cover; otherwise, the soil layer must be stabilized by another method so that soil slippage into the facility does not occur. Any alternative soil stabilization method must take maintenance access into consideration.
- Where clay liners form the sides of ponds, the interior side slope should not be steeper than 3: 1, irrespective of fencing. This restriction is to ensure that anyone falling into the pond may safely climb out.
- Geomembrane liners completely block flow and are used for groundwater protection when bioretention facilities are used for filtering storm flows from pollutant hotspots. When specified by the project engineer, design requirements shall include:

- Geomembrane liners shall be ultraviolet (UV) light resistant and have a minimum thickness of 30 mils. A thickness of 40 mils shall be used in areas of maintenance access or where heavy machinery must be operated over the membrane.
- Geomembranes shall be bedded according to the manufacturer's recommendations.
- Liners shall be installed so that they can be covered with 12 inches of top dressing forming the bottom and sides of the water quality facility, except for liner sand filters. Top dressing shall consist of 6 inches of crushed rock covered with 6 inches of native soil. The rock layer is to mark the location of the liner for future maintenance operations. As an alternative to crushed rock, 12 inches of native soil may be used if orange plastic "safety fencing" or another highly visible, continuous marker is embedded 6 inches above the membrane.
- If possible, liners should be of a contrasting color so that maintenance workers are aware of any areas where a liner may have become exposed when maintaining the facility.
- Geomembrane liners shall not be used on slopes steeper than 5H:1V to prevent the top dressing material from slipping. Textured liners may be used on slopes up to 3H:1V upon recommendation by a geotechnical engineer that the top dressing will be stable for all site conditions, including maintenance.

Plant Materials

Minimum requirements associated with the vegetation design include the following:

•Plans shall specify that vegetation coverage of selected plants will achieve 90 percent coverage within 2 years or additional plantings will be provided until this coverage requirement is met.

•For sites with 5,000 square feet or more new and replaced impervious surface, plant spacing and plant size shall be designed to achieve specified coverage by certified landscape architect

•Plants shall be sited according to sun, soil, wind and moisture requirements

•At a minimum, provisions must be made for supplemental irrigation during the first two growing seasons following installation.

Refer to the NDP materials Section D6-04.1.

Mulch Layer

Refer to the NDP materials Section D6-04.1.

Observation Port

An observation port in accordance with Standard Detail NDP-9 shall be installed in each Bioretention Cell or bioretention swale cell near the outlet for projects required

to meet runoff treatment (MR6) and/or flow control (MR7). The observation port access must be located outside of the ponded area. The use of an offset for access adjacent to the facility may be necessary.

Overflow

Overflow protection can be provided by vertical stand pipes that are connected to under-drain systems (NDP-8), by horizontal drainage pipes (NDP-7) or armored channels (NDP-6) installed at the designed maximum ponding elevations. Overflow conveyance structures are necessary for all bioretention structures to safely convey flows that exceed the capacity of the facility and to protect downstream natural resources and property to an approved discharge point(s).

Approved discharge points, in order of preference, include:
•Surface waters
•Public storm drain pipes

Conveyance to approved discharge points, in order of preference, include:
•Direct pipe connections
•Ditch and culvert system
•Gutter or street flow line
•Surface dispersal

Overflows may be to the approved discharge point(s), or through interflow to the surface, or to surface discharge, or in combination. Overflows may be piped, or daylighted through a storage reservoir or dispersion BMP, or through overtopping of the facility. Plans shall indicate all flow paths.

Designers are recommended to consider flooding and nuisance ponding risks associated with larger peak flows. During large storm events, capacity will be limited at the approved discharge point(s) and backwater calculations may be required.

If a facility is designed for full infiltration, a constructed overflow is not required. Plans should indicate surface flow paths in case of failure of the facility.

Native Soil / Subgrade

- Determine the native soil infiltration rate and correction factors to be applied (long-term design infiltration rate or design infiltration rate) in accordance with Section D6-02.2(C) and Section D4-06.7(D).
- The Clearing and Grading plans shall include measures to protect the native soil or subgrade from unnecessary compaction and clogging from sediment during construction.

iv. Sizing

Sizing Factors for Bioretention Cells are provided in Section D6-03.3. These Sizing Factors may be used to size rain gardens to meet on-site stormwater management (MR5) when runoff treatment (MR6) and/or flow control (MR7) are not required. Bioretention Cell Sizing Factors are also provided for runoff treatment and flow control, but those are intended for conceptual design only. The Developer is required to perform independent calculations to size Bioretention Cells and bioretention swales to meet runoff treatment and flow control requirements per Chapter D3 of these Standards. Sizing Factors for bioretention swales are not provided.

When using an approved continuous model to size Bioretention Cells or bioretention swales with the demonstrative approach, the assumptions listed in Table 6.6 shall be applied. Bioretention should be modeled as a layer of soil (with specified infiltration rate and porosity) with ponding, detention via a restricted underdrain (if applicable), infiltration to underlying soil and overflow. The tributary areas, cell bottom area, and ponding depth should be iteratively sized until runoff treatment and/or flow control requirements are met and the maximum surface pool drawdown time of 48 hours is satisfied. The surface pool drawdown time may be estimated as the ponding depth divided by the long-term design infiltration rate.

For cells with longitudinal slopes greater than two (2) percent, the model must account for the effects that slope has on reducing the amount of wetted area that is available for infiltration. This may be done by adjusting the "Bottom Length" and "Effective Total Depth" inputs to the model as shown in Table 6.6, based on the number of cells, maximum ponding depth in each cell, and longitudinal bottom slope of each cell. See Figure 6.2 for a schematic illustration and Table 6.6 for additional details.

The overflow shall be sized for 100-year, 24-hour conveyance.

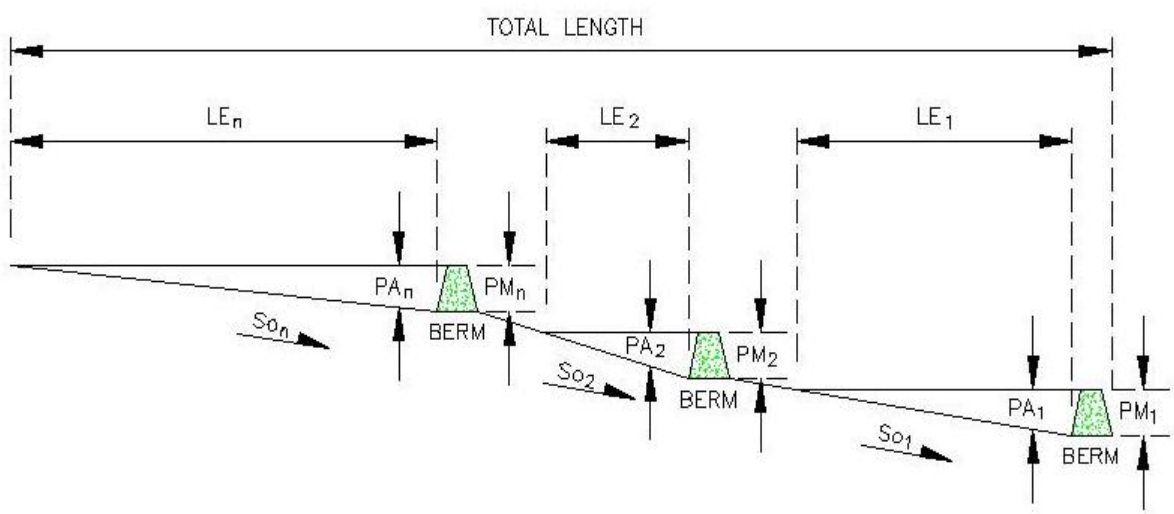

Figure 6.2. Schematic for calculating Bottom Length and Effective Total Depth for bioretention or pervious pavement on slopes where check dams (berms) are used. Refer to

Table 6.6 for Bioretention Cells and Bioretention Swales, and Table 6.8 for Pervious Pavement formulas.

Table 6.6. Continuous Modeling Assumptions for Bioretention Cells and Bioretention Swales.

Variable	Assumption
Precipitation Series	SeaTac 50-year, hourly time series, with appropriate scaling factor based on project location
Computational Time Step	Hourly
Inflows to Facility	Surface flow and interflow from drainage area routed to facility
Precipitation and Evaporation Applied to Facility	Yes
Bottom Length	For longitudinal slopes of 2 percent or less, use actual bottom length based on design plans. For longitudinal slope greater than 2 percent, use the total effective bottom length (LE_{Total}), calculated as: $LE_{Total} = LE_1 + LE_2 + LE_n$ $= PM_1/So_1 + PM_2/So_2 + PM_n/So_n$ Where: n = number of cells LE_n = Effective bottom Length of cell n (ft) PM_n = Maximum ponding depth of cell n (ft) So_n = Bottom Slope of Cell n (ft/ft) The effective bottom length input to the model may be no greater than the actual length based on design. Figure 6.2 provides a schematic illustration of how to estimate this model input based on designs.
Bottom Width	Actual bottom width based on design plans (minimum 1 foot).
Effective Total Depth	Effective Total Depth (ETD) is the distance (in feet) between the bottom of the bioretention soil layer and the top of over-road flooding: ETD = Bioretention Soil Depth + Maximum Ponding Depth + Freeboard + Maximum Depth of Over-Road Flooding For longitudinal slopes of 2 percent or less, use the Maximum Ponding Depth based on design plans. For longitudinal slopes greater than 2 percent, use the Average Maximum Ponding $Depth_{Total}$ (PA_{Total}), calculated as follows: $PA_{Total} = 1/n \times (PA_1 + PA_2 + PA_n)$ $= 1/2n \times (PM_1 + PM_2 + PM_n)$

Variable	Assumption
	Where: n = Number of cells PA_n = Average ponding depth of cell n (ft) PM_n = Maximum ponding depth of cell n (ft) Freeboard and Maximum Depth of Over-Road Flooding are based on designs. See discussion of the Bioretention Soil Depth input below. Figure 6.2 provides a schematic illustration of how to estimate this model input based on designs.
Bioretention Soil Infiltration Rate	For imported bioretention soil, see specification (Section D6-04.1. For compost amended native soil, rate shall be equal to the native soil design infiltration rate.
Bioretention Soil Porosity	For imported bioretention soil, porosity is 40 percent. For compost amended native soil, porosity is assumed to be 30 percent.
Bioretention Soil Depth	Minimum of 12 inches for flow control, or 18 inches for basic and enhanced water quality treatment.
Native Soil Design Infiltration Rate	Measured infiltration rate with correction factor applied, if applicable
Infiltration Across Wetted Surface Area	Yes if side slopes are 3H:1V or flatter. For steeper side slopes, only infiltration across the bottom area is modeled
Underdrain (optional)	Water stored in the bioretention soil below the underdrain may be allowed to infiltrate
Outlet Structure	Overflow elevation set at maximum ponding elevation (excluding freeboard). May be modeled as weir flow over riser edge or notch. Note that total facility depth (including freeboard) must be sufficient to allow water surface elevation to rise above the overflow elevation to provide sufficient head for discharge.

When flow control is required, either the default method or the demonstrative method can be used to calculate the amount of credit to be attributed to the Bioretention Cell or bioretention swale in sizing the downstream flow control facility, as described in Section D3-03. The default method typically results in less Flow Control Credit. The demonstrative method is described above in this section, and involves using the model developed for sizing purposes to also evaluate the amount of residual flow control needed. See Chapter D3 for guidance on hydrologic modeling for sizing flow control and runoff treatment facilities.

2. Bioretention Planter

A bioretention planter is similar to a Bioretention Cell or bioretention swale, except that it is typically designed with vertical, impervious walls and an impervious bottom to prevent infiltration or damage to nearby structures. Stormwater enters the surface

via a roof downspout pipe and percolates through the bioretention soil mix layer. The treated stormwater is discharged via an underdrain pipe to a storm drainage system, approved storage facility, or dispersal area. Design options are provided in this standard for bioretention planters with and without underdrains and with and without infiltration. The bioretention planter with infiltration is called an "infiltration planter" (see Standard Detail NDP-4A); the bioretention planter without infiltration is referred to as a "flow-through planter" (see Standard Details NDP-4 and 5). Multiple smaller planters are encouraged to manage relatively small drainage areas, rather than one large planter managing larger drainage areas.

i. Applicability

- Flow-through planters may receive roof runoff from residential, commercial, and mixed-use sites.
- Infiltration planters may receive roof runoff from residential, commercial, and mixed-use sites, as well as roadway, parking lot, or other paved surfaces provided that topography allows runoff to reach facility.
- Bioretention planters can be used where space is limited.

ii. Limitations

- For infiltration planters, seasonal high groundwater must be more than 1 foot below the bottom of the facility. (Where the depth to groundwater is less than 3 feet below the bottom of the facility, the contributing impervious drainage area must be no greater than 5000 square feet.)
- Infiltration planters shall meet infiltration BMP setback requirements per D4-07.
- Planters with underdrains will not satisfy MR5 or MR7, but can be designed to satisfy MR6. See Sizing Factors (Section D6-03.3).

iii. Design Requirements

<u>Inlet</u>

- Inflows from pipes should be directed to the top of the facility and protected from erosion using energy dissipation (e.g., rock pad, pop-up emitter, or flow dispersion weir).

<u>Dimensions</u>

- Ponding depth shall be a minimum of 4 inches and a maximum of 12 inches.
- Minimum bottom width shall be 18 inches for flow-through planters.
- Minimum bottom width shall be 30 inches for infiltration planters.
- Maximum drawdown time for the ponded area shall be 48 hours when flow control is required.

<u>Bioretention Soil Mix</u>

- Imported bioretention soil mix must meet the materials specifications in the NDP materials section (D6-04.1) and shall have a minimum depth of 18 inches.
- If native soil meets the aggregate specification in the NDP materials Section D6-04.1, it may be amended with compost per the specification therein rather than importing materials.

Underdrain

For flow-through planters or infiltration planters in locations with lower infiltration rates, underdrain systems can be installed in the base of the facility to drain excess stormwater when the infiltration capacity of the surrounding soil is insufficient to meet minimum ponding drawdown time requirements. When specified by the designer, design requirements shall include:

- Pipe material shall be a thick-walled plastic pipe or another material type listed in D6-04.3 or a type approved by the City.
- Pipe shall have a minimum diameter of three (3) inches and a maximum diameter of eight (8) inches.
- The underdrain shall be placed in the retention zone at least 6 inches above the bottom of the retention zone, and with at least 1 foot of retention zone material above the pipe (i.e., minimum uncompacted retention zone depth of 21 inches for a 3-inch-diameter pipe and 26 inches for an 8-inch-diameter pipe)..
- Retention zone aggregates shall meet requirements per D6-04.1 and shall have a minimum uncompacted depth of one (1) foot without an underdrain, or 21 inches with an underdrain.

Plant Materials

Refer to NDP materials Section D6-04.1 for recommended bioretention plants.

Mulch Layer

Refer to NDP materials Section D6-04.1 for mulch requirements.

Observation Port

An observation port (Standard Detail NDP-9) must be installed in each bioretention planter for projects required to meet runoff treatment and/or flow control, and may be combined with the overflow cleanout.

Overflow

Overflow protection can be provided by vertical stand pipes that are connected to under-drain systems (NDP-8), by horizontal drainage pipes (NDP- 7) or armored channels (NDP-6) installed at the designed maximum ponding elevations. Overflow conveyance structures are necessary for all bioretention structures to safely convey flows that exceed the capacity of the facility and to protect downstream natural resources and property to an approved discharge point(s).

Approved discharge points, in order of preference, include:
• Surface waters
• Public storm drain pipes

Conveyance to approved discharge points, in order of preference, include:
• Direct pipe connections
• Ditch and culvert system
• Gutter or street flow line
• Surface dispersal

Overflows may be to the approved discharge point(s), or through interflow to the surface, or to surface discharge, or in combination. Overflows may be piped, or daylighted through a storage reservoir or dispersion BMP, or through overtopping of the facility. Plans shall indicate all flow paths.

Designers are recommended to consider flooding and nuisance ponding risks associated with larger peak flows. During large storm events, capacity will be limited at the approved discharge point(s) and backwater calculations may be required.

If a facility is designed for full infiltration, a constructed overflow is not required. Plans should indicate surface flow paths in case of failure of the facility.

iv. Sizing

Sizing Factors for bioretention planters are provided in Section D6-03.3. These Sizing Factors may be used size bioretention planters to meet on-site stormwater management (MR5) when runoff treatment (MR6) and/or flow control (MR7) are not required. Sizing Factors are also provided for runoff treatment and flow control, but those are intended for conceptual design only. The Developer is required to perform independent calculations to size and design bioretention planters to meet runoff treatment and flow control requirements per Chapter D3 of these Standards. Note that only infiltration planters are capable of meeting flow control requirements.

When using an approved continuous model to size bioretention planters with the demonstrative approach, the assumptions listed in Table 6.7 shall be applied. The bioretention planter should be modeled as a layer of soil (with specified infiltration rate and porosity) with ponding, detention via a restricted underdrain (if applicable), infiltration to underlying soil (if applicable), and overflow. The tributary areas, planter bottom area, and ponding depth shall be iteratively sized until runoff treatment and flow control requirements are met and the maximum surface pool drawdown time of 48 hours is satisfied. The surface pool drawdown time may be estimated as the ponding depth divided by the long-term design infiltration rate. The overflow shall be sized for 100-year, 24-hour conveyance.

Table 6.7. Continuous Modeling Assumptions for Bioretention Planters.

Variable	Assumption
Precipitation Series	SeaTac 50-year, hourly time series, with appropriate scaling factor based on project location
Computational Time Step	Hourly
Inflows to Facility	Surface flow and interflow from drainage area routed to facility
Precipitation and Evaporation Applied to Facility	Yes
Bioretention Soil Infiltration Rate	For imported bioretention soil, see specification (Section D6-04.1). For compost amended native soil, rate shall be equal to the native soil design infiltration rate.
Bioretention Soil Porosity	For imported bioretention soil, porosity is 40 percent. For compost amended native soil, porosity is assumed to be 30 percent.
Bioretention Soil Depth	Minimum of 18 inches for flow control or water quality treatment
Aggregate Porosity	In-place aggregate porosity
Native Soil Design Infiltration Rate (optional)	Measured infiltration rate with correction factor applied, if applicable
Infiltration Across Wetted Surface Area	No, only infiltration across the bottom area is modeled
Underdrain (water quality treatment only)	All water which enters the facility must be routed through the underdrain in situations with no native infiltration. Water stored in the bioretention soil below the underdrain may be allowed to infiltrate in situations where native infiltration is acceptable.
Outlet Structure	Overflow elevation set at maximum ponding elevation (excluding freeboard). May be modeled as weir flow over riser edge or notch. Note that total facility depth (including freeboard) must be sufficient to allow water surface elevation to rise above the overflow elevation to provide sufficient head for discharge

When flow control is required, either the default method or the demonstrative method can be used to calculate the amount of Flow Control Credit to be attributed to the bioretention planter in order to reduce the size of the downstream flow control facility, as described in Section D3-03. The default method typically results in less credit. The demonstrative method is described above in this section, and involves using the model developed for sizing the bioretention planter to also evaluate the amount of residual flow control needed. See Chapter D3 for guidance on hydrologic modeling for sizing flow control and runoff treatment facilities.

B. Pervious Pavement

Pervious pavements facilities are alternatives to conventional pavements (asphalt or concrete) that allow water to pass through the wearing course into a rock reservoir level, where it can infiltrate naturally into the underlying soils (see Standard Detail NDP-11-

17). There are many allowed varieties of pervious pavements that fall into three primary categories:

- Asphalt
- Concrete
- Pavers

i. Applicability

- Pervious pavement can be used in areas such as parking lanes along residential streets, low-volume residential drives and access roads, driveways, sidewalks, bike lanes and other paths or trails, emergency and utility maintenance roads, and parking lots that are not High Vehicle Traffic Areas (see Section 3.3.7, Volume III, DOE Manual).
- When pervious pavement is managing its own footprint only (e.g., additional runoff not directed to it), it can be used in areas with design infiltration rates as low as 0.25 inches per hour.
- Grass or gravel pavers can be used in recreational or open spaces that are subject to occasional vehicle traffic (e.g., maintenance vehicles or in fire lanes).
- Slopes must be less than five (5) percent for pervious asphalt, six (6) percent for pervious concrete, and ten (10) percent for pervious paver systems. Interceptor infiltration trenches or check dams must be installed for slopes greater than two (2) percent (See Standard Detail NDP-15).

ii. Limitations

- Requires special construction practices to reduce compaction and siltation of the underlying soils.
- If the pervious pavement system will be installed in an area subject to vehicle traffic, the underlying soils must be analyzed by a qualified engineer for load bearing capacity. For some applications, such as, a sidewalk or patio, the pervious pavement system may be designed by a property owner.
- Pervious pavement materials shall be designed by a qualified engineer to provide the required structural support for the intended uses. Certain manufacturers may have pre-engineered systems that do not require additional engineering.
- Pervious concrete shall only be installed by a Certified Pervious Concrete Installer (See National Ready Mix Concrete Association certification program http://www.nrmca.org/certifications/pervious).
- Additional treatment liners functionally equivalent to those in Chapter 4 of Volume V of the DOE Manual may be necessary when used for treatment in highly permeable soils with short-term infiltration rates of greater than 2.4 inches per hour to reduce the potential for groundwater contamination. These treatment liners (layers) would also be needed to satisfy MR6 when underdrains are used.

- Pervious pavement in the right-of-way requires approval. The structural capacity of pavement sections when subject to vehicular loads depends on several factors and must be designed by a licensed professional engineer.
- Susceptible to clogging if receiving runoff from off-site areas (especially where soils are exposed) and if not periodically maintained via vacuum sweeper and other recommended maintenance practices (Section D6-03.5).
- May not be used in High Vehicle Traffic Areas as defined in Section 3.3.7, Volume III of the DOE Manual.
- Must meet setback requirements per D4-07.

iii. Design Requirements

Inlet

Flow diversion and erosion control measures shall protect the pervious pavement area from sedimentation until all upstream catchment areas are thoroughly stabilized.

Pervious Wearing Course

- Materials shall meet those listed in the NDP materials section (D6-04.2).
- Positive surface drainage shall be provided to eliminate risk of ponding on pavement surface (minimum surface slope shall be 0.5 percent).
- Maximum surface slope shall not exceed five (5) percent for pervious asphalt, six (6) percent for pervious concrete, and ten (10) percent for pervious paver systems.
- For grass pavers, the grid shall be filled with sandy loam topsoil mix per Standard Detail NDP-12.
- For pervious driveways, slope surface to direct drainage away from structures or direct water away using a trench drain.

Leveling Course

- A leveling course shall be included when required by the designer or in accordance with the manufacturer's recommendations for proprietary products.

Reservoir Course

- Reservoir course aggregate depth shall be a minimum of 6 inches (placed) for pervious pavement, or 4 inches for pervious paver systems beneath the pervious wearing course (and leveling course when used) for water storage, or a minimum of 22 inches (compacted) if an underdrain is used.
- Materials shall meet the specifications of Section D6-04.2 except for proprietary products shall follow the manufacturer's recommendations. Thoroughly washed aggregate is recommended to limit the amount of fines in the delivered stone.
- The reservoir course shall have a minimum total void volume of 20 percent after being compacted in place.
- When the slope exceeds 2 percent, design shall include an interceptor infiltration trench or check dams to create subsurface ponding per Standard Detail NDP-15.

- The maximum ponding elevation shall be 6 inches below the top of the wearing course to prevent degradation from repeated freeze-thaw.
- Slope bottom of reservoir course away from structures.

Native Soil / Subgrade

- The correction factor used to calculate the design infiltration rate shall consider compaction of the native soil or subgrade during construction.
- Determine the native soil infiltration rate and correction factors (long-term design infiltration rate) in accordance with Sections D6-02.2 C and D4-06.7(D).
- Clearing and Grading plans shall include instructions to protect the native soil or subgrade from unnecessary compaction and clogging from sediment during construction.

Underdrain (Optional)

An underdrain system shall be installed in the base of the facility if necessary to accommodate water that exceeds the infiltration capacity of the underlying native soil. When included, minimum design requirements shall include:

- Underdrain shall consist of slotted, thick-walled plastic pipe or other approved underdrain pipe per the NDP materials Section D6-04.3.
- Pipe shall have a minimum diameter of 4 inches and a maximum diameter of 8 inches.
- Underdrain shall be placed in the Reservoir Course at least 6 inches above the bottom, and with at least 1 foot of Reservoir Course material above the top of the pipe (i.e., minimum Reservoir Course depth of 22 inches for a 4-inch-diameter pipe and 26 inches for an 8-inch-diameter pipe).

Geotextile (Optional)

A non-woven geotextile can be installed if necessary to prevent the migration of fines from the native soil into the reservoir course. When specified by the designer, geotextile fabric shall:

- Be in accordance with the NDP materials specifications in Section D6-04.2.
- Be placed between the reservoir course and runoff treatment layer or subgrade.
- Wrap around and over reservoir course and secure.
- Pass water at a rate greater than the infiltration rate of the existing subgrade.

Runoff Treatment Layer (Optional)

When permeable pavement is designed to provide water quality treatment, the native underlying soils must meet the *Soil Physical and Chemical Suitability for Treatment* requirements in Section 3.3.7 of Volume III of the DOE Manual. When the native soils cannot meet those requirements, a “treatment liner” shall be installed that is functionally equivalent to Section 4.4.2 of Volume V of the DOE Manual.

Observation Port

An observation port in accordance with Standard Details NDP-16 and NDP-17 shall be installed in the furthest downslope area for every 10,000 square feet of pervious pavement area for projects required to meet MR6 and/or 7.

Maintenance

Provide minimum 8 (eight) feet minimum width access for ongoing maintenance.

iv. Sizing

If the pervious pavement area will not receive runoff from another impervious or pervious area, it should be built according to the design criteria above to meet the minimum requirements for on-site stormwater management (MR5). Sizing Factors for pervious pavement are provided in Section D6-03.3. These Sizing Factors may be used to size pervious pavement to meet MR5 when runoff treatment and/or flow control are not also required, and when pervious pavement area will receive stormwater runoff from a different pervious or impervious area, such as a roof. Sizing Factors are also provided for runoff treatment and flow control, but those are intended for conceptual design only. The Developer is required to perform independent calculations for sizing and designing pervious pavement to meet runoff treatment and flow control requirements per Chapter D3 of these Standards.

When an approved continuous model is used to size pervious pavement with the demonstrative approach, the assumptions listed in Table 6.8 shall be applied. Pervious pavement should be modeled as an impervious area with runoff routed to a gravel-filled infiltration trench (of the same surface area). The tributary areas (including off-site tributary areas, if any), pavement area, and average water surface depth in the aggregate should be iteratively sized until runoff treatment and/or flow control requirements are met. For pervious pavement facilities with longitudinal slopes greater than two (2) percent, the model must account for the effects that slope has on reducing the amount of wetted area that is available for infiltration. This may be done by adjusting the “Gravel Trench Bottom Length” and “Effective Total Depth” inputs to the model as shown in Table 6.8, based on the number of interceptor infiltration trenches or check dams, maximum ponding depth in each cell, and longitudinal bottom slope of each cell. See Figure 6.2 for a schematic illustration and Table 6.8 for more detailed guidance.

Table 6.8. Continuous Modeling Assumptions for Pervious Pavement.

Variable	Assumption
Precipitation Series	SeaTac 50-year, hourly time series, with appropriate scaling factor based on project location
Computational Time Step	Hourly
Inflows to Facility	Model pavement area as impervious basin routed to a gravel-filled trench with infiltration to underlying soil
Precipitation Applied to Facility	No. Precipitation is applied to the contributing basin before being routing to the trench
Evaporation Applied to Facility	Yes. While evaporation is applied to the impervious basin before routing to the trench, additional evaporation occurs when water is stored in the storage reservoir
Gravel Trench Bottom Length	For longitudinal slopes up to 2 percent, use actual bottom length based on design plans. For longitudinal slopes greater than 2 percent, use the total effective bottom length (LE_{Total}), calculated as: $LE_{Total} = LE_1 + LE_2 + \ldots + LE_n$ $= PM_1/So_1 + PM_2/So_2 + \ldots + PM_n/So_n$ Where: n = Number of Cells LE_n = Effective Bottom Length of Cell n (ft) PM_n = Maximum Ponding Depth of Cell n (ft) So_n = Bottom Slope of Cell n (ft/ft) The effective bottom length input to the model may be no greater than the actual length based on design. Figure 6.2 provides a schematic illustration of how to estimate this model input based on designs.
Gravel Trench Bottom Width	Actual bottom width based on design plans.
Effective Total Depth	Effective Total Depth (ETD) is the Maximum Ponding Depth plus one foot of freeboard above the top of the riser: For longitudinal slopes less than 2 percent, evaluate the Maximum Ponding Depth based on design plans. For longitudinal slopes greater than 2 percent, use the Average Maximum Ponding $Depth_{Total}$ (PA_{Total}), calculated as follows: $PA_{Total} = 1/n \times (PA_1 + PA_2 + \ldots + PA_n)$ $= 1/2n \times (PM_1 + PM_2 + \ldots + PM_n)$ Where: n = Number of Cells

Variable	Assumption
	PA_n = Average Ponding Depth of Cell n (ft) PM_n = Maximum Ponding Depth of Cell n (ft) Figure 6.2 provides a schematic illustration of how to estimate this model input based on designs.
Reservoir Course Depth	Average maximum subsurface water ponding depth in the storage reservoir (averaged across the facility) before berm overtopping or overflow occurs.
Reservoir Course Porosity	Assume maximum 20 percent unless test is provided showing higher porosity for aggregate compacted and in place
Native Soil Design Infiltration Rate	Measured infiltration rate with correction factor applied, if applicable
Infiltration Across Wetted Surface Area	No. Only infiltration across the bottom area is modeled
Underdrain (optional)	If underdrain is placed at bottom extent of the reservoir course, all water which enters the facility must be routed through the underdrain (e.g., no infiltration). If there is no liner or impermeable layer and the underdrain is elevated within the storage reservoir, water stored in the reservoir below the underdrain is allowed to infiltrate.
Outlet Structure	Overflow elevation set at average maximum subsurface ponding depth. May be modeled as weir flow over riser edge or notch. Note that freeboard must be sufficient to allow water surface elevation to rise above the overflow elevation to provide sufficient head for discharge.

When downstream flow control is required, either the default method or the demonstrative method can be used to calculate the amount of credit to be attributed to the pervious pavement in order to reduce the size of the downstream flow control facility, as described in Section D3-03. The default method typically results in less credit. The demonstrative method is described above in this section, and involves using the model developed for sizing the pervious pavement to also evaluate the amount of residual flow control needed. See Chapter D3 for guidance on hydrologic modeling for sizing flow control and runoff treatment facilities.

C. Rain Recycling

Rain recycling consists of capturing roof runoff and storing it for either later use or slow release to the surrounding landscaping (see Standard Details NDP-18 and 19). The primary components of a rain recycling system are the collection system (downspouts), a storage tank (rain barrel or cistern), and a dispersion system (pipes, hoses, or trenches), as in Standard Details NDP-18, NDP-19 and NDP-20.

Rainwater harvest for reuse can be accomplished with either rain barrels or cisterns. Cisterns are larger than rain barrels and can hold a greater volume of rainwater, or several rain barrels can be linked together to achieve the desired storage volume for rainwater

reuse on-site. Cisterns with detention can be used for on-site stormwater management (MR5) or flow control (MR7) in addition to rainwater harvest and reuse.

i. Applicability

- Storage for irrigating landscaped areas near buildings, carports, sheds, or other structures
- Optimum reduction in runoff achieved when the overflow is directed to a rain garden, bioretention swale, or other on-site stormwater management BMP
- Indoor use of recycled water is allowed per the Uniform Plumbing Code, as described in the Seattle King County Department of Public Health's "Rainwater Harvesting and Connection to Plumbing Fixtures" (January 30, 2007 or current), and requires a plumbing permit.
- Can be used in residential or non-residential applications.

ii. Limitations

- The watered landscaped area should ideally be at least one half the area of the roof being collected
- Storage tanks must drain within 72 hours after a storm event, unless sealed against entry by mosquitoes (openings must be smaller than 1/16-inch)

iii. Design Requirements

Catchment Area / Collection System

A roof catchment area collection system includes the gutters, downspouts, piping, and any other conveyance needed to route water to the rain barrel(s) or cistern. The roof catchment area must be clearly delineated on the Plans.

Leaf/Rock Screen

A filter screen or other debris barrier is required to prevent insects, leaves, and other larger debris from entering the system. A self-cleaning inlet filter is recommended.

Cistern / Rain Barrel

- All cisterns or rain barrels must be installed in accordance with manufacturer's installation instructions and the building code.
- Screen all opening locations adequately to prevent mosquitoes and other life forms from entering the system.
- Latch or lock covers to prevent wildlife and unauthorized human access into storage tanks.
- Opaque containers must be used for aboveground cisterns and rain barrels to minimize algae growth.
- Underground cisterns must be designed by an engineer.

- If an electric water pump is installed, an electrical permit is required, and a reduced pressure principle backflow assembly is required on the customer side of the water meter.
- The overflow conveyance capacity must be no less than the capacity of the inflow pipe or downspout.
- Connections to potable water systems or appliances require a reduced pressure backflow assembly and must comply with the Uniform Plumbing Code.

Low Flow Orifice for Cisterns with Detention

- The minimum diameter shall be 0.25 inches for orifices located above ground. This is the only exception to the minimum orifice size in Section D4-06.4(C), and these systems shall have screens to prevent debris from clogging the orifice. The minimum diameter shall be 0.5 inches for orifices located below ground.
- The low flow orifice invert must be at least 3 inches above the bottom of the cistern to prevent entraining sediment.

Overflow

Overflows shall be designed to convey excess flow to an additional tank, on-site stormwater management BMP, or discharge appropriately away from any structures, on-site sewage systems, wells, or steep slopes, and shall not cause erosion or flooding on-site or on downstream properties.

iv. Sizing

To receive Flow Control Credit for rain recycling with rain barrels or cisterns, runoff reduction must be demonstrated by a water balance model indicating the amount of rooftop runoff, the amount of harvested water that will be used, and the amount of overflows from the rain recycling system. A spreadsheet-based modeling tool may be used for this purpose.

The minimum time step to be used in the water balance model shall be one (1) day so that the timing, magnitude, and duration of overflows are considered in sizing residual detention to meet flow control requirements for the site, when needed, or to size overflow conveyance systems to properly route flows away from structures. The assumptions to be used in the water balance model are summarized in Table 6.9.

Table 6.9. Spreadsheet-Based Modeling Assumptions for Rain Barrels or Cisterns with Water Reuse.

Variable	Assumption
Precipitation Series	Obtain at least the last 10 years of historical rainfall data from SeaTac or other approved station. A daily (or finer) time step must be used
Computational Time Step	Daily (or finer)
Inflows to Facility	Daily (or finer) rainfall volume assumed to equal daily (or finer) inflow to the facility. This neglects abstraction or evaporation that may occur on the roof surface.
Storage	Available storage volume in rain barrel or cistern tanks below the overflow invert elevation
Water Reuse	Daily (or finer) cumulative outflows corresponding with irrigation, outdoor cleaning, indoor plumbing, or any other water use demands
Overflow	To be solved for in the model on a daily (or finer) time step

Rain Barrel

Flow Control Credits for rain barrels are provided in Section D6-03.4.

Cisterns with Detention

Sizing Factors for cisterns are provided in Section D6-03.4 for meeting on-site stormwater management (MR5) and flow control (MR7) requirements. Sizing factors for flow control are intended for conceptual design only. The Developer is required to show independent calculations used to size and design cisterns to meet flow control requirements.

For the demonstrative approach, continuous modeling shall be used to size the cisterns. The assumptions listed in Table 6.10 shall be used. The cisterns are modeled as a flat-bottomed detention vault or tank with an outlet structure that includes a low flow orifice. Tributary areas, detention bottom area, overflow depth, and orifice configuration should be iteratively sized until flow control is met or the desired reduction in downstream conveyance and flow control facilities is achieved.

Table 6.10. Continuous Modeling Assumptions for Cisterns with Detention.

Variable	Assumption
Precipitation Series	SeaTac 50-year, hourly time series, with appropriate scaling factor based on project location
Computational Time Step	Hourly
Inflows to Facility	Surface flow and interflow from drainage area should be connected to facility
Precipitation and Evaporation Applied to Facility	No
Infiltration	No
Total Depth	The total depth is the cistern height (including freeboard) above the cistern bottom
Outlet Structure	Low flow orifice, riser height and diameter
Overflow	The top of the overflow orifice should be set a minimum of 6 inches below the top of the cistern
Low Flow Orifice	Invert of low flow orifice should be set at a minimum of 3 inches above the bottom of the cistern

D. Vegetated Roof

Vegetative roofs are gently sloped roofs covered with soil and planted with vegetation in place of conventional roofing material. These roofs may be either intensive designs with soils 6 inches or deeper, multiple uses, and more garden plant varieties or extensive designs with shallow, lightweight soils less than 6 inches in depth and more drought-tolerant groundcover plants. Green roofs can be either "single-course," consisting of a single media designed to be freely draining and support plant growth, or "multi-course," which includes both a growth media layer and a separate, underlying drainage layer. Commercially available modular systems consisting of prefabricated trays filled with growing media are considered multi-course systems.

i. Applicability

- Effective stormwater management strategy in high-density urban areas and/or zero lot line situations.
- Energy-conservation-conscious developments.
- Retrofitting existing roofs with excess structural capacity.

ii. Limitations

- The Developer shall demonstrate that all design components have been addressed by experienced and qualified professionals, including loading, structural, waterproofing, fire resistance, and horticultural considerations.
- Requires careful construction practices by an experienced vegetated roof contractor.

- May require irrigation and routine maintenance.
- May require additional insurance.
- Maximum roof slope of 20 percent.

iii. Design Requirements

Waterproof Membrane

A waterproof membrane is required for all vegetated roof designs.

Root Barrier

- A root barrier shall be included in the vegetated roof design
- When waterproofing membrane is also to provide a root barrier function, provide supporting manufacturer documentation with submittal
- Root barrier shall not contain leachable water quality contaminants (e.g., herbicides, copper, and zinc)

Drainage Layer

- Intensive and extensive vegetated roofs shall include a drainage layer
- The aggregate for the drainage layer shall meet the following minimum requirements:
  - Minimum total pore volume of 25 percent by volume (per ASTM E2399)
  - Minimum saturated hydraulic conductivity of 425 inches per hour (per ASTM E2396-05)
  - Maximum total organic matter of one (1) percent by mass (per loss-on-ignition test)

Separation Fabric

- On all intensive and extensive vegetated roofs, separation fabric shall be installed to separate the growth media from the drainage layer, roof edges, penetrations, structures, and all surrounding areas.
- Separation fabric shall be a non-woven geotextile.
- Fabric shall have an average opening size sufficient to retain media.
- Fabric shall have permissivity sufficient to pass the anticipated peak rainfall intensity.

Growth Medium (Soil)

- The growth medium shall be a minimum of four (4) inches deep, and have the following characteristics:
  - Minimum total pore volume shall be 45 percent by volume for multi-course systems and 30 percent by volume for single-course systems (per ASTM E2399).

  - Water capacity shall be no less than 25 percent for single-course systems, 35 percent for extensive (shallow) multi-course systems, and 45 percent for intensive (deep) multi-course systems (per ASTM E2399).
  - Saturated hydraulic conductivity (permeability) shall be between 14 and 1,200 inches per hour for single-course systems and 2.8 and 28 inches per hour for multi-course systems (per ASTM E2396-05).
  - Minimum air content at maximum water capacity shall be 5 percent by volume (per ASTM E2396-05).
  - Maximum total organic matter shall be four (4) percent by mass for single-course systems, six (6) percent by mass for extensive (shallow) multi-course systems, and eight (8) percent by mass for intensive (deep) multi-course systems (per loss-on-ignition test).

- Growth media depth and characteristics must support growth for the plant species selected and shall be approved by a certified landscape architect.
- Vegetated roofs must not be subject to any use that will significantly compact the growth medium.
- Vegetated roof areas that are accessible to the public shall be protected (e.g., signs, railing, and fencing), and areas designed for foot traffic shall meet Building Code requirements.
- Mulch, mat, or other measures to control erosion of growth media shall be maintained until 90 percent vegetation foliage coverage is attained.
- To increase flow control, consider designing the growth media with water holding capacity on the high end of the specified range and a saturated hydraulic conductivity on the low end of the specified range.

Vegetation

- Vegetation foliage of the selected plants shall attain 90 percent coverage of the vegetated roof surface area within 2 years or additional plantings shall be provided until this coverage requirement is met.
- Plant spacing and plant size shall be designed to achieve specified coverage by a certified landscape architect.
- Vegetation shall be suited to harsh (e.g., hot, cold, wet and windy) rooftop conditions (see plant list in NDP Materials, Section D6-04.8).
- Plants shall not require fertilizer, pesticides or herbicides after the 2-year establishment period has ended.
- The Developer shall develop and implement a Landscape Management Plan to be submitted as part of the Operations and Maintenance Manual per Chapter D2.

Irrigation Plan

Minimum design requirements are as follows:

- Provisions shall be made for irrigation during the first two growing seasons following installation.
- Sufficient irrigation shall be provided to achieve and maintain 90 percent plant coverage after 2 years following installation.
- Irrigation design shall be included in the Landscape Management Plan.

Drain System

Vegetated roofs shall include a drain system capable of safely collecting and conveying water to an approved discharge point.

Structural Roof Support

Structural considerations for vegetated roofs shall include roof slope, design loads (including loads due to ponding), slipping and shear considerations, wind load, snow load, seismic load, and fire resistance. All vegetated roof structural designs must be prepared or stamped by a structural engineer.

iv. Sizing

Flow Control Credits for vegetated roofs are provided in Section D6-03.4. These Flow Control Credits may be used for small sites with 10,000 square feet of contributing impervious or less. When using continuous modeling to size vegetated roofs with a demonstrative approach, the assumptions listed in Table 6.11 shall be applied. Vegetated roofs should be modeled as layers of aggregate with surface flows, interflow, and exfiltrating flow routed to an outlet.

Table 6.11. Continuous Modeling Assumptions for Vegetated Roofs.

Variable	Assumption
Precipitation Series	SeaTac 50-year, hourly time series, with appropriate scaling factor based on project location
Computational Time Step	Hourly
Inflows to Facility	None
Precipitation and Evaporation Applied to Facility	Yes
Depth of Material (inches)	Growth medium/soil depth (minimum of 4 inches). Depth of underlying aggregate drainage layer, if any, is neglected.
Vegetative Cover	Ground cover or shrubs. Shrubs are appropriate only when growth medium is at least 6 inches.
Length of Rooftop (ft)	The length of the surface flow path to the roof drain
Slope of Rooftop (ft/ft)	Flat slope should be set to a minimum slope of 0.001 V:1 H (1,000H:1V)
Discharge from Facility	Surface flow, interflow and exfiltrated flow (groundwater) routed to point of compliance

E. Reverse Slope Sidewalk

Reverse slope sidewalks are standard concrete or asphalt pavement sidewalks which are sloped to drain away from the road and onto adjacent vegetated areas (see Standard Details NDP-21 and TE-11).

i. Applicability

- Public transportation projects with frontage on parks, open space, or vegetated areas.
- Public or private walks with adjacent vegetated areas.

ii. Limitations

- Critical Area restrictions may apply.
- Public transportation projects must have sufficient right-of-way, easement, or adjacent city-owned property to accommodate the full required width of the vegetated area.
- Private projects may require agreement from the adjacent property owner to allow unconcentrated sheetflow runoff from the surface of the reverse slope sidewalk (only) to flow onto the vegetated area, if applicable.

iii. Design Requirements

- The maximum width of the reverse slope sidewalk shall be 6 feet.
- The cross slope of the reverse slope sidewalk shall be 2 percent.
- The maximum longitudinal slope of the reverse slope sidewalk shall be 10 percent.
- Runoff from the reverse slope sidewalk must sheetflow to an adjacent downslope vegetated surface that is at least 10 feet wide and not directly connected into the storm drainage system.
- Vegetated area must be native soil or meet guidelines in BMP T5.13 of the DOE Manual Volume 5, Section 5.3.1.
- Vegetated area shall have a maximum slope of 8 percent (perpendicular to the alignment of the reverse slope sidewalk, see Standard Detail NDP-21).
- The shoulder on the downslope side of the reverse slope sidewalk shall be no greater than 1 foot wide.
- Reverse slope sidewalks shall be designed in accordance with the above requirements and standard sidewalk design requirements (see Standard Detail TE-11).

iv. Sizing

When flow control is required, the assumptions listed in Table 6.12 can be used to calculate the amount of credit to be attributed to the reverse slope sidewalk in sizing the downstream flow control facility. See Chapter D3 for guidance on hydrologic modeling for sizing flow control and runoff treatment facilities.

Table 6.12. Continuous Modeling Assumptions for Reverse Slope Sidewalks.

Variable	Assumption
Precipitation Series	SeaTac 50-year, hourly time series, with appropriate scaling factor based on project location
Computational Time Step	Hourly
Land Use Input for Reverse Slope Sidewalk	Landscaped area on underlying soil with flat or moderate slope, based on site conditions

F. Minimal Excavation Foundation Systems

Minimal excavation foundation systems are defined as foundations that minimize disturbance to the natural soil profile within the footprint of the structure. This preserves most of the hydrologic properties of the native soil. Minimal excavation foundation systems are generally a combination of driven piles and a connection component at, or above, grade. The piles allow the foundation system to reach or engage deep load-bearing soils without having to dig out and disrupt upper soil layers, which infiltrate, store and filter stormwater flows. Pin foundations are an example of a minimal excavation foundation system.

i. Applicability

- Pier and perimeter wall configurations for residential or commercial structures up to three stories high.
- Elevated paths and foot-bridges in environmentally sensitive areas.
- Can be installed on Hydrologic Soil Group A/B (outwash) and C/D (till) soils provided that the material is penetrable and will support the intended type of piles.
- Wall configurations are typically used on sites with slopes up to 10 percent, and pier configurations are typically used on sites with slopes up to 30 percent.

v. Limitations

- Prior to design, the site soils must be reviewed and described by a licensed geotechnical engineer, unless exempt by the City's Plan Review Department.
- The structure shall be designed by a Washington State licensed architect or engineer specifying lateral load connections to the foundation system. Certain manufacturers may have pre-engineered systems that do not require additional engineering for smaller projects, such as decks, walkways, and exterior stairways.
- Design calculations, a lateral load analysis and foundation specifications shall be submitted by the Developer with the building permit application.

- During construction, heavy equipment cannot be used within or immediately surrounding the building. Terracing of the foundation may be accomplished by tracked, blading equipment not exceeding 650 psf.
- Construction must be in compliance with the selected product listing.

vi. Design Requirements

- On relatively flat sites (i.e. less than 5 percent slope), grading shall be limited to knocking down the highs and lows to provide a better working surface. The top organic duff layer shall not be removed from the site. Re-distribute the organic duff evenly over the site after grading activities are complete.
- On sloped sites (i.e. between 5 percent and 30 percent slope), the soils may be graded smooth (knocking down superficial highs and lows) at their existing slope to provide a better working surface to receive pier systems, pre-cast walls, or slope cut forms for pouring continuous walls.
- To minimize the soil disturbed on sloped sites with terraces, the width of each terrace must be limited to the width of the equipment blade.
- A free draining, compressible buffer material (pea gravel, corrugated vinyl or foam product) shall be placed on the surface soils to prepare the site for placement of pre-cast or site poured wall components. This buffer material separates the base of the grade beam from the surface of the soil to prevent compaction from expansion or frost heave, and in some cases is employed to allow the movement of the saturated flows under the beam or wall.
- Where possible, roof runoff must be infiltrated or dispersed upslope of the structure to take advantage of infiltration and subsurface storage areas that would otherwise be lost in construction and placement of conventional "dug-in" foundation systems. Passive gravity systems for dispersing roof runoff are preferred; however, active systems may be used if back-up power sources are incorporated and a consistent manageable maintenance program is ensured.
- See Section 6.5 of the LID Manual for additional design information.

vii. Sizing

- Where roof runoff is dispersed on the up gradient side of a structure in accordance with the design criteria in "Roof Downspout Dispersion" (Section D6-03.1(F)), model the tributary roof area as pasture on the native soil.
- Where terracing or "step forming" is used on a slope, the square footage of roof that can be modeled as pasture must be reduced to account for lost soils. In "step forming," the building area is terraced in cuts of limited depth. This results in a series of level plateaus on which to erect the form boards. The following equation can be used to reduce the roof area that can be modeled as pasture:

  $A1 – (dC X 0.5)/dP X A1 = A2$

  Where:

A1 = roof area draining to up gradient side of structure

dC = average depth of cut into the soil profile

dP = average permeable depth of soil over the dispersion area (the A horizon plus an additional few inches of the B horizon where roots permeate into ample pore space of soil).

A2 = roof area that can be modeled as pasture on the native soil

- If roof runoff is dispersed down gradient of the structure in accordance with the design criteria and guidelines in "Roof Downspout Dispersion" (Section D6-03.1(F)), and there is at least 50 feet of vegetated flow path through native material or lawn/landscape area that meets the guidelines in "Amended Soil" (Section D6-03.1(D)), model the tributary roof areas as landscaped area.
- Runoff dispersed up gradient of a garage slab, monolithic poured patio, or driveway may not be included as applicable infiltration areas for these systems.

D6-03.3 Sizing Factors for On-site Stormwater BMPs

Sizing Factors may be used to simplify the design and review of on-site BMPs sized to meet on-site stormwater management (MR5) when runoff treatment and/or flow control are not required. When used for this purpose, these Sizing Factors can be used by the Developer without an engineer. Sizing Factors are also presented for runoff treatment and flow control to provide general guidance for conceptual design only. The Sizing Factors are presented in Table 6.13 (Section D6-03.3 C).

A. Applicability

Sizing Factors may not be used to assign partial credit for on-site facilities towards flow control or runoff treatment requirements.

Generalized assumptions were used to develop the Sizing Factors that may result in conservative sizing for some sites. Developers have the option to use the Sizing Factors provided in this section, or to follow an engineered sizing approach (Section D6-03.2) and submit an alternative facility size with supporting engineering calculations for review.

The required BMP may be sized for on-site stormwater management only when flow control and treatment are not required using the Sizing Factors provided in Table 6.13. For most BMPs, Sizing Factors are used to calculate the BMP bottom surface area, as follows:

BMP Area = Contributing Impervious Area x Sizing Factor (%)/100

Cistern and infiltration trenches represent exceptions, for which the sizing factors are used to calculate the required infiltration trench length (in feet) or cistern volume (in gallons), respectively.

Example:

To size a rain garden without an underdrain to meet Minimum Requirement 5 with six (6) inches of ponding storage depth at a site with a native soil design infiltration rate of 0.25 inches per hour, use the Sizing Factor of 8.6 percent from Table 6.13. If this rain garden were being sized to manage 10,000 square feet of impervious surface area, the required bottom footprint area would be 860 square feet. The top footprint area would depend on the total depth and side slopes of the rain garden.

In order to use these Sizing Factors, the BMP must meet all of the specific design requirements (e.g., side slopes, freeboard, soil characteristics, gravel depth) in accordance with Section D6-03.1 or D6-03.2 and the respective Standard Detail.

Developers may linearly interpolate between the design depths evaluated. However, design infiltration rates for the native soils must be rounded down to the nearest rate in Table 6.13.

B. Implementation

The following describes how the Sizing Factors are to be used to size on-site stormwater management BMPs.

i. Roof Downspout Infiltration Trench

Sizing Factors for roof infiltration trenches receiving runoff from an impervious surface are provided in Table 6.13. Factors are organized by MR and native soil type. Infiltration trenches are sized by linear feet required for a given contributing area, rather than by bottom footprint area (in square feet) required. ***To use these Sizing Factors, the roof infiltration trench must meet the general requirements outlined in the DOE Manual Volume III, Section 3.3.11.***

ii. Rain Gardens

Sizing Factors for rain gardens (with and without underdrains) receiving runoff from an impervious surface are provided in Table 6.13. Factors are organized by MR, facility ponding depth, and native soil design infiltration rate. A 6- or 12-inch facility ponding depth may be selected. The design rate for the native soils must be rounded down to the nearest design infiltration rate in Table 6.13. ***To use these Sizing Factors, the rain garden must meet the design requirements for rain gardens outlined in Section D6-03.2 plus the following specific requirements:***

- Bottom area shall be sized using the applicable sizing factor
- Bottom area shall be no more than two (2) percent slope
- When an underdrain is used, the diameter shall be eight (8) inches and the gravel backfill depth shall be a minimum of 26 inches (porosity = 0.35)
- Side slopes within ponded area shall be no steeper than 2.5H:1V
- Bioretention soil mix shall have an infiltration rate of at least 2.5 inches per hour (porosity = 0.4)
- Bioretention soil mix depth shall be a minimum of 18 inches for on-site stormwater management and runoff treatment

- Minimum ponding depth shall be set at the designated height (6 inches or 12 inches). For intermediate ponding depths (between 6 and 12 inches), a Sizing Factor may be linearly interpolated.

iii. Bioretention Planters

Sizing Factors for bioretention planters receiving runoff from an impervious surface are provided in Table 6.13. Factors are organized by MR, facility ponding depth, and native soil design infiltration rate. A 6- or 12-inch facility ponding depth may be selected. For infiltration planters, the design rate for the native soils must be rounded down to the nearest design infiltration rate in Table 6.13. Planters with underdrains can only be used to meet requirements for basic or enhanced treatment (MR6). Infiltration planters can be used to meet MR5, 6, and 7. ***To use these Sizing Factors, the bioretention planter must meet the design requirements outlined in Section 6-03.2 plus the following specific requirements:***

- The bioretention planter area shall be sized using the applicable sizing factor
- Bottom area shall be flat (0 percent slope)
- The underdrain diameter shall be 8 inches
- Vertical side slopes
- Bioretention soil mix shall have an infiltration rate of at least 2.5 inches per hour (porosity = 0.4)
- Bioretention soil mix depth shall be a minimum of 18 inches for runoff treatment
- Gravel depth shall be a minimum of 26 inches (porosity = 0.35)
- Freeboard shall be 4 inches or greater
- Minimum ponding depth shall be set at the designated height (6 inches or 12 inches). For intermediate ponding depths (between 6 and 12 inches), a Sizing Factor may be linearly interpolated.

iv. Pervious Pavement

Sizing Factors for pervious pavement receiving runoff from an impervious surface are provided in Table 6.13. Factors are organized by MR and native soil design infiltration rate. The design rate for the native soils must be rounded down to the nearest design infiltration rate in Table 6.13. ***To use these Sizing Factors, the pervious pavement must meet the design requirements for pervious pavement outlined in Section 6-03.2 plus the following specific requirements:***

- The pervious pavement area shall be sized using the applicable sizing factor.
- The longitudinal bottom slope shall be 2 percent or less.
- The maximum subsurface water ponding depth in the reservoir course before overflow shall be at least 6 inches. See Standard Detail NDP-15 for design measures to provide subsurface ponding.
- The storage reservoir shall be composed of aggregate with a minimum void volume of 20 percent.

- No underdrain or impermeable liner shall be used.

v. Rain Recycling - Cistern

Sizing Factors for cisterns receiving runoff from an impervious surface are provided in Table 6.13. Factors are organized by MR. Cistern sizing factors are presented in two ways: 1) percentage values that represent the top cross-sectional area of the storage tank as a percentage of the contributing roof area; and 2) the equivalent volume represented in terms of gallons per square feet of contributing roof area. ***To use these Sizing Factors, the cisterns must meet the design requirements for outlined in Section 6-03.2 plus the following specific requirements:***

- The low flow orifice diameter shall be 0.25 inches.
- Screening to prevent leaves and debris from clogging the orifice shall be less than 0.1 inch mesh. The inlet pipe shall have a self-cleaning filter, and if possible, the top of the cistern shall also be screened.
- The low flow orifice must be able to drain continuously from October 1 through June 30.
- Invert of overflow shall be set at the designated height (3 or 4 feet) above invert of low flow orifice. For intermediate ponding depths (between 3 and 4 feet), a Sizing Factor may be linearly interpolated.
- The cistern shall have vertical walls to the designated overflow height.

C. Sizing Factors

Table 6.13 summarizes the Sizing Factors for on-site stormwater management (MR5), and provides sizing estimates for conceptual design for runoff treatment (MR6) and flow control (MR7). The Sizing Factors represent the required BMP size (generally the bottom footprint area) as a function of MR and design configuration (e.g., ponding depth (PD) and native soil design infiltration rate (inf)).

Table 6.13. Sizing Factors for On-site BMPs.

BMP	Design Variables	On-site Sizing Factor (MR5)	Runoff Treatment Sizing Factor (MR6)	Flow Control Sizing Factor (MR7)
Roof Downspout Infiltration Trench[a]	Coarse sands and cobbles, inf>10 in/hr	20 LF/1,000 sf	N/A	20 LF/1,000 sf
	Medium sand, inf>7.5-10 in/hr	30 LF/1,000 sf	N/A	30 LF/1,000 sf
	Fine sand, loamy sand, inf>2.4-7.5 in/hr	75 LF/1,000 sf	N/A	75 LF/1,000 sf
	Sandy loam, inf>1-2.4 in/hr	125 LF/1,000 sf	N/A	125 LF/1,000 sf
	Loam, inf=0.25-1 in/hr	190 LF/1,000 sf	N/A	190 LF/1,000 sf
Rain Garden or Bioretention Cells(no Underdrain)	PD=.5', inf=0.25 in/hr	8.6%	5.4%	21.6%
	PD=.5', inf=1 in/hr	4.0%	2.0%	10.1%
	PD=1', inf=0.25 in/hr	6.0%	3.8%	15.0%
	PD=1', inf=1 in/hr	2.9%	1.54%	7.4%
Rain Garden or Bioretention Cells with Underdrain	PD=.5', inf=0.25 in/hr	N/A	1.46%	Engineered Design
	PD=.5', inf=1 in/hr	5.51%	1.3%	13.84%
	PD=1', inf=0.25 in/hr	N/A	0.98%	Engineered Design
	PD=1', inf=1 in/hr	5.47%	0.79%	13.76%
Bioretention Planter with Underdrain	PD=.5'	N/A	2.5%	N/A
	PD=1'	N/A	2.0%	N/A
Bioretention Planter - Infiltration	PD=.5',inf=.25 in/hr	8.8%	2.5%	19.0%
	PD=.5',inf=1 in/hr	5.0%	2.5%	7.2%
Pervious Pavement	BC=.5', WC=.33 ft, inf=0.25 in/hr	33.3%	19.0%	55.4%
	BC=.5', WC=.33 ft, inf =1 in/hr	33.3%	7.2%	21.8%
Rain Recycling - Cistern[b]	Depth above orifice=3.0', low flow orifice diameter=0.25"	10.4% (2.34 gal/sf)	N/A	25.9% (5.86 gal/sf)
	Depth above orifice=4.0', low flow orifice diameter=0.25"	5.96% (1.78 gal/sf)	N/A	14.9% (4.46 gal/sf)

Notes:
N/A = not applicable
PD = ponding depth
BC = base course depth
WC = wearing course depth
inf = design infiltration rate (measured infiltration rate with appropriate correction factors applied)
gal = gallons
a – Roof infiltration trench Sizing Factors are provided as linear feet (LF) per 1,000 square foot (sf) of roof area.
b – Rain recycling – cistern Sizing Factors are also provided as gallons (gal) of storage per square foot of roof area.

D6-03.4 Flow Control Credits for On-site Stormwater Management BMPs

For on-site BMPs that are not capable of meeting flow control alone, Flow Control Credits can be used to calculate partial credit towards meeting flow control requirements to reduce the size

of downstream flow control facilities. Flow Control Credits are presented in Table 6.14 (Section D6-03.4 C).

Flow Control Credit may be achieved by implementing the following on-site BMPs:

- Retaining trees
- Planting new trees
- Installing rain barrels
- Downspout or sheet flow dispersion
- Installing a vegetated roof

The impervious area mitigated is calculated as the product of the Flow Control Credit and the quantity of the BMP.

Example:

Flow control facilities must be sized to meet on-site stormwater management (MR5) and flow control (MR7) requirements for a site with 15,000 sf of impervious area. The design plans include a 5,000 sf vegetated roof with a 4-inch-deep growing medium. The amount of impervious area mitigated is 43 percent of 5,000 sf, or 2,150 square feet. This reduces the total impervious surface area requiring mitigation from 15,000 square feet to 12,850 square feet. Additionally, ten (10) evergreen trees with canopy areas of approximately 100 square feet each are retained, so the additional impervious area mitigated is 200 square feet (20% x 100 sf x 10 evergreen trees retained). This further reduces the total impervious area requiring mitigation to 12,650 square feet. Only the unmitigated impervious area (12,650 square feet) is then included in the continuous hydrologic model to size the downstream flow control facilities (Section D3-02) for the project.

To use these Flow Control Credits, the facility must meet all specified design requirements in accordance with Sections D6-03.1 and D6-03.2 and the respective Standard Details.

A. Applicability

For BMPs that do not fully meet the flow control requirement, Flow Control Credits can be applied to reduce the size of flow control facilities. The Flow Control Credit values are based on the degree to which these facilities achieve the flow control standard per Chapter D3. These credits represent impervious area reductions applied to the amount of impervious surface area requiring flow control, or mitigation. Flow Control Credits are presented in Table 6.14 (Section D6-03.4 C).

Generalized assumptions were used to develop the Flow Control Credits that may underestimate actual flow control benefits for some sites. Developers have the option to use the Flow Control Credits provided in this section, or to follow the demonstrative approach (Section D6-03.2) and submit an alternative facility Flow Control Credit with supporting engineering calculations for review.

B. Implementation

The following describes how the Flow Control Credits are used to evaluate the amount of impervious area mitigated to meet the applicable Minimum Requirements for on-site BMPs that do not fully achieve flow control requirements.

i. Retained Trees

Retaining trees alone will not achieve flow control requirements; however, some flow control benefits are achieved with this BMP. Credits for retained trees are provided in Table 6.14 for deciduous and evergreen trees. This credit can be applied to reduce the effective impervious surface area used in downstream conveyance and flow control calculations. Since partial credit only is applied, additional flow control measures will be required. ***To use the Flow Control Credit, the retained trees must meet the following specific requirements:***

- Retained trees shall have a minimum six (6) inches diameter at a height of four (4) feet above the existing ground on the uphill side of a tree.
- The tree trunk center must be within 20 feet of new and/or replaced ground level impervious surface.
- Tree credits do not apply to trees in native vegetation areas used for flow dispersion or other Flow Control Credit.
- The total tree credit for retained trees shall not exceed 25 percent of impervious surface requiring mitigation.

ii. New Trees

Newly planted trees alone will not achieve flow control requirements; however, some flow control benefits are achieved with this BMP. Credits for new trees are provided in Table 6.14 for deciduous and evergreen trees. This credit can be applied to reduce the effective impervious surface area used in downstream conveyance and flow control calculations. Since only partial credit is applied, additional flow control measures will be required. ***To use the Flow Control Credit, the new trees must meet the following specific requirements:***

- The tree trunk center must be within 20 feet of new and/or replaced ground level impervious surface.
- Tree credits do not apply to trees in native vegetation areas used for flow dispersion or other Flow Control Credit.
- The total tree credit for newly planted trees shall not exceed 25 percent of impervious surface requiring mitigation.
- Minimum five (5) foot setback from structures.
- Minimum five (5) foot setback from underground utility lines.
- Minimum two (2) foot setback from edge of any paved surface.

- New deciduous trees shall be at least 1.5 inches in diameter measured six (6) inches above the ground. New evergreen trees shall be at least four (4) feet tall.

iii. Roof Downspout, Concentrated, or Sheet Flow Dispersion

Dispersion will not achieve flow control requirements unless it meets the requirements of Full Dispersion as outlined in Section D6-03.1; some flow control benefits are achieved with more limited dispersion BMPs. Credits for dispersion are provided in Table 6.14, or Flow Control Credits for roof downspout dispersion from Chapter 3, Volume III of the DOE Manual may be applied. This credit can be applied to reduce the effective impervious surface area used in drainage calculations. Since partial credit is applied, additional flow control measures will be required. ***To use the Flow Control Credit, roof downspout dispersion, concentrated flow dispersion or sheet flow dispersion must meet the general requirements outlined in Section D6-03.1.***

iv. Rain Recycling - Rain Barrels

Rain barrels alone will not achieve flow control requirements; however, some flow control benefits are achieved with this BMP. Credits for rain barrels are provided in Table 6.14. This credit can be applied to reduce the effective impervious surface area used in downstream conveyance and flow control calculations. Since partial credit only is applied, additional flow control measures will be required. ***To use the Flow Control Credit, the rain barrels must meet the general requirements for rain barrels outlined in Section 6-03.2. A minimum of four (4) rain barrels must be installed to receive Flow Control Credit.***

v. Vegetated Roof

Vegetated roofs alone will not achieve flow control requirements; however, some flow control benefits are achieved with this BMP. Credits for vegetated roofs are provided in Table 6.14, organized by growth medium depth. This credit can be applied to reduce the effective impervious surface area used in downstream conveyance and flow control calculations. Since partial credit only is applied, additional flow control measures will be required. ***To use the Flow Control Credit, the vegetated roof must meet the design requirements for vegetated roofs outlined in Section 6-03.2 plus the following specific requirements:***

- Roof slope shall have a pitch of up to 2-2/5":12" (2-2/5 inch fall per foot), 5H:1V, or 20 percent.

C. Flow Control Credits

Table 6.14 summarizes the default Flow Control Credits for several on-site stormwater management BMPs. The Flow Control Credits represent the percentage or square footage of impervious area mitigated by the BMP. This mitigated impervious area can be subtracted from the amount of impervious area input to the continuous hydrologic model used to size downstream flow control facilities as described in Section D3-03. Additional default Flow Control Credits for BMPs not included herein can be found in Chapter 7 of the LID Manual.

Table 6.14. Flow Control Credits.

BMP	Design Variables	Flow Control Credit
Retained Trees[a]	Evergreen	20% canopy area (minimum 100 sf)
	Deciduous	10% canopy area (minimum 50 sf)
New Trees[a]	Evergreen	50 sf/tree
	Deciduous	20 sf/tree
Roof Downspout, Concentrated or Sheet Flow Dispersion	Dispersion to compost amended lawn or landscape in accordance with D6-03.1.	90%
Rain Recycling - Rain Barrels[b]	(4) 50-60 gallon tanks	1% /4 rain barrels
Vegetated Roof	4-inch growing medium	43%
	8-inch growing medium	50%

Notes:
sf = square feet
a – Trees must be within 20 feet of ground-level impervious surface. The total tree credit shall not exceed 25 percent of impervious surface requiring mitigation.
b – Minimum of 4 rain barrels shall be installed to receive Flow Control Credit.

D6-03.5 Maintenance

Long-term maintenance is required for all runoff control and treatment facilities. See Section D2-09 for operation and maintenance manual (O & M Manual) requirements. General maintenance shall be performed per DOE Manual Volume IV, Chapter 2, page 2-40, BMPs for Maintenance of Stormwater Drainage and Treatment Systems. In addition:

A. For each required On-site Stormwater BMP, refer to Section D6-03.1 for general maintenance guidelines. All BMPs except splash blocks, sheet flow dispersion, and concentrated flow dispersion require a maintenance log be kept on-site per D2-09.

B. For Natural Drainage Practices (D6-03.2), use the performance standards and inspection and maintenance schedules and techniques provided by the designer or manufacturer. Comply with the maintenance guidelines in Bellevue Maintenance Standards, and copy applicable maintenance procedures into the O&M Manual for each facility.

D6-04 NDP MATERIALS

D6-04.1 Bioretention

A. Bioretention Soil Mix (BSM)

For use in Rain Gardens, Bioretention Swales and Downspout Planter Boxes. Functions as a Detention/Filter layer and growth medium for plants.

BSM shall be as follows:

- Placed to a minimum depth of 18 inches with the following characteristics:
- Initial infiltration rate ≤12 inches per hour;
- Cation exchange capacity (CEC) ≥ 5 meq/100 grams of dry soil;

- Minimum 8 percent to maximum 10 percent organic matter content (by dry weight); and
- 2-5 percent fines passing the No. 200 sieve;
- Contain less than 5% clay, by volume, and
- A uniform soil mixture, free of stones, stumps, roots, or debris larger than 2 inches.

When required by the Engineer, testing shall be done by a Contractor-provided testing laboratory. The laboratory must be accredited by STA, AASHTO, ASTM, or other industry-recognized standards organization, and have current and maintained certification. The testing laboratory shall be capable of performing all tests to the standards specified, and shall provide test results with an accompanying Manufacturer's Certificate of Compliance to the Engineer. Testing laboratories include but are not limited to those listed in Section 7 in "Building Soil: Guidelines and Resources for Implementing Soil Quality and Depth BMP T5.13 in WDOE Stormwater Management Manual for Western Washington." This document may be downloaded at www.soilsforsalmon.org or www.buildingsoil.org. It is the responsibility of the contractor to verify the laboratory's accreditations are up to date.

Submittal Requirements

At least ten (10) working days prior to placement of the BSM, the Contractor shall submit to the Engineer for approval:

1. Grain size analysis results of Mineral Aggregate performed in accordance with ASTM D 422, Standard Test Method for Particle Size Analysis of Soils;
2. Quality analysis results for compost performed in accordance with STA standards, as specified in the Standard Specifications, Section 9-14.4(8);
3. Organic content test results for the mixed BSM. Organic content test shall be performed in accordance with Testing Methods for the Examination of Compost and Composting (TMECC) 05.07A, "Loss-On-Ignition Organic Matter Method";
4. Modified Proctor compaction testing for the mixed BSM, performed in accordance with ASTM D 1557, Test Method for Laboratory Compaction Characteristics of Soil Using Modified Effort;
5. A list of the equipment and a description methods used to mix the Mineral Aggregate and compost to produce the BSM;
6. Permeability or hydraulic conductivity testing of the BSM, performed in accordance with ASTM D 2434, Standard Test Method for Permeability of Granular Soils. For the landscape BSM, assume a relative compaction of 85 percent of modified maximum dry density (ASTM D 1557); and
7. The following information about the testing laboratory(ies):
    1) Name of laboratory(ies) including contact person(s),
    2) Address(es),
    3) Phone contact(s),

4) E-mail address(es);
5) Qualifications of laboratory and personnel including expiration date of current certification.

Bioretention Construction Requirements

BSM shall be protected from all sources of additional moisture at the Supplier's site, covered during transport, at the Project Site, and until incorporated into the Work. Soil placement and compaction shall not occur when the ground is frozen or excessively wet (>3% above optimum moisture content), or when weather conditions are unsuitable as determined by the Engineer.

Bioretention Soil Placement

- The Contractor shall not place bioretention soil until the Project Site draining to the bioretention area has been stabilized and authorization is given by the Engineer.
- Mixing placing BSM shall not be allowed if the area receiving BSM is wet or saturated or has been subjected to more than ½-inch of precipitation within 48-hours prior to mixing or placement. The Engineer will have final authority to determine whether wet or saturated conditions exist.
- In rain gardens and in areas to be landscaped with vegetation other than turf, place BSM loosely. Final BSM depth shall be measured and verified only after the soil has been water compacted, which requires filling the cell with water, without creating any scour or erosion, to at least 1 inches of ponding. If water compaction is not an option, final BSM depth shall be measured at X inches above the grade specified on the plans to allow for settling after the first storm. X shall be calculated by depth of BSM multiplied by 0.15 and rounded up to the nearest whole number.
- In areas to be planted with turf, place BSM in loose lifts not exceeding 12 inches. Compact BSM for turf to a relative compaction of 85 percent of modified maximum dry density (ASTM D 1557), where slopes allow, as determined by the Engineer. Where turf BSM is placed in the 2-foot road shoulder, compact to a relative compaction of 90 percent of modified maximum dry density (ASTM D 1557). Final BSM depth shall be measured and verified only after final BSM compaction.

Type 1 – Amend Existing On-site Soils

If existing soils on-site are loam, sandy loam or loamy sand texture as defined by the USDA texture triangle, Figure 3.27 in Volume III, DOE Manual, and free of debris, the BSM can be composed of native soils excavated from the site mixed with compost to meet the above specifications. On-site soil mixing shall not be allowed if soil is saturated or has been subjected to water within 48 hours.

Projects required to meet MR1-9 – After mixing, send representative samples to a lab to verify that the BSM meets the specifications listed above. Present the manufacturer's certificate of compliance to the Engineer.

Projects required to meet MR1-5 only – Use the following table to mix appropriate quantities of on-site soils with approved compost (see compost specification under

Type 3, below). Use the USDA soil textural triangle to determine site soil texture. If the on-site soils are not one of the types below, use Type 2 or Type 3 BSM, below.

Table 6.15. Bioretention Soil Mix – Quantities using on-site (native) soils

On-site Soil Type (USDA Texture Triangle)	% Coarse Sand (by volume)	% On-site Soil (by volume)	% Compost (by volume)
Loam	40	20	40
Sandy Loam	30	30	40
Loamy Sand	0	60-65	35-40

Type 2 – Import BSM

Test soil at time of delivery or mixing, or have vendor provide certification that the soil meets the above BSM specifications.

Type 3 – Import Sand-Compost and Mix

Import materials and mix on-site, or mix at supplier location, to meet the requirements listed in Type 1, above, as follows:

- 60-65% gravelly sand by volume
- 35-40% compost by volume

Gravelly Sand must meet the following gradation:

Sieve size	Percent Passing
3/8 inch	100
US No. 4	95-100
US No. 10	75-90
US No. 40	25-40
US No. 100	4-10
US No. 200	2-5

Approved gravelly sand:

Green Earth Screen Sand (Green Earth Technologies, Bellingham)
Miles Sand & Gravel Utility Sand (Miles Sand & Gravel, Roy).

Compost must meet the specifications per D6-04.1(B), below.

B. Compost and Mulch for Bioretention

Compost and Mulch are applied on top of the BSM to hold in moisture, prevent weeds, and prevent erosion. Use Compost in the bottom of the Bioretention facilities, and use wood chip or other Mulch composed of shredded or chipped hardwood or softwood on bioretention slopes.

Apply Compost or Mulch on top of the Bioretention Soil Mix layer to a maximum depth of three (3) inches thick for compost or four (4) inches thick for wood chips (thicker applications can inhibit proper oxygen and carbon dioxide cycling between the soil and atmosphere) after plants have been installed.

Compost shall meet the following:

- Fine Compost specification (Standard Specifications 9-14.4(8)), produced according to WAC 173-350-100, Solid Waste Handling Standards, Definitions, and 173-350-220, Compost Facilities, or meeting pathogen and contaminant standards in the above WAC, or having the US Composting Council's "Seal of Testing Assurance" (STA). Compost suppliers must be a participant in the STA testing program.
- The following compost mixes are approved:

  Cedar Grove compost (Maple Valley)
  GroCo, Steerco (many suppliers)

Mulch shall be free of weed seeds, soil, roots and other material that is not trunk or branch wood and bark.

Mulch shall not include grass clippings (decomposing grass clippings are a source of nitrogen and are not recommended for mulch in bioretention areas), mineral aggregate, or pure bark (bark is essentially sterile and inhibits plant establishment).

As an alternative to mulch, a dense groundcover may be used. Mulch is required in conjunction with the groundcover until groundcover is established.

C. Retention Zone Aggregate for Bioretention

Use retention zone material's pore spaces as additional storage reservoir for rain gardens with underdrains and bedding for underdrain pipe.

For retention zones with slotted underdrain pipe, use either Gravel Backfill for Drains per Standard Specifications 9-03.12(4) or Type 26 Mineral Aggregate as follows:

Type 26 Mineral Aggregate:

Sieve Size	Percent Passing
¾ inch	100
¼ inch	30-60
U.S. No. 8	0-20
U.S. No. 50	0-2
US No. 200	0-1.5

Geotextile not required.

For an underdrain with perforated PVC underdrain pipe, use the following aggregate for the retention zone:

¾-inch to 1-1/2-inch double-washed drain rock (ASTM No. 57 aggregate or equivalent).

D. Overflows for Bioretention

When specified by the Developer, an overflow device shall be provided that safely conveys overflow without causing flooding or erosion downstream.

Use the following for overflows; also see Standard Detail NDP-8 and D7-02.3 Storm Drain Pipe and Culvert Materials:

Overflow drain pipe – PVC-SDR 35 or schedule 80 PVC pipe, minimum diameter 3"

Overflow grates/screens – Atrium grate

Overflow strainer or grate - grating and frame shall be aluminum, stainless steel or plastic,[1] medium duty.

The following overflow products are approved:

Atrium Grate 3",4", 6" round:
NDS models 70, 75, 80
Atrium grate:
ADS model 0663SDX
Neenah grate:
R-4346, R-2560-E2, R-2561, R-4351-C, R-4353, R-4351-B, R-4351-D
Olympic Foundry:
MH25

E. Plants for Bioretention (Rain Gardens, Bioretention Swales, Downspout Planter Boxes)

Native plants from the Pacific Northwest region shall be used whenever possible. Hardy cultivars that are not invasive and do not require chemical inputs may also be used. Plants may be chosen from lists provided in the *Rain Garden Handbook for Western Washington Homeowners* (Washington State University, 2007), the *Low Impact Development Technical Guidance Manual for Puget Sound* (Puget Sound Partnership and Washington State University, 2005 or current), both available on the web (see D1, References).

For areas within the public right-of-way, trees that are tolerant of the site conditions and approved for streetscapes may be used.

Select and place bioretention plants to match the site's sun, moisture and soil conditions. Plants should be planted at high enough density to cover (or shade) the entire surface of the rain garden within two years of planting. As a general guideline, plant a minimum of three types of shrubs and three types of herbaceous plants in each facility to protect against facility failure due to disease or insect infestation of a single species.

All plant materials should have normal, well-developed branches and root systems, and be free from physical defects, plant diseases, and insect pests. Small plant material is recommended for best survival and lowest expense. Optimum planting time is typically fall (beginning mid October). Spring and summer planting likely will require more watering during the summer months, and winter planting is acceptable, but may result in mortalities from freezing temperatures.

[1] If aluminum, stainless steel or plastic are not available, asphalt coated galvanized materials shall be used if available. Avoid galvanized metals because they leach zinc into the environment, especially in standing water situations, and at high concentrations zinc can be toxic to aquatic life.

Bioretention Swales may be planted with a mixture of shrubs, grasses and ground covers if the Developer can demonstrate that conveyance capacity will be maintained when the plants are mature.

Plant vegetation according to the following moisture tolerance zones:

Zone 1: Generally the bottom of the facility; area of periodic or frequent standing or flowing water. Zone 1 plants will also tolerate the seasonally dry periods of summer in the Pacific Northwest without extra watering and may also be applicable in Zone 2 or 3.

Zone 2: Periodically moist or saturated during larger storms. Plants listed under Zone 2 will also be applicable in Zone 3.

Zone 3: Dry soils, infrequently subject to inundation or saturation. This area can be used to transition or blend with the existing landscape.

D6-04.2 Pervious Pavement

This work shall consist of construction of the pervious pavement section as described in this section. Three types are allowable: pervious asphalt, pervious concrete, or pervious pavers, which include grass and gravel paving systems.

A. Wearing Course

Pervious Asphalt or Pavers – for specifications and construction methods, use *Low Impact Development: Technical Guidance Manual for Puget Sound (Puget Sound Partnership*, 2005 or current version), *Permeable Interlocking Concrete Pavements'* latest edition by the Interlocking Pavement Institute, or per the designer or manufacturer.

The following pervious pavement products are approved:

Porous/Permeable/pervious pavers:

Invisible Structures GrassPave2
Presto Geosystems
Uni-Eco-Stone
Uni-Ecoloc
Eco-Priori
Hastings Check Block
Grasscrete
Turfstone
Geoblock 5150
Tufftrack Grassroad Pavers
Grassy Pavers
Invisible Structures Gravelpave2
Turf & Gravel Pavers
Aqua Pave Old Countrystone
Aqua Pave Standards
Aqua Pave Venetian Cobble

Pervious Concrete – Use ACI 522.1 *Specification for Pervious Concrete Pavement* published by the American Concrete Institute, Farmington Hills, Michigan. For projects larger than 5,000 square feet, a test panel must be submitted to the inspector prior to installation.

B. Reservoir Course

The reservoir course is designed to structurally support the pervious pavement wearing course, as well as provide water storage. Depth will be dependent on meeting the minimum depth requirement for the base course (reservoir course plus the optional choker course) of 6" and the need to store stormwater to meet flow control requirements. Depth and area based on modeling results; for MR5 when flow control and/or runoff treatment do not apply, per simplified sizing tables (See Table 6.13).

Use 2.5 inch to 0.5 inch uniformly graded crushed (angular) thoroughly washed stone (AASHTO No. 3), 6-36" depth.

--or--

Use thoroughly washed clean Permeable Ballast meeting the requirements of Standard Specifications (2010) 9-03.9(2), or alternatively, use non-washed Permeable Ballast that has minimum void ratio of 35%.

C. Water Quality Treatment Layer

The BSM specifications in D6-04.1 meet the soil requirements for Runoff Treatment; see Section D6-01.1 for more information.

D. Leveling Course (Also called Choker Course or Filter Course)

The Leveling Course is an optional layer that lies between the pervious pavement wearing course and the reservoir course, and is considered part of the base course. It is generally one inch to two inches in depth, and is intended to provide a uniformly graded surface over which to place the wearing course, reduce rutting from delivery vehicles during pavement installation, and more evenly distribute loads to the underlying material.

Use 1.5-inch to U.S. No. 8 uniformly graded crushed (angular) thoroughly washed stone

E. Geotextile

Geotextile is optional. If specified by the engineer, use nonwoven geotextile for separation (Standard Specifications, 9-33.2(1) Table 3, separation, nonwoven).

The following geotextile products are approved:

Geotextile Nonwoven polypropylene:

Ling Industrial Fabrics, Inc. model 275EX
TNS Advantaged Technologies models R060, R080
Carthage Mills models FX60HS, FX70HS, FX80HS
DuPont DeNemours model SF65
Ten Carte (Mirafi) models 600X, FW700, 1120N
Skaps Industries LLC model GT60
Propex Inc. model GeoTex801

D6-04.3 Underdrain for Bioretention or Pervious Pavement

A. Underdrain Pipe

Minimum 0.5% slope. Do not wrap in filter fabric. Attach 6-inch rigid non-perforated pipe perpendicular at bottom of facility for clean-out.

Option 1: Manufactured Slotted pipe

- Allows for pressurized water cleaning and root cutting if necessary.
- Slotted subsurface drain PVC per ASTM D1785 Schedule 40 for privately owned and maintained facilities only. Use an appropriate coupling if connecting to a city-owned pipe.
- Slotted subsurface drain PVC per D7-02.3 for systems that will be owned and/or maintained by the City of Bellevue.
- 4-8" or as specified by the designer.

Option 2: Onsite Fabricated Slotted Pipe

- Allows for pressurized water cleaning and root cutting if necessary. Use solid PVC Schedule 40 for privately owned and maintained facilities only. Use an appropriate coupling if connecting to a city-owned pipe.
- Use solid PVC per D7-02.3 for systems that will be owned and/or maintained by the City of Bellevue.
- Cut slots perpendicular to the long axis of the solid PVC pipe, slots are 0.04-0.069 inches wide by 1 inch long and spaced 0.25 inches apart (spaced longitudinally). Arrange slots in four rows spaced on 45-degree centers and cover ½ the circumference of the pipe. Use filter materials with smallest aggregate larger than slot size.

Option 3: Perforated PVC, Schedule 40 or slotted HDPE pipe for privately owned and maintained systems only

- Cleaning operations may be difficult or impossible.

The following underdrains or Equal are approved:

Manufacturers:

Johnson

CertainTeed Corporation, Lodi, CA

B. Coupler

Match the coupler to fit the underdrain used. Glue or bolt the coupler to the pipes if connecting from a privately owned or maintained system to a pipe or facility owned by the City of Bellevue.

The following couplers and Equal are approved:

Fernco, Davison, MI

D6-04.4 Observation Ports for Bioretention or Pervious Pavement

A. Expandable Test Plugs

The following expandable test plugs for pipes are approved:

Cherne Gripper plugs models MC-99930, MC-99929, MC-99931, MC-99935

B. Coupler

Match the coupler to fit the PVC pipe used. Solvent glued joints are acceptable.

C. End Cap/Pipe Plug

Match the end cap and/or pipe plug to fit the PVC pipe used. Solvent glued joints are acceptable.

D. Bentonite

The manufacturer shall certify that the granular dry bentonite is suitable for sealing monitoring wells for potable water.

E. Well Screen

See manufactured slotted pipe Option 1 for Underdrain for Bioretention or Pervious Pavement or Option 3: Perforated PVC, Schedule 40 for requirements.

D6-04.5 Amended Soil

Amend soils using materials and techniques to meet BMP T5.13, Post Construction Soil Quality and Depth per the latest version of "Guidelines and Resources for implementing Soil Quality and Depth BMP T5.13" at www.soilsforsalmon.org. The "Permitted Composting Facilities in Washington that Sell Bulk Compost" and "Soil and Compost Analytical Labs Serving the Northwest" from Section Seven are approved.

D6-04.6 Roof Downspout Dispersion

A. Pop-up Drainage Emitter

The following pop-up emitters are approved:

NDS model L422G, or Equal

B. Splash Blocks

Place splash block (minimum 11 inches wide by 14 inches long) or pad of crushed rock (2 feet wide by 3 feet long by 6 inches deep) under roof downspouts to direct water to an appropriate vegetated flow path.

D6-04.7 Rain Recycling

A. Rain barrels for use for rain recycling in single family applications. 50 to 60 gallon storage capacity typical, with screened lid, overflow, and hose bib, per Standard Detail NDP-18.

The following plastic rain barrels (or Equal) are approved:

Poly material:

Chicago model 18122
Suncast model RB5010PK
Emsco model 2771-1
Mayne model 5847WH

Fiskars model 5997

D6-04.8 Vegetated Roofs

The plants listed in Table 6.16 are suitable for use on vegetated roofs. This list is provided as a convenience and is not considered complete. These and other plants may be used as recommended by a vegetated roof design professional based on site conditions.

Table 6.16. Plants for Vegetated Roofs

Scientific Name	Common Name	Plant Type
Achillea tomentosa	Woolly yarrow	Herb
*Arctostaphylos uva-ursi**	Kinnikinnick	Groundcover (woody)
Armeria maritime	Sea pink, sea thrift	Herb
Carex inops (pensylvanica)	Long-stoloned sedge	Sedge
*Eriophyllum lanatum**	Oregon sunshine	Herb
Festuca brachyphylla	Pt. Joe fescue	Grass
Festuca rubra	Red creeping fescue	Grass
Festuca idahoensis	Idaho fescue	Grass
*Gaultheria shallon**	Salal	Shrub
Phlox subulata	Creeping phlox	Herb
*Polystichum munitum**	Sword fern	Fern
*Saxifraga caespitosa**	Tufted saxifrage	Herb
Sedum album	White stonecrop	Succulent
Sedum oregonum	Oregon stonecrop	Succulent
Sedum reflexum	Spruce-leaved stonecrop	Succulent
Sedum spectabile 'Frosty Morn'	Variegated blush stonecrop	Succulent
Sedum spurium	Two-row stonecrop	Succulent
Sedum 'Vera Jameson'	Showy stonecrop	Succulent
Sisyrinchium idahoensis	Blue-eyed grass	Grass
Thymus serphyllum	Thyme	Herb (woody)
Triteleia hyacintha	Fool's onion	Herb
Allium cernuum	Nodding wild onion	Herb
Polypodium hesperidum	Western polypody	Fern
*Lupinus polyphyllus**	Blue-pod lupine	Herb
Fragaria chiloensis	Sand strawberry	Herb

*Native to the Pacific Northwest (https://www.seattle.gov/dpd/GreenBuilding/Resources/TechnicalBriefs/DPDS_009485.asp#design.

D6-04.9 Construction Requirements

For installation instructions and limits on use of materials for Natural Drainage Practices, install per the design engineer's or manufacturer's direction, or see the LID Manual, available online per Section D1-03.

D6-04.10 Miscellaneous Products

A. Catch basins for use in residential lots.

The following plastic catch basins or Equal are approved:

9" x 9"":

ADS models 0909SD2, 0909SD4,

12” x 12:

ADS models 1212SD2, 1212SD4

NDS #1216 riser, #1217 riser with two openings, #1225 sump box

12”, 18”, 24” diameter

Hanson Type 45

12”, 18” Diameter

Nyloplast Drawing No. 7001-110-374

END OF SECTION D6

CHAPTER D7 – MATERIALS

TABLE OF CONTENTS

D7-01 GENERAL D7-1
D7-01.1 Manufacturer's Certificates of Compliance D7-1
D7-02 CONVEYANCE SYSTEMS D7-1
D7-02.1 General D7-1
D7-02.2 Open Channels D7-1
D7-02.3 Storm Drain Pipe and Culvert Materials D7-1
D7-02.4 Pipe Bedding D7-3
D7-02.5 Trench Backfill D7-4
D7-02.6 Private Conveyance Systems D7-4
D7-02.7 Outfalls D7-4
D7-02.8 Couplings D7-5
D7-02.9 Steel Casings D7-5
D7-02.10 Casing Spacer D7-5
D7-03 MANHOLES, CATCHBASINS, AND INLETS D7-6
D7-03.1 Precast Concrete Products D7-6
D7-03.3 Structure Backfill D7-7
D7-04 FLOW CONTROL - DETENTION FACILITIES D7-7
D7-04.1 General D7-7
D7-04.2 Control Structures D7-7
D7-04.3 Ponds D7-8
D7-04.4 Underground Detention Systems D7-10
D7-05 FLOW CONTROL - INFILTRATION SYSTEMS D7-11

TABLES

Table 7.1 Mix #3 Wet Area Seed Mix* D7-10
Table 7.2 Recommended Emergent Wetland Plant Species* D7-9

CHAPTER D7 – MATERIALS

D7-01 GENERAL

D7-01.1 Manufacturer's Certificates of Compliance

Contractor shall provide Manufacturer's Certificate of Compliance in accordance with Section 1-06.3 of the Standard Specifications when requested by the City for all pipe, fittings, precast concrete products, castings, and manufactured fill materials to be used in the project.

D7-02 CONVEYANCE SYSTEMS

D7-02.1 General

D7-02.2 Open Channels

Rock riprap for channel armoring shall conform to Section 9-13 of the Standard Specifications.

Seed mixes for bio-swales and roadside ditches are as follows:

Mix# I - (Dry conditions)

30% Colonial Bentgrass

30% Kentucky Bluegrass

20% Tall Fescue

15% Perennial Rye grass

5% White or Red Clover

Application Rate = 120 lbs./acre

Mix #2 - (High groundwater conditions)

30% Creeping Red Fescue

30% Redtop Bentgrass

30% Meadow or Pacific Foxtail

5% Timothy

5% Birdsfoot Trefoil

Application Rate = 60 lbs./acre

D7-02.3 Storm Drain Pipe and Culvert Materials

Only the pipe materials listed are approved for use in storm drain systems and culverts. Materials shall meet the noted sections of the Standard Specifications and as modified herein:

Reinforced Concrete Pipe (RCP), Cl. 3 (min.)	9-05.7(2)
Solid Wall PVC Pipe, SDR 35 (min.)	9-05.12(1)

Profile Wall PVC Pipe	9-05.12(2)
Ductile Iron Pipe (DIP), Class 52	9-05.13
Corrugated Polyethylene Storm Sewer Pipe	9-05.20
High Density Polyethylene Pipe (HDPP)	D7-02.3(D)
Corrugated Polyethylene Tubing (single wall)	D7-02.3(E)
Corrugated Polypropylene Pipe (double wall)	D7-02.3(F)

(A) Solid Wall Polyvinyl Chloride (PVC) Pipe

PVC pipe must be at least SDR 35 and meet the requirements of ASTM D 3034 for diameters up to 15 inches and ASTM F 679, for sizes 18 to 27 inch diameter.

(B) Profile Wall PVC Pipe

Profile wall PVC pipe shall conform to AASHTO M 304. Joints shall be an integral-bell gasketed joint conforming to ASTM D 3212. Elastomeric gasket material shall conform to ASTM F 477.

The minimum pipe diameter shall be 8 inches. The maximum pipe diameter shall be 15 inches or the diameter for which a supplier has a joint conforming to ASTM D 3212, whichever is less.

Fittings for profile wall PVC pipe shall meet the requirements of AASHTO M 304 and shall be injection molded, factory welded, or factory solvent cemented.

(C) Corrugated Polyethylene Storm Sewer Pipe (CPE)

Corrugated polyethylene storm sewer pipe shall meet the requirements of AASHTO M-294, Type S.

The minimum pipe diameter shall be 8 inches. The maximum pipe diameter shall be 36 inches or the diameter for which a supplier has a joint conforming to ASTM D 3212, whichever is less.

Joints for corrugated polyethylene culvert pipe shall be classified as "watertight." Watertight joints shall be made with a sleeve or with a bell spigot and shall conform to ASTM D 3212 (10.8 psi) using elastomeric gaskets conforming to ASTM F 477. Gasketed joints shall be lubricated as recommended by the producer during installation.

"Soiltight" joints shall not be permitted.

Fittings for corrugated polyethylene storm sewer pipe shall be blow molded, rotational molded, or factory welded.

Thermoplastic pipe fittings shall meet the requirements set forth in AASHTO M 294.

Pipes must meet the air leakage test; see Section D8-09 herein for testing requirements.

(D) High Density Polyethylene Pipe (HDPP)

HDPP shall be used outside of the traveled roadway. Primary use of this material includes steep slope installations and overbank drains.

HDPP shall be manufactured in accordance with ASTM F 714 or ASTM D 3035. Resin shall be Type III - C5P34 as set forth in ASTM D1248. The minimum Standard Dimension Ratio (SDR) is 32.5 with a design working pressure rating of at least 50 psi at 25 degrees C.

HDPP and fittings shall be joined by the butt fusion process per ASTM D 2657 and the manufacturer's specific recommendations. Mechanical (bolted) flange connections may be used to facilitate pipeline installation.

HDPP fittings shall be manufactured in accordance with ASTM D 2683 or ASTM D 3261.

(E) Corrugated Polyethylene Tubing (CPT)

Single wall corrugated polyethylene tubing (CPT) is approved for privately owned and maintained overbank drains only in accordance with Section D4-04.8(B) herein.

CPT shall conform to ASTM F-405. Minimum CPT diameter is four (4) inches and maximum allowed diameter is six (6) inches.

Fittings for CPT shall be blow molded, rotational molded, or factory welded. Thermoplastic pipe fittings shall meet the requirements set forth in AASHTO M 294.

(F) Corrugated Polypropylene Pipe (Double Wall)

Double wall corrugated polypropylene pipe is approved for use in culvert and storm drainage applications in 12 to 30-inch diameters.

Polypropylene pipe shall meet ASTM F2736 requirements.

All joints shall be made with a bell/bell or bell and spigot coupling and shall conform to ASTM D3212, using elastomeric gaskets conforming to ASTM F477. All gaskets shall be factory installed on the pipe in accordance with the producer’s recommendations.

D7-02.4 Pipe Bedding

For Reinforced Concrete Pipe (RCP), Corrugated Metal Pipe (CMP - which includes steel and aluminum), and Ductile Iron Pipe (DIP), bedding material shall be in accordance with Section 9-03.12(3) Gravel Backfill for Pipe Zone Bedding of the Standard Specifications.

For convenience, crushed rock bedding conforming to crushed surfacing top course material of Section 9-03.9(3) Crushed Surfacing of the Standard Specifications may also be used as bedding material for pipe.

In unpaved areas, the Contractor may request to use excavated material used as pipe bedding where it has been determined by the Engineer as suitable meeting the requirements of Section 9-03.12(3) Gravel Backfill for Pipe Zone Bedding of the Standard Specifications, and proper compaction levels can be achieved.

For PolyVinyl Chloride (PVC) pipe, Corrugated PolyEthylene (CPE) pipe, and other thermoplastic pipe, bedding material shall be imported material conforming to crushed

surfacing top course material of Section 9-03.9(3) Crushed Surfacing of the Standard Specifications.

For ductile iron storm drain pipe, the Contractor may request to use excavated material as pipe bedding where it has been determined by the Engineer as suitable material meeting the requirements of Section 9-03.12(3) Gravel Backfill for Pipe Zone Bedding of the Standard Specifications and proper compaction levels can be achieved.

D7-02.5 Trench Backfill

For transverse trenches (perpendicular to the roadway centerline) in paved areas, crushed rock backfill conforming to Section 9-03.9(3) Crushed Surfacing of the Standard Specifications shall be used as trench backfill for pipe.

For longitudinal trenches (trenches parallel to the centerline of the roadway) in paved areas, backfill material (4 feet and deeper below finished grade) shall conform to Section 9-03.14(1) Gravel Borrow of the Standard Specifications. The Contractor may request to use excavated material as trench backfill and must demonstrate to the Engineer that the suitable excavated material conforms to Section 9-03.14(1) Gravel Borrow of the Standard Specifications and proper compaction levels can be achieved. Admixtures and/or additives may not be used to modify the moisture content in order to meet compaction specifications.

The top 4 feet of longitudinal trenches shall be backfilled with crushed rock conforming to Section 9-03.9(3) Crushed Surfacing of the Standard Specifications.

In unpaved areas, trench backfill material shall conform to Section 9-03.14(1) Gravel Borrow of the Standard Specifications. The Contractor may request to use excavated material as trench backfill when it has been determined by the Engineer to be suitable and conforms to Section 9-03.14(1) Gravel Borrow of the Standard Specifications and proper compaction levels can be achieved.

In paved areas within the public right-of-way, backfilling storm drain trenches shall be as specified in Standard Detail D-25. Controlled Density Fill (CDF) may be used lieu of Crushed Surfacing - Top Course.

D7-02.6 Private Conveyance Systems

Private conveyance systems shall comply with all criteria and standards for drainage systems set forth herein unless specifically exempted.

D7-02.7 Outfalls

Rock riprap for scour protection and energy dissipation shall conform to Section 9-13 of the Standard Specifications.

Gabions for energy dissipators shall conform to Section 6-09.3(6) "Gabion Cribbing" and Section 9-27.3 "Gabion Cribbing" of the Standard Specifications.

Precast concrete products for energy dissipators shall comply with Section 7-05.2 of the Standard Specifications.

Acceptable pipe materials for all outfall sections of storm pipe shall include those listed in D7-02.3 of these Standards, except that PVC pipe is not permitted due to light sensitivity and degradation.

D7-02.8 Couplings

Approved couplings for use on storm drainage mains with differing materials or diameters or non-approved materials shall be ductile iron mechanical couplings (equal to ROMAC).

D7-02.9 Steel Casings

Steel casing shall be black steel pipe conforming to ASTM A-53. Before installation, coat casing exterior with shop-applied anticorrosive coating conforming to AWWA C210. Minimum coating thickness shall be 16 mils dry film thickness (DFT); however, thickness shall not exceed manufacturer's recommended thickness. Coating type shall be a polyamide epoxy-coal tar equal to Tnemec Hi-Build Tneme-Tar, Series 46H-413.

Casing wall thickness shall be 0.250 inch for casings 24 inches or less in diameter and 0.375 inch for casings over 24 inches in diameter. Carrier pipe for sewage shall be PVC (SDR 35).

D7-02.10 Casing Spacer

Casing spacers shall be installed in casings over 10 feet long. Where casing spacers are not used, the carrier pipe shall be more than 10 feet in length (no pipe joints inside casing). Casing spacer shell shall be manufactured in two pieces from heavy gauge T-304 stainless steel or 14 gauge hot rolled pickled steel joined with ribbed flanges. The shell shall be lined with a PVC liner 0.090 inch thick with 85-90 durometer. Carbon steel casing spacer shell and risers shall be coated with a heat fused PolyVinyl chloride coating, or hot-dip galvanized.

PolyVinyl Chloride Coating Specifications:

Durometer - Shore A2 (10 Sec.) (ASTM D-1706-61T)	-	80
Max. operating temperature (constant)	-	150°(65°C)
Electrical properties (ASTM D-149-61) (short time .010")	-	1380 V/Mil

Resistance:

Salt spray (ASTM B-117)	-	Excellent
Acids	-	Good
Alkalies	-	Good

All nuts and bolts shall be 18-8 stainless steel.

Runners shall be supported by risers made from heavy gauge T-304 stainless steel or 12 gauge hot rolled pickled steel.

Runners shall be ultra high molecular weight polymer with high resistance to abrasion and sliding wear.

TYPICAL DATA			
PROPERTY	**ASTM METHOD**	**UNITS**	**VALUE**
Specific Gravity	D-792	gm/cc	.934
Tensile Strength (Break)	D-638	PSI	3500
Elongation (Break)	D-638	%	380
Izod Impact	D-256	Ft.Lbs./in. of notch	No break
Hardness	D-2240	Shore D	67
Coefficient of Friction	D-1894	-	0.11 - 0.13
Heat Distortion Temp. 66 PSI	D-648	C	88
Coefficient of Thermal	D-696	F-1	5.5 x 10-5
ABRASION CHARACTERISTICS			
Taber Abrasion	D-1044	Mg/loss	N
Sand Slurry *			7

* Sand slurry condition - 7 hours in one part sand/ one part water slurry at 1725 RPM.

Carbon steel - 100, Hifax - 15. The lower the value, the more resistant to abrasion. Casing spacers shall be "center positioning" type. Height of risers and runners combined shall be sufficient to keep the carrier pipe bell, couplings, or fittings at least 0.75" from the casing pipe wall at all times and provide at least 1" clearance between runners and top of casing wall, to prevent jamming during installation.

D7-03 MANHOLES, CATCHBASINS, AND INLETS

D7-03.1 Precast Concrete Products

Precast concrete products for manholes, inlets, and catch basins shall comply with Section 7-05.2 of the Standard Specifications.

D7-03.2 Metal Covers

(A) Castings

Metal castings for manhole rings, round covers, frames, grates, and rectangular covers shall conform to the Standard Details and Section 9-05.15 of the Standard Specifications as modified herein.

All catch basin grated covers in roadways shall be bolt-locking vaned ductile iron grates with cast iron frames, per these engineering standards or approved equal.

All grated covers shall have in raised letters "Outfall to Stream, Dump No Pollutants".

Manhole round covers and rectangular covers shall have the word "DRAIN" in block letters at least two (2) inches high, recessed so as to be flush with the surface.

When bolt locking covers and grates are required, the locking bolts shall be 5/8" - 11 NC stainless steel type 304 socket (allen) head bolts, 2 inches long.

Dipping, painting, welding, plugging or any repair of defects shall not be permitted in accordance with AASHTO M 306.

(B) Hatches

Metal hatches and access covers shall be constructed with a non-slip treatment having a coefficient of friction between 0.6 and 1.0 wet, as determined by ASTM C1028-89. Hatches and access covers located on slopes of 4% or greater shall have a coefficient of friction between 0.8 and 1.0 wet, as determined by ASTM C1028-89. Prior to installation, the Contractor shall supply the Engineer with a shop drawing of the appurtenance specifying a coefficient of friction meeting or exceeding the above requirement. Hatches shall include recessed padlock hasps sized to accept the City of Bellevue Storm Division padlocks.

D7-03.3 Structure Backfill

In paved areas, backfill material (4 feet and deeper below finished grade) shall conform to Section 9-03.14(1) Gravel Borrow of the Standard Specifications. The Contractor may request to use excavated material as trench backfill when it has been determined by the Engineer to be suitable and conforms to Section 9-03.14(1) Gravel Borrow of the Standard Specifications and proper compaction levels can be achieved.

The top 4 feet around structures shall be backfilled with crushed rock conforming to Section 9-03.9(3) Crushed Surfacing - Top Course of the Standard Specifications.

In unpaved areas, structure backfill material shall conform to Section 9-03.14(1) Gravel Borrow of the Standard Specifications. The Contractor may request to use excavated material as structure backfill when it has been determined by the Engineer to be suitable and conforms to Section 9-03.14(1) Gravel Borrow of the Standard Specifications and proper compaction levels can be achieved.

D7-04 FLOW CONTROL - DETENTION FACILITIES

D7-04.1 General

All covers and grates on access structures to the detention system shall be bolt locking.

D7-04.2 Control Structures

Precast concrete products for control structures shall comply with Section 7-05.2 of the Standard Specifications.

Flow restrictors in detention control structures shall be fabricated from 0.060" aluminum pipe, PVC pipe (Profile Wall, Schedule 40 or SDR 35), CPE, or HDPP (SDR 32.5).

Pipe support materials shall match restrictor (if metal). For plastic materials, aluminum (3” W x 0.060" T) or stainless steel (3”W x 0.090"T) shall be used. Pipe supports shall be fastened to the structure wall with 5/8-inch stainless steel expansion bolts or lag and shield.

Orifice plates shall be fabricated from aluminum plate (0.125"), high density polyethylene (HDPE) sheeting (0.25"), or PVC sheeting (0.25"). Orifice plates shall be bolted to the flange on the flow restrictor with stainless steel hardware. Orifices may be fabricated by drilling the specified diameter hole in an end cap.

Protective screening for orifices less than one (1) inch in diameter shall be hot-dipped galvanized, 0.5" x 0.5" "hardware cloth" or polymer geo-grid with the approximate same size openings.

D7-04.3 Ponds

Embankment material for detention ponds shall conform to the guidelines set forth in Chapter III-4.4 of the DOE Manual and DOE's Dam Safety Guidelines, Part IV: Design and Construction, Chapter 3 - "Geotechnical Issues."

Seed mixes for normally dry detention ponds are as follows:

Mix #1 - (Dry conditions)

30% Colonial Bentgrass
30% Kentucky Bluegrass
20% Tall Fescue
15% Perennial Rye grass
5% White or Red Clover

Application Rate = 120 lbs./acre

Mix #2 - (High groundwater conditions)

30% Creeping Red Fescue
30% Redtop Bentgrass
30% Meadow or Pacific Foxtail
5% Timothy
5% Birdsfoot Trefoil

Application Rate = 60 lbs./acre

Mix #3 is the seed mix for normally wet detention ponds and is shown in Table 7.1. The application rate for Mix #3 = 60 lbs./acre

Table 7.1 Mix #3 Wet Area Seed Mix*

Seed Type	% Weight	% Purity	% Germination
Tall or meadow fescue *Festuca arundinacea* or *Festuca elatior*	60-70	98	90
Seaside/Creeping bentgrass *Agrostis palustris*	10-15	98	85
Meadow foxtail *Alepocurus pratensis*	10-15	90	80
Alsike clover *Trifolium hybridum*	1-6	98	90
Redtop bentgrass *Agrostis alba*	1-6	92	85

*Seed mix taken from Table 4.5 from "BMP C120: Temporary and Permanent Seeding" of the DOE Stormwater Management Manual for Western Washington, 2005 Edition.

For ponds requiring emergent wetland plant species, Table 7.2 lists recommended plant varieties.

Table 7.2 Recommended Emergent Wetland Plant Species*

Species	Common Name	Notes	Maximum Depth
INUNDATION TO 1 FOOT			
Agrostis exarata[(1)]	Spike bent grass	Prairie to coast	To 2 feet
Carex stipata	Sawbeak sedge	Wet ground	
Eleocharis palustris	Spike rush	Margins of ponds, wet meadows	To 2 feet
Glyceria occidentalis	Western mannagrass	Marshes, pond margins	To 2 feet
Juncus effusus	Soft rush	Wet meadows, pastures, wetland magins	To 2 feet
Juncus tenuis	Slender rush	Wet soils, wetland margins	
Oenanthe sarmentosa	Water parsley	Shallow water along stream and pond margins; needs saturated soils all summer	
Scirpus atrocinctus (formerly S. cyperinus)	Woolgrass	Tolerates shallow water; tall clumps	
Scirpus microcarpus	Small-fruited bulrush	Wet ground to 18 inches depth	18 inches
Sagittaria latifolia	Arrowhead		
INUNDATION 1 TO 2 FEET			
Agrostis exarata[(1)]	Spike bent grass	Prairie to coast	
Alisma plantago-aquatica	Water plantain		
Eleocharis palustris	Spike rush	Margins of ponds, wet meadows	
Glyceria occidentalis	Western mannagrass	Marshes, pond margins	
Juncus effusus	Soft rush	Wet meadows, pastures, wetland magins	
Scirpus microcarpus	Small-fruited bulrush	Wet ground to 18 inches depth	18 inches
Sparganium emmersum	Bur reed	Shallow standing water, saturated soils	
INUNDATION 1 TO 3 FEET			
Carex obnupta	Slough sedge	Wet ground or standing water	1.5 to 3 feet
Beckmania syzigachne[(1)]	Western sloughgrass	Wet prairie to pond margins	
Scirpus acutus[(2)]	Hardstem bulrush	Single tall stems, not clumping	To 3 feet
Scirpus validus[(2)]	Softstem bulrush		
INUNDATION GREATER THAN 3 FEET			
Nuphar polysepalum	Spatterdock	Deep water	3 to 7.5 feet
Nymphaea odorata[(1)]	White waterlily	Shallow to deep ponds	To 6 feet

Notes:

(1) Non-native species. *Beckmania syzigachne* is native to Oregon. Native species are preferred.

(2) *Scirpus* tubers must be planted shallower for establishment, and protected from foraging waterfowl until established. Emerging aerial stems should project above water surface to allow oxygen transport to the roots.

Primary sources: Municipality of Metropolitan Seattle, *Water Pollution Control Aspects of Aquatic Plants,* 1990. Hortus Northwest, *Wetland Plants for Western Oregon,* Issue 2, 1991. Hitchcock and Cronquist, *Flora of the Pacific Northwest,* 1973.

*Table taken from Table 6.4.1A "Emergent Wetland Plant Species Recommended for Wetponds" from the 1998 Surface Water Design Manual.

D7-04.4 Underground Detention Systems

(A) Vaults

Materials for stormwater detention vaults shall be as approved by the City of Bellevue Building Official.

Any metal structural components shall be protected from corrosion and have a low maintenance coating. The Developer shall submit proposed metal protective coatings with supporting documentation for review prior to drainage plan approval. Coatings shall have a 50 year design life.

Backfill material shall conform to Section 9-03.14 Gravel Borrow of the Standard Specifications. Excavated material may be used as backfill when it has been demonstrated by the Contractor to meet gradation and compaction requirements.

When the structural design does not take into account hydrostatic pressure or buoyancy, footing drains shall be provided around the perimeter of the vault.

Footing drains shall be a minimum of 6-inch diameter PolyVinyl chloride (PVC) pipe, SDR 35, with laser-cut slotted perforations.

Footing drains shall be backfilled with material which conforms to Section 903.12(4) Gravel Backfill for Drains of the Standard Specifications.

For precast vaults, sealing between riser sections shall be accomplished by placing Portland cement mortar, compressible neoprene foam gaskets, asphaltic mastic material, or asphalt impregnated gasket materials between sections, as recommended by the manufacturer to produce a water-tight seal.

(B) Tanks or Pipe

Only the pipe materials listed are approved for use in stormwater detention facilities. Materials shall meet the following sections of the Standard Specifications and as modified herein:

Reinforced Concrete Pipe (RCP), Cl. 3 min.	9-05.7(2)
Corrugated Aluminum Culvert Pipe	9-05.5
Corrugated Steel Culvert Pipe, Treatment 1	9-05.4
Corrugated Steel Pipe Arch, Treatment 1	9-05.4
Corrugated Polyethylene Pipe	9-05.20

All corrugated metal pipe and pipe arch shall be furnished with annular ends, neoprene gaskets, and lap type couplings.

Underdrains shall be a minimum of 6-inch diameter PolyVinyl chloride (PVC) pipe, SDR 35, with laser-cut slotted perforations.

Underdrains within the pipe trench shall be backfilled with material which conforms to Section 9-03.12(4) Gravel Backfill for Drains of the Standard Specifications.

For Reinforced Concrete Pipe (RCP) and other rigid pipe, bedding material shall be in accordance with Section 9-03.12(3) Gravel Backfill for Pipe Bedding of the Standard Specifications.

For Corrugated Metal Pipe (CMP – which includes steel and aluminum) and other flexible pipe, bedding material shall conform to Section 9-03.16 Bedding Material for Flexible Pipe per the Standard Specifications.

Trench backfill material shall conform to Section 9-03.14 Gravel Borrow of the Standard.

Specifications. Excavated material may be used as pipe bedding and/or trench backfill when it has been demonstrated by the Contractor to be suitable.

D7-05 FLOW CONTROL - INFILTRATION SYSTEMS

Perforated pipe for roof downspout systems and infiltration trenches shall conform to Section D7-02.3 herein. Single wall CPE pipe is not allowed.

Gravel backfill for infiltration systems shall meet the requirements for coarse aggregate for Portland cement concrete, Grading No. 4 or 5 as listed in Section 9-03.1(3)C of the Standard Specifications.

END OF CHAPTER D7

CHAPTER D8 – METHODS OF CONSTRUCTION

TABLE OF CONTENTS

D8-01 GENERAL D8-1
D8-02 CLEARANCE BETWEEN UTILITY LINES D8-1
D8-03 CONNECTIONS/MODIFICATIONS TO PUBLIC DRAINAGE SYSTEM D8-1
D8-04 CONVEYANCE SYSTEMS D8-2
D8-04.1 General D8-2
D8-04.2 Locators D8-2
D8-04.3 Storm Drain Trench D8-2
D8-04.4 Pipe Bedding D8-2
D8-04.5 Laying Storm Sewer Pipe D8-3
D8-04.6 Backfilling Trenches D8-3
D8-04.7 Compaction D8-4
D8-04.8 Private Drainage Systems D8-4
D8-05 MANHOLES, CATCH BASINS, & INLETS D8-4
D8-05.1 General D8-4
D8-05.2 Backfilling Structures D8-4
D8-05.3 Adjusting Manholes and Catch Basins to Grade D8-5
D8-06 FLOW CONTROL - DETENTION FACILITIES D8-5
D8-06.1 Control Structures D8-5
D8-06.2 Ponds D8-5
D8-06.3 Underground Detention Systems D8-6
D8-06.4 Storm Water Detention Facility Leakage Testing D8-8
D8-07 FLOW CONTROL - INFILTRATION SYSTEMS D8-7
D8-08 ABANDONING FACILITIES D8-7
D8-08.1 Abandoning Pipe In Place D8-7
D8-08.2 Abandoning Structures D8-8
D8-08.3 Demolition or Removal of Structures D8-8
D8-09 TESTING OF GRAVITY STORM DRAINS D8-9
D8-09.1 Water Test D8-9
D8-09.2 Air Testing D8-10
D8-9.3 Deflection Test for Flexible Pipe D8-11
D8-10 TELEVISION INSPECTION D8-11

D8-11 TESTING OF CONCRETE STRUCTURES D8-11
D8-11.1 Testing D8-11
D8-11.2 Failure D8-12
D8-11.3 Acceptance D8-12
D8-12 TRENCHLESS CONSTRUCTION D8-13
D8-13 TRENCH EXCAVATION D8-13

TABLES

Table 8-09.1 ..... D8-9
Table 8-09.2 ..... D8-10
Table 8-11.1 ..... D8-12

CHAPTER D8 – METHODS OF CONSTRUCTION

D8-01 GENERAL

All construction on City rights-of-way shall be done in accordance with the City's standards and the procedures and methods set forth in the Standard Specifications as modified herein.

Prior to the final inspection, the Contractor shall clean the storm drain system and any off-site drainage systems affected by construction activities by a method approved by the City. Wastewater from such cleaning operations shall not be discharged to the storm drainage system or surface waters.

Prior to the installation of impervious surfacing, detention facilities shall be operational.

Prior to occupancy of any single phase of a phased development, storm drainage facilities shall be completed and operational to provide conveyance, flow control, and water quality treatment for the phase for which occupancy is requested.

Contractor shall provide Manufacturer's Certificate of Compliance in accordance with Section I - 06.3 of the Standard Specifications when requested by the City for all pipe, fittings, precast concrete products, castings, and manufactured fill materials to be used in the project.

Testing of the drainage system, by the Contractor, when required by the City, shall conform to the testing requirements for the particular component of the system as set forth in the Standard Specifications and issued permits.

Documentation for the newly installed drainage facilities required by these Standards, the Developer Extension Agreement, or issued permits shall be submitted and approved prior to construction acceptance.

D8-02 CLEARANCE BETWEEN UTILITY LINES

If the minimum vertical distances between utility pipes are less than 6-inches and such installation is approved by the City, a pad shall be placed between the pipes. The pad shall be O.D. x O.D. x 2.5 inches thick minimum or as required to protect the pipes. Above O.D. is equal to the outside diameter of the larger pipe. The pad shall be a polyethylene foam plank (Dow Plastics Ethafoam" 220), or approved equal. Additional measures may be necessary to ensure system integrity and may be required as evaluated by the City on a case by case basis.

D8-03 CONNECTIONS/MODIFICATIONS TO PUBLIC DRAINAGE SYSTEM

When connecting existing metal storm pipe to new catch basins, the Contractor shall treat the newly exposed end of the pipe per Section 9-05.4(4) Asphalt Coatings and Paved Inverts of the Standard Specifications.

Where new pipe is connected to existing, the Contractor shall verify the type of existing pipe and join in kind with new. If the existing pipe is of a nonapproved material or of dissimilar materials, the Contractor shall connect the new to the existing with an appropriate coupling device. If a water tight coupling cannot be installed, then connection will be made with a structure. See Section D7-02.8 herein for coupling material requirements.

The following connections to a pipe system shall be made only at structures:

1. When the inletting pipe is greater than 8 inches in diameter; or

2. When roadway, driveway or parking lot runoff is conveyed; or
3. When commercial and multi-family stormwater pipes connect to the municipal conveyance system; or
4. When connecting to CMP conveyance systems.

Roof/footing/yard drain pipes, 8 inches or less in diameter, from single family residences, may be connected to the existing stormwater conveyance system by core drilling the appropriate hole and installing a saddle tee on concrete, PVC and DI stormwater pipes only.

For profile wall PVC or CPE pipe, an insert-tee or saddle tee may be used. For new stormwater conveyance systems, roof/footing/yard drain pipes shall be connected with tee fittings.

When a connection is made without the benefit of a structure, a clean-out shall be provided upstream of each tee on the inletting private drainage system pipe.

When connecting pipes at structures, match crowns when possible.

If finished floor elevation is lower than adjacent street (top of curb) and a connection to public street drainage system is made, at minimum the property owner shall install a check valve.

D8-04 CONVEYANCE SYSTEMS

D8-04.1 General

Methods of construction for storm drain pipelines and culverts shall conform to Section 7-04.3 Construction Requirements of the Standard Specifications and Chapter III-2 of the Ecology Manual as modified herein.

D8-04.2 Locators

Installation of all non-linear plastic pipe, lot stubs and underdrains shall include a locator wire.

The locator wire shall be installed on top of and secured to the pipe. The Contractor shall furnish and install a No. 12 AWG solid copper wire between drainage structures and extend the wire at least one (1) foot into the structure.

Ends of each storm drain stub at the property line shall be capped and located with a 2" X 4" board, embedded to the stub cap, with a copper locator wire attached, and marked permanently "STORM". The stub depth shall be indicated on the marker.

D8-04.3 Storm Drain Trench

Trenches shall be excavated to the width, depth, and grade as set forth in Standard Details herein. Material excavated that is unsuitable for backfill shall not be used for filling on or around surface water facilities.

In paved areas within the public right-of-way, provide a neat vertical cut in existing pavement by saw cutting.

D8-04.4 Pipe Bedding

Pipe bedding shall conform to Section 7-08.3(1)C Bedding the Pipes of the Standard Specifications as modified herein in order to provide uniform support along the entire pipe barrel, without load concentration at joint collars or bells.

Bedding disturbed by pipe movement, by removal of shoring, or by movement of trench shield or box, shall be reconsolidated prior to placing backfill.

Pipe bedding shall be placed in loose layers and compacted to 90% maximum dry density. Lifts not more than 6 inches in thickness shall be placed and compacted along the sides of the pipe to a height of at least 6 inches above the top of the pipe. Material shall be carefully worked under the pipe haunches and then compacted.

Jetting is not an allowable method to compact the bedding materials.

D8-04.5 Laying Storm Sewer Pipe

Laying pipe shall be in accordance with Section 7-08.3(2)B "Pipe Laying" of the Standard Specifications and include the following:

Survey line and grade shall be furnished by the Developer in a manner consistent with accepted practices.

Existing flows shall be diverted away from the pipe segment being worked on by methods approved by the City.

Pipe shall be lowered into the trench by means of ropes, tripod, crane, or other suitable means. Pipe shall not be dropped or handled roughly. Pipe shall be inspected for defects prior to use and any defective pipe shall be removed from the job site.

Tees and other fittings shall be installed as shown on the Standard Details and the approved plans, or as otherwise directed by the City. These items shall not be backfilled until the City has recorded their exact location.

D8-04.6 Backfilling Trenches

Backfilling shall be accomplished in accordance with Section 2-09 Structure Excavation of the Standard Specifications as modified herein:

In paved areas, trench backfill material shall be compacted to 95% maximum dry density per Section 2-03.3(14)D Compaction and Moisture Control Tests of the Standard Specifications.

In unpaved areas, trench backfill material shall be compacted to 90% maximum dry density per Section 2-03.3(14)D Compaction and Moisture Control Tests of the Standard Specifications.

The Contractor shall arrange for compaction testing to be performed by a certified technician. The Contractor shall provide the Engineer with one copy of the compaction test report within 24 hours of the completion of the test.

Compaction tests shall be made at a maximum of 4 foot depth increments with a minimum of one test for any backfilling less than 4 feet in depth. The maximum space between tests shall not exceed 100 linear feet.

For mechanical compaction methods (“hoe pack,” vibratory roller, static roller, etc.), the maximum backfill lift shall not exceed 2 feet between the application of compaction equipment.

For manual compaction methods (all walk-behind equipment, “jump jack,” etc.), the maximum backfill lift shall not exceed 1 foot between the application of compaction methods.

Jetting is not an allowable method to compact the trench backfill.

Surface restoration shall be as specified in the Right-of-Way Use Permit and as shown on the approved plans.

See Appendix D-1 for trench backfill Standard Details.

D8-04.7 Compaction

All backfill shall be mechanically compacted in accordance with Section 2-09.3(I)E, "Backfilling - Compaction" of the Standard Specifications as modified herein. Each layer shall be compacted to 95% (paved areas) or 90% (unpaved areas) of the maximum dry density per Section 2-03.3(14)D, “Compaction and Moisture Control Tests”, of the Standard Specifications.. When requested by the City, test reports shall be provided by the Contractor to certify that the compaction meets the required levels.

D8-04.8 Private Drainage Systems

The footing drainage system and the roof downspout system shall not be interconnected unless such connection is at least 1 foot below the footing drainage system and down slope of the building foundation.

Corrugated polyethylene tubing (CPT) for overbank drains shall be a continuous piece of tubing from the top of the slope to the discharge point at the bottom of the slope. No joints between the connection to the roof, footing, and yard drains and the discharge point will be allowed. CPT is not allowed in the right-of-way.

D8-05 MANHOLES, CATCH BASINS, & INLETS

D8-05.1 General

The construction of manholes, catch basins, and inlets shall conform to Section 7-05.3 "Construction Requirements" of the Standard Specification as modified herein.

Manholes, catch basins, and inlets shall be precast concrete unless approved otherwise by the City.

All structure ladders, when used, shall be firmly attached using stainless steel hardware and extend to the bottom of the structure.

When connecting to a concrete structure, openings must be core-drilled unless an existing knockout is available. Connections shall be made with watertight rubber boots, sand collars, manhole adapters, or other approved watertight connectors except for : 1) concrete; 2) ductile iron; 3) corrugated metal pipe. For 1,2, and 3 above, connections shall be made with non-shrink Portland Cement Grout to make a watertight connection.

Manholes, catch basins or inlets in easements shall be constructed to provide a stable, level grade for a minimum radius of 2.5 feet around the center of the access opening.

D8-05.2 Backfilling Structures

Backfilling shall be accomplished in accordance with Section 2-09 Structure Excavation of the Standard Specifications as modified herein:

In paved areas, backfill material shall be compacted to 95% maximum dry density per

Section 2-03.3(14)D Compaction and Moisture Control Tests of the Standard Specifications.

In unpaved areas, backfill material shall be compacted to 90% maximum dry density per Section 2-03.3(14)D Compaction and Moisture Control Tests of the Standard Specifications.

The Contractor shall arrange for compaction testing to be performed by a certified technician. The Contractor shall provide the Engineer with one copy of the compaction test report within 24 hours of the completion of the test.

Compaction tests shall be made at a maximum of 4 foot depth increments with a minimum of one test for any backfilling less than 4 feet in depth. At least one (1) compaction test shall be performed at each backfilled structure or for every 50 CY of backfill placed. If the structure (e.g. manhole, catch basin or inlet) is part of a pipeline trench, then trench compaction testing frequency governs.

For mechanical compaction methods ("hoe pack," vibratory roller, static roller, etc.), the maximum backfill lift shall not exceed 2 feet between the application of compaction equipment.

For manual compaction methods (all walk-behind equipment, "jump jack," etc.), the maximum backfill lift shall not exceed 1 foot between the application of compaction methods.

Jetting is not an allowable method to compact the structure backfill.

Surface restoration shall be as specified in the Right-of-Way Use Permit and as shown on the approved plans.

D8-05.3 Adjusting Manholes and Catch Basins to Grade

Where shown on the approved plans or as directed by the City, existing manholes, catch basins and inlets shall be adjusted to conform to finished grade in accordance with Section 7-05.3(l) Adjusting Manholes and Catch Basins to Grade of the Standard Specifications as modified herein.

Where riser bricks (blocks) are used to bring the frame to grade, the maximum height of the brick shall be two rows. If more than two rows of bricks are required, a precast riser section shall be used along with no more than two rows of bricks to complete the adjustment.

Bricks, grade rings and risers shall be wetted just prior to being used and laid with "shove joints." Special care shall be taken to see that all joints are well filled with mortar.

D8-06 FLOW CONTROL - DETENTION FACILITIES

D8-06.1 Control Structures

Follow construction practices set forth for manholes, catch basins, and inlets.

D8-06.2 Ponds

(A) Embankments

Fill placed around structures in the berm embankment shall be placed in four (4) inch maximum lifts and compacted to 95 percent of ASTM D- 1557.

(B) Vegetation & Landscaping

Vegetation and landscaping shall conform to Section 8-02, "Roadside Planting" of the Standard Specifications.

For City maintained facilities, all plant material shall be guaranteed for a period of one (1) year after acceptance. Defective materials shall be promptly replaced in like kind and size. The guarantee period may be extended for those defective materials which are replaced.

D8-06.3 Underground Detention Systems

(A) Vaults

Cast-in-Place and Precast concrete vaults shall conform to Section 6-02, "Concrete Structures" of the Standard Specifications as modified herein and as directed by the Building Official.

(B) Tanks or Pipes

Tanks and pipes used for stormwater detention systems shall conform to the applicable sections of Division 7, "Drainage Structures, Storm Sewers, Sanitary Sewers, Water Mains, and Conduits" of the Standard Specifications as modified herein.

D8-06.4 Storm Water Detention Facility Leakage Testing

(A) Dry Ponds

Leakage rates shall not exceed the maximum allowable infiltration rate of 2 inches per hour. For infiltration rates in excess of the maximum, a liner system shall be installed.

(B) Wet Ponds

If in the opinion of the City, workmanship, materials or infiltration rates appear to contribute to excessive leakage, the pond shall be tested for leakage. Wet ponds shall be filled to the 2-year water surface elevation. Pipe plugs shall be inserted into all inlet and outlet piping. The maximum allowable leakage shall not exceed one percent (1%) of volume below the 2-yr water surface elevation over a 24-hour test period.

(C) Pipe/Tank Systems

Pipe/tanks systems shall be free from visible leaks.

All penetrations shall be sealed to prevent leaks.

Shear gates and valves shall not leak.

Pipe/tank systems with footing or underdrain systems: If in the opinion of the City, workmanship or materials appear to contribute to excessive leakage, the detention system shall be tested for leakage. Systems shall be filled to the 2-year water surface elevation. Pipe plugs shall be inserted into all inlet and outlet piping. The maximum allowable

leakage shall not exceed one percent (1%) of volume below the 2-yr water surface elevation over a 24-hour test period.

(D) Precast and Cast-In-Place Vaults

Precast and cast-in-place vaults shall be free from visible leaks. Cold joints shall include water stops to prevent leakage. Concrete mix designs and placement shall produce compact, dense and impervious concrete with smooth faces. Admixtures should be considered to minimize porosity. All rock pockets, voids, seams, joints, cracks and other defects shall be cleaned and repaired to prevent leakage. Acceptable repairs include epoxy injection, chemical grout injection, epoxy grouting and/or proprietary concrete repair methods as may be approved by the City. "Sacking" with Portland cement grout will not be allowed.

All penetrations shall be grouted to prevent leaks.

Shear gates and valves shall not leak.

Vaults with footing or underdrain systems: If in the opinion of the City, workmanship or materials appear to contribute to excessive leakage, the vault shall be tested for leakage. Vaults shall be filled to the 2-year water surface elevation. Pipe plugs shall be inserted into all inlet and outlet piping. The maximum allowable leakage shall not exceed one percent (1%) of volume below the 2-yr water surface elevation over a 24-hour test period.

D8-07 FLOW CONTROL - INFILTRATION SYSTEMS

Construction of infiltration systems shall conform to Chapter III-3.3 of the DOE Manual except as modified herein.

Excavation of infiltration systems shall be done with a backhoe or excavator working at "arms length" to avoid the compaction and disturbance of the completed infiltration surface.

The facility site shall be cordoned off so that construction traffic does not traverse the area.

An inspection by the civil/geotechnical engineer of record, of the exposed soil shall be made after the infiltration system is excavated to confirm that suitable soils are present.

Infiltration systems for flow control shall not be utilized until construction is complete and disturbed areas have been stabilized, as determined by the City, to prevent sedimentation of the infiltration system. Temporary flow control facilities may be needed to utilize this option.

D8-08 ABANDONING FACILITIES

D8-08.1 Abandoning Pipe In Place

Any property owner who plans to demolish or remove any structure connected to the public storm drainage system shall notify the utility and complete a utility abandonment form prior to the commencement of such work.

Storm drainage pipe demolition shall be performed prior to removal of building foundation. The storm drainage pipe for each building shall be excavated and removed from the house connection to the property line or the main as specified by the Utility. The Contractor shall cap the end of

the the storm drainage pipe to remain in place. Storm drainage pipe demolition shall be performed in the presence of the City of Bellevue Sewer Maintenance Engineering Technician (inspector). The inspector will inspect the stub to determine whether the storm drainage pipe can be re-used. If the inspector determines that the storm drainage pipe cannot be re-used, the property owner shall either abandon the storm drainage pipe or upgrade the portion of storm drainage pipe on private property through a storm drainage permit or through a storm system extension agreement. The City will be responsible for repair or replacement of the portion of the storm drainage pipe located within public rights-of-way and public easements.

When a property is redeveloped, the property owner shall abandon storm drainage pipes that are no longer needed. In addition, the property owner shall abandon all unused provisional storm drainage pipes within the scope of the redevelopment project. The allowable methods of storm drainage pipe abandonment are as follows:

- Cap the storm drainage pipe at the main.
- Install a cured-in-place liner inside the storm drainage pipe and fill storm drainage pipe pipe to be abandoned with controlled density fill. In addition, install a cured-in-place spot repair liner in the mainline to cover the storm drainage pipe opening. The spot repair liner shall extend minimum of one foot upstream and downstream of the edge of the storm drainage pipe opening.
- Other trenchless technology proposed by the property owner, subject to City review and approval.
- For single-family sites, the City may allow the property owner to cap the storm drainage pipe at the edge of right-of-way. To be approved on a case by case basis.

The Contractor shall completely fill the pipeline to be abandoned with sand, concrete, or controlled density fill; or remove it.

D8-08.2 Abandoning Structures

Abandonment of structures shall be completed only after piped systems have been properly abandoned. Structures within the public right -of-way, a public easement or which is part of the publicly-owned and maintained system must be:

- Removed completely according to Section 2-02 of the current Standard Specifications; or,
- Abandoned according to Section 7-05.3 of the current Standard Specifications,

provided no conflicts with new utilities or improvements arise.

D8-08.3 Demolition or Removal of Structures

Any property owner who plans to demolish or remove any structure connected to the public drainage system shall:

A. Notify the Utility and complete a utility abandonment form prior to commencement of such work; and

B. Verify the location of the existing on-site drainage facilities; and

C. Cap, as necessary, connections that are no longer needed.

D8-09 TESTING OF GRAVITY STORM DRAINS

Methods of testing gravity storm drains shall be at the option of the Contractor unless otherwise specified herein.

D8-09.1 Water Test

Tests for water tightness shall be made by the Contractor in the presence of the Engineer. A test shall be made every section of the storm drain, including the side storm, after completion of backfill. Where the groundwater table is so high as to preclude a proper exfiltration test, an infiltration test may be used.

The exfiltration test shall be made by plugging the inlets of the lower manhole and filling the test section with water to a height of six (6) feet above the crown of the storm drain at the upper end of the storm drain being tested.

In no case shall the static level be less than six (6) feet above the water table at the upper end of the storm drain being tested. Where the static pressure on the lower manhole would exceed 20 feet, the Contractor may test the storm drain between manholes in two or more sections. The Contractor may provide for sectional testing by installing tees in the main line. The tees shall be of a type that permit plugging of both the upper and lower run of the tee. The required static water head may be obtained by installing vertical lengths of pipe in the tee or from the upper end of the storm drain pipe being tested at shallow catch basins.

The Contractor shall provide a groundwater observation well at each manhole for determining the level of the groundwater during the test. The observation well shall consist of one inch plastic pipe installed vertically adjacent to the manhole. The lower end of the test well shall be placed in a one (1) cubic yard pocket of washed gravel and shall be at the same elevation as the invert of the manhole. The upper end of the test well shall be a maximum of two (2) feet below the finished grade elevation and shall be plugged and exposed until completion of the test. The time of exfiltration tests shall be a minimum of one (1) hour. The leakage during the test shall not exceed the following allowances:

Allowable Leakage - Exfiltration or Infiltration

Allowable Leakage in gal\100 linear feet\hr. Head above Crown on Lower End of Test Section.

Table 8-09.1

Pipe	6 Ft.	8 Ft.	10 Ft.	12 Ft.	14 Ft.	16 Ft.
6	0.6	0.7	0.7	0.8	0.8	0.9
8	0.8	0.9	1.0	1.0	1.1	1.2
10	1.0	1.1	1.2	1.3	1.4	1.5
12	1.2	1.3	1.4	1.6	1.7	1.8
15	1.5	1.7	1.8	2.0	2.1	2.3
18	1.8	2.0	2.2	2.3	2.5	2.7
24	2.4	2.6	2.9	3.1	3.4	3.6

Repair by chemical grouting will not be allowed.

For static head above the basic eight feet at the crown of the storm drain at the lower end of the test section, the allowable leakage shown above shall be increased at a ratio of 5 percent per foot increase.

Where the groundwater exceeds a height of six feet above the crown of the storm drain at the upper end of the test section, the section shall be tested by infiltration. The infiltration test shall be conducted by placing a plug in the inlet storm drain at the upper manhole and inserting an approved measuring device in the inlet storm drain at the lower manhole. Prior to making measurements, care shall be taken to assure that the flow over or through the measuring device is constant. A minimum of four measurements shall be made over a period of one hour.

The acceptance water test shall be made after backfilling has been completed and compacted, and ATB has been placed in areas to be paved.

D8-09.2 Air Testing

The Contractor may use a low-pressure air test at his option. The following procedures shall be used on conducting the low-pressure air test. The Contractor shall furnish all facilities and personnel for conducting the test under the observation of the Engineer. The equipment and personnel shall be subject to the approval of the Engineer.

The Contractor may desire to make an air test prior to backfilling for his own purposes. However, the acceptance air test shall be made after backfilling has been completed and compacted, and ATB has been placed in areas to be paved.

All wyes, tees, or end of side storm drain stubs shall be plugged with flexible joint caps, or acceptable alternate, securely fastened to withstand the internal test pressures. Such plugs or caps shall be readily removable and their removal shall provide a socket suitable for making a flexible jointed lateral connection or extension. No double plugs shall be allowed.

Immediately following the pipe cleaning, the pipe installation shall be tested with low-pressure air. Air shall be slowly supplied to the plugged pipe installation until the internal air pressure reaches 4.0 pounds per square inch greater than the average back pressure of any groundwater that may submerge the pipe. At least two minutes shall be allowed for temperature stabilization before proceeding further.

The requirements of this specification shall be considered satisfied if the time required in seconds for the pressure to decrease from 3.5 to 2.5 pounds per square inch greater than the average back pressure of any groundwater is at least as follows:

Table 8-09.2

Size of Pipe	Seconds per Lineal foot of Pipe
4 inch	0.11
6 inch	0.25
8 inch	0.46
10 inch	0.72
12 inch	1.04
15 inch	1.63
18 inch	2.35
21 inch	3.20
24 inch	4.18

The use of air pressure for testing storm drain lines creates hazards that must be recognized. The Contractor shall be certain that all plugs are securely blocked to prevent blowouts. An air supply regulator shall be installed on the air supply line to the storm drain that shall permit a maximum

of 10 psi in the line to be tested. All pressure shall be relieved from the storm section being tested prior to removal of test plugs.

D8-9.3 Deflection Test for Flexible Pipe

Storm drains constructed of flexible pipe shall be deflection tested not less than 30 days after the trench backfill and compaction has been completed, and ATB has been placed in areas to be paved. The test shall be conducted by pulling a solid pointed mandrel with a circular cross section with diameter equal to 95% of the inside pipe diameter through the completed pipeline. Minimum length of circular portion shall be equal to the diameter of the pipe. Pull shall be manual without mechanical assistance and the mandrel shall negotiate deflected section freely. Testing shall be conducted on a manhole to manhole basis and shall be done after the line has been completely flushed out with water. Contractor shall locate and repair any sections failing to pass the test, and retest the section.

D8-10 TELEVISION INSPECTION

The Developer shall provide the Utility with a videotape inspection of all storm drains prior to final project acceptance require that the Developer provide videotape inspection of any or all storm drains before expiration of the warranty. The Contractor shall correct all deficiencies found during television inspection. Maximum allowable ponding depth detected by video inspection shall be 0.5 inches.

D8-11 TESTING OF CONCRETE STRUCTURES

Following backfilling, concrete structures shall be vacuum tested per ASTM C1244, except as specified otherwise herein to ensure that the structure is watertight:

At least twenty-five percent (25%) of the total storm drainage manholes, catch basins and other structures shall be vacuum tested. Structures to be tested shall be selected by the Engineer at the time of testing. No advance notice will be provided to the Contractor as to which structures will be tested. If more than ten percent (10%) of the structures tested fail the initial test, an additional twenty-five percent (25%) of the total structures shall be tested. This process shall continue until a series of structures (25% of the total) successfully tests with no more than 10% initial failure or until all stuctures have been tested. Additional vacuum testing for specific structures in areas susceptible to infiltration shall be required and does not count toward the required 25%.

The Contractor shall furnish all equipment and labor required, including necessary piping/hoses, pneumatic plugs, test vacuum equipment (vacuum pump and vacuum plate/head), vacuum gauge, and second timer. The vacuum gauge shall have a maximum range of 0-30 inches of mercury (Hg) and the vacuum gauge intervals shall be ½ inch increments.

The vacuum test shall be performed by the Contractor in the presence of City of Bellevue personnel. The Contractor shall furnish test reports of each test to the Engineer.

D8-11.1 Testing

If a coating or lining has been applied to the interior of the manhole, the vacuum test must not be performed until the coating or lining has been cured according to the manufacturer's recommendations. In addition, if it is an existing manhole being tested, it must be structurally sound prior to vacuum testing.

Drop connections shall be installed prior to testing.

The vacuum test shall include testing of the seal between the cast iron frame and the concrete cone, slab or grade rings.

After cleaning the interior surface of the manhole, the Contractor shall place and inflate pneumatic plugs in all the connecting pipes with the exception of storm laterals to isolate the manhole. Complete storm services entering the manhole shall be a part of the manhole vacuum test.

The vacuum plate/head shall be placed on top of the manhole lid frame. The vacuum pump shall be connected to the outlet port with the valve open. When a vacuum of ten (10) inches of mercury has been attained, the outlet valve shall be closed and the test period is started. The minimum test period is determined from the following table:

Table 8-11.1

Depth of Manhole	**Time (Seconds)**		
(Feet)	**48 Inch Dia.**	**60 Inch Dia.**	**72 Inch Dia.**
4	10	13	16
8	20	26	33
12	30	39	49
16	40	52	67
20	50	65	81
24	59	78	97
26	64	85	105
28	69	91	113
30	74	98	121
Add for each additional 2 feet of depth:	5	6.66	8

Measurements taken from ASTM C1244

All pneumatic plugs shall be removed from the manhole after the test.

D8-11.2 Failure

Any manhole that fails the initial vacuum test must be repaired with an approved non-shrink grout on the interior and exterior of the manhole. Any repair between the pipes and manhole (gasket waterstop area) requires the removal of the pipe by means of coring and the installation of a new pipe with waterstop (grouting the annular opening). Upon completion of the repairs, the manhole shall be retested as described in the above test procedures.

Any manhole that fails the second vacuum test must be removed and replaced with a new manhole. The new manhole shall not be backfilled until it has been tested and passed the above test procedures.

D8-11.3 Acceptance

The manhole shall have passed the vacuum test if the manhole vacuum does not drop below 9-inches of mercury during the minimum specified test period.

D8-12 TRENCHLESS CONSTRUCTION

The use of trenchless construction methods such as pipe bursting and horizontal directional drilling shall be considered by the City on a case-by-case basis under the following conditions:

A. HDPE DR 26 or thicker-walled pipe required.

B. Romac 501 transition couplings (4") are required at both ends.

C. The installed pipe must be electronically located and marked on the ground for measurement in order to draw the as-built schematics.

D. The pipe must be video-taped following installation, with water running. The tape must be provided to the Inspector to approve the installation or require corrections.

E. Pipe bursting is not allowed on private property or Right-of-Way without the appropriate permission, such as an easement or Right-of-Way use permit.

D8-13 TRENCH EXCAVATION

Before commencement of trenching, provide mini-gabions for all downhill storm drain catch basins, per City of Bellevue Standards for temporary sediment trap at curb inlet. Plastic sheeting must be available on-site. In case of rain, any stockpiled material must be covered and secured.

Clearing and grubbing limits may be established by the Engineer for certain areas and the Contractor shall confine his operations within those limits. Debris resulting from the clearing and grubbing shall be disposed of by the Contractor.

Trenches shall be excavated to the line and grade designated by the Engineer and in accordance with the Standard Details. Trenches shall comply with OSHA and WISHA requirements regarding worker safety. The trench width at the top of the pipe shall be 30 inches for pipe up to and including 12 inch inside diameter and the outside diameter of the pipe barrel plus 16 inches for pipe larger than 12 inch inside diameter. Where higher strength pipe or special bedding is required because of excess trench width, it shall be furnished.

The trench shall be kept free from water until joining has been completed. Surface water shall be diverted so as not to enter the trench. The Contractor shall maintain sufficient pumping equipment on the job to insure that these provisions are carried out. The Contractor shall perform all excavation of every description and of whatever substance encountered as part of his trench excavation cost. Unsuitable material below the depth of the bedding shall be removed and replaced with satisfactory materials as determined by the Engineer.

Trenching operations shall not proceed more than 100 feet in advance of pipe laying except with written approval of the Engineer.

Providing sheeting, shoring, cribbing, cofferdams, and all aspects involved therein shall be the sole responsibility of the Contractor. Such trench/excavation protection shall comply with the requirements of Section 2-09 Structure Excavation and Section 7-08.3(1)B Shoring of the Standard Specifications, Chapter 49.17 RCW of the Washington Safety and Health Act, and Part N – Excavation, Trenching, and Shoring of Chapter 296-155 WAC.

When trenching operations take place in the public right-of-way, the pavement, and all other improvements, shall be restored as required by the Right-Of-Way Use Permit.

END OF CHAPTER D8

CHAPTER D9 – NATURAL SYSTEMS

TABLE OF CONTENTS

D9-01 GENERAL D9-1
D9-02 STREAMS D9-1
D9-03 WETLANDS D9-2

CHAPTER D9 – NATURAL SYSTEMS

D9-01 GENERAL

Over 60 miles of open streams wind through Bellevue and over 800 acres of wetlands have been protected, preserving the City's natural setting in the midst of an urban environment. The beneficial uses of small urban streams and wetlands which the City seeks to preserve are habitat, stormwater conveyance and attenuation, open space and resource preservation, recreation, and aesthetics. Impacts to natural systems (streams, lakes, wetlands, etc.) shall be minimized in order to ensure hydraulic capacity and water quality.

D9-02 STREAMS

When modifications of a stream channel are included as part of a project, such modifications shall not result in reasonably avoidable:

- decreased hydraulic capacity; and
- damage to existing drainage courses, drainage facilities, streams, and surface waters by erosion, siltation or sedimentation; and
- water quality degradation; and
- increases in downstream water velocity; and
- deterioration of ground water resources; and
- deterioration of aquatic wildlife habitat;
- all as determined by the City.

It is the Developer's responsibility to ensure that all stream work be consistent with the floodplain management policies and regulations and as set forth in the Land Use Code 20.25H, the Storm and Surface Water Utility Code, 24.06, and the Clearing and Grading Code, 23.76.

All stream work shall be consistent with the requirements of any public agencies other than the City (such as the Washington State Department of Fish & Wildlife, the Washington State Department of Ecology, and/or the Army Corps of Engineers). It shall be the responsibility of the Developer to comply with any other agency's requirements.

Where fish bearing streams are rehabilitated as part of the project, such rehabilitation shall be designed and constructed so as to provide diversified habitats for a variety of stream organisms considering the following:

- Sufficient water depth to support fish and other aquatic life during low flows;
- Diversity of water velocities through the use of pools and riffles;
- A meandering channel to facilitate features mentioned above; and
- Sufficient stream bed gradient to provide proper flow velocities.

D9-03 WETLANDS

Discharges to wetlands shall maintain the hydrologic conditions, hydrophytic vegetation, and substrate characteristics necessary to support existing and designated uses. The hydrologic analysis shall use the existing land cover condition to determine the existing hydrologic conditions unless directed otherwise by a regulatory agency with jurisdiction. Stormwater runoff from such discharges shall be limited to: 1) 50 percent of the existing 2-year design storm peak runoff rate for the area tributary to the wetland; 2) a rate as determined by a qualified wetlands biologist to maintain the hydrologic conditions, hydrophytic vegetation, and substrate characteristics as required above; or 3) a rate specified by a resource agency having jurisdiction over the wetlands, that maintains the hydrologic conditions, hydrophytic vegetation, and substrate characteristics required above. Runoff in excess of the specified rate shall be bypassed around the wetland.

A wetland can be considered for hydrologic modification and/or stormwater treatment in accordance with Guide Sheet 1B in Appendix I-D on the *Stormwater Management Manual for Western Washington* (2005).

- Stormwater treatment and flow control facilities shall not be built within a natural vegetated buffer, except for:
- necessary conveyance systems as approved by the Permittee; or
- as allowed in wetlands approved for hydrologic modification and/or treatment in accordance with Guidesheet 1B in Appendix I-D of the Stormwater Management Manual for Western Washington (2005).

When stormwater treatment and flow control facilities can be built within a wetland, the facilities must be designed in accordance with other sections in these Standards.

An adopted and implemented basin plan prepared in accordance with the provisions of BCC 24.06.140 may be used to develop requirements for wetlands that are tailored to a specific basin.

When a wetland is allowed to be filled per the Land Use Code, runoff treatment and conveyance equivalent to that provided by the existing wetland to be filled is required in addition to any other runoff treatment required by these standards and applicable codes.

END OF CHAPTER D9

APPENDICES

APPENDIX D-1
STANDARD DETAILS ..... A(D1-1)

APPENDIX D-2
DRAFTING STANDARDS ..... A(D2-1)

APPENDIX D-3
SAMPLE TITLE BLOCK ..... A(D3-1)

APPENDIX D-4
SURFACE WATER APPROVED MATERIALS LIST ..... A(D4-1)

APPENDIX D-5
SURFACE WATER REFERENCE STANDARDS ..... A(D5-1)

APPENDIX D-1

STANDARD DETAILS

DETAIL	NUMBER
CONCRETE INLET	D-1
CATCH BASIN TYPE 1	D-2
CATCH BASIN TYPE 1-L	D-3
CATCH BASIN TYPE 2	D-4
LADDER, STEP, AND TOP SLAB, DETAILS	D-5
VANED GRATE	D-6
PARKING LOT/AREA GRATE	D-7
SOLID COVER	D-8
STANDARD FRAME INSTALLATION	D-9
THROUGH-CURB INLET FRAME	D-10
THROUGH-CURB INLET FRAME INSTALLATION	D-11
FRAME & GRATE FOR EXISTING ROLLED CURB	D-12
EXISTING ROLLED CURB FRAME & GRATE INSTALLATION	D-13
GRATE FOR EXISTING ROLLED CURB INSTALLATION	D-14
CONVERSION RISER FOR CATCH BASIN TYPE 1-L	D-15
AREA INLET	D-16
MANHOLE TYPE 1	D-17
MANHOLE TYPE 2	D-18
MANHOLE TYPE 3	D-19
MANHOLE TYPE 4	D-20
24” MANHOLE RING AND COVER	D-21
24” BOLT-LOCKING MANHOLE RING & COVER	D-22
MANHOLE/CATCH BASIN ADJUSTMENT DETAIL	D-23
CORRUGATED METAL MANHOLE	D-24
TYPICAL TRENCH DETAIL	D-25
FLOW CONTROL STRUCTURE	D-26
PIVOTING SHEAR GATE DETAIL	D-27
SCREW-TYPE SHEAR GATE	D-28

SHEAR GATE VALVE VAULT D-29
VALVE BOX AND EXTENSION INSTALLATION D-29A
VALVE OPERATING EXTENSION D-29B
DRY DETENTION POND D-30
WATER QUALITY POND D-30A
DETENTION PIPE D-31
DETENTION VAULT D-32
TAPPING TEES FOR DRAIN PIPE D-33
BEVELED END PIPE SECTION D-34
ROCK-LINED DITCHES D-35
GRASS-LINED DITCH D-36
SIDEWALK DRAIN D-37
ENERGY DISSIPATOR D-38
DEBRIS CAGE D-39
(NOT USED) D-40
(NOT USED) D-41
SPILL CONTROL (SC) SEPARATOR – TYPE 1 ..... D-42
SPILL CONTROL (SC) SEPARATOR – TYPE 2 ..... D-43
SPILL CONTROL (SC) SEPARATOR – TYPE 3 ..... D-43A
DRAINAGE FACILITY MAINTENANCE ACCESS D-44
GATE/BOLLARD PLACEMENT D-45
PIPE BEDDING D-46
RUNOFF TREATMENT VAULT (WET VAULT) D-47
COMBINED VAULT (DETENTION AND RUNOFF TREATMENT) D-48
SUMP WITH RISER PIPE D-49
[D-50 omitted]
TRAFFIC BEARING ACCESS FOR CORRUGATED METAL MANHOLE D-51
CLEAN OUT TO GRADE D-52
TRASH RACK/DEBRIS BARRIER D-53
SOIL/CEMENT PIPE ANCHORS D-54
[D-55 omitted]
CASING INSTALLATION D-56
PIPE STAKE ANCHOR ASSEMBLY D-57

DRIVEWAY CULVERT D-58
ROCK PROTECTION OUTFALL D-59
BIRD CAGE TRASH RACK STRUCTURE D-60
AMENDED SOILS NDP-1
BIORETENTION CELL NDP-2
BIORETENTION SWALE NDP-3
BIORETENTION PLANTER – FLOW-THROUGH NDP-4
BIORETENTION PLANTER – INFILTRATION NDP-4A
BIORETENTION PLANTER – FLOW-THROUGH WITH OVERFLOW CONNECTED TO STORM SYSTEM NDP-5
BIORETENTION OVERFLOW WITH CONVEYANCE FURROW NDP-6
BIORETENTION OVERFLOW WITH PIPE CULVERT NDP-7
OVERFLOW CONFIGURATIONS FOR BIORETENTION NDP-8
OBSERVATION PORT FOR BIORETENTION NDP-9
DRAIN CURB CUT OPENING FOR BIORETENTION NDP-10
PERVIOUS ASPHALT OR CONCRETE PAVEMENT SECTION NDP-11
PERVIOUS PAVER SYSTEMS NDP-12
PERVIOUS PAVEMENT SIDEWALK IN PLANTING STRIP NDP-13
PERVIOUS PAVEMENT SIDEWALK NDP-14
CHECK DAM AND INTERCEPTOR FOR PERVIOUS PAVEMENT ON SLOPES NDP-15
OBSERVATION PORT FOR PERVIOUS PAVEMENT NDP-16
OBSERVATION PORT COVERS FOR PERVIOUS PAVEMENT NDP-17
RAIN RECYCLING SYSTEM – RAIN BARREL NDP-18
RAIN RECYCLING SYSTEM – CISTERN NDP-19
POP-UP DRAINAGE EMITTER NDP-20
REVERSE SLOPE SIDEWALK NDP-21
ROOF DOWNSPOUT DISPERSAL TRENCH DETAIL NDP-22
ROOF DOWNSPOUT INFILTRATION TRENCH NDP-23
RESIDENTIAL YARD CATCH BASIN NDP-24
RESIDENTIAL ROOF DOWNSPOUT PERFORATED PIPE CONNECTION NDP-25

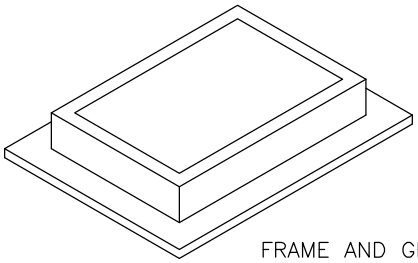

FRAME AND GRATE, SEE APPLICABLE STANDARD DETAILS

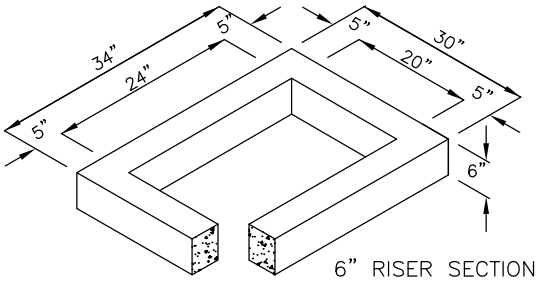

6" RISER SECTION

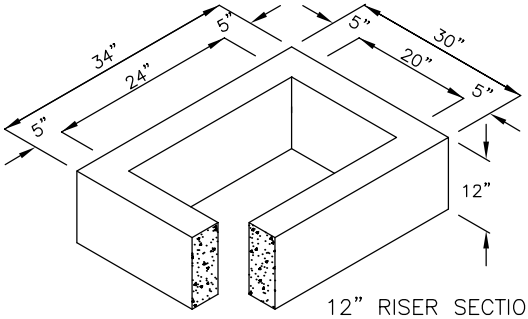

12" RISER SECTION

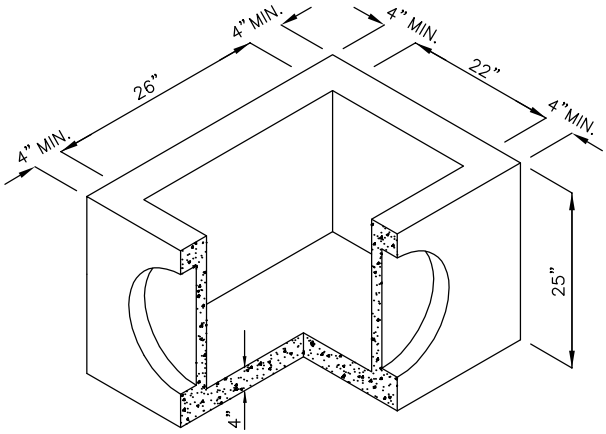

PRECAST BASE SECTION (MEASUREMENT AT THE TOP OF THE BASE)

NOTES:

1. CONCRETE INLET TO BE CONSTRUCTED IN ACCORDANCE WITH ASTM C478 & C890 UNLESS OTHERWISE SHOWN ON PLANS OR NOTED IN THE STANDARD SPECIFICATIONS.
2. AS AN ACCEPTABLE ALTERNATIVE TO REBAR, WELDED WIRE FABRIC HAVING A MIN. AREA OF 0.12 SQUARE INCHES PER FOOT MAY BE USED. WELDED WIRE FABRIC SHALL COMPLY TO ASTM A497. WIRE FABRIC SHALL NOT BE PLACED IN KNOCKOUTS.
3. VERTICAL EDGE OF RISER OR BRICK SHALL NOT BE MORE THAN 2" FROM VERTICAL EDGE OF CONCRETE INLET.
4. PRECAST BASES SHALL BE FURNISHED WITH CUTOUTS OR KNOCKOUTS. KNOCKOUTS SHALL HAVE A WALL THICKNESS OF 2" MIN. ALL PIPE SHALL BE INSTALLED IN FACTORY PROVIDED KNOCKOUTS. UNUSED KNOCKOUTS NEED NOT BE GROUTED IF WALL IS LEFT INTACT.
5. KNOCKOUT OR CUTOUT HOLE SIZE IS EQUAL TO PIPE OUTER DIAM. PLUS CONCRETE INLET WALL THICKNESS.
6. ROUND KNOCKOUTS MAY BE ON ALL 4 SIDES WITH MAX. DIAM. OF 16".
7. THE MAX. DEPTH FROM THE FINISHED GRADE TO THE PIPE INVERT IS 4'-0".
8. THE TAPER ON THE SIDES OF THE PRECAST BASE SECTION AND RISER SECTION SHALL NOT EXCEED 1/2"/FT.
9. CONCRETE INLET FRAME AND GRATES SHALL BE IN ACCORDANCE WITH STANDARD SPECIFICATIONS. MATING SURFACES SHALL BE FINISHED TO ASSURE NON-ROCKING FIT WITH ANY COVER POSITION.
10. APPLY NON-SHRINK GROUT TO INSIDE AND OUTSIDE OF ALL JOINTS, RINGS, RISERS AND FRAMES.

City of Bellevue

STORM AND SURFACE WATER UTILITY

TITLE

CONCRETE INLET

JANUARY 2014

NO SCALE

NO. D-1

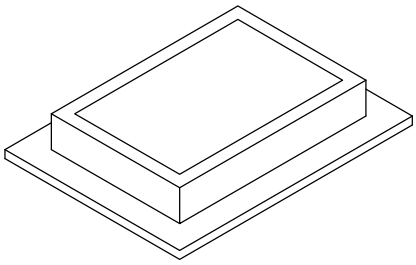

FRAME AND GRATE,
SEE APPLICABLE
STANDARD DETAILS

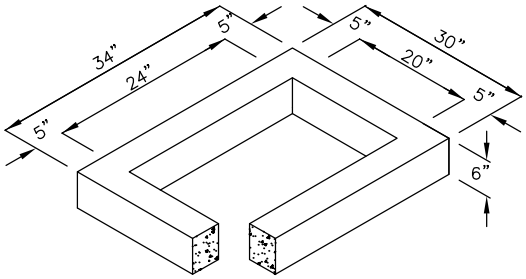

6" RISER SECTION

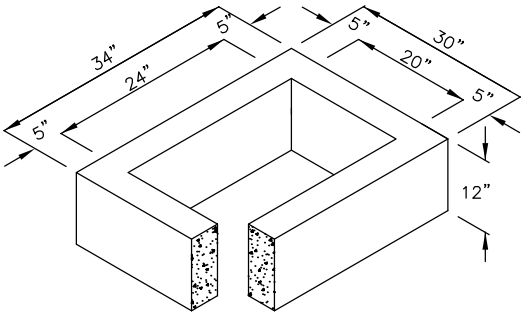

12" RISER SECTION

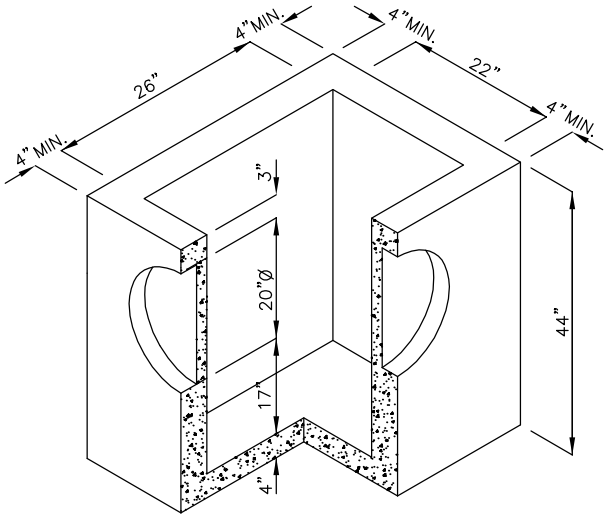

PRECAST BASE SECTION
(MEASUREMENT AT THE
TOP OF THE BASE)

NOTES:

1. CATCH BASINS SHALL BE CONSTRUCTED IN ACCORDANCE WITH ASTM C478 (AASHTO M 199) & C890 UNLESS OTHERWISE SHOWN ON PLANS OR NOTED IN THE STANDARD SPECIFICATIONS.
2. AS AN ACCEPTABLE ALTERNATIVE TO REBAR, WELDED WIRE FABRIC HAVING A MIN. AREA OF 0.12 SQUARE INCHES PER FOOT MAY BE USED. WELDED WIRE FABRIC SHALL COMPLY TO ASTM A497 (AASHTO M 221). WIRE FABRIC SHALL NOT BE PLACED IN KNOCKOUTS.
3. APPLY NON–SHRINK GROUT TO INSIDE AND OUTSIDE OF ALL JOINTS, RINGS, RISERS AND FRAMES.
4. PRECAST BASES SHALL BE FURNISHED WITH CUTOUTS OR KNOCKOUTS. KNOCKOUTS SHALL HAVE A WALL THICKNESS OF 2" MIN. ALL PIPE SHALL BE INSTALLED IN FACTORY PROVIDED KNOCKOUTS. UNUSED KNOCKOUTS NEED NOT BE GROUTED IF WALL IS LEFT INTACT.
5. KNOCKOUT OR CUTOUT HOLE SIZE IS EQUAL TO PIPE OUTER DIAM. PLUS CATCH BASIN WALL THICKNESS.
6. ROUND KNOCKOUTS MAY BE ON ALL 4 SIDES, WITH MAX. DIAM. OF 20". KNOCKOUTS MAY BE EITHER ROUND OR "D" SHAPE.
7. THE MAX. DEPTH FROM THE FINISHED GRADE TO THE PIPE INVERT IS 4'–0".
8. THE TAPER ON THE SIDES OF THE PRECAST BASE SECTION AND RISER SECTION SHALL NOT EXCEED 1/2"/FT.
9. CATCH BASIN FRAME AND GRATE SHALL BE IN ACCORDANCE WITH STANDARD SPECIFICATIONS. MATING SURFACES SHALL BE FINISHED TO ASSURE NON–ROCKING FIT WITH ANY COVER POSITION.
10. VERTICAL EDGE OF RISER OR BRICK SHALL NOT BE MORE THAN 2" FROM VERTICAL EDGE OF CATCH BASIN WALL.

City of Bellevue

STORM AND SURFACE WATER UTILITY

TITLE

CATCH BASIN TYPE I

JANUARY 2014

NO SCALE

NO. D–2

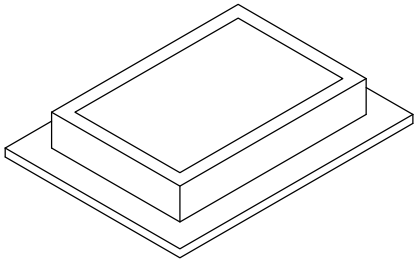

FRAME AND GRATE,
SEE APPLICABLE
STANDARD DETAILS.

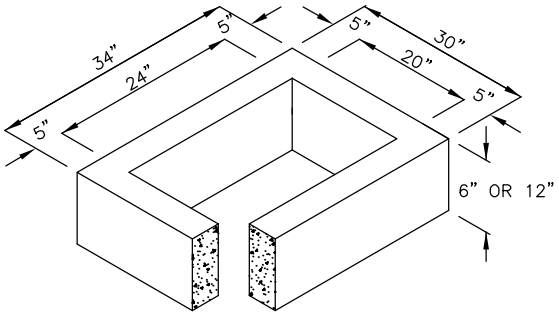

RISER SECTION

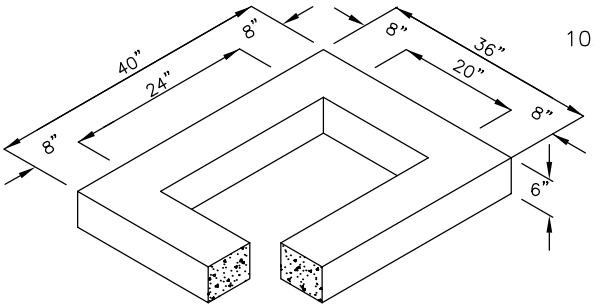

6" REDUCING SECTION

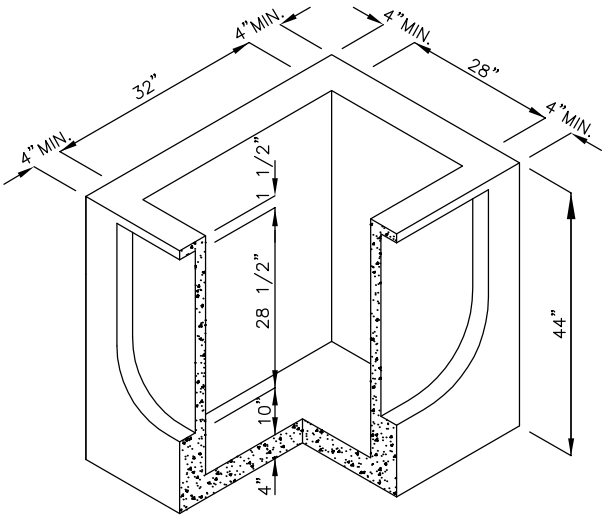

PRECAST BASE SECTION
(MEASUREMENT AT THE
TOP OF THE BASE)

NOTES:

1. CATCH BASINS SHALL BE CONSTRUCTED IN ACCORDANCE WITH ASTM C478 (AASHTO M 199) & C890 UNLESS OTHERWISE SHOWN NO PLANS OR NOTED IN THE STANDARD SPECIFICATIONS.
2. AS AN ACCEPTABLE ALTERNATIVE TO REBAR, WELDED WIRE FABRIC HAVING A MIN. AREA OF 0.12 SQUARE INCHES PER FOOT MAY BE USED. WELDED WIRE FABRIC SHALL COMPLY TO ASTM A497 (AASHTO M 221). WIRE FABRIC SHALL NOT BE PLACED IN KNOCKOUTS.
3. APPLY NON–SHRINK GROUT TO INSIDE AND OUTSIDE OF ALL JOINTS, RINGS, RISERS AND FRAMES.
4. PRECAST BASES SHALL BE FURNISHED WITH CUTOUTS OR KNOCKOUTS. KNOCKOUTS SHALL HAVE A WALL THICKNESS OF 2" MIN. ALL PIPE SHALL BE INSTALLED IN FACTORY PROVIDED KNOCKOUTS. UNUSED KNOCKOUTS NEED NOT BE GROUTED IF WALL IS LEFT INTACT.
5. KNOCKOUT OR CUTOUT HOLE SIZE IS EQUAL TO PIPE OUTER DIAM. PLUS CATCH BASIN WALL THICKNESS.
6. KNOCKOUTS MAY BE ON ALL 4 SIDES WITH MAX. DIAM. OF 28". KNOCKOUTS MAY BE EITHER ROUND OR "D" SHAPE.
7. THE TAPER ON THE SIDES OF THE PRECAST BASE SECTION AND RISER SECTION SHALL NOT EXCEED 1/2"/FT.
8. CATCH BASIN FRAME AND GRATE SHALL BE IN ACCORDANCE WITH STANDARD SPECIFICATIONS. MATING SURFACES SHALL BE FINISHED TO ASSURE NON–ROCKING FIT WITH ANY COVER POSITION.
9. MAX. DEPTH FROM FINISHED GRADE TO PIPE INVERT SHALL BE 5'–0".
10. VERTICAL EDGE OF REDUCING SECTION OR BRICK SHALL NOT BE MORE THAN 2" FROM VERTICAL EDGE OF CATCH BASIN WALL.

City of Bellevue

STORM AND SURFACE WATER UTILITY

TITLE

CATCH BASIN TYPE 1–L

JANUARY 2014

NO SCALE

NO. D–3

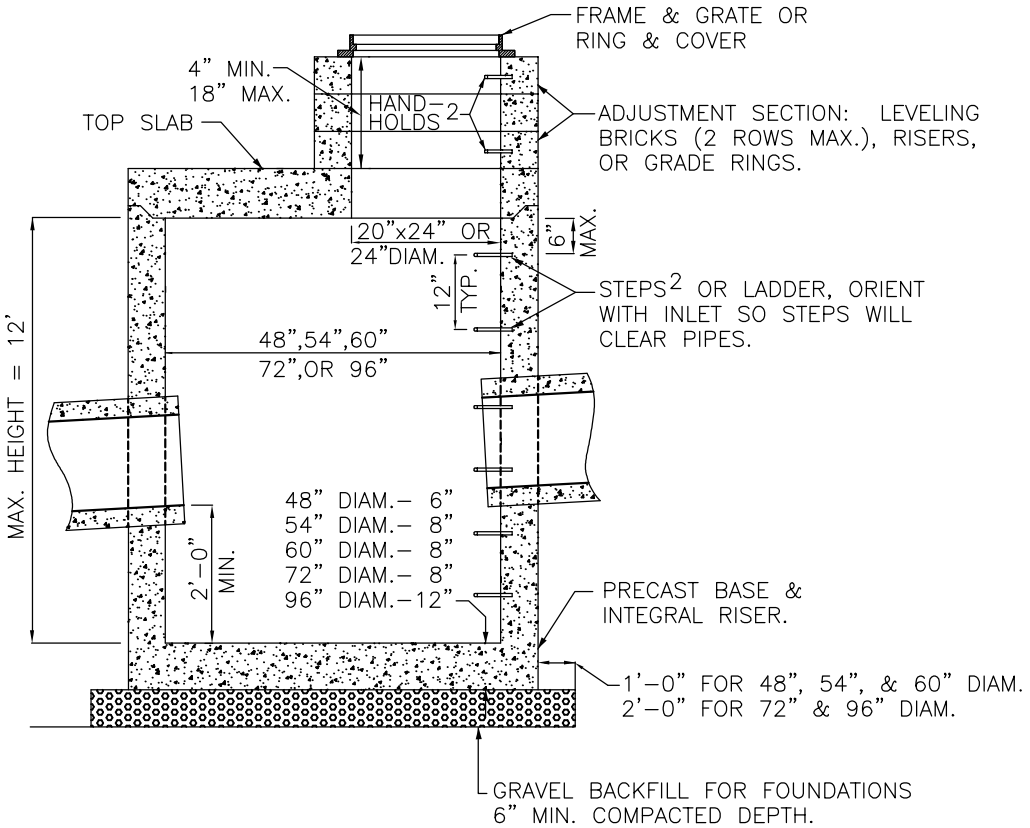

NOTES:

1. CATCH BASINS SHALL BE CONSTRUCTED IN ACCORDANCE WITH ASTM C478 (AASHTO M199) AND ASTM C890 UNLESS OTHERWISE SHOWN ON PLANS OR NOTED IN THE WSDOT STANDARD SPECIFICATIONS.

2. HANDHOLDS IN ADJUSTMENT SECTION SHALL HAVE 3" MIN. CLEARANCE. STEPS IN CATCH BASIN SHALL HAVE 6" MIN. CLEARANCE. SEE STD. DTL. NO D-5, CATCH BASIN DETAILS. HANDHOLDS SHALL BE PLACED IN ALTERNATING GRADE RINGS OR LEVELING BRICK COURSE WITH A MIN. OF ONE HANDHOLD BETWEEN THE LAST STEP AND TOP OF THE FINISHED GRADE.

3. APPLY NON-SHRINK GROUT TO INSIDE AND OUTSIDE OF ALL JOINTS, RINGS, RISERS AND FRAMES. ALL PRECAST CONCRETE SHALL BE CLASS 4000.

4. PRECAST BASES SHALL BE FURNISHED WITH CUTOUTS OR KNOCKOUTS. KNOCKOUTS SHALL HAVE WALL THICKNESS OF 2" MIN. UNUSED KNOCKOUTS NEED NOT BE GROUTED IF WALL IS LEFT INTACT. PIPES SHALL BE INSTALLED ONLY IN FACTORY KNOCKOUTS UNLESS OTHERWISE APPROVED BY THE ENGINEER.

5. KNOCKOUT OR CUTOUT HOLE SIZE SHALL EQUAL PIPE OUTER DIAM. PLUS CATCH BASIN WALL THICKNESS. MAX. HOLE SIZE SHALL BE 36" FOR 48" CATCH BASIN, 42" FOR 54" C.B., 48" FOR 60" C.B., 60" FOR 72" C.B., 84" FOR 96" C.B. MIN. DISTANCE BETWEEN HOLES SHALL BE 8" FOR 48", 54", AND 60" C.B.; 12" FOR 72" AND 96" C.B.

6. CATCH BASIN FRAMES AND GRATES OR COVERS SHALL BE IN ACCORDANCE WITH SEC. 7.05 OF THE STANDARD SPECIFICATIONS. MATING SURFACES SHALL BE FINISHED TO ASSURE NON-ROCKING FIT WITH ANY COVER POSITION.

7. FOR HEIGHTS OF 12' OR LESS, MINIMUM SOIL BEARING VALUE SHALL EAUAL 3,300 POUNDS PER SQUARE FOOT. FOR HEIGHTS OVER 12", MIN. SOIL BEARING VALUE SHALL EQUAL 3,800 POUNDS PER SQUARE FOOT.

8. FOR DETAILS SHOWING LADDER, STEPS, HANDRAILS AND TOP SLABS, SEE STD. DTL. NO. D-5.

9. SEE THE STANDARD SPECIFICATIONS SEC. 7-05.3 FO JOINT REQUIREMENTS.

JANUARY 2014 NO SCALE

City of Bellevue

STORM AND SURFACE WATER UTILITY

TITLE

CATCH BASIN TYPE 2
48", 54", 60", 72", & 96"

NO. D-4

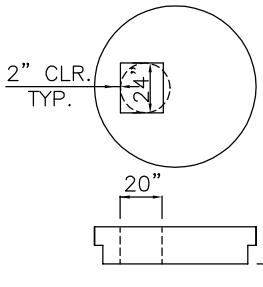

48", 54" & 60" TOP SLAB

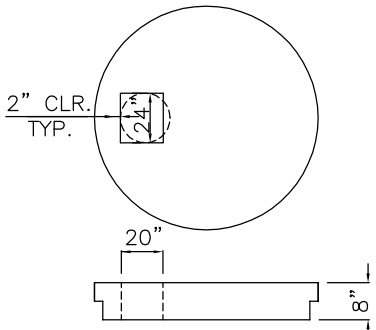

72" TOP SLAB

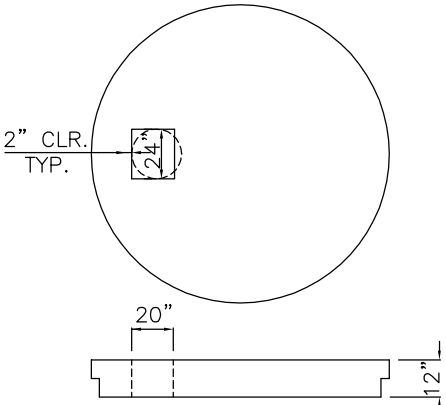

96" TOP SLAB

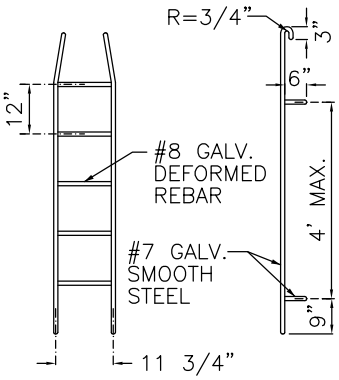

PREFABRICATED LADDER

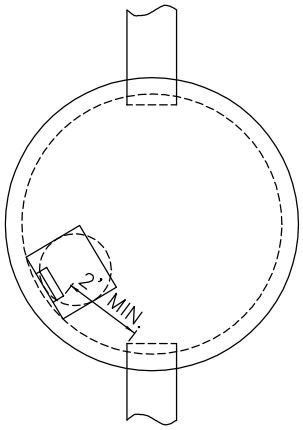

TYPICAL ORIENTATION
FOR ACCESS AND STEPS

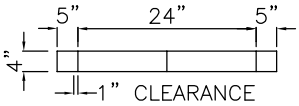

GRADE RING

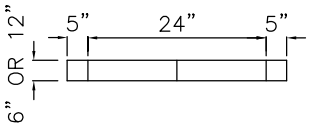

RISER

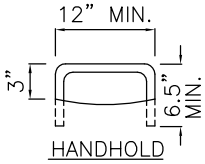

HANDHOLD

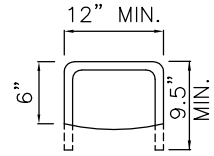

CATCH BASIN STEP

* ALL STEPS & RUNGS #8 GALV. DEFORMED REBAR OR POLYPROPYLENE.

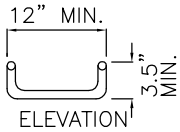

ELEVATION

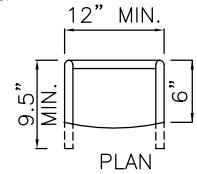

PLAN

DROP RUNG
CATCH BASIN STEP

NOTES:

1. PROPRIETARY CATCH BASIN HANDHOLDS AND STEPS ARE ACCEPTABLE, PROVIDED THAT THEY CONFORM TO SEC. R, ASTM C478, AASHTO M-199 AND MEET ALL WISHA REQUIREMENTS.
2. CATCH BASIN STEP/HANDHOLD LEGS SHALL BE PARALLEL OR APPROXIMATELY RADIAL AT THE OPTION OF THE MANUFACTURER, EXCEPT THAT ALL STEPS IN ANY CATCH BASIN SHALL BE SIMILAR. PENETRATION OF OUTER WALL BY A LEG IS PROHIBITED.
3. HANDHOLDS AND STEPS SHALL HAVE "DROP" RUNGS AS SHOWN ON DETAIL OR PROTUBERANCES TO PREVENT SIDEWAYS SLIP.
4. SLAB OPENING MAY BE 24" X 20" OR 24" DIAM.
5. PLASTIC STEPS SHALL BE POLYPROPYLENE AND CONFORM TO ASTM D-4101 WITH 1/2" ASTM-615 GRADE 60 STEEL REINFORCING BAR. LANE P-13938, M.A. PS2-PF, OR EQUAL.
6. STEPS OF LADDERS OR STEPS SHALL EXTEND TO WITHIN 16" OF BOTTOM OF CATCH BASIN.
7. HANGING LADDERS SHALL BE PERMANENTLY FASTENED AT TOP BY HANGING ON STEP OR BY BOLTING OR EMBEDDING IN CONCRETE. EACH SHALL BE EMBEDDED AT BOTTOM IN BASE.
8. ADDITIONAL SAFETY FEATURES MAY BE REQUIRED IN VERY DEEP OR UNUSUAL STRUCTURES.

City of Bellevue

STORM AND SURFACE WATER UTILITY

TITLE

LADDER, STEP, AND TOP SLAB, DETAILS

JANUARY 2014

NO SCALE

NO. D-5

PLAN

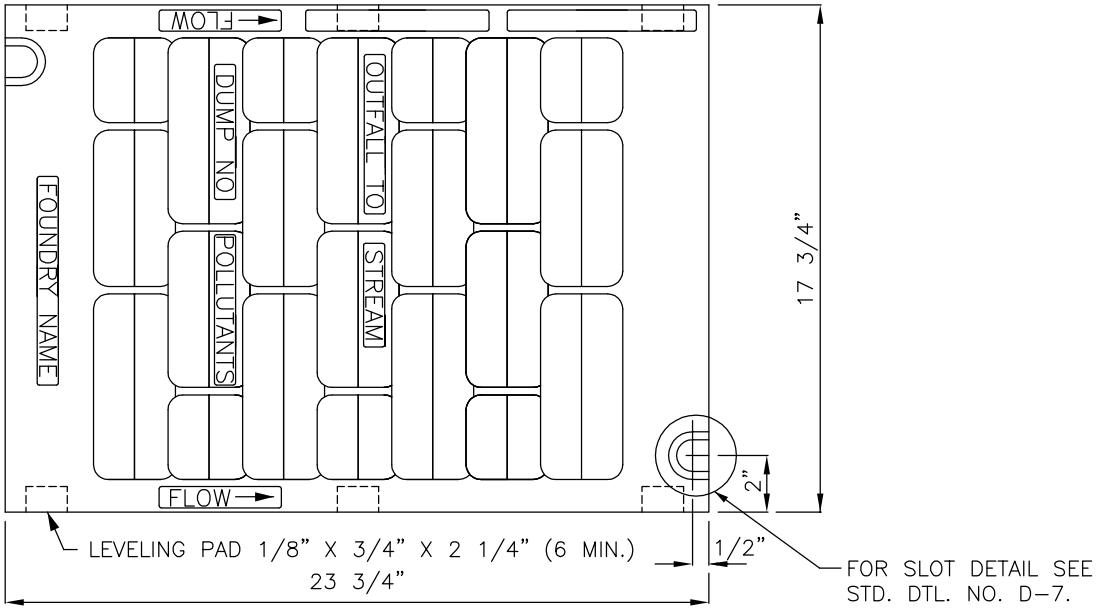

ELEVATION

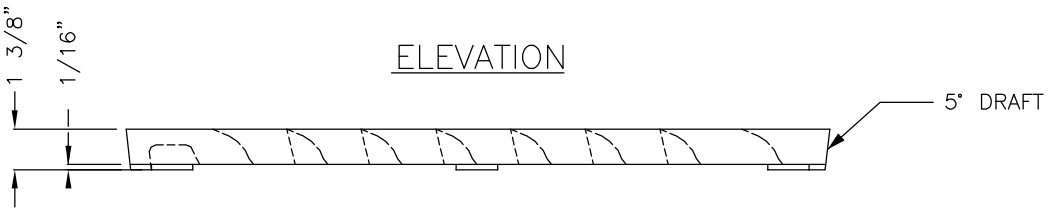

NOTES:

1. USE WITH TWO LOCKING BOLTS 5/8"-11 NC STAINLESS TYPE 304 STEEL SOCKET HEAD (ALLEN HEAD) BOLTS, 2" LONG. NOTE SLOT DETAIL.
2. MATERIAL IS DUCTILE IRON ASTM A536 GRADE 80-55-06.
3. "OUTFALL TO STREAM DUMP NO POLLUTANTS" IN RAISED LETTERS SHALL BE LOCATED ON GRATE AS SHOWN, OR ON BORDER AREA.
4. SHALL CONFORM TO SEC. 7.05 OF THE STANDARD SPECIFICATIONS.
5. WELDING IS NOT PERMITTED.
6. EDGES SHALL HAVE 0.125" RADIUS, 0.125" CHAMBER OR COMPLETE DEBURRING.
7. USE A BI-DIRECTIONAL VANED GRATE IN SAG VERTICAL CURVES.

City of Bellevue

STORM AND SURFACE WATER UTILITY

TITLE

VANED GRATE

JANUARY 2014

NO SCALE

NO. D-6

TOP VIEW

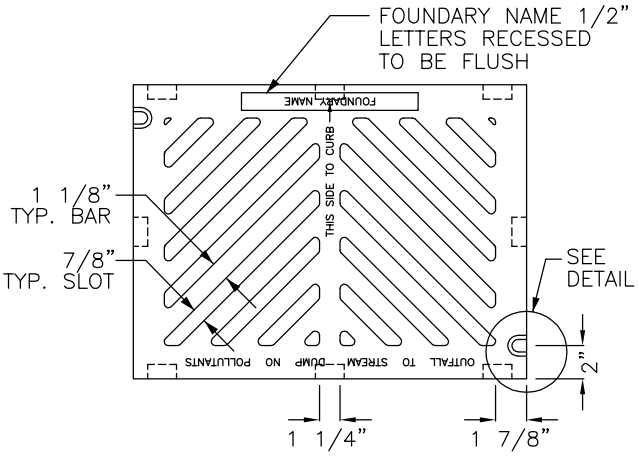

BOTTOM VIEW

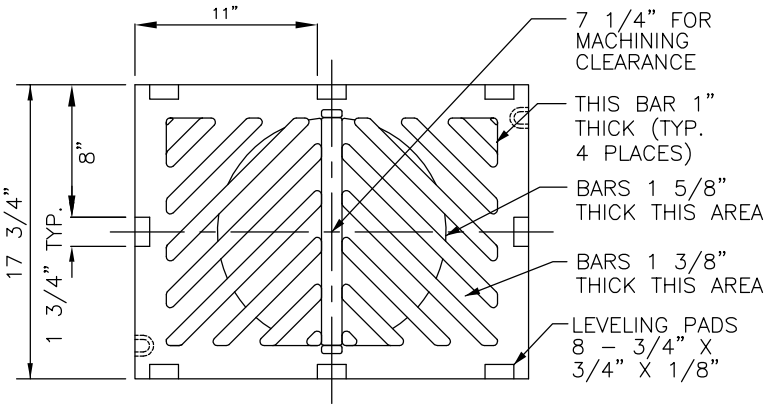

SIDE VIEW

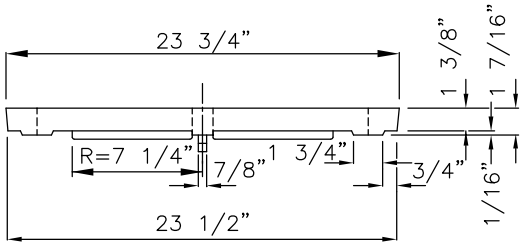

END VIEW

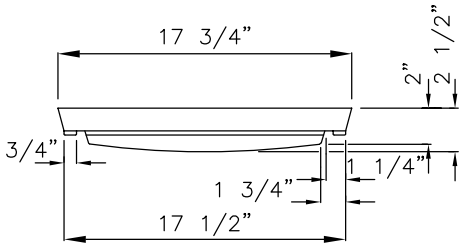

SLOT DETAIL

SEE NOTE 1

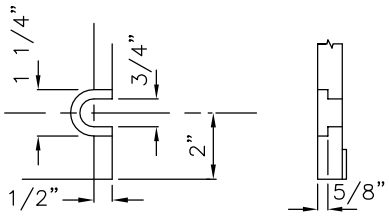

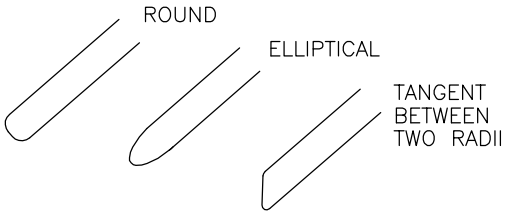

OPTIONAL DESIGN FOR GRATE OPENINGS ENDS

NOTES:

1. SLOT FORMED AND RECESSED FOR 5/8"–11 NC X 2 SOCKET HEAD (ALLEN HEAD) BOLT.
2. GRATE SHALL BE DUCTILE IRON.
3. SHALL CONFORM TO SEC. 9–05.15 OF THE STANDARD SPECIFICATIONS.
4. USE VANED GRATE IN CURB LINE.
5. USE FRAME SHOWN IN STANDARD DETAIL.

City of Bellevue

STORM AND SURFACE WATER UTILITY

TITLE

PARKING LOT/AREA GRATE

JANUARY 2014

NO SCALE

NO. D–7

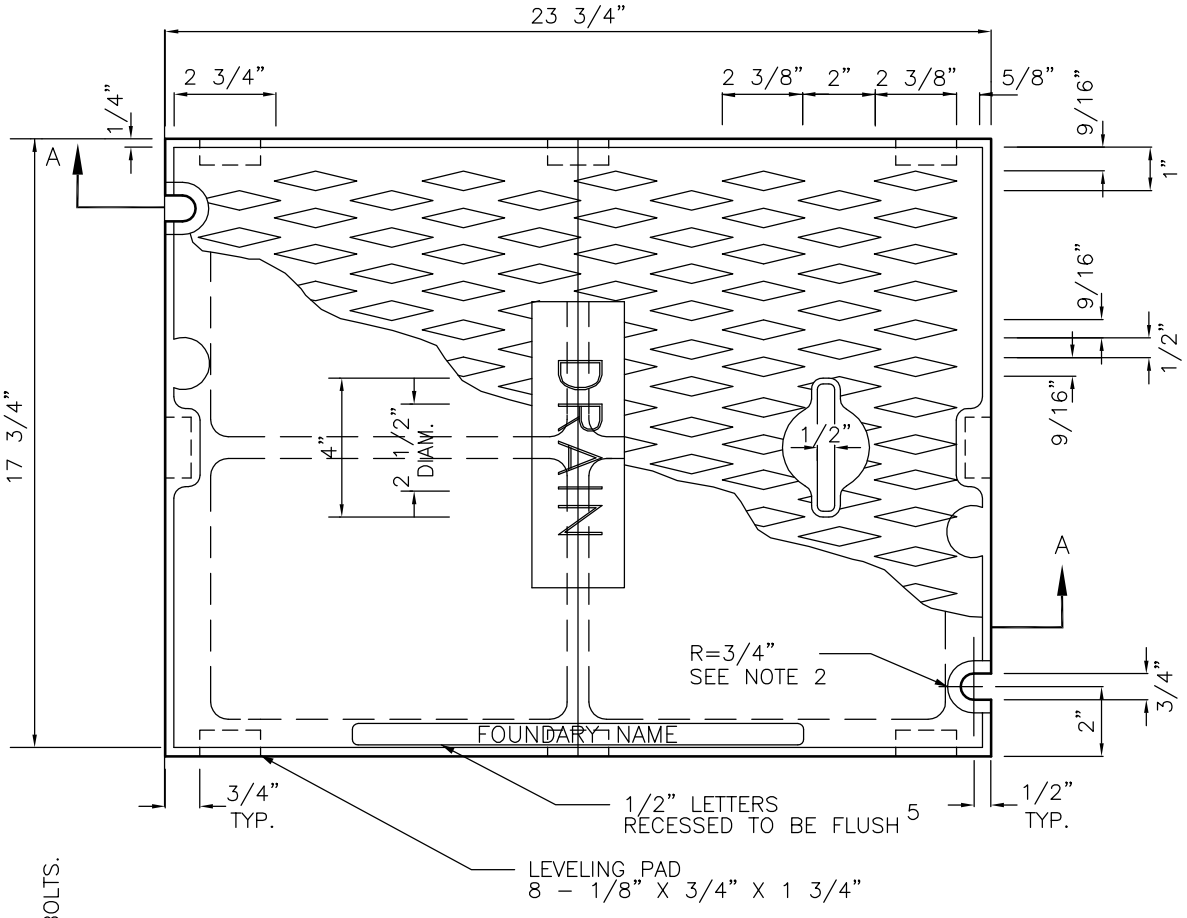

PLAN COVER

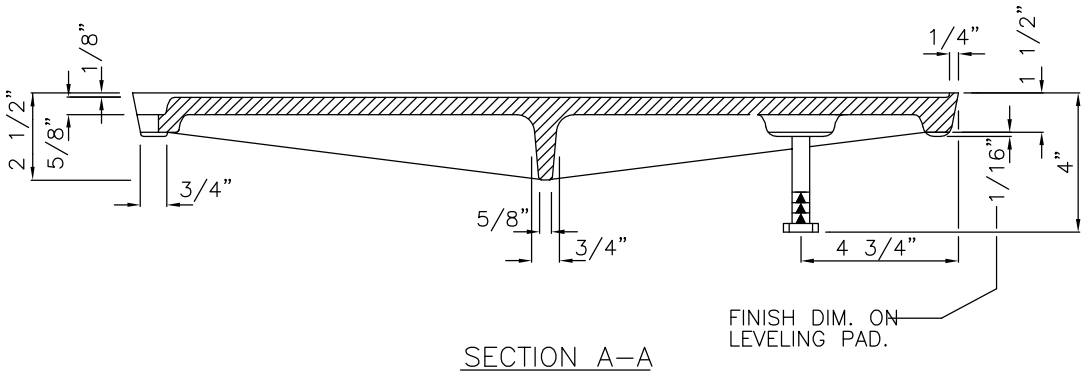

SECTION A–A

NOTES:

1. USE WITH FRAME DRILLED AND TAPPED FOR LOCKING BOLTS.
2. USE WITH TWO LOCKING BOLTS 5/8"–11 NC STAINLESS STEEL TYPE 304 STEEL SOCKET HEAD (ALLEN HEAD) BOLTS, 2" LONG.
3. COVER MATERIAL IS DUCTILE IRON.
4. SHALL CONFORM TO SEC. 7.05 OF THE STANDARD SPECIFICATIONS.
5. COVER SHALL HAVE THE WORD "DRAIN" IN 2–INCH RAISED LETTERS.

4ANUARY 2014 NO SCALE

City of Bellevue

STORM AND SURFACE WATER UTILITY

TITLE

SOLID COVER

NO. D–8

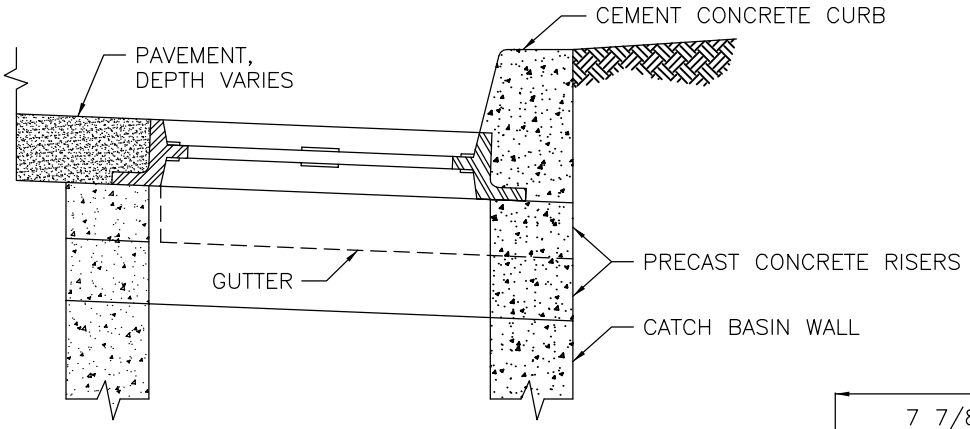

VERTICAL CURB

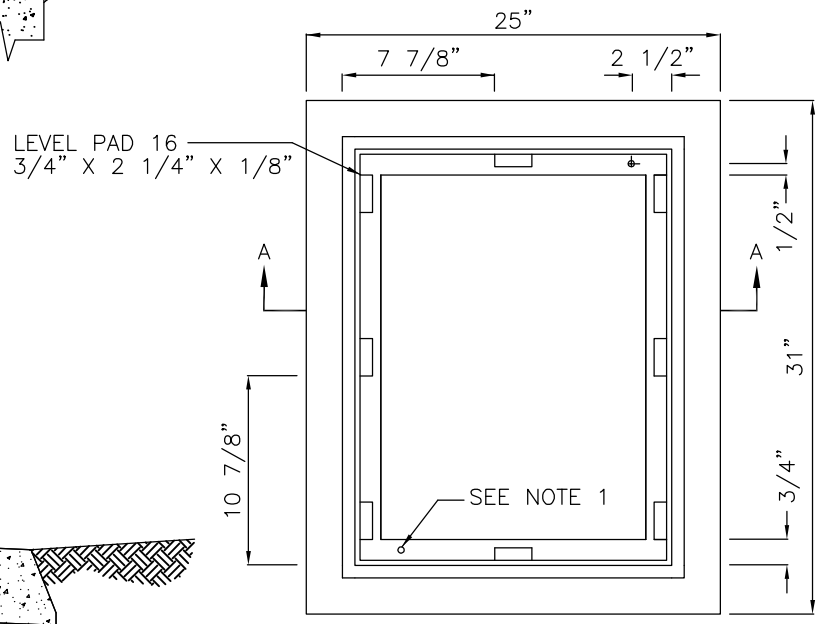

PLAN

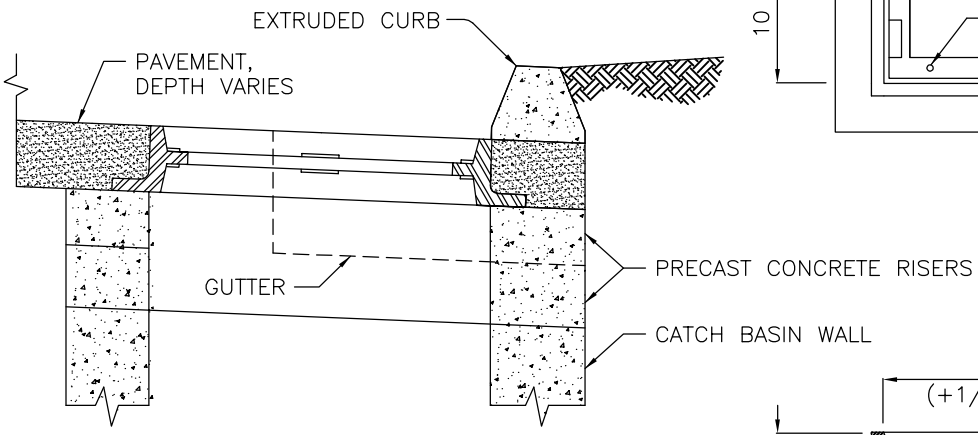

EXTRUDED CURB

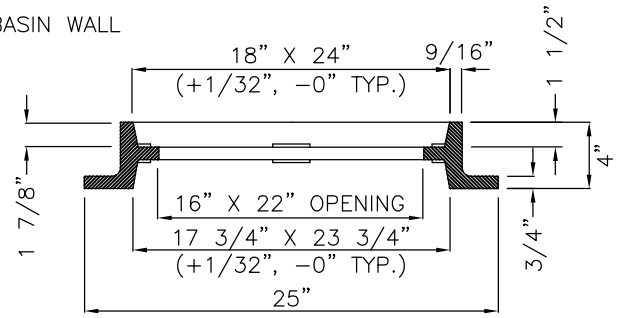

SECTION A–A

NOTES:

1. DRILL AND TAP FOR, AND PROVIDE, TWO LOCKING BOLTS 5/8"–11 NC STAINLESS TYPE 304 STEEL SOCKET HEAD (ALLEN HEAD) BOLTS, 2" LONG.
2. FRAME MATERIAL IS CAST IRON PER ASTM A48 CLASS 30 OR BETTER.
3. SET FRAME TO GRADE AND CONSTRUCT ROAD AND GUTTER TO BE FLUSH WITH FRAME.
4. MATCH CENTERLINE OF CATCH BASIN TO CURB LINE FOR TYPE 1 AND 1–L.

City of Bellevue

STORM AND SURFACE WATER UTILITY

TITLE

STANDARD FRAME INSTALLATION

JANUARY 2014

NO SCALE

NO. D–9

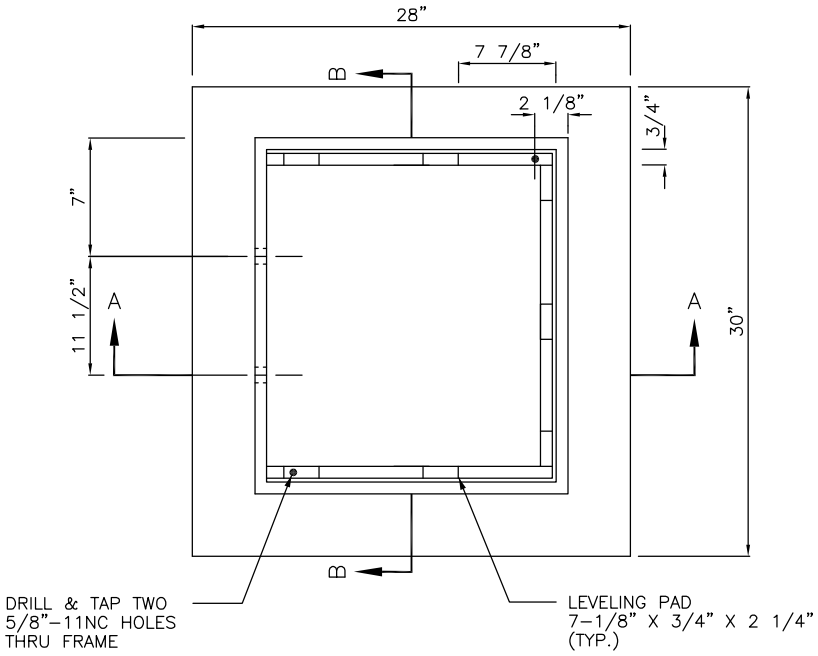

PLAN

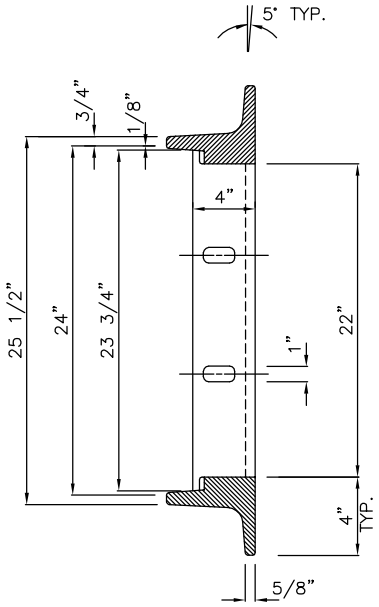

SECTION B–B

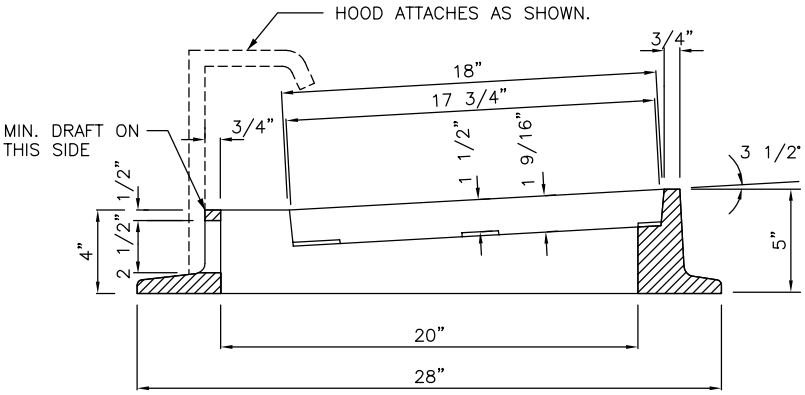

SECTION A–A

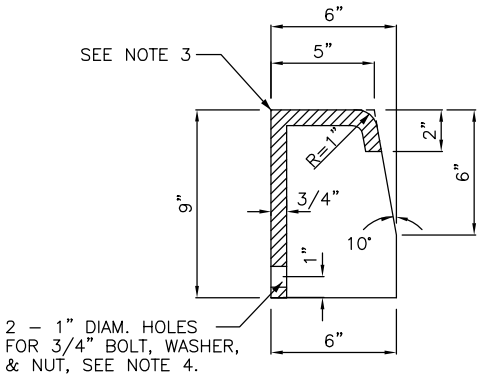

SECTION C–C

NOTES:

1. MATERIAL SHALL CONFORM TO SECTION 9–05.15(2) OF THE STANDARD SPECIFICATIONS.
2. PATTERN ON TOP SURFACE OF HOOD SHALL BE 3/16" NON–SKID DIAMOND.
3. BOLT, WASHER, AND NUT SHALL BE GALVANIZED OR CORROSION RESISTANT.
4. SEE DETAIL D–11 FOR INSTALLATION.

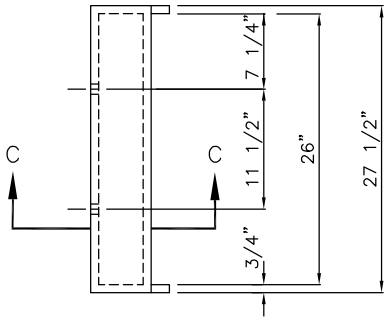

HOOD DETAIL

City of Bellevue

STORM AND SURFACE WATER UTILITY

TITLE

THROUGH–CURB INLET FRAME

NO. D–10

JANUARY 2014

NO SCALE

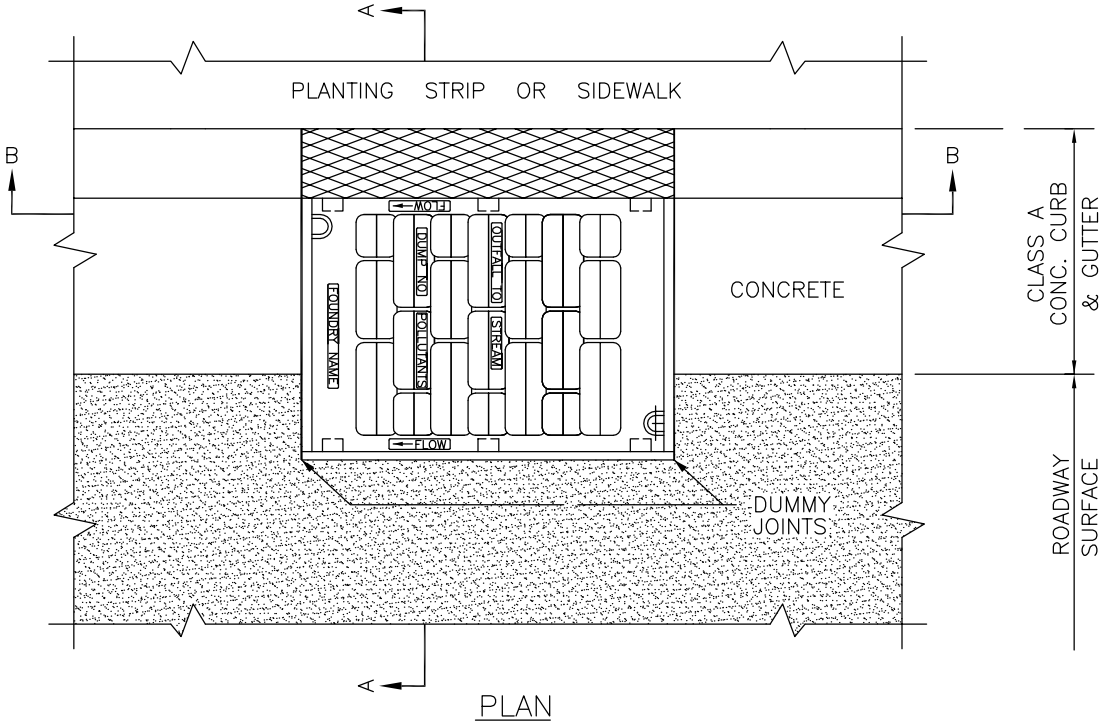

PLAN

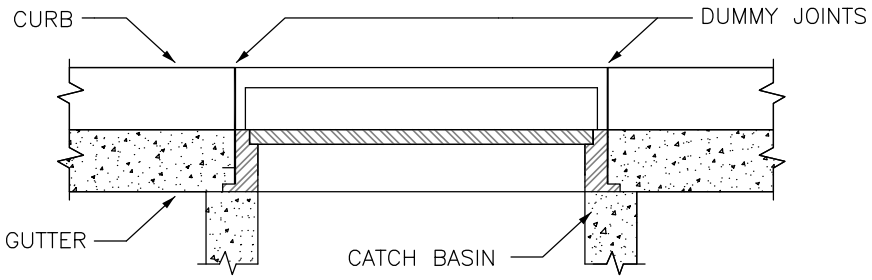

SECTION B–B

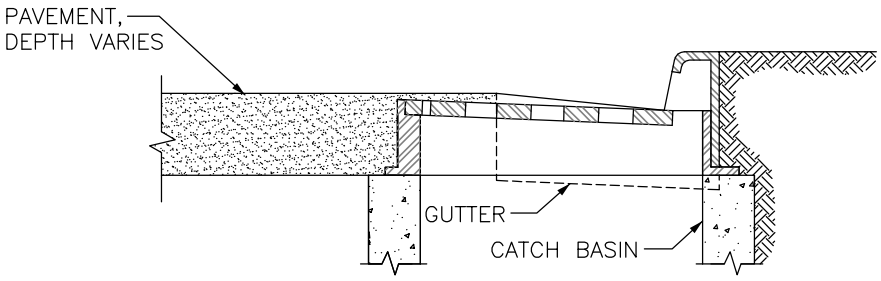

SECTION A–A

NOTES:

1. SET TO GRADE AND CONSTRUCT ROAD AND GUTTER TO BE FLUSH WITH FRAME.
2. HOOD SHALL MATCH TOP OF CURB ELEVATION.

City of Bellevue

STORM AND SURFACE WATER UTILITY

TITLE

THROUGH–CURB INLET FRAME INSTALLATION

JANUARY 2014

NO SCALE

NO. D–11

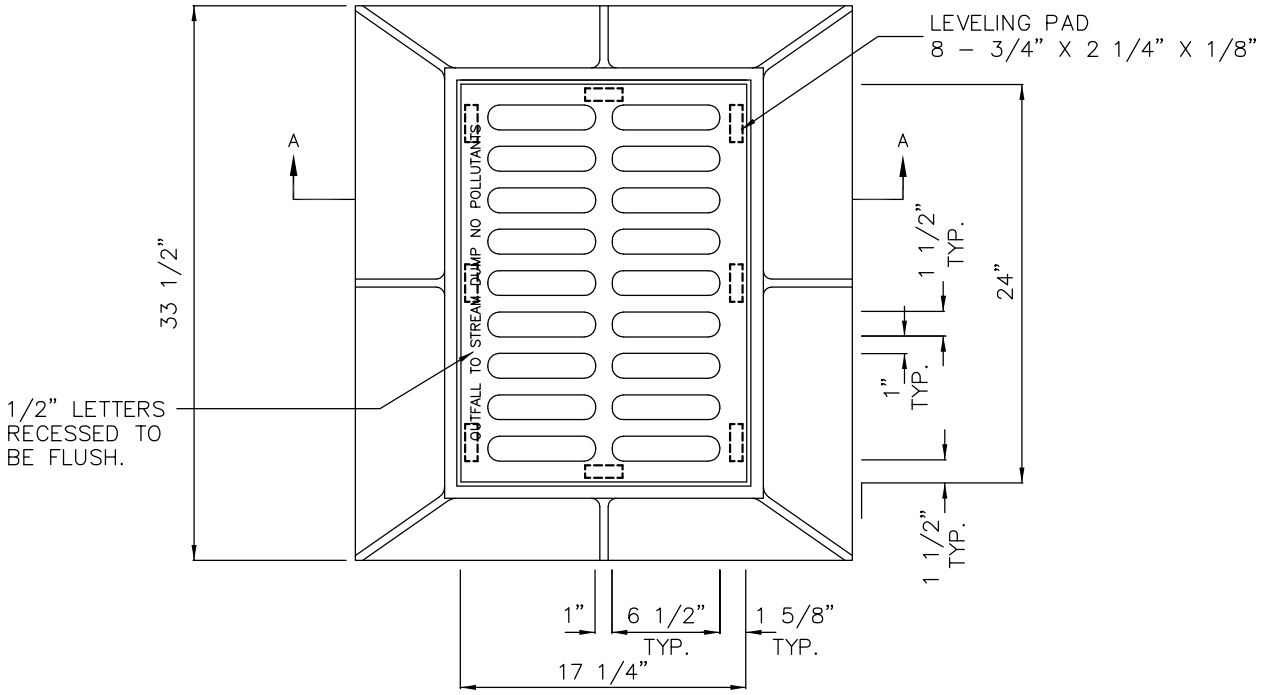

PLAN

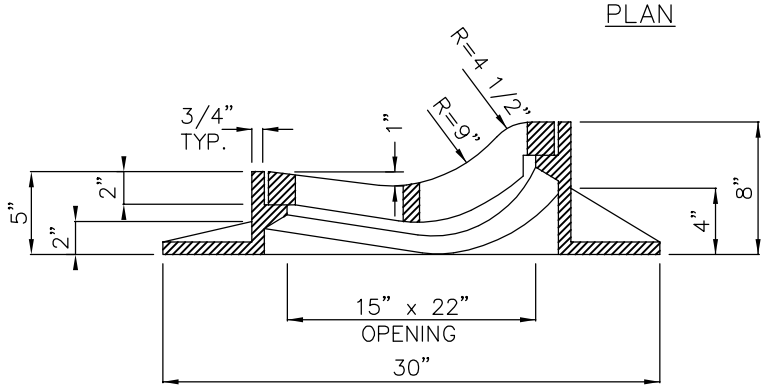

SECTION A–A

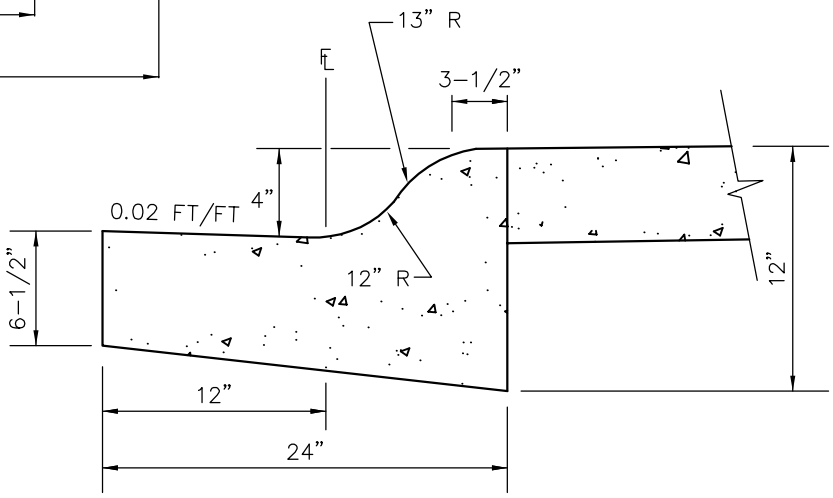

ROLLED CURB

NOTES:

1. FRAME MATERIAL IS CAST IRON ASTM A48 CLASS 30.

City of Bellevue

STORM AND SURFACE WATER UTILITY

TITLE

FRAME & GRATE FOR EXISTING ROLLED CURB

JANUARY 2014

NO SCALE

NO. D–12

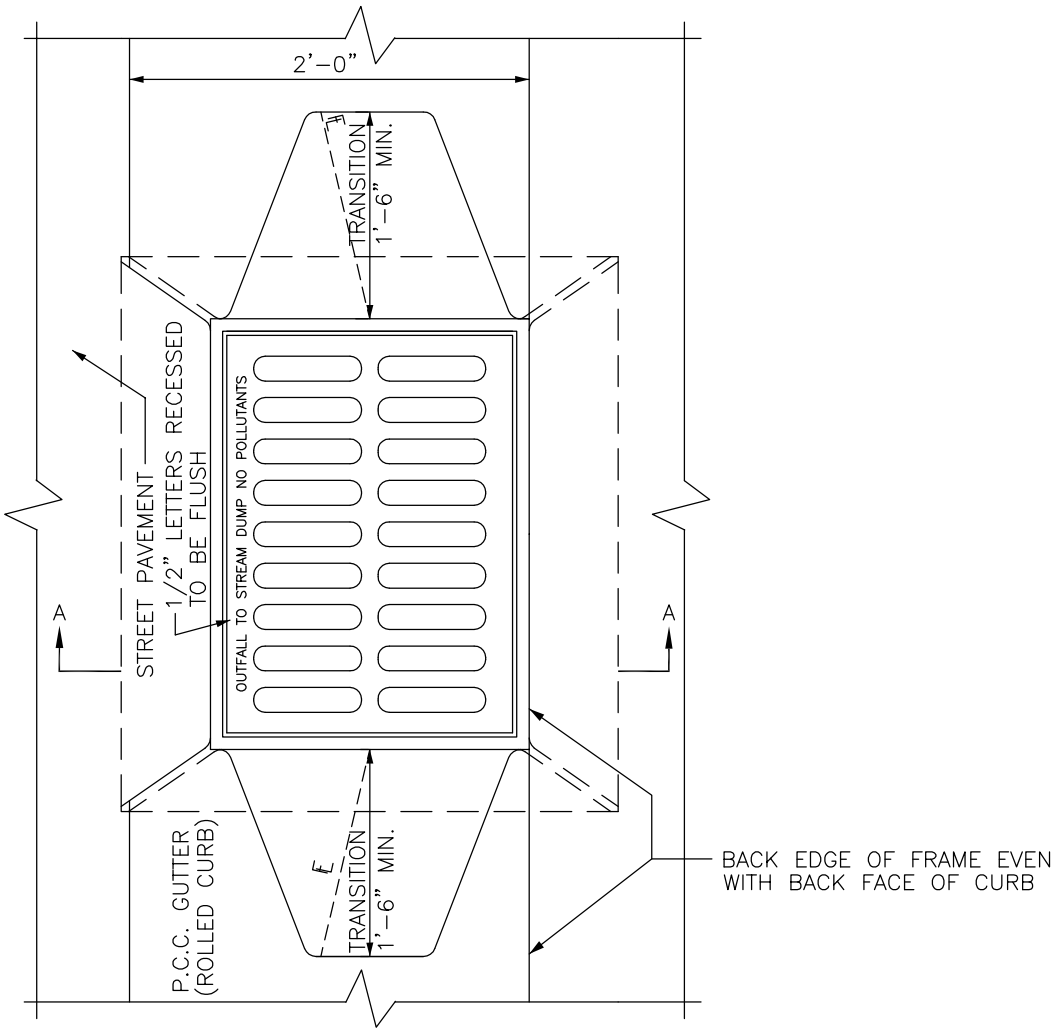

PLAN

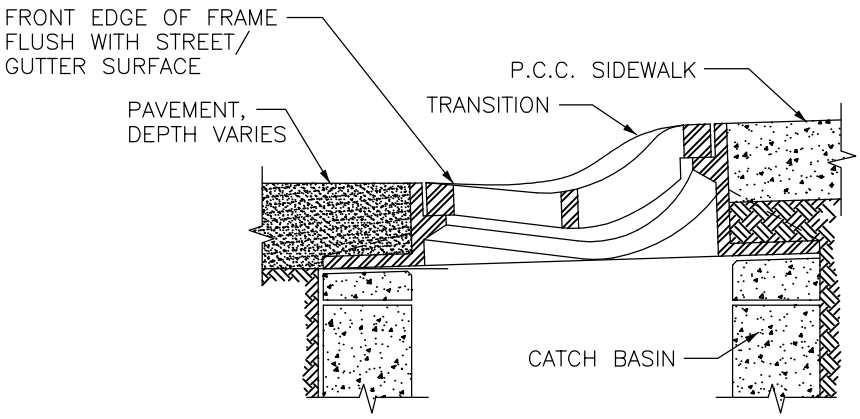

SECTION A–A

NOTES:

1. SET FRAME TO GRADE AND CONSTRUCT ROAD AND CURB TO BE FLUSH AT FRONT AND BACK OF FRAME.

City of Bellevue

STORM AND SURFACE WATER UTILITY

TITLE

EXISTING ROLLED CURB
FRAME & GRATE INSTALLATION

JANUARY 2014

NO SCALE

NO. D–13

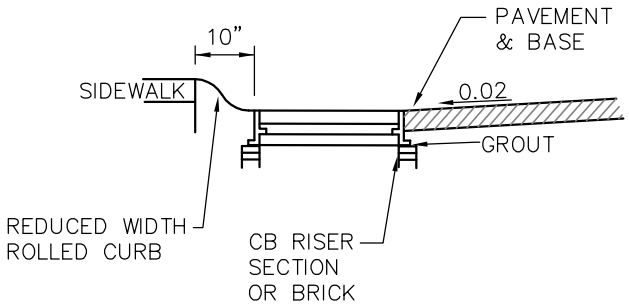

ELEVATION A–A

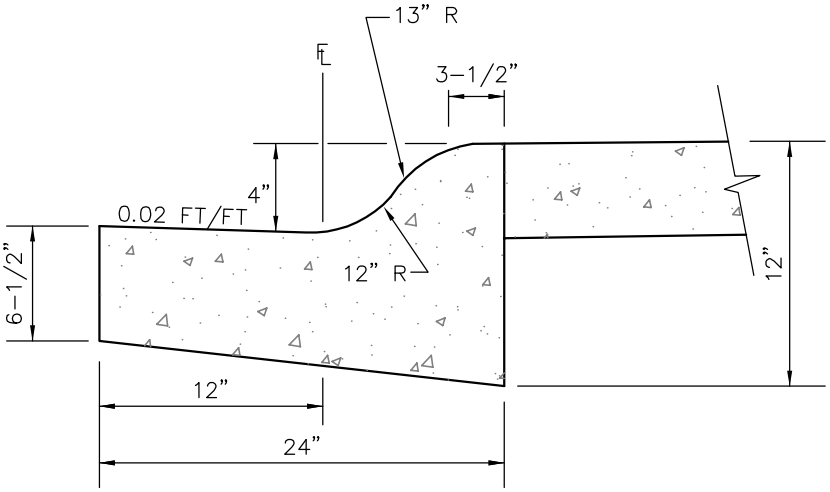

ELEVATION B–B

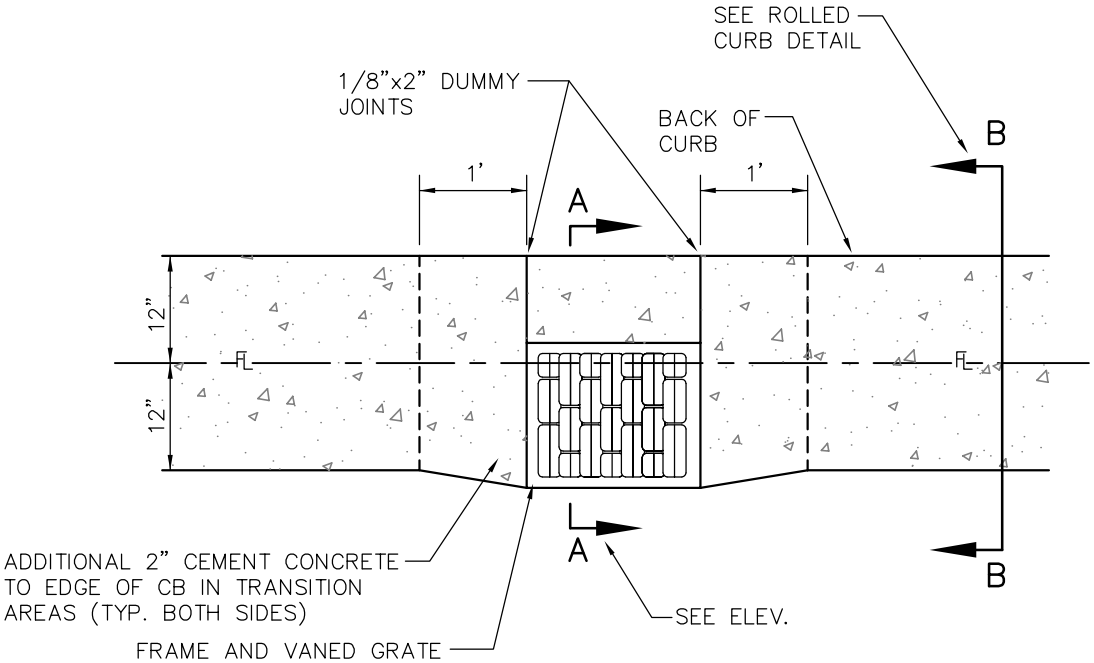

NOTES:

1. WHEN A THRU–CURB INLET IS REQUIRED, USE A ROLLED CURB FRAME AND GRATE.

City of Bellevue

STORM AND SURFACE WATER UTILITY

TITLE

GRATE FOR EXISTING ROLLED CURB INSTALLATION

JANUARY 2014

NO SCALE

NO. D–14

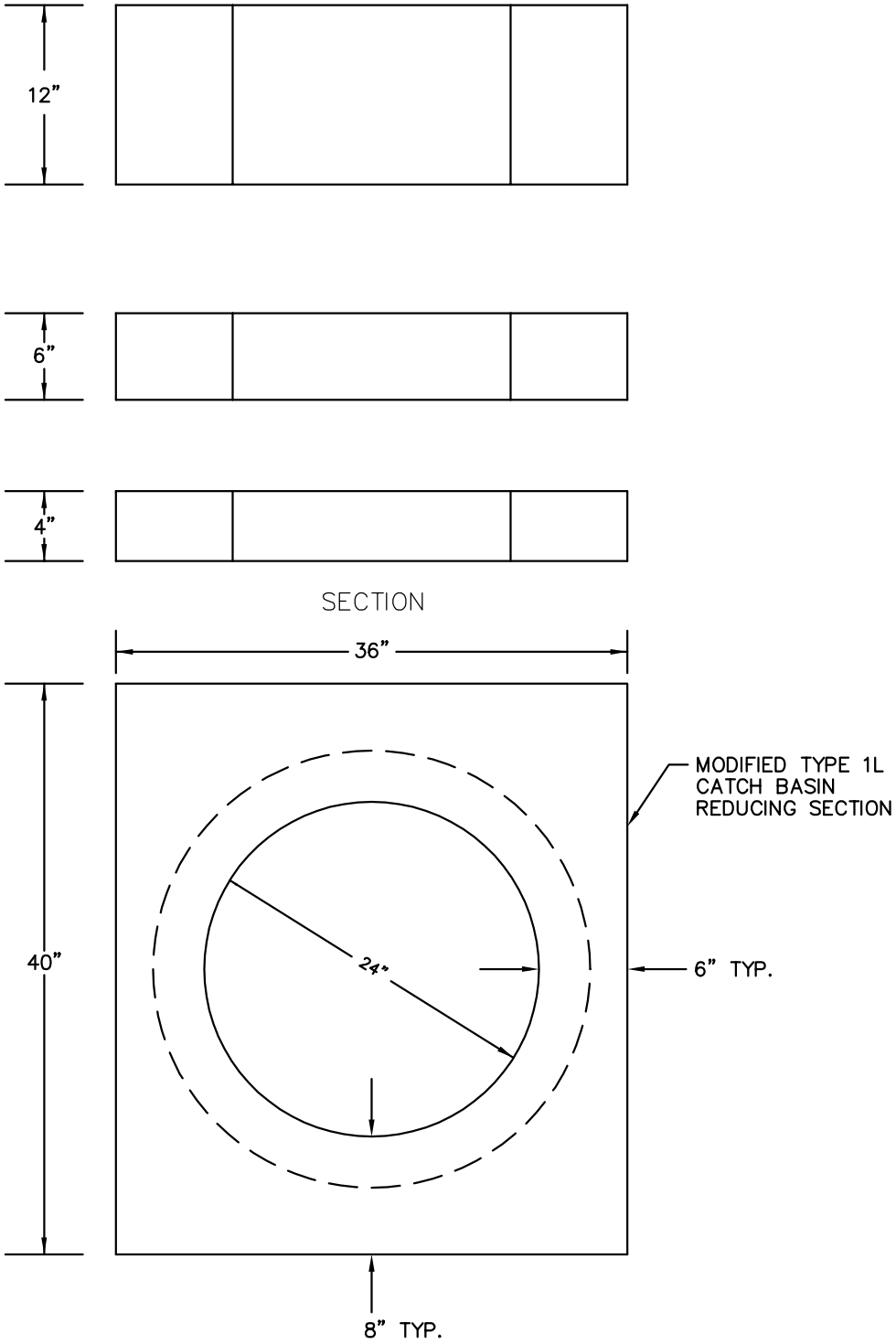

NOTES:

1. ITEMS SHOWN SHALL BE PRE-CAST,
2. APPLY NON-SHRINK GROUT TO INSIDE AND OUTSIDE OF ALL JOINTS, RISERS, RINGS AND FRAMES.

JANUARY 2014 NO SCALE

City of Bellevue

STORM AND SURFACE WATER UTILITY

TITLE

CONVERSION RISER FOR CATCH BASIN TYPE 1-L

NO. D-15

OUTLET PIPE DIAMETER	AREA INLET DIAMETER "I.D."	AVERAGE CONCRETE PIPE (lbs.)	NYLOPLAST AREA INLET (lbs.)
4"	12"	450	33
6"	12"	450	33
8"	18"	650	64

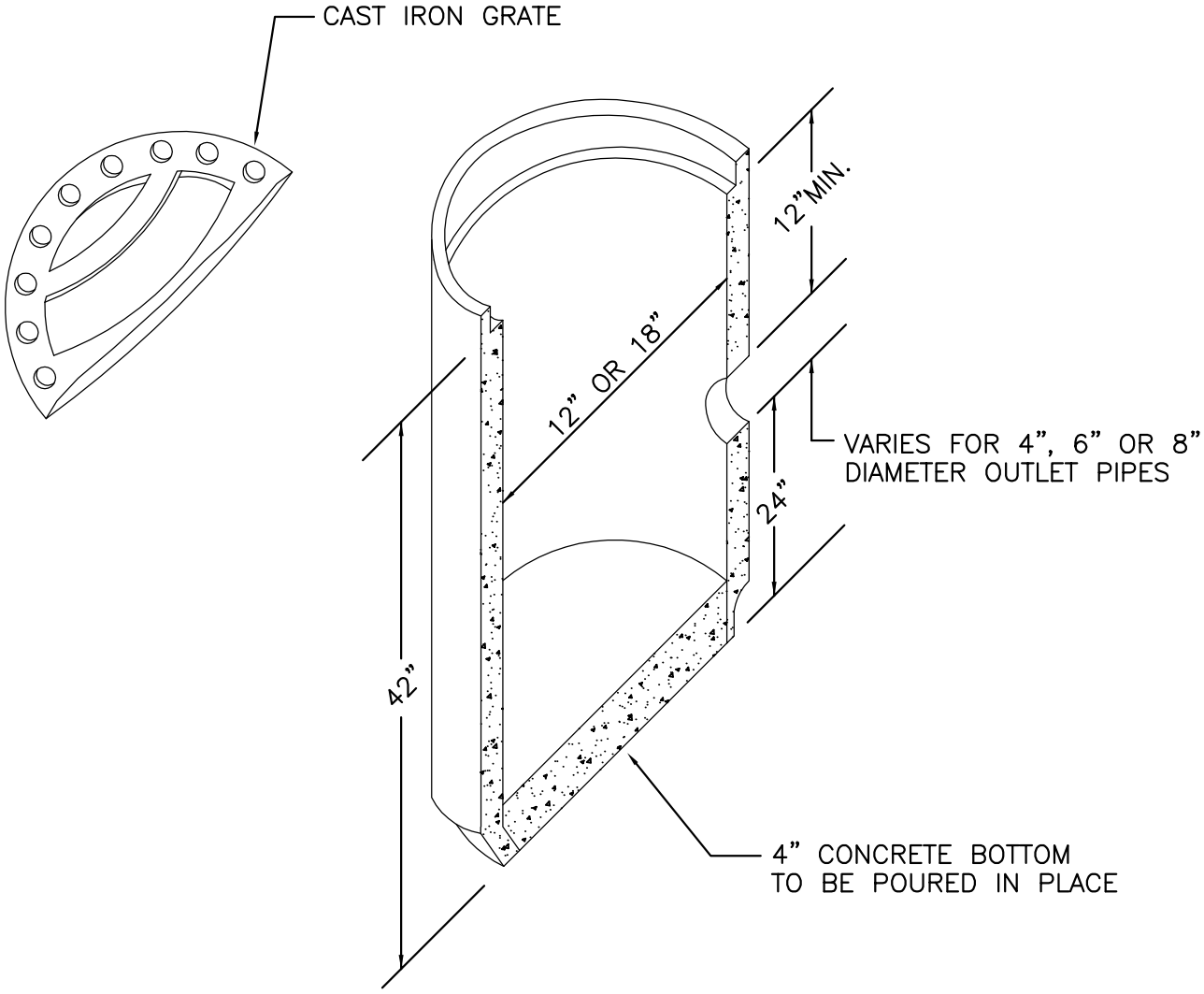

NOTES:

1. FOR USE IN NON-TRAFFIC AREAS ONLY
2. AREA INLET EITHER CONCRETE AS SHOWN, OR PVC STRUCTURE WITH DUCTILE IRON GRATE AS MANUFACTURED BY NYLOPLAST.

City of Bellevue

SURFACE WATER UTILITY

TITLE

AREA INLET

JANUARY 2014

NO SCALE

NO. D-16

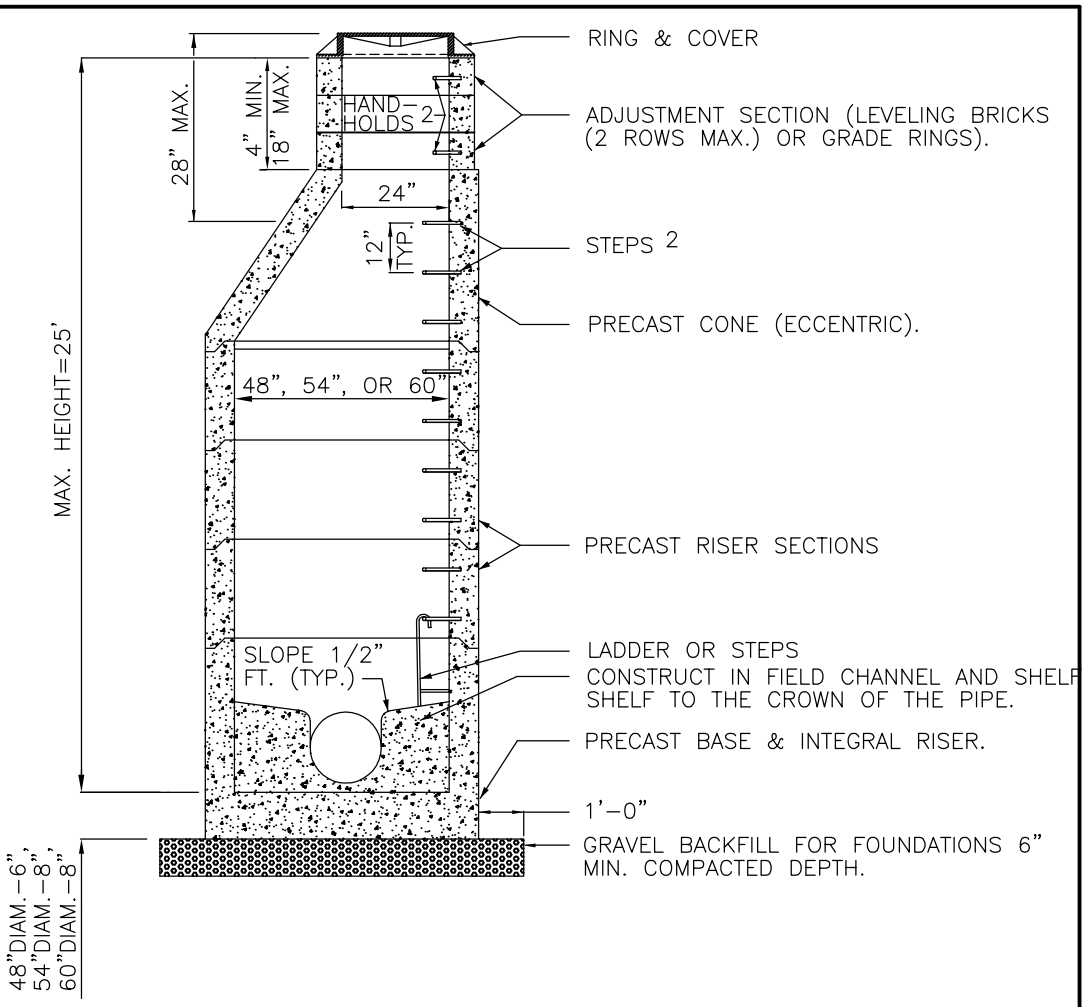

NOTES:

1. MANHOLES SHALL BE CONSTRUCTED IN ACCORDANCE WITH AASHTO M199 UNLESS OTHERWISE SHOWN ON PLANS OR NOTED IN THE STANDARD SPECIFICATIONS.
2. HANDHOLDS IN ADJUSTMENT SECTION SHALL HAVE 3" MIN. CLEARANCE. STEPS IN MANHOLE SHALL HAVE 6" MIN. CLEARANCE. SEE STD. DTL. D-15, "MANHOLE DETAILS." MANHOLDS SHALL BE PLACED IN ALTERNATING GRADE RINGS OR LEVELING BRICK COURSE WITH A MIN. OF ONE HAND HOLD BETWEEN THE LAST STEP AND THE TOP OF THE MANHOLE.
3. ALL PRECAST CONCRETE SHALL BE CLASS 4000. NON-REINFORCED CONCRETE IN CHANNEL AND SHELF SHALL BE CLASS 3000.
4. PRECAST BASES SHALL BE FURNISHED WITH CUTOUTS OR KNOCKOUTS. KNOCKOUTS SHALL HAVE WALL THICKNESS OF 2" MIN. UNUSED KNOCKOUTS NEED NOT BE GROUTED IF WALL IS LEFT INTACT. PIPES SHALL BE INSTALLED ONLY IN FACTORY KNOCKOUTS UNLESS OTHERWISE APPROVED BY THE ENGINEER.
5. KNOCKOUT OR CUTOUT HOLE SIZE SHALL EQUAL PIPE OUTER DIAM. PLUS MANHOLE WALL THICKNESS. MAX. HOLE SIZE BE 36" FOR 48" MANHOLE, 42" FOR 54" MANHOLE, 48" FOR 60" M.H. MIN. DISTANCE BETWEEN HOLES SHALL BE 8",
6. MANHOLE RINGS AND COVERS SHALL BE IN ACCORDANCE WITH SEC. 7.05 OF THE STANDARD SPECIFICATIONS. MATING SURFACES SHALL BE FINISHED TO ASSURE NON-ROCKING FIT WITH ANY COVER POSITION.
7. FOR HEIGHTS OF 12' OR LESS, MIN. SOIL BEARING VALUE SHALL EQUAL 3,300 POUNDS PER SQUARE FOOT. FOR HEIGHTS OVER 12" MIN. SOIL BEARING VALUE SHALL EQUAL 3,800 POUNDS PER SQUARE FOOT.
8. FOR DETAILS SHOWING LADDER, STEPS, HANDHOLDS AND TOP SLABS, SEE STD. DTL. D-5.
9. SEE THE STANDARD SPECIFICATIONS SEC. 7-05.3 FOR JOINT REQUIREMENTS.
10. APPLY NON-SHRINK GROUT TO INSIDE AND OUTSIDE OF ALL JOINTS, RISERS, RINGS AND FRAMES.

City of Bellevue

STORM AND SURFACE WATER UTILITY

TITLE

MANHOLE TYPE 1
48", 54", & 60"

JANUARY 2014

NO SCALE

NO. D-17

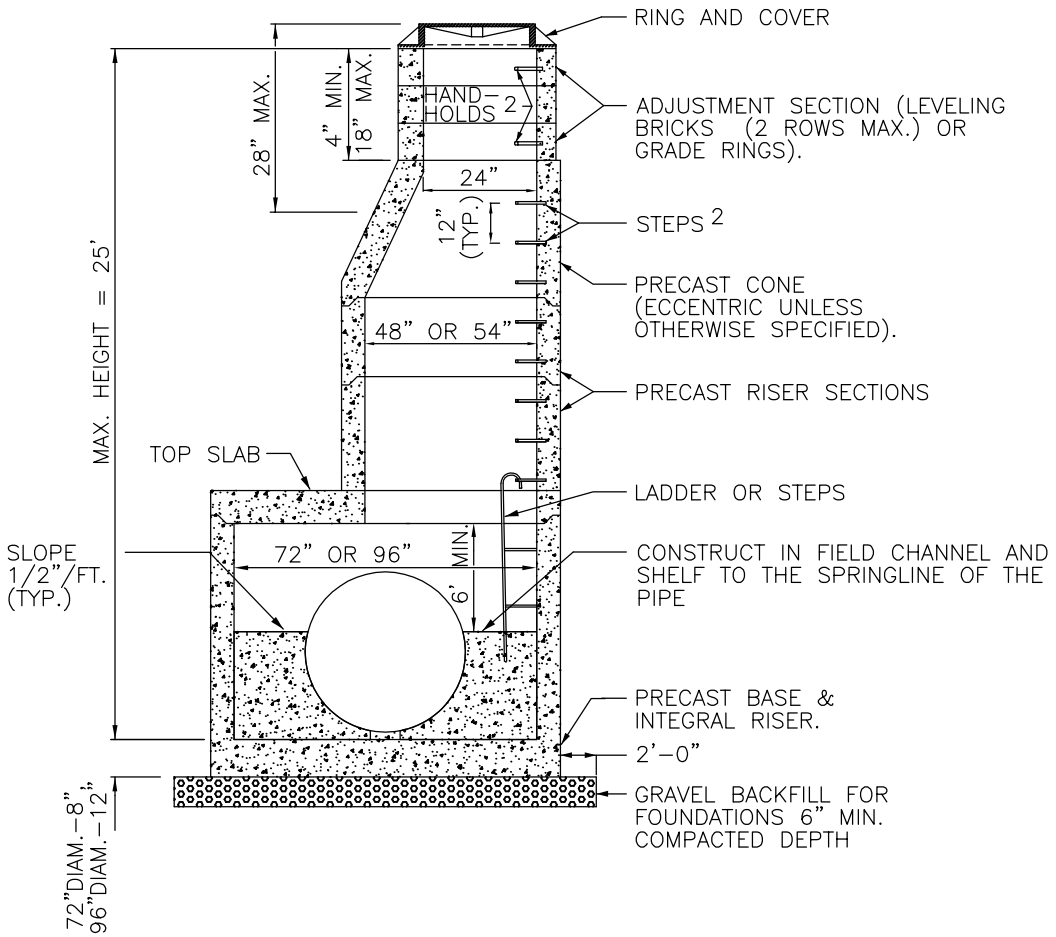

NOTES:

1. MANHOLES SHALL BE CONSTRUCTED IN ACCORDANCE WITH AASHTO M199 UNLESS OTHERWISE SHOWN ON PLANS OR NOTED IN THE STANDARD SPECIFICATIONS.
2. HANDHOLDS IN ADJUSTMENT SECTION SHALL HAVE 3" MIN. CLEARANCE. STEPS IN MANHOLE SHALL HAVE 6" MIN. CLEARANCE. SEE STD. DTL. D-15, "MANHOLE DETAILS." MANHOLDS SHALL BE PLACED IN ALTERNATING GRADE RINGS OR LEVELING BRICK COURSE WITH A MIN. OF ONE HANDHOLD BETWEEN THE LAST STEP AND THE TOP OF THE MANHOLE.
3. NON-REINFORCED CONCRETE IN CHANNEL AND SHELF SHALL BE CLASS 3000. ALL PRECAST CONCRETE SHALL BE CLASS 4000.
4. PRECAST BASES SHALL BE FURNISHED WITH CUTOUTS OR KNOCKOUTS. KNOCKOUTS SHALL HAVE WALL THICKNESS OF 2" MIN. UNUSED KNOCKOUTS NEED NOT BE GROUTED IF WALL IS LEFT INTACT. PIPES SHALL BE INSTALLED ONLY IN FACTORY KNOCKOUTS UNLESS OTHERWISE APPROVED BY THE ENGINEER.
5. KNOCKOUT OR CUTOUT HOLE SIZE SHALL EQUAL PIPE OUTER DIAM. PLUS MANHOLE WALL THICKNESS. MAX. HOLE SIZE BE 60" FOR 72" MANHOLE, 84" FOR 96" MANHOLE. MIN. DISTANCE BETWEEN HOLES SHALL BE 12".
6. MANHOLE RINGS AND COVERS SHALL BE IN ACCORDANCE WITH SEC. 7.05 OF THE STANDARD SPECIFICATIONS. MATING SURFACES SHALL BE FINISHED TO ASSURE NON-ROCKING FIT WITH ANY COVER POSITION.
7. FOR HEIGHTS OF 12' OR LESS, MIN. SOIL BEARING VALUE SHALL EQUAL 3,300 POUNDS PER SQUARE FOOT. FOR HEIGHTS OVER 12" MIN. SOIL BEARING VALUE SHALL EQUAL 3,800 POUNDS PER SQUARE FOOT.
8. FOR DETAILS SHOWING GRADE RING, LADDER, STEPS, HANDHOLDS, AND TOP SLABS, SEE STD. DTL. D-5.
9. SEE THE STANDARD SPECIFICATIONS SEC. 7-05.3 FOR JOINT REQUIREMENTS.
10. APPLY NON-SHRINK GROUT TO INSIDE AND OUTSIDE OF ALL JOINTS, RISERS, RINGS AND FRAMES.

JANUARY 2014 NO SCALE

City of Bellevue

STORM AND SURFACE WATER UTILITY

TITLE

MANHOLE TYPE 2
72" & 96"

NO. D-18

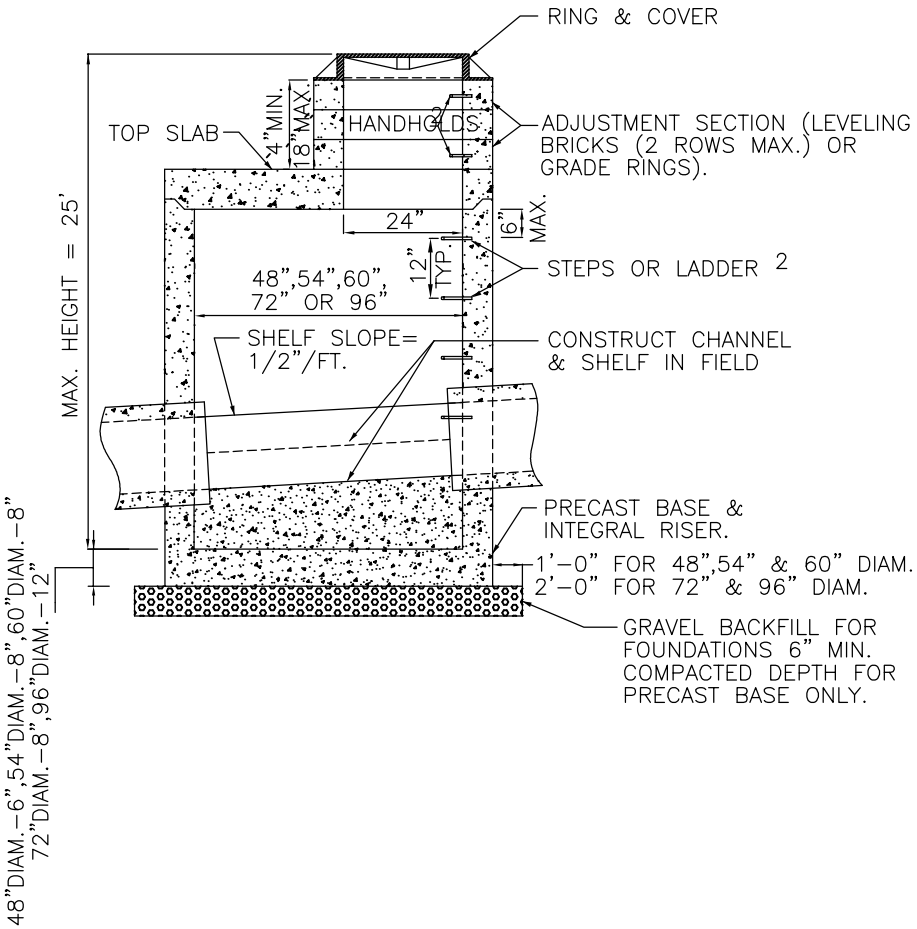

NOTES:

1. MANHOLES SHALL BE CONSTRUCTED IN ACCORDANCE WITH AASHTO M199 UNLESS OTHERWISE SHOWN ON PLANS OR NOTED IN THE STANDARD SPECIFICATIONS.
2. HANDHOLDS IN ADJUSTMENT SECTION SHALL HAVE 3" MIN. CLEARANCE. STEPS IN MANHOLE SHALL HAVE 6" MIN. CLEARANCE. SEE STD. DTL. D-15, "MANHOLE DETAILS." MANHOLDS SHALL BE PLACED IN ALTERNATING GRADE RINGS OR LEVELING BRICK COURSE WITH A MIN. OF ONE HAND HOLD BETWEEN THE LAST STEP AND THE TOP OF THE MANHOLE.
3. NON-REINFORCED CONCRETE IN CHANNEL AND SHELF SHALL BE CLASS 3000. ALL PRECAST CONCRETE SHALL BE CLASS 4000.
4. PRECAST BASES SHALL BE FURNISHED WITH CUTOUTS OR KNOCKOUTS. KNOCKOUTS SHALL HAVE WALL THICKNESS OF 2" MIN. UNUSED KNOCKOUTS NEED NOT BE GROUTED IF WALL IS LEFT INTACT. PIPES SHALL BE INSTALLED ONLY IN FACTORY KNOCKOUTS UNLESS OTHERWISE APPROVED BY THE ENGINEER.
5. KNOCKOUT OR CUTOUT HOLE SIZE SHALL EQUAL PIPE OUTER DIAM. PLUS MANHOLE WALL THICKNESS. MAX. HOLE SIZE BE 60" FOR 72" MANHOLE, 84" FOR 96" MANHOLE, MIN. DISTANCE BETWEEN HOLES SHALL BE 12".
6. MANHOLE RINGS AND COVERS SHALL BE IN ACCORDANCE WITH SEC. 7.05 OF THE STANDARD SPECIFICATIONS. MATING SURFACES SHALL BE FINISHED TO ASSURE NON-ROCKING FIT WITH ANY COVER POSITION.
7. FOR HEIGHTS OF 12' OR LESS, MIN. SOIL BEARING VALUE SHALL EQUAL 3,300 POUNDS PER SQUARE FOOT. FOR HEIGHTS OVER 12" MIN. SOIL BEARING VALUE SHALL EQUAL 3,800 POUNDS PER SQUARE FOOT.
8. FOR DETAILS SHOWING LADDER, STEPS, HANDHOLDS, AND TOP SLABS, SEE STD. DTL. D-5.
9. SEE THE STANDARD SPECIFICATIONS SEC. 7-05.3 FOR JOINT REQUIREMENTS.
10. APPLY NON-SHRINK GROUT TO INSIDE AND OUTSIDE OF ALL JOINTS, RINGS, RISERS AND FRAMES.

JANUARY 2014 NO SCALE

City of Bellevue

STORM AND SURFACE WATER UTILITY

TITLE

MANHOLE TYPE 3
48", 54", 60", 72" & 96"

NO. D-19

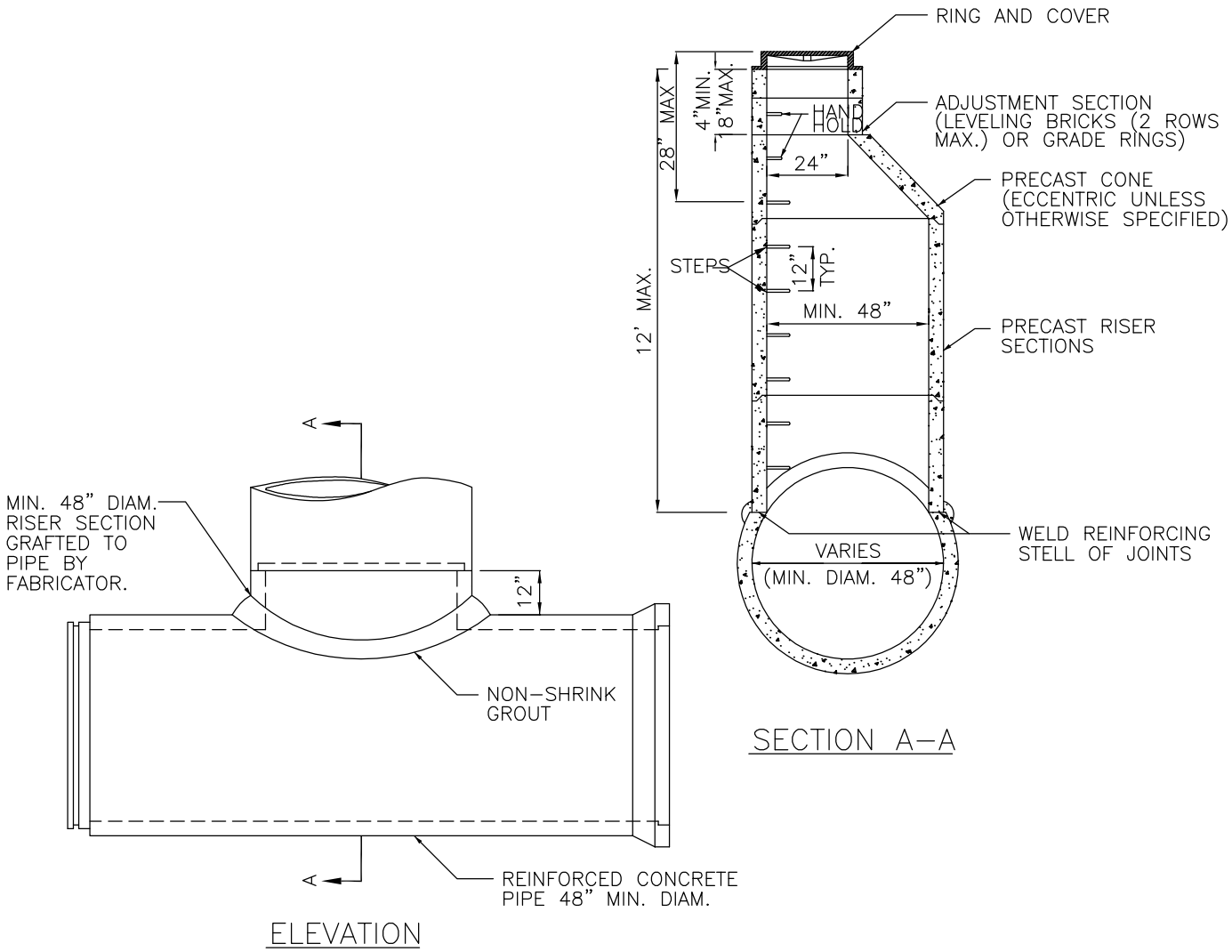

NOTES:

1. MANHOLES SHALL BE CONSTRUCTED IN ACCORDANCE WITH AASHTO M199 UNLESS OTHERWISE SHOWN ON PLANS OR NOTED IN THE STANDARD SPECIFICATIONS.
2. HANDHOLDS IN ADJUSTMENT SECTION SHALL HAVE 3" MIN. CLEARANCE. STEPS IN MANHOLE SHALL HAVE 6" MIN. CLEARANCE. SEE STD. DTL. D–5.
3. MANHOLE RINGS AND COVERS SHALL BE IN ACCORDANCE WITH SEC. 7.05 OF THE STANDARD SPECIFICATIONS. MATING SURFACES SHALL BE FINISHED TO ASSURE NON–ROCKING FIT WITH ANY COVER POSITION. SHALL BE FINISHED TO ASSURE NON–ROCKING FIT WITH ANY
4. ALL PRECAST CONCRETE SHALL BE CLASS 4000.
5. FOR DETAILS SHOWING, LADDER, STEPS, HANDHOLDS, AND TOP SLABS, SEE STD. DTL. D–5.
6. NOT FOR USE IN TRAFFIC BEARING AREAS.
7. MANHOLE DIAMETER SHALL EQUAL PIPE DIAMETER.
8. FOR REINFORCED CONCRETE PIPE ONLY.
9. APPLY NON–SHRINK GROUT TO INSIDE AND OUTSIDE OF ALL JOINTS, RISERS, RINGS AND FRAMES.

City of Bellevue

STORM AND SURFACE WATER UTILITY

TITLE

MANHOLE TYPE 4

JANUARY 2014

NO SCALE

NO. D–20

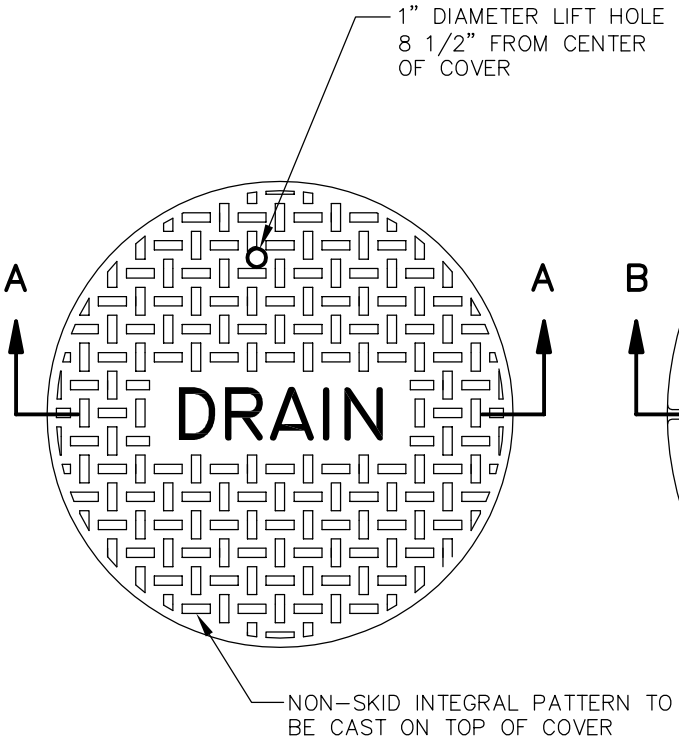

COVER PLAN

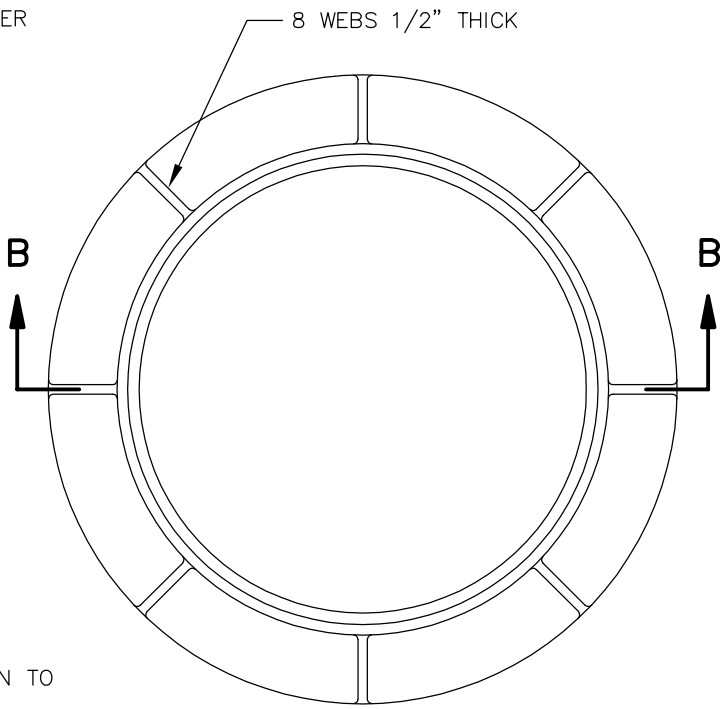

RING PLAN

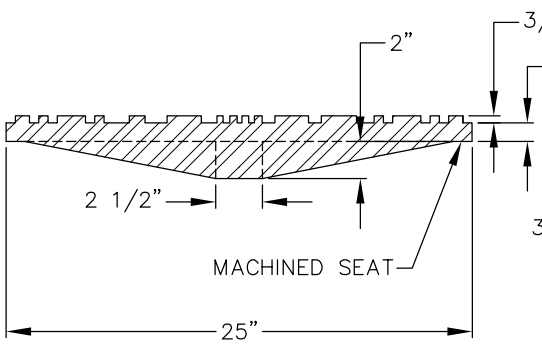

SECTION A–A

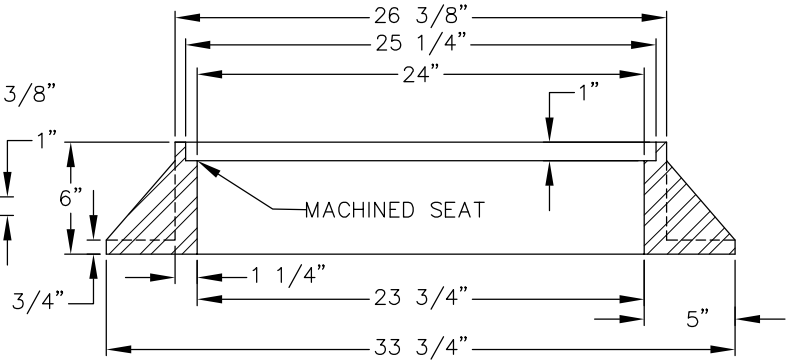

SECTION B–B

NOTES:

1. COVER SHALL HAVE THE WORD "DRAIN" CAST IN 3" RAISED LETTERS.
2. ONLY FOR USE IN PUBLIC RIGHT-OF-WAY (PAVED AREAS AND SIDEWALKS).
3. RING AND COVER SHALL BE RATED HS-20.
4. RING AND COVER MATERIAL IS DUCTILE IRON, ASTM A536 - GRADE 80-55-06 OR CAST IRON, ASTM A-48, CLASS 30.
5. OLYMPIC FOUNDRY MH30A, OR EQUAL.
6. DUCTILE OR CAST COVER SHALL HAVE MINIMUM WEIGHT OF 150 LBS.
7. DUCTILE OR CAST RING SHALL HAVE MINIMUM WEIGHT OF 210 LBS.

City of Bellevue

STORM AND SURFACE WATER UTILITY

TITLE

24" MANHOLE RING AND COVER

JANUARY 2014

NO SCALE

NO. D-21

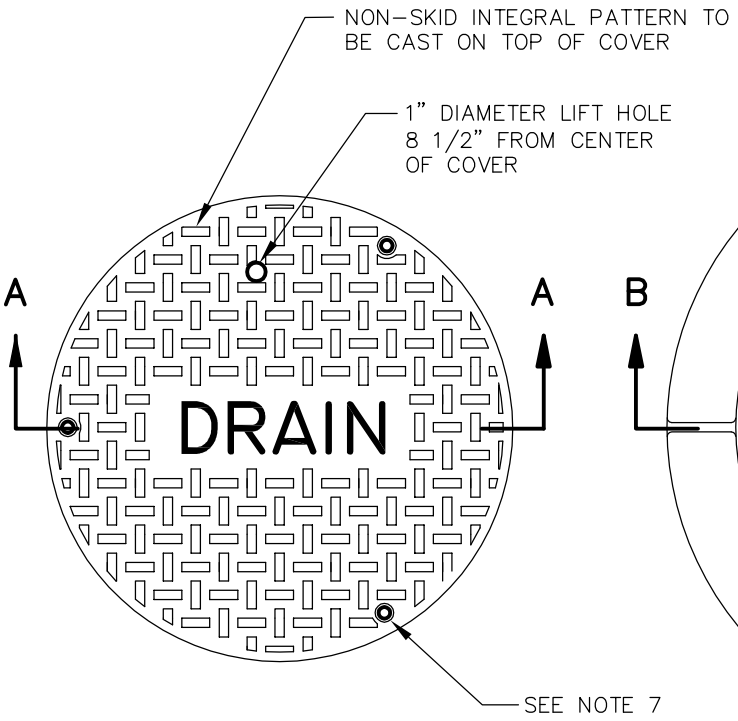

COVER PLAN

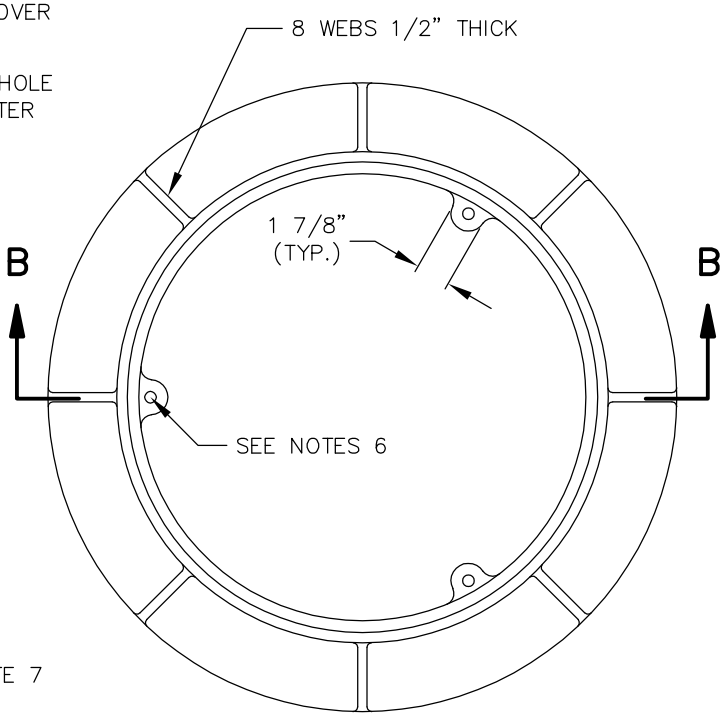

RING PLAN

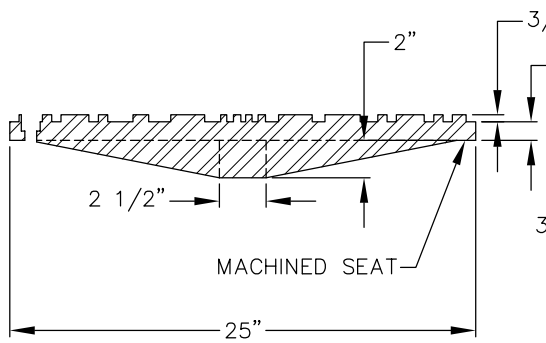

SECTION A–A

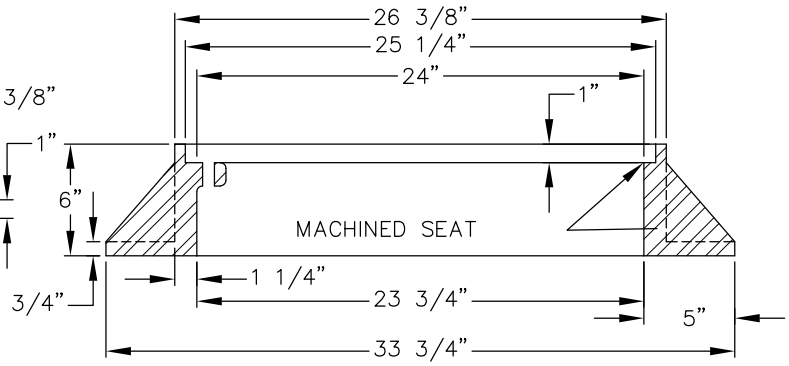

SECTION B–B

NOTES:

1. COVER SHALL HAVE THE WORD "DRAIN" CAST IN 3" RAISED LETTERS.
2. (NOT USED).
3. RING AND COVER MATERIAL: DUCTILE IRON ASTM A536–GRADE 80–55–06 OR CAST IRON ASTM A48–CLASS 30.
4. DUCTILE OR CAST COVER SHALL HAVE MINIMUM WEIGHT OF 150 LBS.
5. DUCTILE OR CAST RING SHALL HAVE MINIMUM WEIGHT OF 210 LBS.
6. RING SHALL HAVE THREE 5/8"–11 N.C. TAPPED HOLES AT 120 DEGREES.
7. COVER SHALL HAVE THREE COUNTERSUNK 5/8"–11 N.C THROUGH HOLES AT 120 DEGREES TO MATCH RING.
8. LOCKING BOLTS SHALL BE 5/8"–11 N.C. X 2" 304 STAINLESS STEEL SOCKET (ALLEN) HEAD.
9. OLYMPIC FOUNDRY MH30AD/T, OR EQUAL.
10. RING AND COVER SHALL BE RATED H–20.

City of Bellevue

STORM AND SURFACE WATER UTILITY

TITLE

24" BOLT–LOCKING MANHOLE RING AND COVER

JANUARY 2014

NO SCALE

NO. D–22

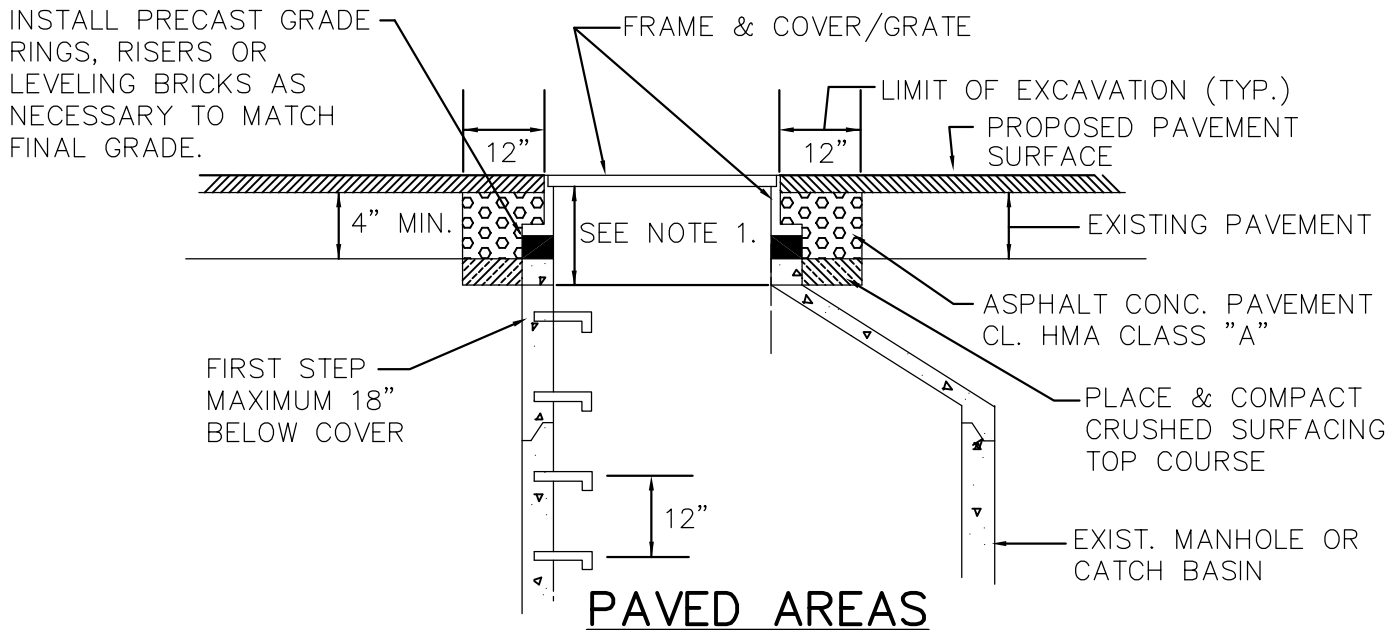

PAVED AREAS

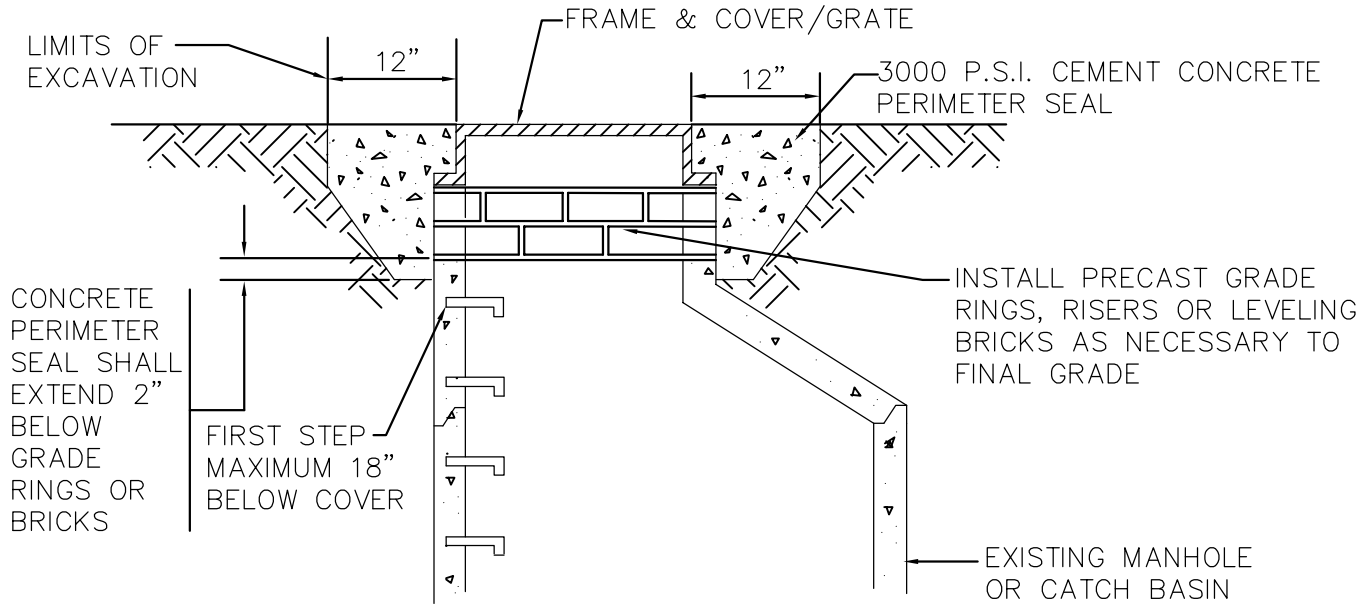

UNPAVED AREAS

NOTES:

1. WHERE DEPTH OF NECK EXCEEDS 24 INCHES, ADJUST MANHOLE/CATCH BASIN TO GRADE BY INSERTING NEW BARREL SECTION BETWEEN THE CONE/SLAB AND EXISTING BARREL.
2. GRADE RINGS, CONCRETE RISERS AND CONCRETE BRICK SHALL BE SET IN 3/4" NON-SHRINK GROUT, PLASTER SMOOTH INSIDE AND OUT.
3. STEPS OR HAND HOLDS SHALL BE ADDED AS NEEDED.
4. PRECAST GRADE RINGS AND RISERS MUST BE CAST WITH GROOVE TO ALLOW FIELD INSTALLATION OF SAFETY STEP.
5. REPLACE EXISTING FRAME AND COVER/GRATE IF NON-STANDARD OR WORN.
6. GROUT INSIDE AND OUTSIDE OF MANHOLE/ CATCH BASIN NECK TO ACHIEVE WATER TIGHT CONSTRUCTION. FINISH SMOOTH THE INSIDE OF THE NECK. USE NON-SHRINK GROUT ONLY.
7. LOCKING RING AND COVERS ARE REQUIRED IN ALL UNPAVED AREAS AND EASEMENTS. LOCKING RING AND COVER SHALL CONFORM TO STANDARD DETAIL D-22.

City of Bellevue

STORM AND SURFACE WATER UTILITY

TITLE

MANHOLE/CATCH BASIN ADJUSTMENT DETAIL

JANUARY 2014 NO SCALE

NO. D-23

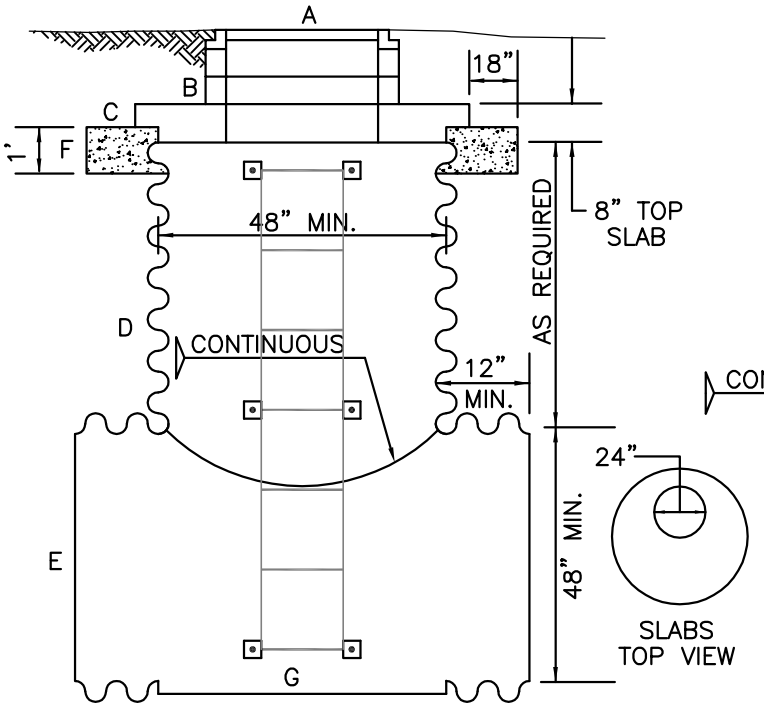

CONCENTRIC ELEVATION

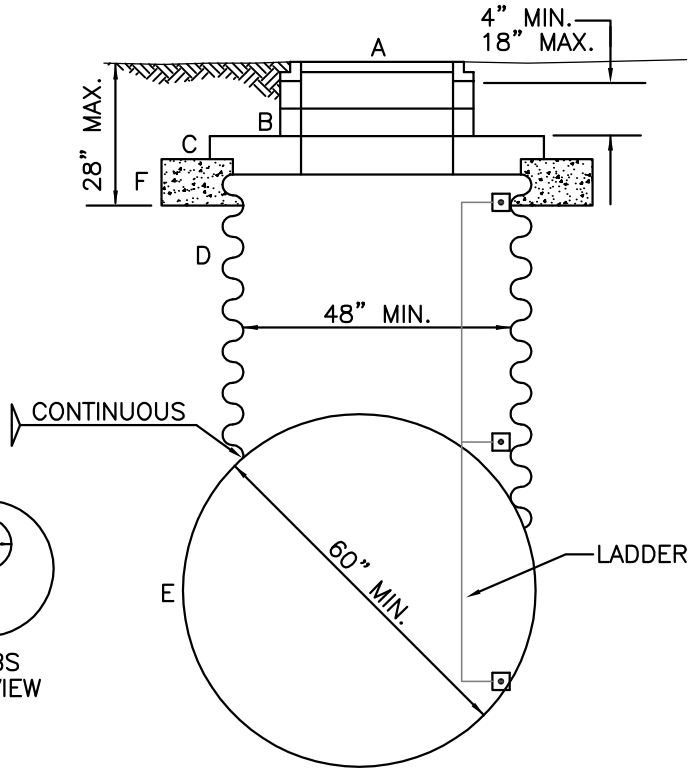

ECCENTRIC SECTION

LEGEND

A BOLT LOCKING MANHOLE RING AND COVER PER DETAIL D–22.

B CONCRETE GRADE RINGS AS NEEDED TO MATCH FINISHED GRADE PER DETAIL D–23.

C CONCRETE TOP SLAB FOR TYPE 2 CATCH BASIN, BEARS ON CONCRETE COLLAR.

D CMP RISER: 10 GAUGE HELICAL OR ANNULAR CORRUGATED METAL PIPE, DIAMETER TO MATCH DETENTION PIPE.

E CORRUGATED METAL STUBS AND DETENTION PIPE TO BE SAME GAUGE. STUB LENGTHS TO BE 12" MIN.

F CONCRETE COLLAR CL 3000.

G STEEL BOTTOM: 8 GAUGE BOTTOM PLATE WELDED TO RISER

NOTES:

1. ALL METAL PARTS AND SURFACES MUST BE MADE OF CORROSION RESISTANT MATERIAL. PIPES SHALL BE ASPHALT COATED TREATMENT #1, GALVANIZED STEEL OR ALUMINIZED STEEL.
2. NOT FOR USE IN ROADWAYS, DRIVEWAYS, AND OTHER VEHICULAR TRAFFIC AREAS.
3. FOR USE IN DETENTION PIPES ONLY.
4. APPLY NON–SHRINK GROUT TO INSIDE AND OUTSIDE OF ALL JOINTS, RISERS, RINGS, AND FRAMES.

City of Bellevue

STORM AND SURFACE WATER UTILITY

TITLE

CORRUGATED METAL MANHOLE

JANUARY 2014

NO SCALE

NO. D–24

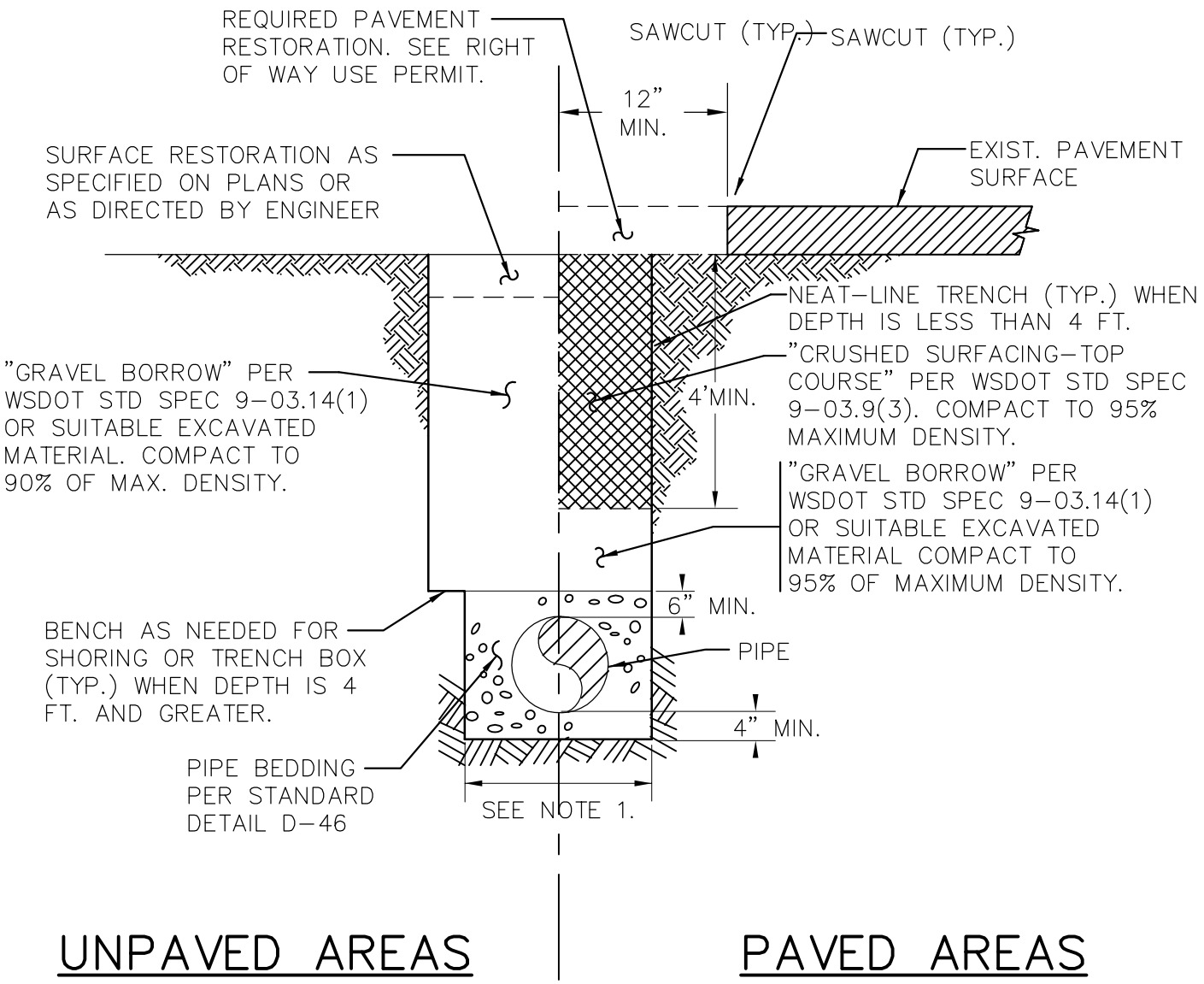

NOTES:

1. MAXIMUM WIDTH OF TRENCH AT TOP OF PIPE
   * 30" FOR PIPE UP TO AND INCLUDING 12" NOMINAL DIAMETER.
   * O.D. PLUS 16" FOR PIPE LARGER THAN 12" NOMINAL DIAMETER.
2. EXCAVATIONS OVER 4' DEEP SHALL COMPLY WITH THE SAFETY STANDARD DESCRIBED IN CHAPTER 296-155-PART N OF THE WAC.
3. SEE "BACKFILLING TRENCHES" IN CHAPTER D8 OF THE ENGINEERING STANDARDS FOR ADDITIONAL CONSTRUCTION REQUIREMENTS.

City of Bellevue

STORM AND SURFACE WATER UTILITY

TITLE

TYPICAL TRENCH DETAIL

JANUARY 2014

NO SCALE

NO. D-25

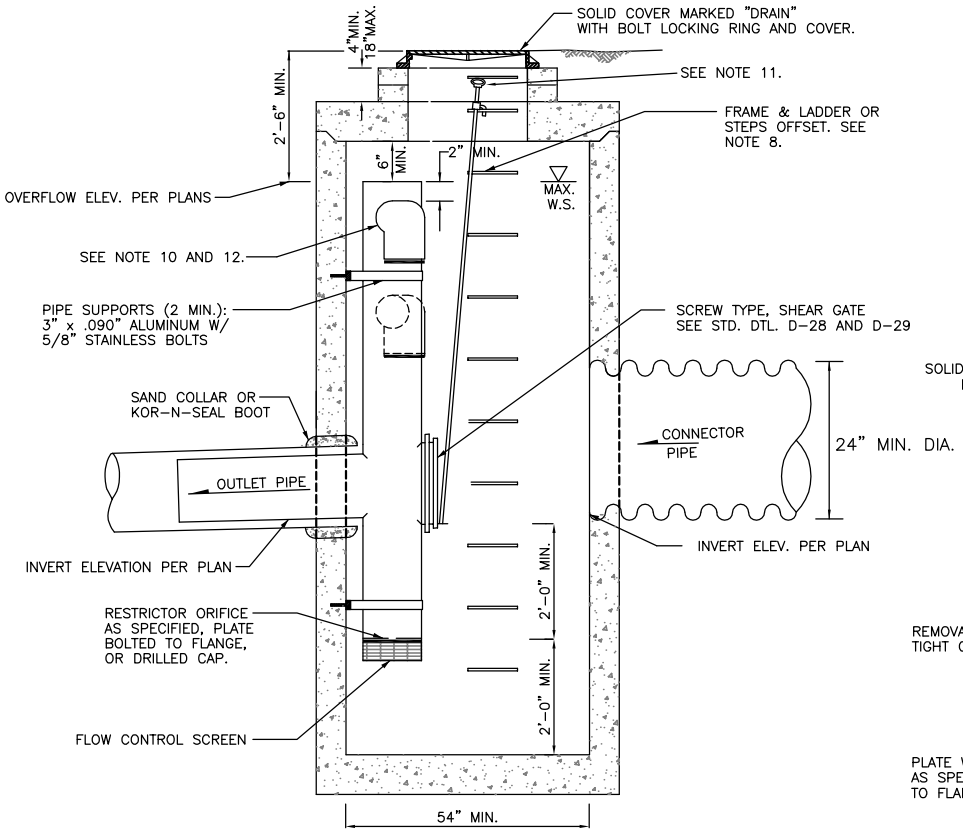

CATCH BASIN TYPE 2

DIAM. AS REQUIRED BY PLANS

NOTE:
ATTACH SCREEN TO CMP CROSS W/ 6 1" METAL SCREWS-2 PER STRAP, OR USE STAINLESS STEEL PIPE CLAMP

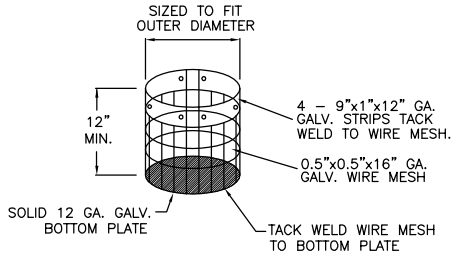

FLOW CONTROL SCREEN

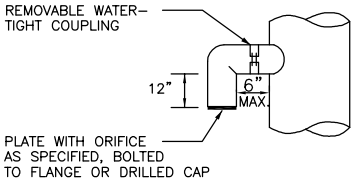

ELBOW DETAIL

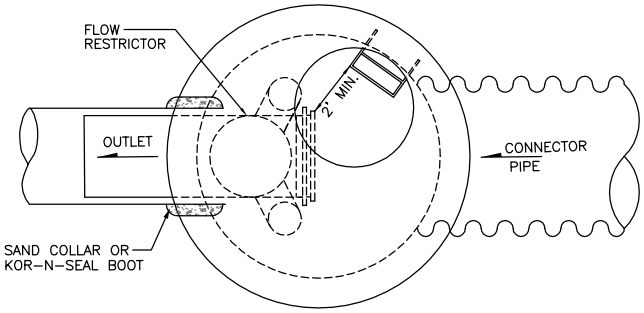

PLAN

NOTES:

1. PIPE SIZES, INVERT ELEVATIONS, ORIFICE SIZES, OVERFLOW ELEVATIONS AND SLOPES; PER ENGINEER APPROVED STAMPED PLANS.
2. OUTLET CAPACITY: NOT LESS THAN COMBINED INLETS.
3. EXCEPT AS SHOWN OR NOTED, UNITS SHALL BE CONSTRUCTED IN ACCORDANCE WITH THE REQUIREMENTS FOR CATCH BASIN TYPE 2, 54" MIN. DIAM.
4. PIPE SUPPORTS AND RESTRICTOR SHALL BE OF SAME MATERIAL, AND BE ANCHORED AT 3' MAX. SPACING BY 5/8" DIAMETER STAINLESS STEEL EXPANSION BOLTS OR EMBEDDED 2" IN WALL.
5. THE RESTRICTOR SHALL BE FABRICTED FROM 0.060" ALUMINUM, PVC, CPE, OR HDPE PIPE PER THESE ENGINEERING STANDARDS.
6. OUTLET SHALL BE CONNECTED TO STORM DRAINAGE PIPE WITH SUITABLE COUPLER OR GROUTED INTO THE BELL OF CONCRETE PIPE.
7. THE VERTICAL RISER STEM OF THE RESTICTOR SHALL BE THE SAME DIAM. AS THE HORIZONTAL OUTLET PIPE, WITH AN 8" MIN. DIAM. VERTICLE RISER SECTION SHALL BE ALIGNED PLUMB VERTICALLY. HORIZONTAL SECTION SHALL MATCH OUTLET PIPE SLOPE.
8. FRAME AND LADDER OR STEPS OFFSET SO THAT:
   A. SCREW TYPE SHEAR GATE IS VISIBLE FROM TOP.
   B. CLIMB DOWN SPACE IS CLEAR OF RISER AND SCREW TYPE SHEAR GATE.
   C. FRAME IS CLEAR OF CURB.
9. IF METAL OUTLET PIPE CONNECTS TO CEMENT CONCRETE PIPE: OUTLET PIPE TO HAVE SMOOTH O.D. EQUAL TO CONCRETE PIPE I.D. LESS 1/4".
10. MULTI-ORIFICE ELBOWS MAY BE LOCATED AS SHOWN OR ALL ON ONE SIDE OF RISER TO ASSURE LADDER CLEARANCE.
11. IF PIVOTING TYPE SHEAR GATE IS USED (PRIVATE SYSTEMS ONLY) SHEAR GATE HANDLE SHALL BE ATTACHED TO ADDER/STEP LOCATED WITHIN 24" ACCESS SECTION.
12. IF NOTCHED WEIR IS USED IN LIEU OF ELBOW, BAFFLE SHALL NOT OBSTRUCT ACCESS TO THE STRUCTURE.
13. APPLY NON-SHRINK GROUT TO INSIDE AND OUTSIDE OF ALL JOINTS, RINGS, RISERS, FRAMES AND PIPE PENETRATIONS.
14. PENETRATE CARRIER PIPE THROUGH VAULT WALL.
15. USE APPROVED WATERTIGHT STRUCTURE ADAPTOR.
16. SLIP SMOOTH-BORE HORIZONTAL LEG OF FLOW CONTROL TEE INSIDE CARRIER PIPE.
17. NO FLOW CONTROL JOINT OUTSIDE OF STRUCTURE.

City of Bellevue

STORM AND SURFACE WATER UTILITY

TITLE

FLOW CONTROL STRUCTURE

JANUARY 2014 NO SCALE

NO. D-26

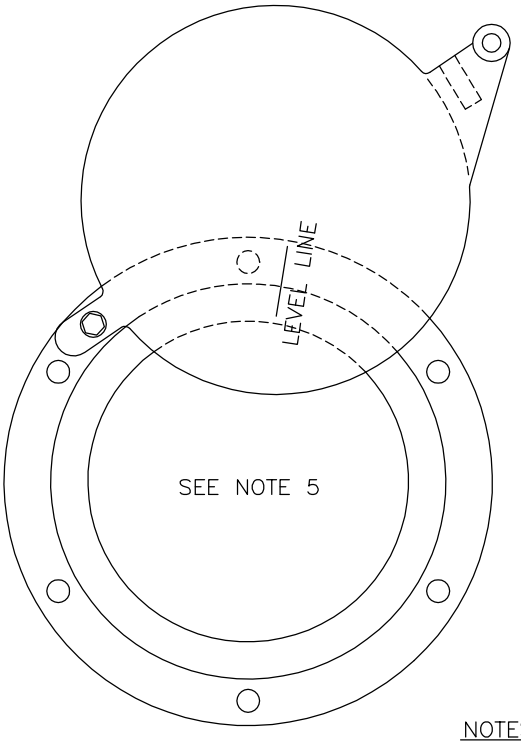

MAXIMUM OPENING OF GATE

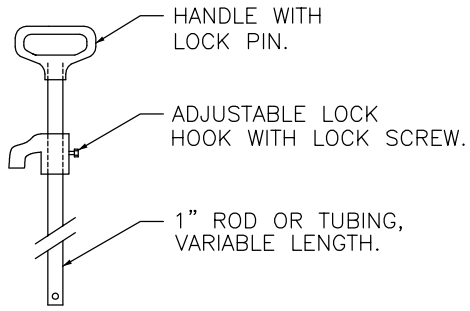

LIFT HANDLE

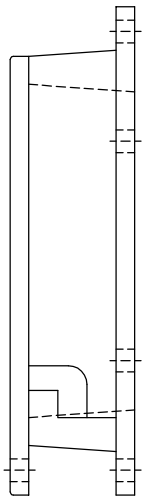

SIDE

NOTES:

1. SHEAR GATE SHALL BE ALUMINUM ALLOY PER ASTM B-26-ZG-32a OR CAST IRON ASTM A48 CLASS 30B AS REQUIRED.
2. GATE SHALL BE 8" DIAMETER FOR PIPE 12 INCHES OR LESS IN DIAMETER, 12" DIAMETER FOR PIPES GREATER THAN 12" INCHES.
3. GATE SHALL BE JOINED TO TEE SECTION BY BOLTING THROUGH FLANGE.
4. LIFT ROD: AS SPECIFIED BY MFR. WITH HANDLE EXTENDING TO WITHIN ONE FOOT OF COVER AND ADJUSTABLE HOOK LOCK FASTENED TO FRAME OR UPPER HANDHOLD.
5. GATE SHALL NOT OPEN BEYOND THE CLEAR OPENING BY LIMITED HINGE MOVEMENT, STOP TAB, OR SOME OTHER DEVICE.
6. NEOPRENE RUBBER GASKET REQUIRED BETWEEN RISER MOUNTING FLANGE AND GATE FLANGE, STOP TAB, OR SOME OTHER DEVICE.
7. MATING SURFACES OF LID AND BODY TO BE MACHINED FOR PROPER FIT.
8. FLANGE MOUNTING BOLTS SHALL BE 3/8" DIAM. STAINLESS STEEL.
9. ALTERNATE SHEAR GATES TO THE DESIGN SHOWN ARE ACCEPTABLE, PROVIDED THEY MEET THE MATERIAL SPECIFICATIONS ABOVE.
10. FOR PRIVATE USE ONLY.

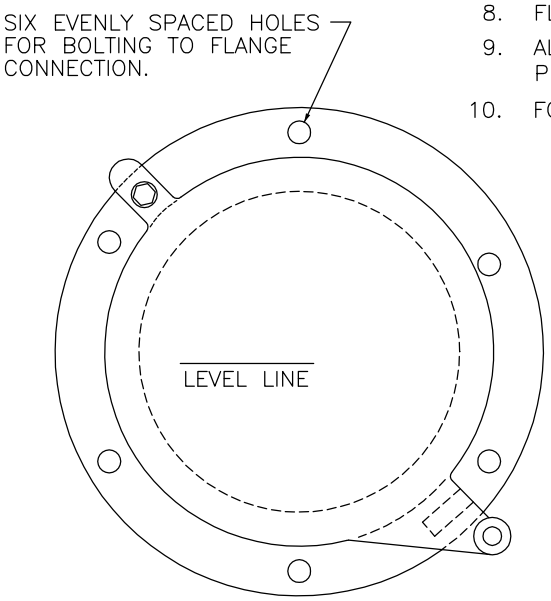

FRONT

City of Bellevue

STORM AND SURFACE WATER UTILITY

TITLE

PIVOTING SHEAR GATE DETAIL

JANUARY 2014

NO SCALE

NO. D-27

1 FRAME–CAST IRON
2 COVER–CAST IRON
3 ARCH–CAST IRON
4 RAILS–304 STN. STL. (CAST IRON, THRU 14")
5 YOKE–CAST IRON
6 THRUST NUT–BRONZE
7 THREADED STEM–BRONZE
8 COLLAR–CAST IRON
9 STEM EXT BRKT–
10 STEEL EXT STEM MATL. AS REQ'D.
11 2" SQUARE OPERATING NUT
12 BRONZE SEAT

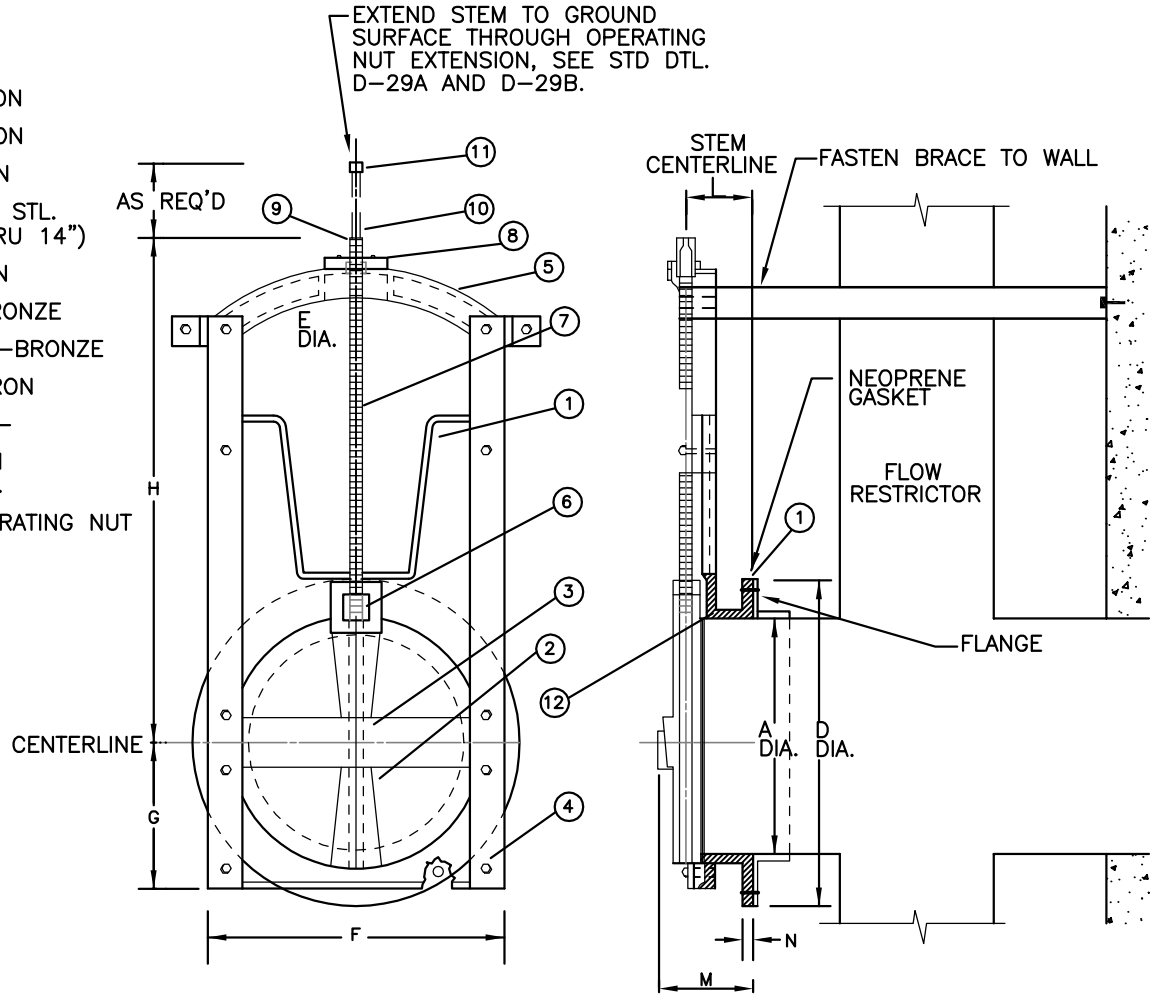

	A	BC	D	E	F	G	H	K	L	M	N	P	R	S
DIMENSIONS (IN INCHES)	8	11 3/4	13 1/2	7/8	11 1/8	5 1/2	17 5/8	10	4 1/2	7	3/4	7/8	3/4	8
	12	17	19	7/8	15 5/8	8	24 1/4	12	4 1/2	7 1/2	1	1	7/8	12

NOTES:

1. FOR OUTLET PIPE DIAMETERS OF 12 INCHES OR LESS, USE 8 INCH SHEAR GATE, GREATER THAN 12 INCHES, USE 12 INCH SHEAR GATE.
2. AWWA C509 RESILIENT SEATED GATE VALVE MAY BE SUBSTITUTED FOR GATE PER ENGINEER'S APPROVAL.

City of Bellevue

STORM AND SURFACE WATER UTILITY

TITLE

SCREW–TYPE SHEAR GATE

JANUARY 2014

NO SCALE

NO. D–28

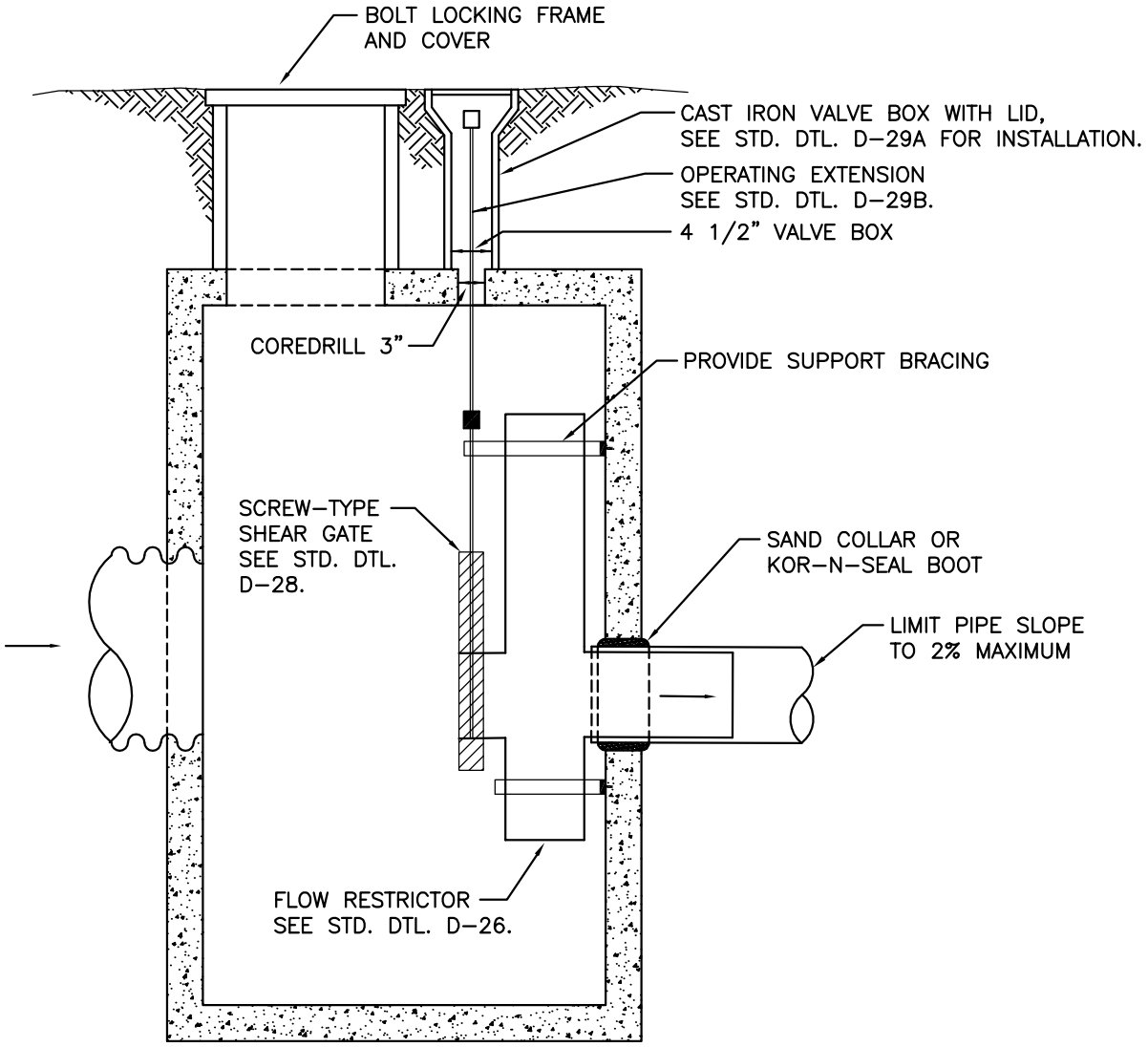

NOTES:

1. CORE DRILL HOLE IN CATCH BASIN LID. GROUT WATER VALVE BOX IN PLACE.
2. ALL METAL PARTS & SURFACES MUST BE CORROSION RESISTANT. STEEL HARDWARE SHALL BE GALVANIZED. PIPES SHALL BE GALVANIZED, ASPHALT COATED (TREATMENT 1) OR ALUMINIZED. COMPLETE CORROSION PROTECTION MUST BE ASSURED.
3. APPLY NON-SHRINK GROUT TO INSIDE AND OUTSIDE OF ALL JOINTS, RINGS, RISERS, PIPE PENETRATIONS AND FRAMES.
4. ALL PIPES SHALL BE PERPENDICULAR TO FACE OF VAULT.
5. PENETRATE CARRIER PIPE THROUGH VAULT WALL.
6. USE APPROVED WATERTIGHT STRUCTURE ADAPTOR.
7. SLIP SMOOTH-BORE HORIZONTAL LEG OF FLOW CONTROL TEE INSIDE CARRIER PIPE.
8. NO FLOW CONTROL JOINT OUTSIDE OF STRUCTURE.

City of Bellevue

STORM AND SURFACE WATER UTILITY

TITLE

SHEAR GATE VALVE VAULT

NO. D-29

JANUARY 2014

NO SCALE

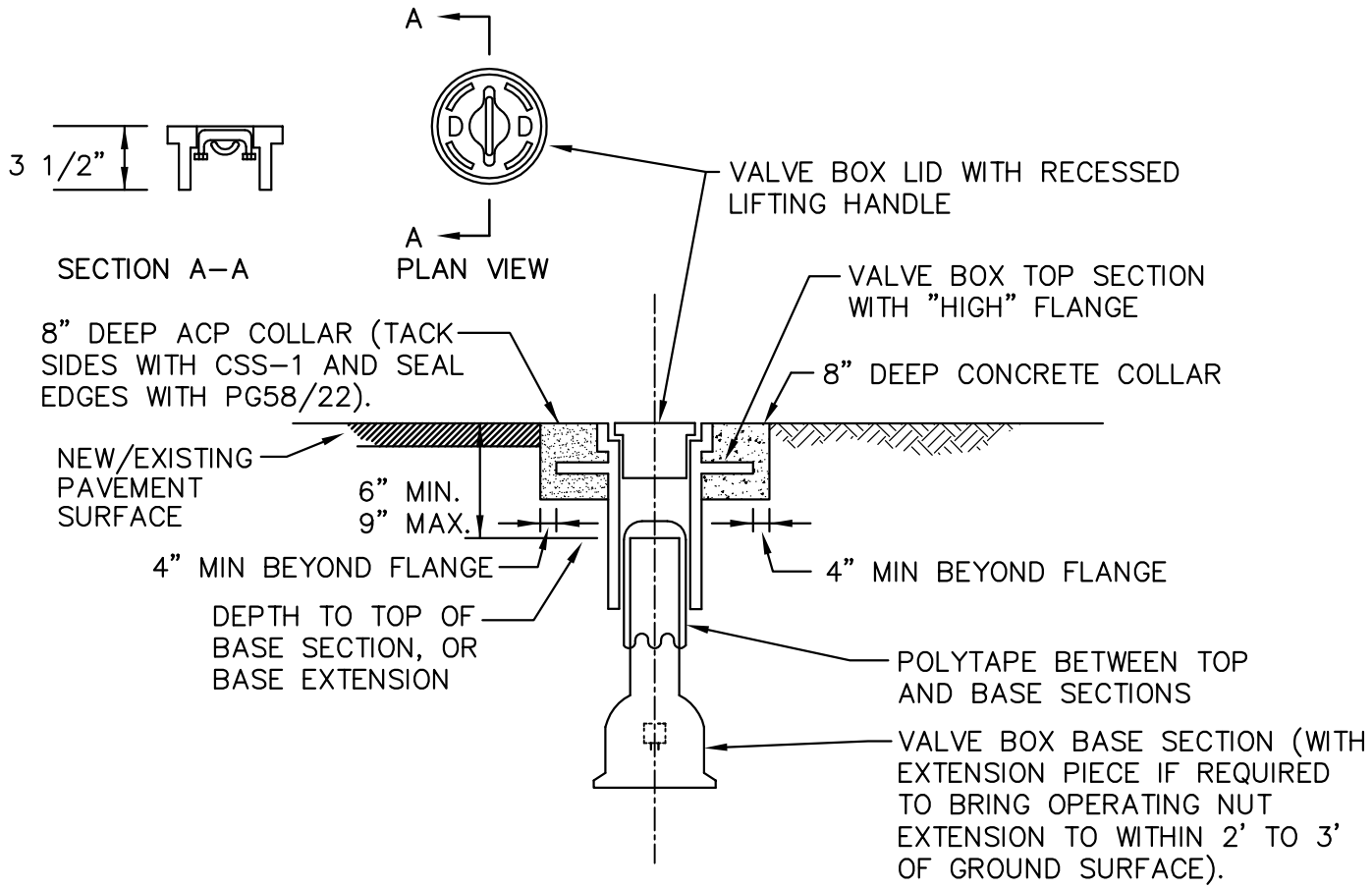

PAVED AREAS

UNPAVED AREAS

NOTES:

1. ALL PARTS SHALL BE CAST OR DUCTILE IRON AND COATED WITH. ASPHALTIC VARNISH.
2. OLYMPIC FOUNDRY INC: #VB045 LID, TOP AND BASE.
3. RICH (VANRICH CASTING CORP.): TOP SECTION AND LID #045 WITH RICH STANDARD BASE.
4. 12" ADJUSTING SLEEVE #044A.

City of Bellevue

STORM AND SURFACE WATER UTILITY

TITLE

VALVE BOX AND EXTENSION INSTALLATION

JANUARY 2014

NO SCALE

NO. D–29A

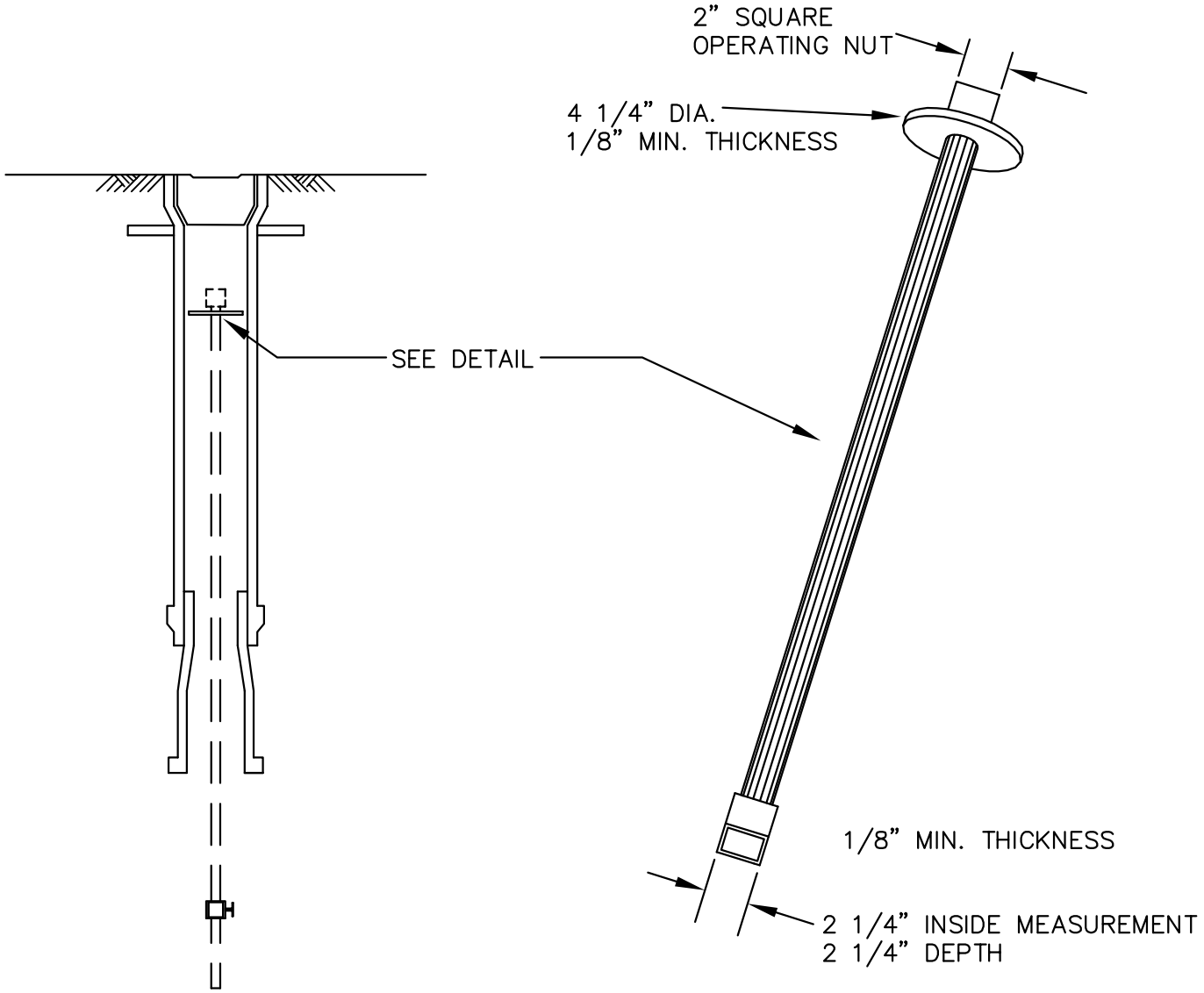

VALVE OPERATING NUT EXTENSION

EXTENSIONS ARE REQUIRED WHEN THE VALVE NUT IS MORE THAN THREE (3) FEET BELOW FINISHED GRADE. EXTENSIONS ARE TO BE A MINIMUM OF ONE (1) FOOT LONG. ONLY ONE EXTENSION TO BE USED PER VALVE.

NOTES:

1. ALL EXTENSIONS ARE TO BE MADE OF STEEL, SIZED AS NOTED, AND HOT DIPPED GALVANIZED.

City of Bellevue

STORM AND SURFACE WATER UTILITY

TITLE

VALVE OPERATING EXTENSION

JANUARY 2014

NO SCALE

NO. D-29B

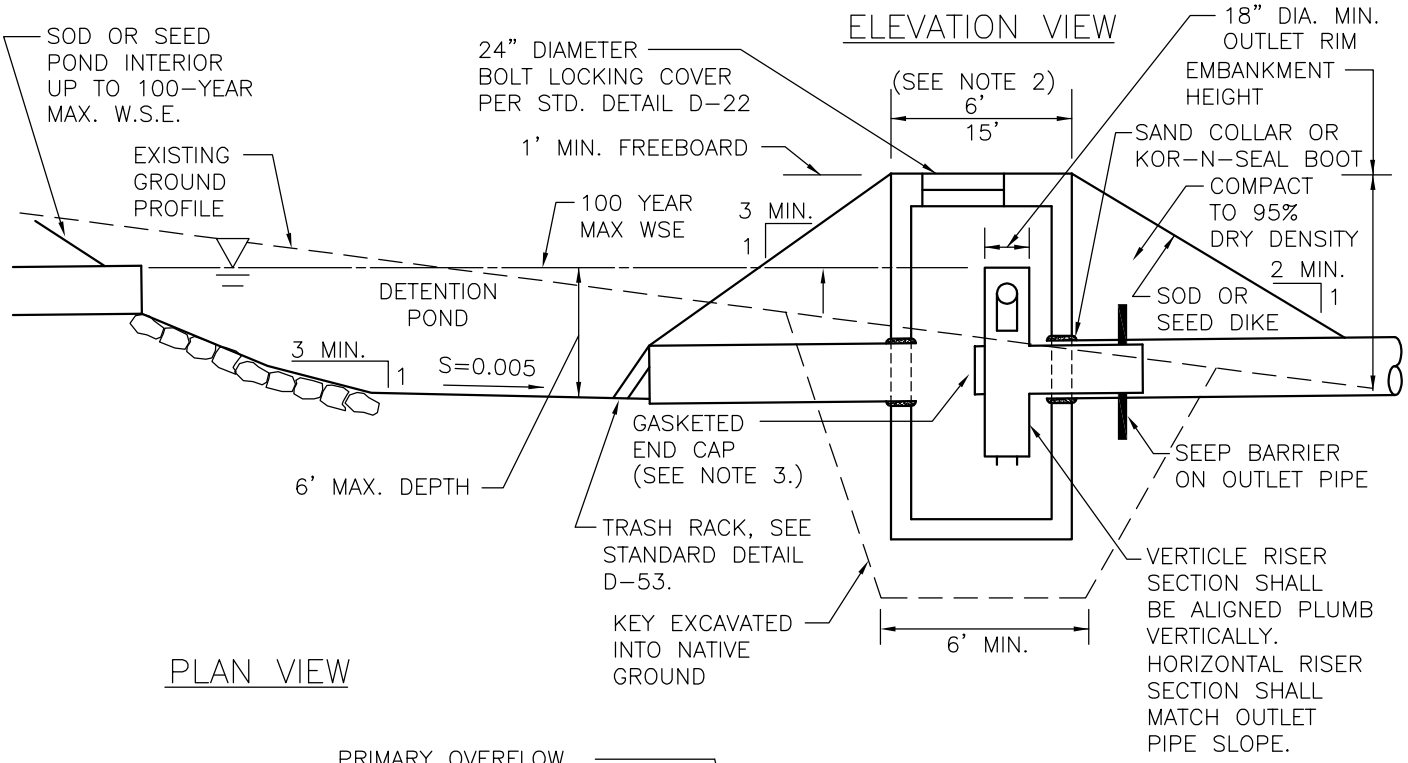

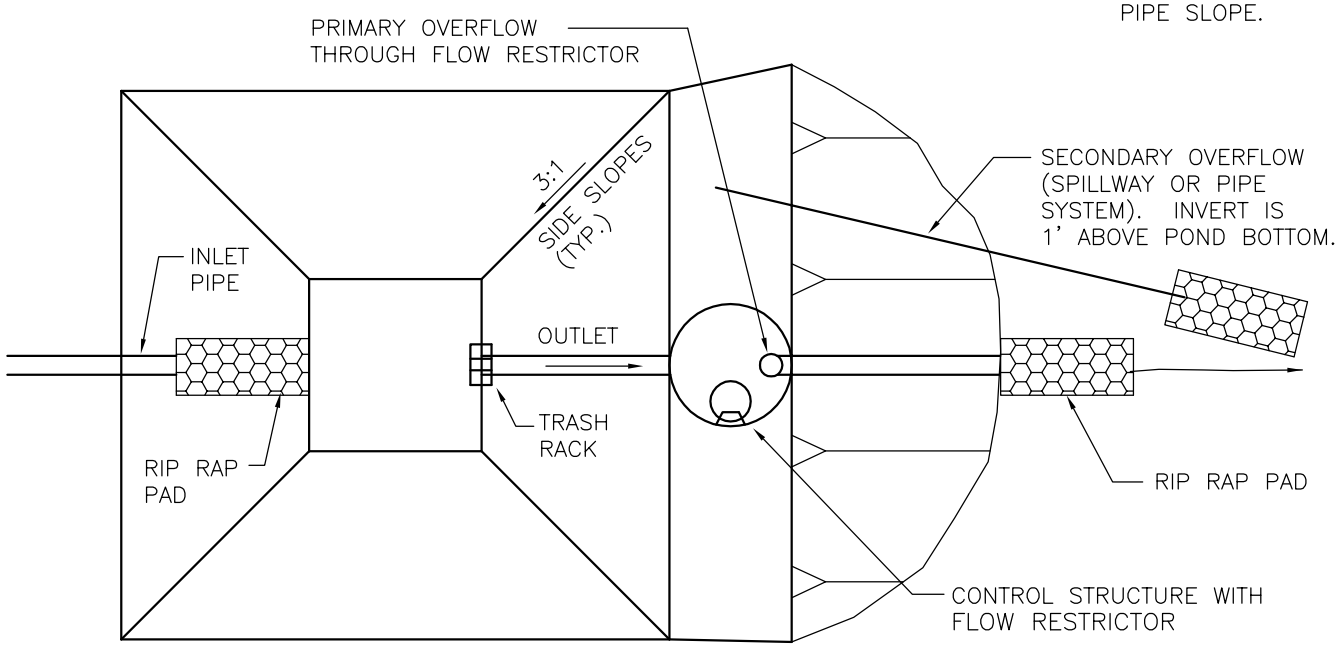

NOTES:

1. LANDSCAPE PLAN IS REQUIRED TO BEAUTIFY OR SCREEN POND.
2. 6' MINIMUM TOP WIDTH OF EMBANKMENT, 15' MINIMUM FOR VEHICLE ACCESS TO CONTROL STRUCTURE.
3. SCREW TYPE SHEAR GATE REQUIRED FOR ALL SYSTEMS TO BE MAINTAINED BY THE CITY.
4. CAPACITY OF OUTLET PIPE MUST BE EQUAL TO OR GREATER THAN DISCHARGE DURING EMERGENCY OVERFLOW CONDITION, IF PIPE OVERFLOW IS USED IN LIEU OF SPILLWAY, 8-INCH MINIMUM DIAMETER.
5. PENETRATE CARRIER PIPE THROUGH VAULT WALL.
6. USE APPROVED WATERTIGHT STRUCTURE ADAPTOR.
7. SLIP SMOOTH-BORE HORIZONTAL LEG OF FLOW CONTROL TEE INSIDE CARRIER PIPE.
8. NO FLOW CONTROL JOINT OUTSIDE OF STRUCTURE.

City of Bellevue

STORM AND SURFACE WATER UTILITY

TITLE

DRY DETENTION POND

NO. D-30

JANUARY 2014

NO SCALE

ELEVATION VIEW

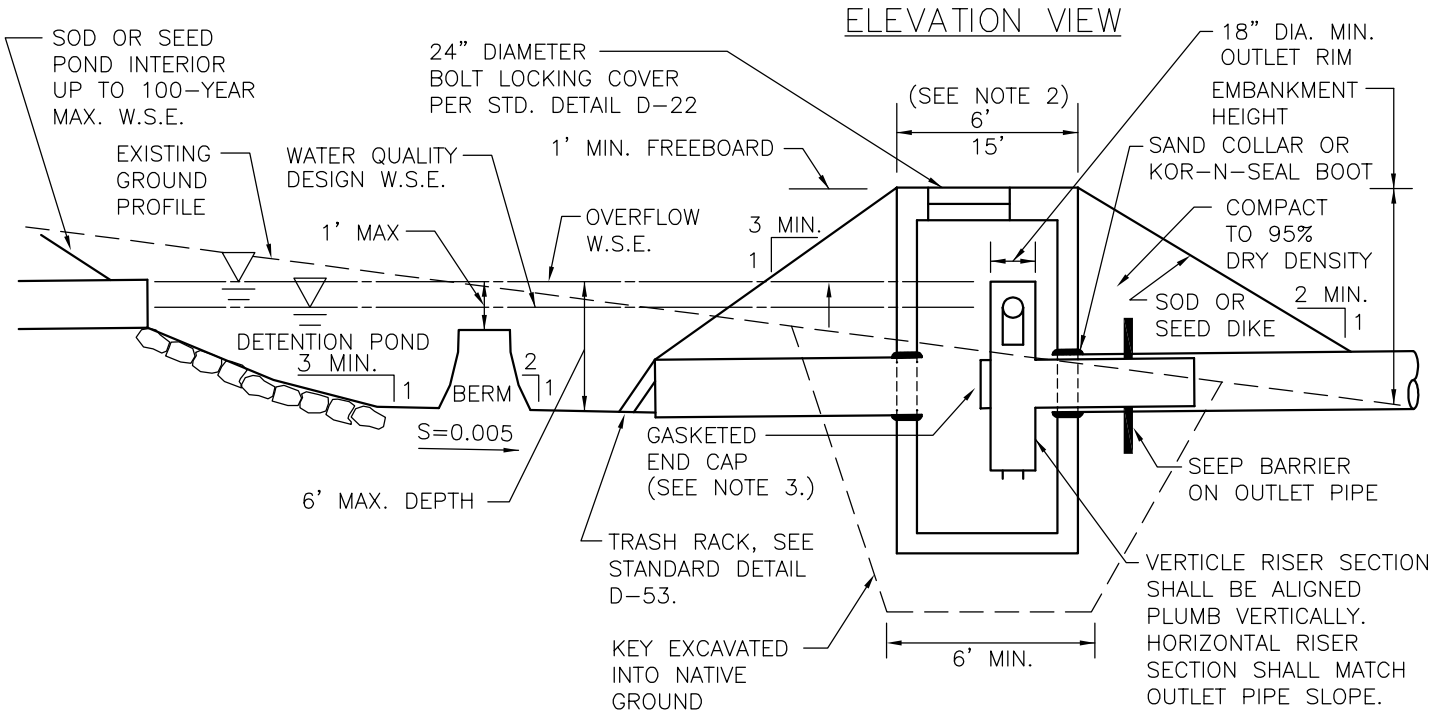

PLAN VIEW

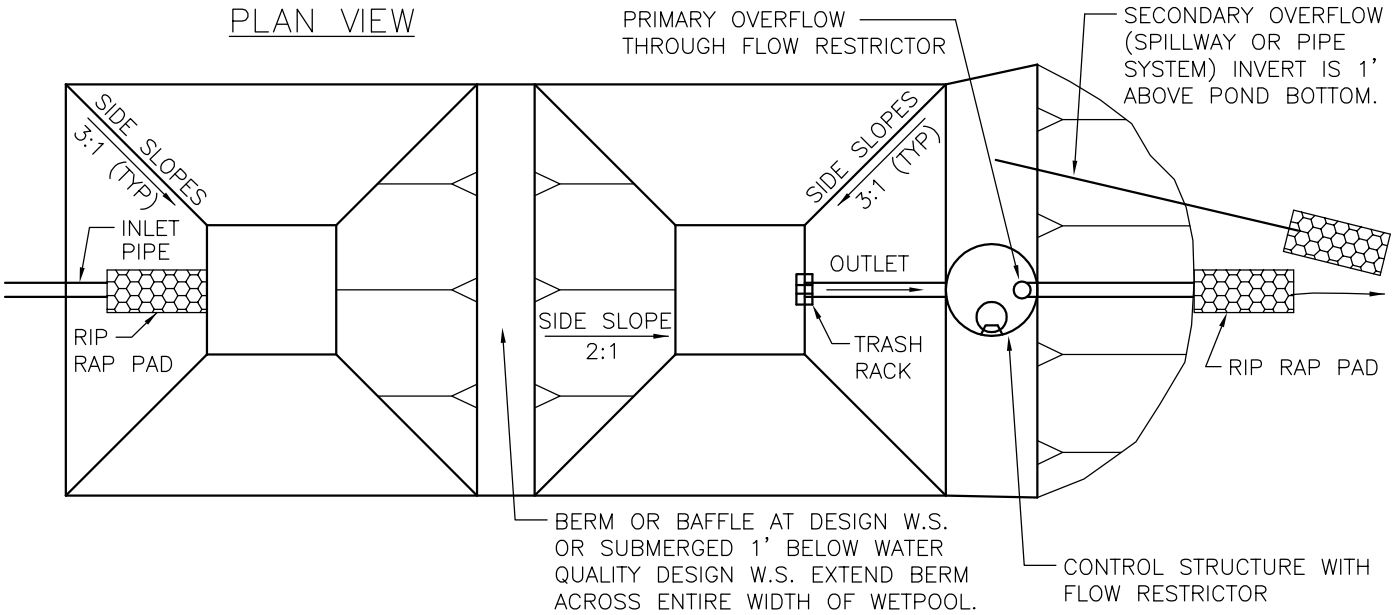

NOTES:

1. LANDSCAPE PLAN IS REQUIRED TO BEAUTIFY OR SCREEN POND.
2. 6' MINIMUM TOP WIDTH OF EMBANKMENT, 15' MINIMUM FOR VEHICLE ACCESS TO CONTROL STRUCTURE.
3. SCREW TYPE SHEAR GATE REQUIRED FOR ALL SYSTEMS TO BE MAINTAINED BY THE CITY.
4. CAPACITY OF OUTLET PIPE MUST BE EQUAL TO OR GREATER THAN DISCHARGE DURING EMERGENCY OVERFLOW CONDITION IF PIPE OVERFLOW IS USED IN LIEU OF SPILLWAY. 8-INCH MINIMUM DIAMETER.
5. BERM SLOPE MAY BE 2:1 WHEN TOP SUBMERGED 1' BELOW WATER QUALITY DESIGN W.S.E.
6. PENETRATE CARRIER PIPE THROUGH WALL.
7. USE APPROVED WATERTIGHT STRUCTURE ADAPTOR.
8. SLIP SMOOTH-BORE HORIZONTAL LEG OF FLOW CONTROL TEE INSIDE CARRIER PIPE.
9. NO FLOW CONTROL JOINT OUTSIDE OF STRUCTURE.

City of Bellevue

STORM AND SURFACE WATER UTILITY

TITLE

WATER QUALITY POND

JANUARY 2014

NO SCALE

NO. D-30A

ELEVATION VIEW

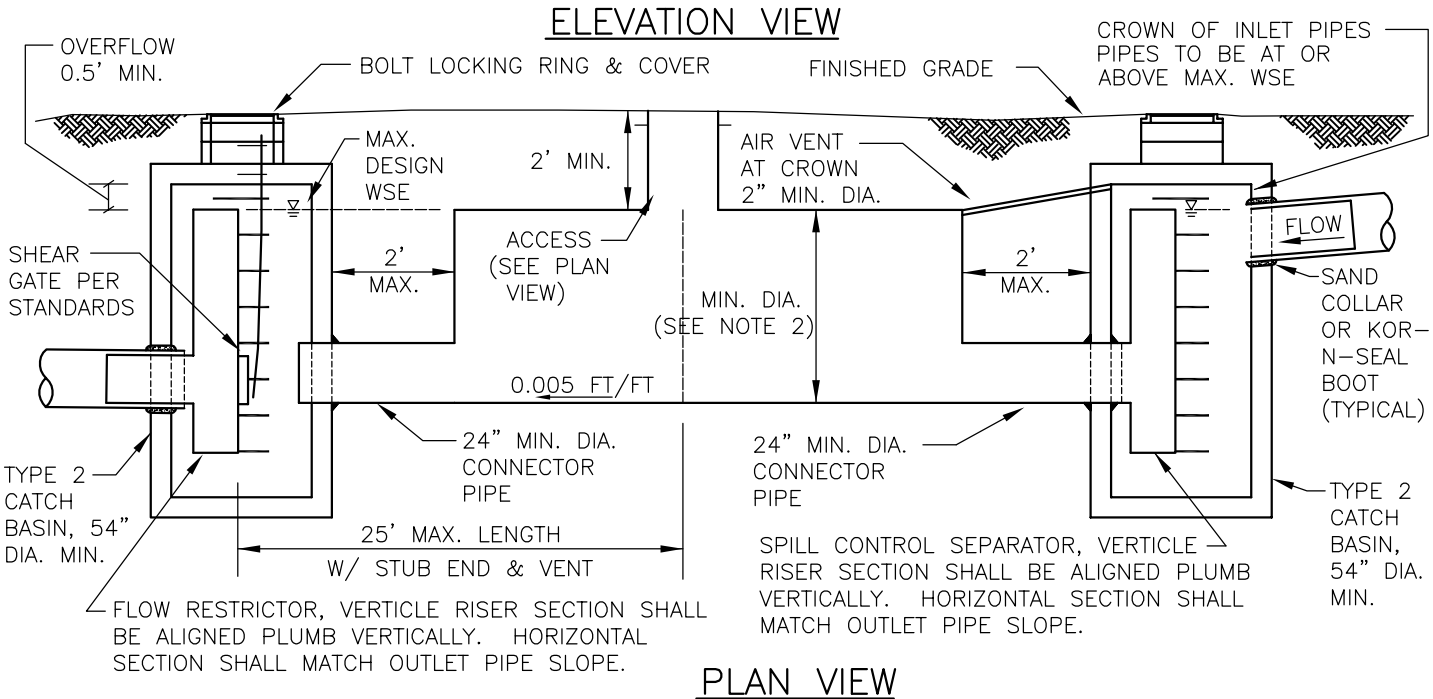

PLAN VIEW

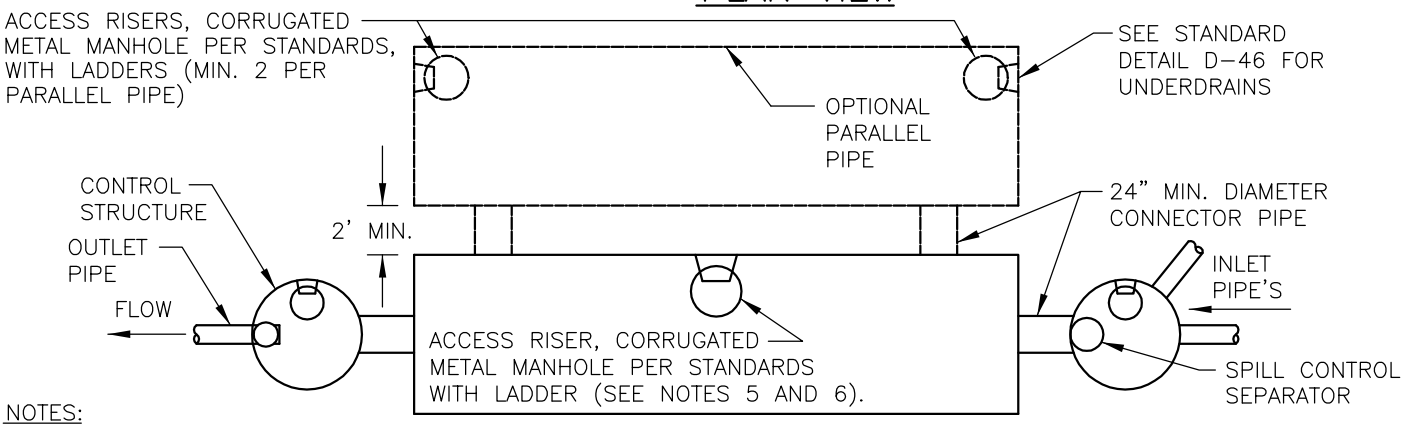

NOTES:

1. NEOPRENE GASKETS REQUIRED AT ALL CMP AND CPE PIPE JOINTS.
2. 36" MINIMUM PIPE DIAMETER. PROVIDE TYPE 2 CATCH BASIN AT EACH END OF PIPE (MAXIMUM SPACING SHALL BE 50 FEET).
3. ALL METAL PARTS AND SURFACES SHALL BE CORROSION RESISTANT. STEEL HARDWARE SHALL BE GALVANIZED. PIPE SHALL BE GALVANIZED, ASPHALT COATED (TREATMENT 1) OR ALUMINIZED. COMPLETE CORROSION PROTECTION MUST BE ASSURED.
4. CAPACITY OF OUTLET PIPE MUST BE EQUAL TO OR GREATER THAN ALL INLET PIPES COMBINED.
5. ACCESS RISERS REQUIRED CENTERED OVER EVERY 50' OF DETENTION PIPE WHEN TYPE 2 CATCH BASINS ARE PROVIDED ON EACH END, OR AT EITHER END OF A 50' LONG PARALLEL PIPE AS SHOWN ABOVE. ADDITIONAL ACCESSES ARE REQUIRED FOR EVERY 50 ADDITIONAL FEET OF DETENTION PIPE. SEE STANDARD DETAIL D-51 FOR ACCESS MANHOLE.
6. IN AREAS WITH VEHICULAR TRAFFIC, PROVIDE TRAFFIC BEARING ACCESS (HS-20) OVER CORRUGATED METAL MANHOLE, PER STANDARD DETAIL D-51.
7. BEDDING SHALL BE IN ACCORDANCE WITH DETAIL D-46 "FLEXIBLE PIPE BENDING".
8. PENETRATE CARRIER PIPE THROUGH VAULT WALL.
9. USE APPROVED WATERTIGHT STRUCTURE ADAPTOR.
10. SLIP SMOOTH-BORE HORIZONTAL LEG OF FLOW CONTROL TEE INSIDE CARRIER PIPE.
11. NO FLOW CONTROL JOINT OUTSIDE OF STRUCTURE.
12. PRIOR TO STARTUP, DETENTION PIPE SHALL PASS 1% PER DAY LEAK TEST WHERE A MAXIMUM OF 1% WATER LOSS IS ALLOWED WITHIN A 24-HOUR PERIOD WITH VAULT FILLED TO 2-YEAR STORM ELEVATION. TEST PER THE 2009 UNIFORM PLUMBING CODE 712.2.

JANUARY 2014 NO SCALE

City of Bellevue

STORM AND SURFACE WATER UTILITY

TITLE

DETENTION PIPE

NO. D-31

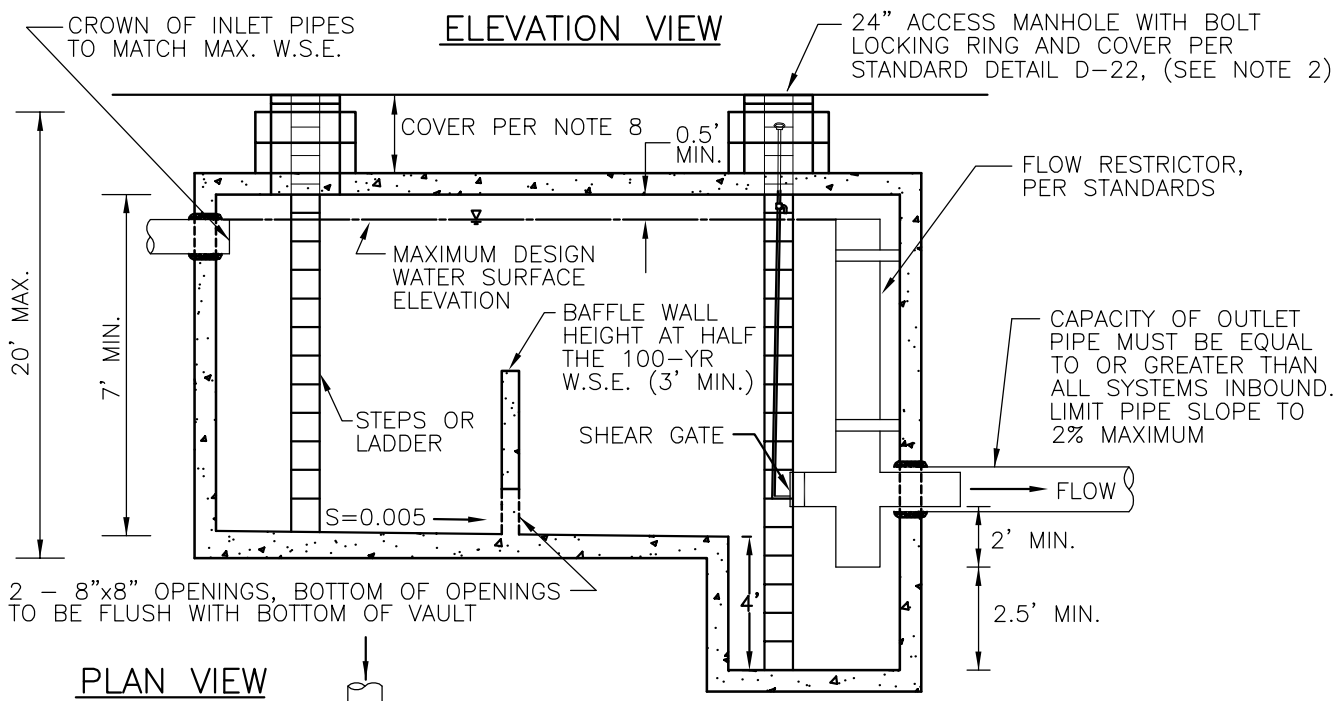

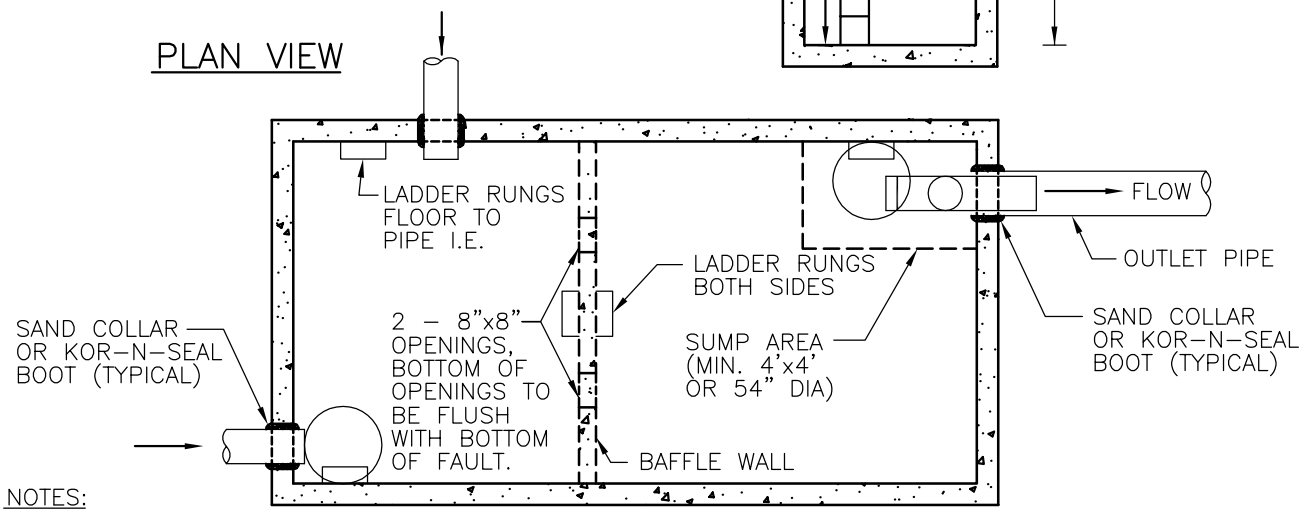

NOTES:

1. BAFFLE WALL TO DIVIDE VAULT INTO TWO APPROXIMATELY EQUAL SIZE CELLS.
2. MINIMUM ONE ACCESS MANHOLE PER CELL WITH AT LEAST ONE ACCESS PER 50' VAULT LENGTH OR WIDTH.
3. PRE-CAST VAULTS SHALL HAVE APPROVED RUBBER GASKET SYSTEM.
4. VAULT SHALL BE DESIGNED AND STAMPED BY A REGISTERED STRUCTURAL ENGINEER. VAULT SHALL BE DESIGNED FOR HS-20 TRAFFIC LOADINGS, MINIMUM.
5. ALL METAL PARTS SHALL BE CORROSION RESISTANT.
6. PROVIDE LADDER RUNGS IMMEDIATELY ADJACENT TO ALL INLET/OUTLET PIPES.
7. ALL INLETS TO FIRST CELL.
8. IF PROPOSED COVER IS GREATER THAN 1', THEN IT MUST BE 3' MINIMUM AND ACCESS MUST BE A 48" ECCENTRIC CONE SET OVER A 24" DIAMETER ACCESS OPENING.
9. APPLY NON-SHRINK GROUT TO INSIDE AND OUTSIDE OF ALL JOINTS, RINGS, RISERS AND FRAMES.
10. ALL PIPES SHALL BE PREPENDICULAR TO FACE OF VAULT.
11. PENETRATE CARRIER PIPE THROUGH VAULT WALL.
12. USE APPROVED WATERTIGHT STRUCTURE ADAPTOR.
13. SLIP SMOOTH-BORE HORIZONTAL LEG OF FLOW CONTROL TEE INISIDE CARRIER PIPE.
14. NO FLOW CONTROL JOINT OUTSIDE OF STRUCTURE.
15. PRIOR TO STARTUP, DETENTION VAULT SHALL PASS 1% PER DAY LEAK TEST WHERE A MAXIMUM OF 1% WATER LOSS IS ALLOWED WITHIN A 24-HOUR PERIOD WITH VAULT FILLED TO 2-YEAR STORM ELEVATION. TEST PER THE 2009 UNIFORM PLUMBING CODE 712.2.

JANUARY 2014 NO SCALE

City of Bellevue

STORM AND SURFACE WATER UTILITY

TITLE

DETENTION VAULT

NO. D-32

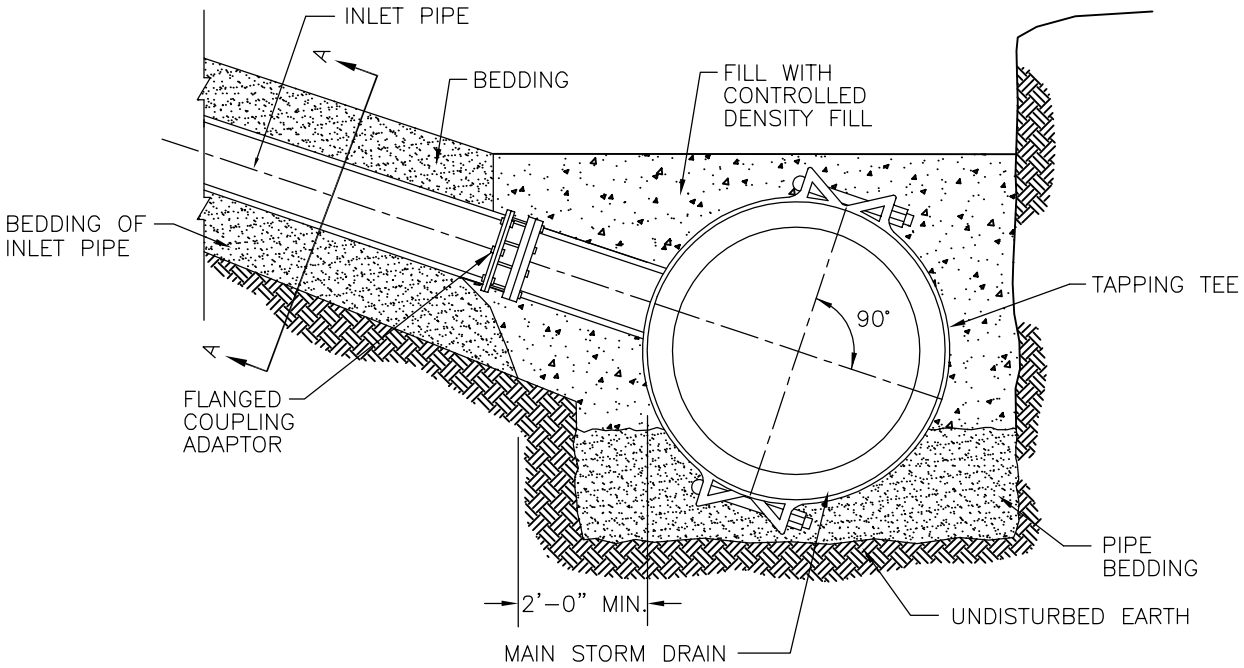

ELEVATION VIEW

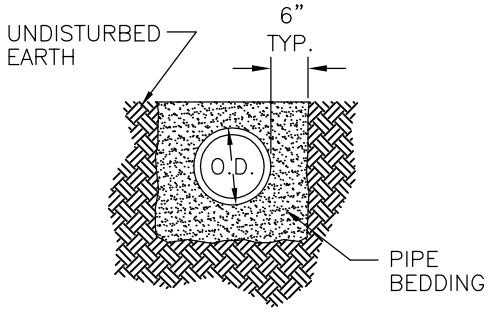

SECTION A–A

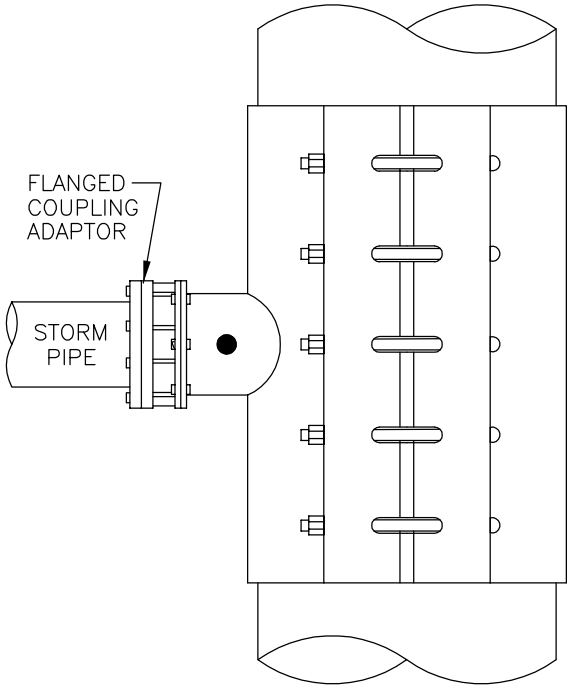

PLAN VIEW

NOTES:

1. "D", THE INSIDE DIAM. OF THE INLET PIPE, SHALL BE 8" OR LESS. FOR LARGER VALUES OF "D", USE A MANHOLE OR CATCH BASIN.
2. IN NO CASE SHALL THE OUTSIDE DIAM. OF THE INLET PIPE EXCEED ONE–HALF THE INSIDE DIAM. OF THE MAIN STORM DRAIN PIPE.
3. ℄ OF INLET PIPE SHALL BE ON RADIUS OF MAIN STORM DRAIN.
4. THE MIN. OPENING INTO THE EXISTING STORM DRAIN SHALL BE THE OUTSIDE DIAM. OF THE INLET PIPE PLUS 1 IN.
5. MAINLINE SHALL HAVE 12" MIN. DIAM.
6. STAINLESS STEEL TAPPING TEES SHALL HAVE FULL CIRCLE SEAL. BOLTS AND NUTS SHALL BE STAINLESS STEEL.
7. ALL TEES TO BE WATER TESTED BEFORE TAP.
8. TAPPING TEE MAY BE SIZE ON SIZE. TAP SHALL BE AT LEAST 2" SMALLER DIAMETER THAN THE EXISTING STORM MAIN.

JANUARY 2014 NO SCALE

City of Bellevue

STORM AND SURFACE WATER UTILITY

TITLE

TAPPING TEES FOR DRAIN PIPE

NO. D–33

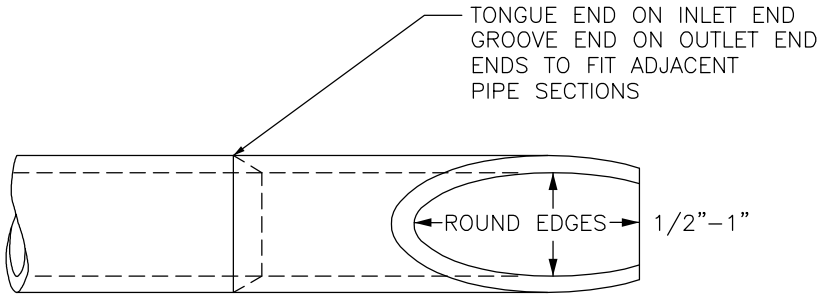

PLAN

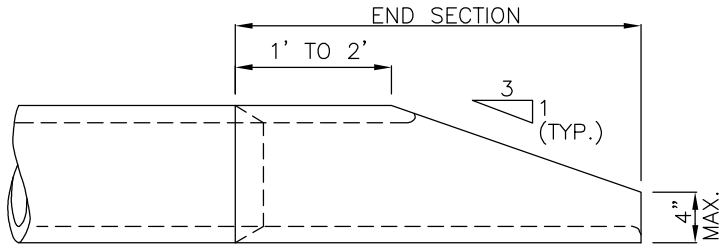

ELEVATION

CONCRETE PIPE

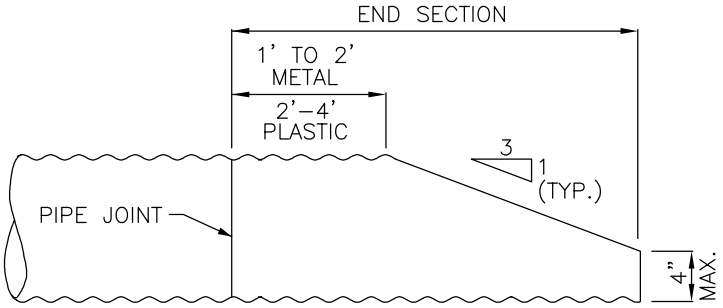

ELEVATION

METAL & THERMO–PLASTIC PIPE

NOTE:

1. SIDE SLOPE SHALL BE WARPED TO MATCH THE BEVELED PIPE END. WHEN CULVERT IS ON SKEW, BEVELED END SHALL BE ROTATED TO CONFORM TO SLOPE. IF SLOPE DIFFERS FROM 3:1, PIPE SHALL BE BEVELED TO MATCH SLOPE.

City of Bellevue

STORM AND SURFACE WATER UTILITY

TITLE

BEVELED END PIPE SECTION

JANUARY 2014

NO SCALE

NO. D–34

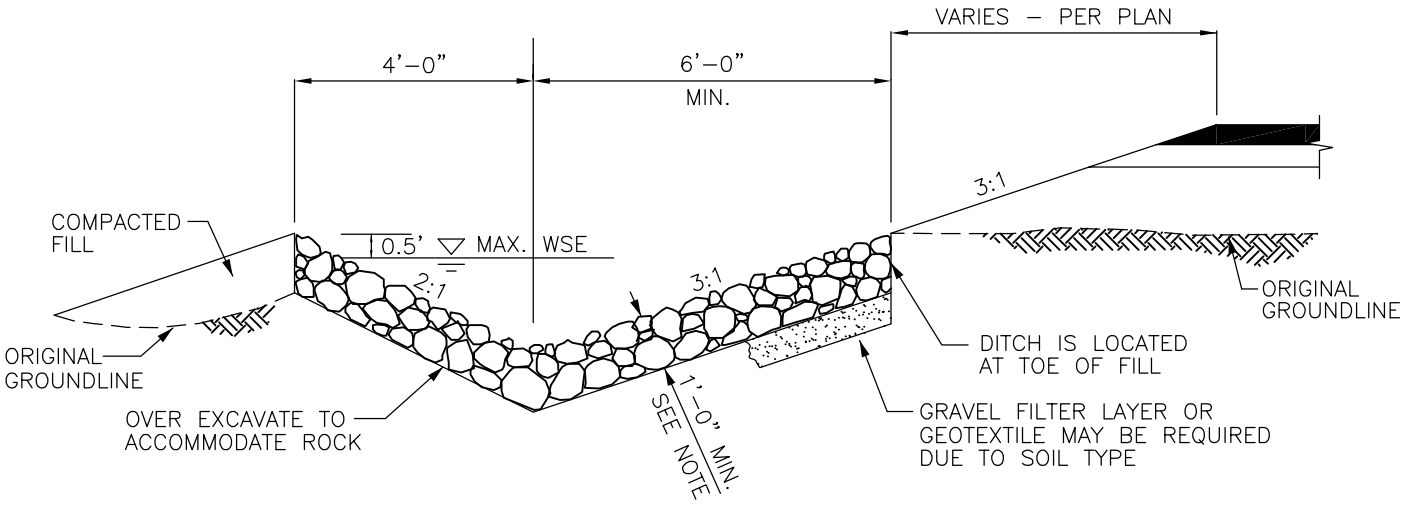

ROCK–LINED SHOULDER DITCH
IN FILL SECTION

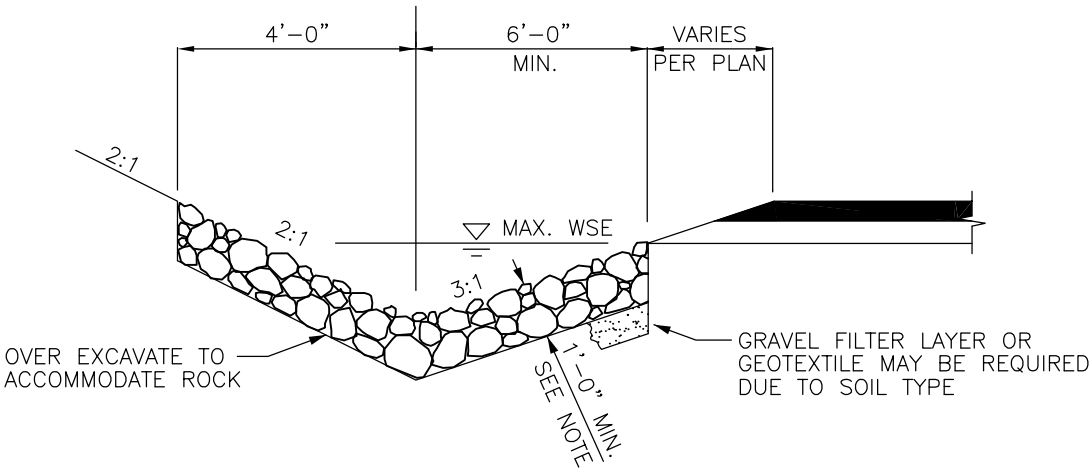

ROCK–LINED SHOULDER DITCH
IN CUT SECTION

NOTES:

1. ROCK LINED DITCHES TO BE USED WHEN FLOW VELOCITIES EXCEED 4 FPS.
2. ROCK SIZE AND DEPTH DEPENDENT ON FLOW VELOCITY. MINIMUM ROCK SIZE 2"–4" QUARRY SPALLS.

City of Bellevue

STORM AND SURFACE WATER UTILITY

TITLE

ROCK–LINED DITCHES

JANUARY 2014

NO SCALE

NO. D–35

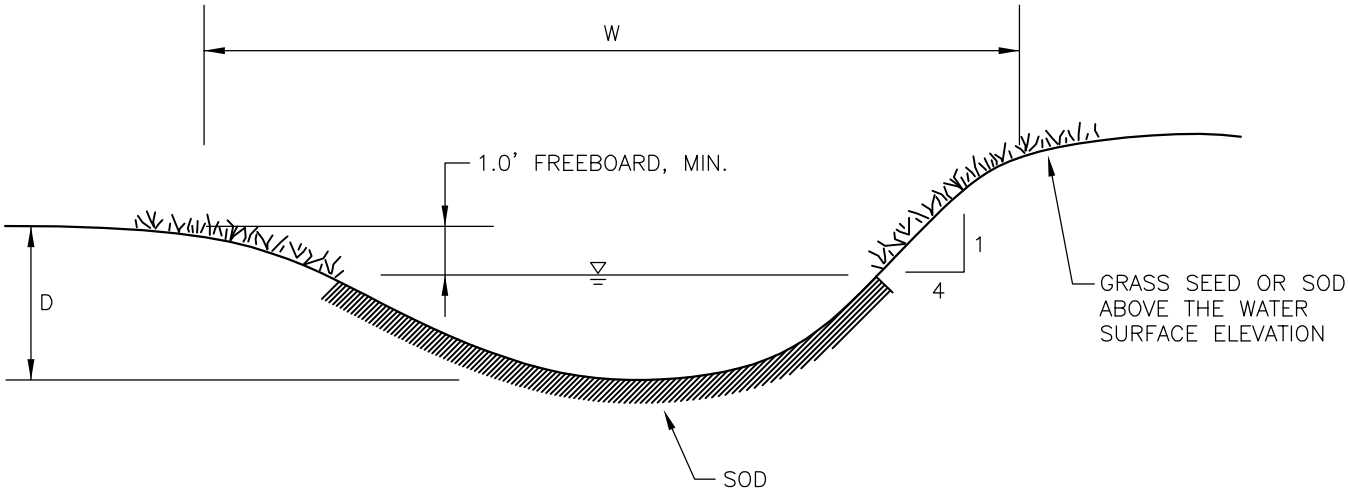

TYPICAL SECTION

NOTES:

1. D, W SIZED TO ACCOMMODATE DESIGN FLOW.
2. ROUND ALL CORNERS FOR EASE OF MOWING.
3. MAXIMUM DESIGN VELOCITY SHALL BE 4 F.P.S.
4. LOCATE ALL SEDIMENT TRAPS FOR EASE OF MAINTENANCE.

City of Bellevue

STORM AND SURFACE WATER UTILITY

TITLE

GRASS-LINED DITCH

JANUARY 2014

NO SCALE

NO. D-36

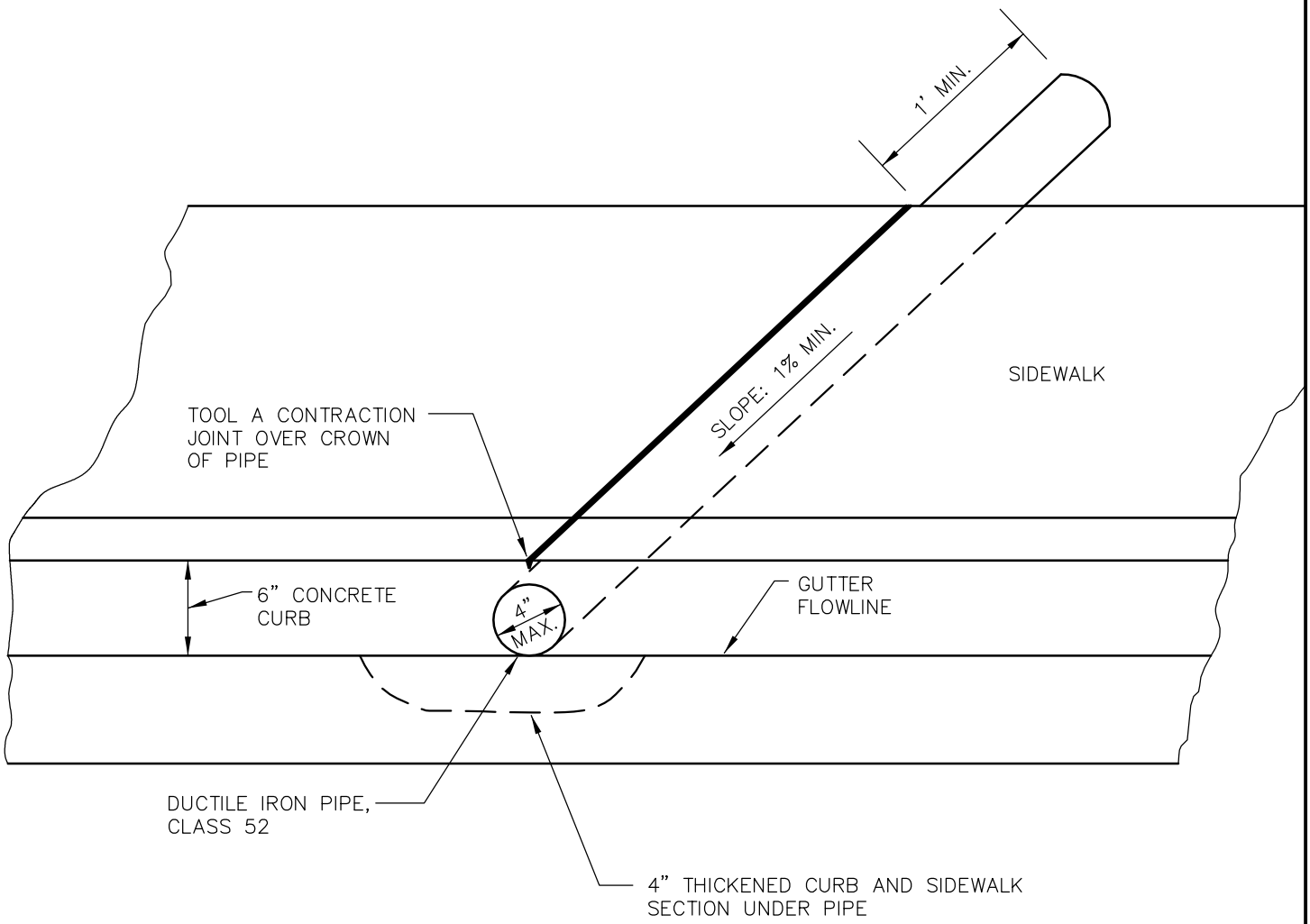

NOTES:

1. SINGLE FAMILY RESIDENTIAL CONSTRUCTION ONLY.
2. REQUIRES RIGHT-OF-WAY APPROVAL.
3. PIPE AND CONTRACTION JOINT RUN PERPENDICULAR TO SIDEWALK.

City of Bellevue

STORM AND SURFACE WATER UTILITY

TITLE

SIDEWALK DRAIN

JANUARY 2014

NO SCALE

NO. D-37

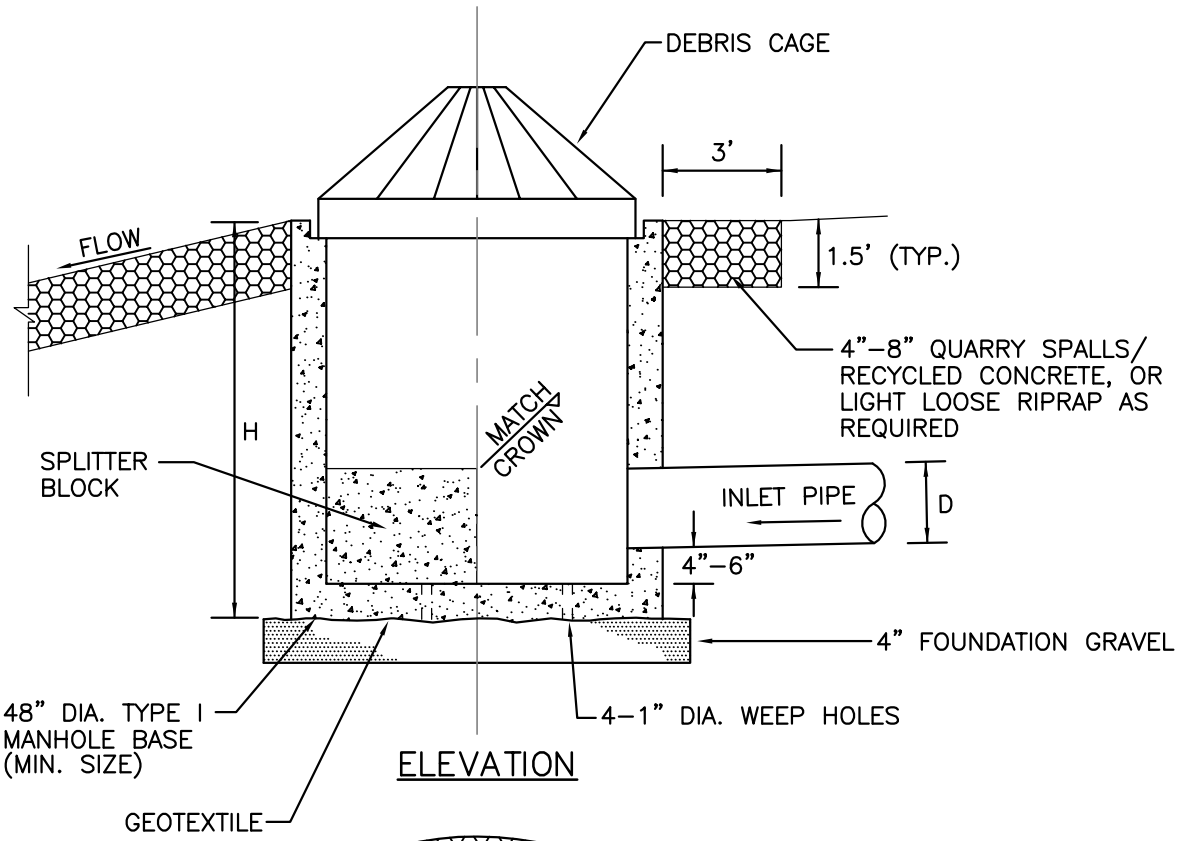

ELEVATION

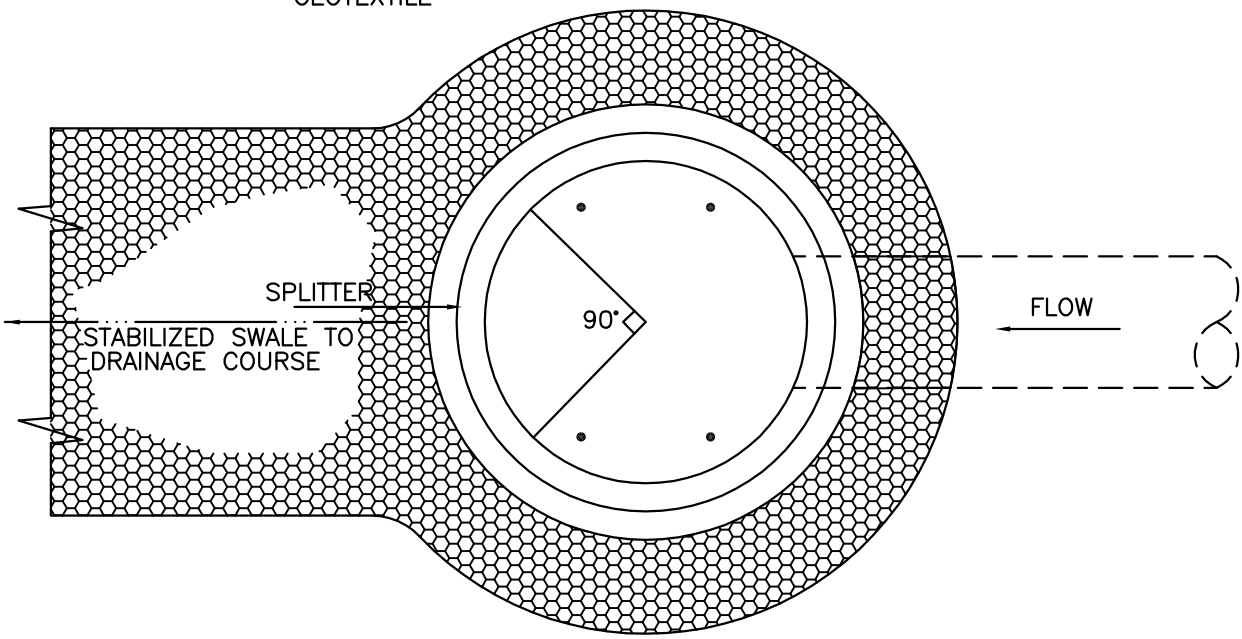

PLAN

INLET PIPE SIZE "D"	BASE HEIGHT "H"
8"	2'
12"	3'
18"	3'
24"	4'

City of Bellevue

STORM AND SURFACE WATER UTILITY

TITLE

ENERGY DISSIPATOR

JANUARY 2014

NO SCALE

NO. D–38

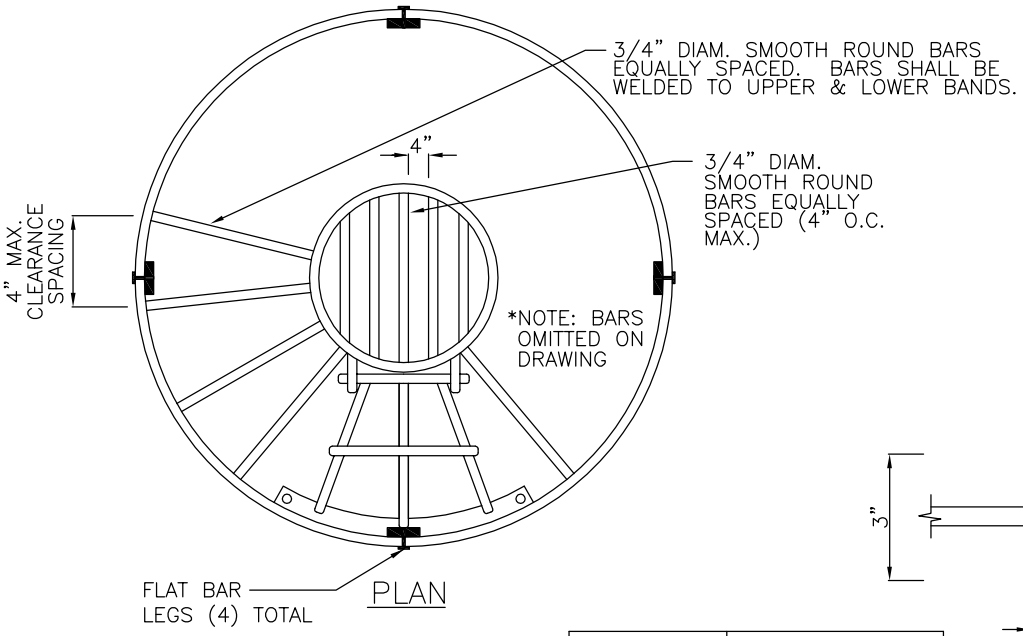

PLAN

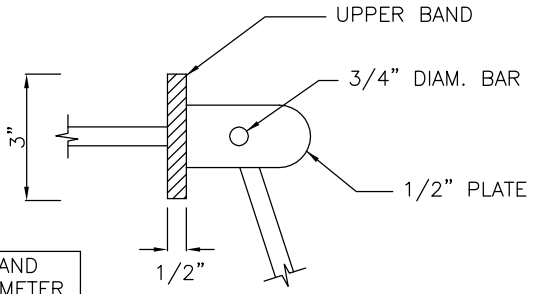

MH	UPPER BAND OUTER DIAMETER
48",54"	36"
60",72"	42"
96"	48"

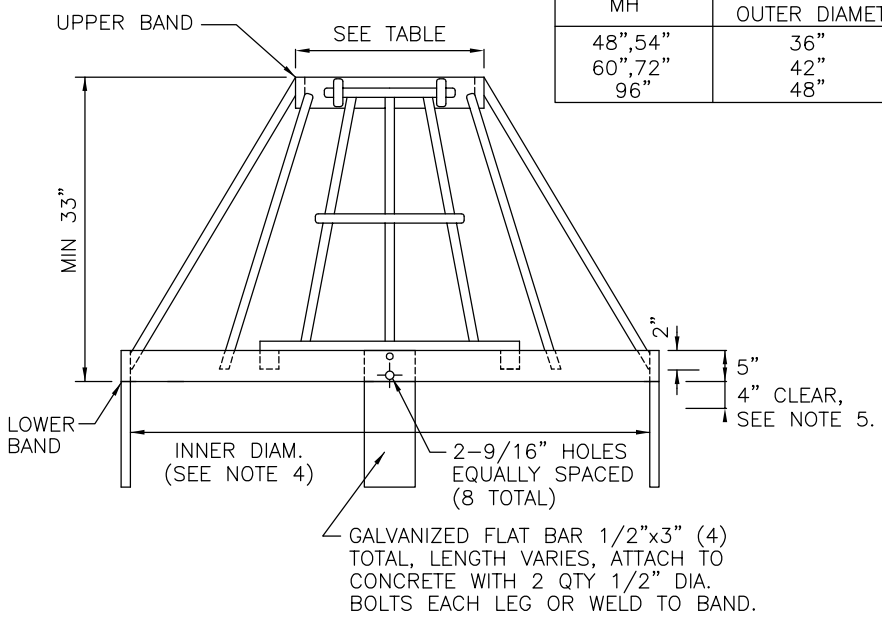

ELEVATION

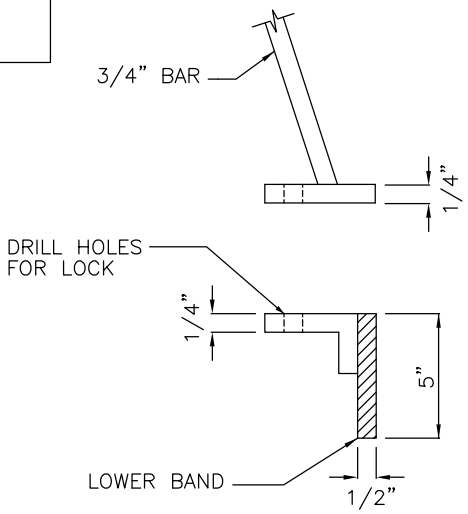

ENTRY GATE DETAIL

NOTES:

1. ALL STEEL IN PLATES, BARS AND BANDS SHALL CONFORM TO THE REQUIREMENTS OF ASTM A36.
2. STEEL DEBRIS CAGE SHALL BE HOT-DIP GALVANIZED IN ACCORDANCE WITH ASTM A123 (AASHTO M111).
3. ALUMINUM IS AN OPTIONAL CAGE MATERIAL AND MUST BE BOLTED TO THE CONCRETE STRUCTURE.
4. LOWER BAND DIMENSIONS TO MATCH STRUCTURE.
5. PROVIDE 4" CLEARANCE BETWEEN LOWER BAND AND THE TOP OF THE CONCRETE STRUCTURE.

City of Bellevue

STORM AND SURFACE WATER UTILITY

TITLE

DEBRIS CAGE

JANUARY 2014

NO SCALE

NO. D-39

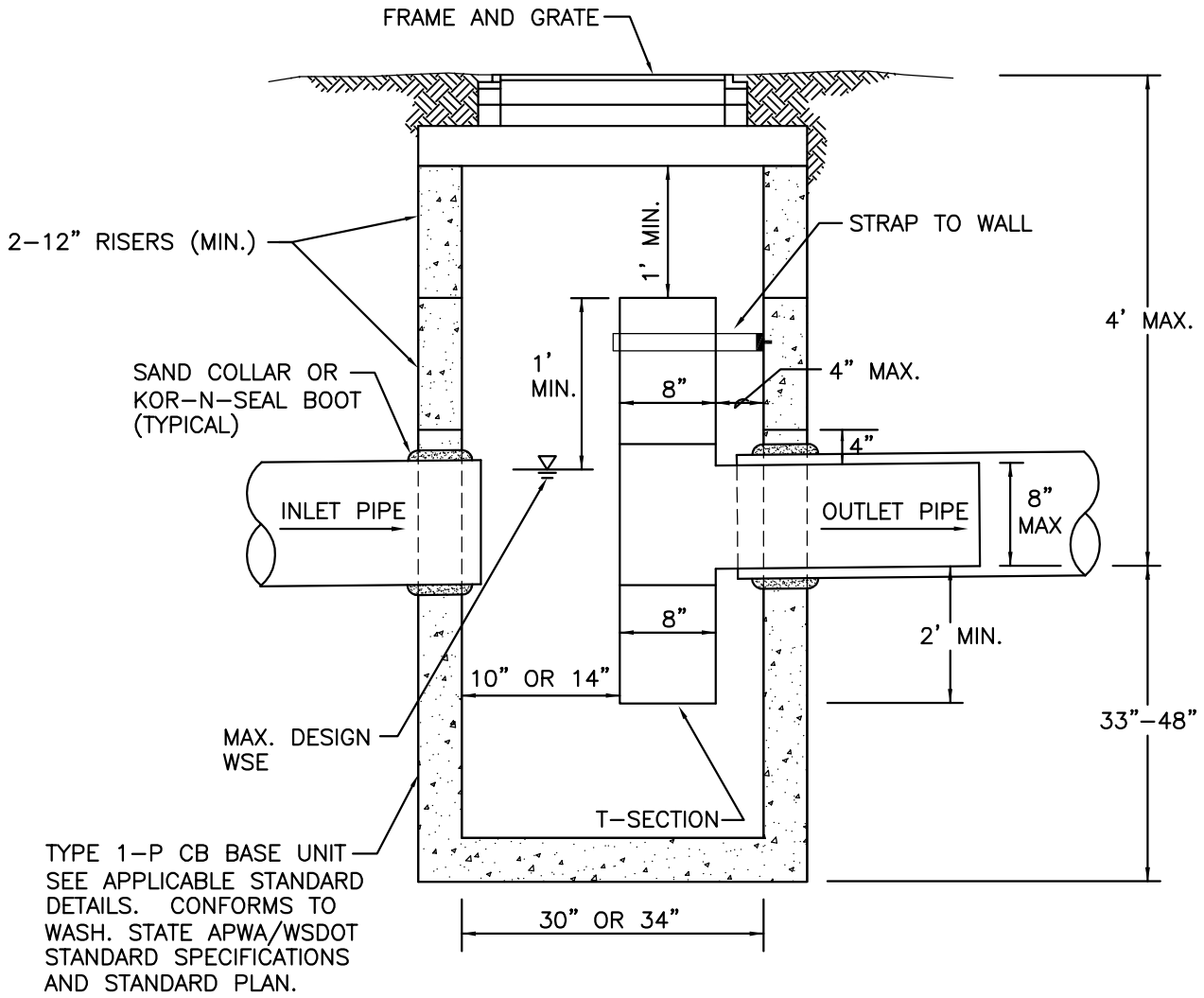

NOTES:

1. MAX. OUTLET PIPE DIAMETER IS 8 INCHES. VERTICAL RISER SECTION SHALL BE ALIGNED PLUMB VERTICALLY. HORIZONTAL RISER SECTION SHALL MATCH OUTLET PIPE SLOPE.
2. ALL METAL PARTS AND SURFACES MUST BE CORROSION RESISTANT. STEEL HARDWARE SHALL BE GALVANIZED. PIPES SHALL BE GALVANIZED, ASPHALT COATED (TREATMENT 1) OR ALUMINIZED. COMPLETE CORROSION PROTECTION MUST BE ASSURED.
3. APPLY NON–SHRINK GROUT TO INSIDE AND OUTSIDE OF ALL JOINTS, RINGS, RISERS AND FRAMES.
4. PENETRATE CARRIER PIPE THROUGH WALL.
5. USE APPROVED WATERTIGHT STRUCTURE ADAPTOR.
6. SLIP SMOOTH–BORE HORIZONTAL LEG OF FLOW CONTROL TEE INSIDE CARRIER PIPE.
7. NO FLOW CONTROL JOINT OUTSIDE OF STRUCTURE.

JANUARY 2014 NO SCALE

City of Bellevue

STORM AND SURFACE WATER UTILITY

TITLE

SPILL CONTROL (SC) SEPARATOR
TYPE I

NO. D–42

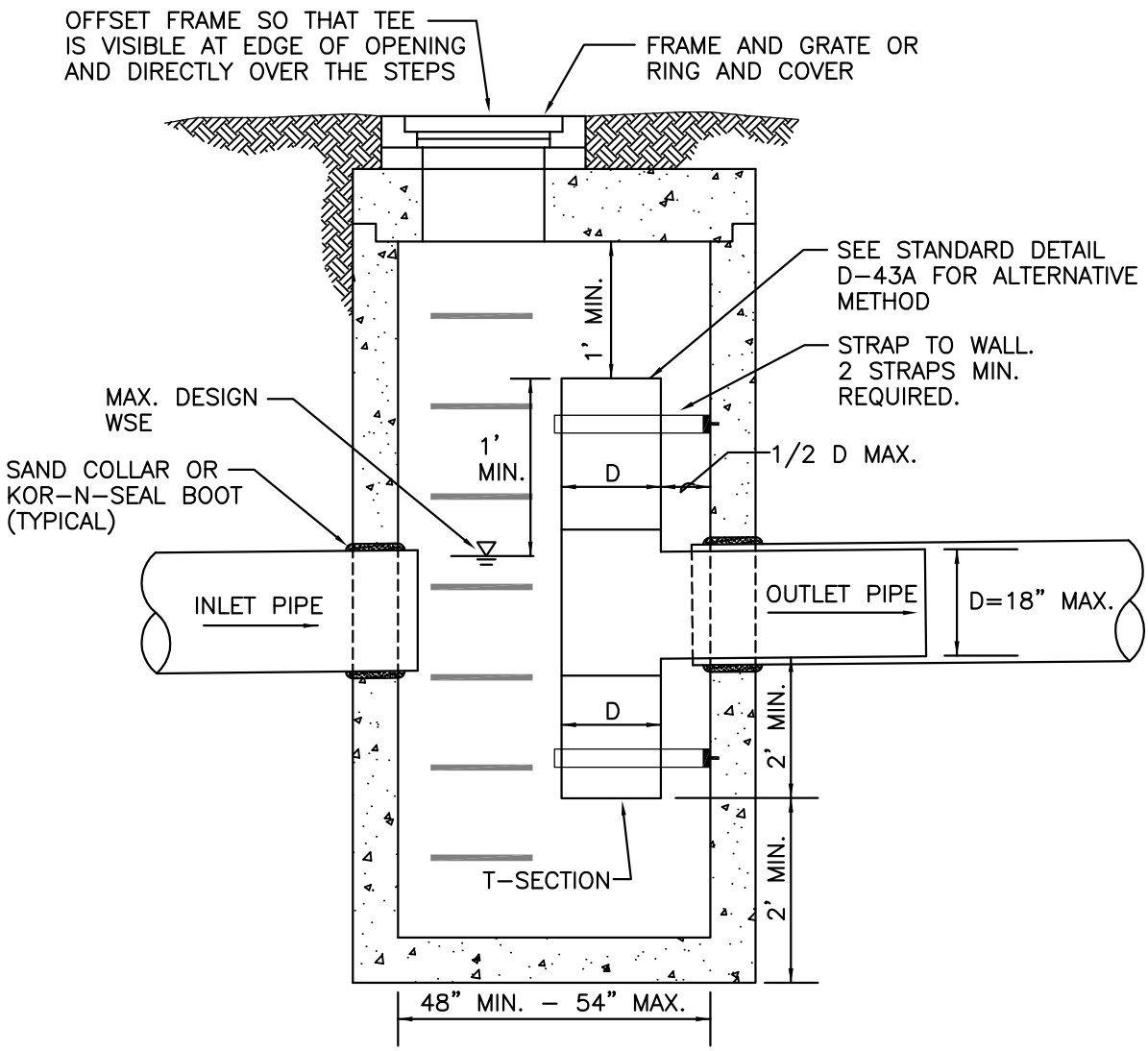

NOTES:

1. MAX. OUTLET PIPE DIAMETER IS 18 INCHES. VERTICAL RISER SECTION SHALL BE ALIGNED PLUMB VERTICALLY. HORIZONTAL SECTION SHALL MATCH OUTLET PIPE SLOPE.
2. ALL METAL PARTS AND SURFACES MUST BE CORROSION RESISTANT. STEEL HARDWARE SHALL BE GALVANIZED. PIPES SHALL BE GALVANIZED, ASPHALT COATED (TREATMENT 1) OR ALUMINIZED. COMPLETE CORROSION PROTECTION MUST BE ASSURED.
3. APPLY NON-SHRINK GROUT TO INSIDE AND OUTSIDE OF JOINTS, RINGS, RISERS AND FRAMES.
4. PENETRATE CARRIER PIPE THROUGH VAULT WALL.
5. USE APPROVED WATERTIGHT STRUCTURE ADAPTOR.
6. SLIP SMOOTH-BORE HORIZONTAL LEG OF FLOW CONTROL TEE INSIDE CARRIER PIPE.
7. NO FLOW CONTROL JOINT OUTSIDE OF STRUCTURE.

OUTLET PIPE DIA. "D"	STRUCTURE TYPE
12"	TYPE 2 CB-48"
18"	TYPE 2 CB-54"

City of Bellevue

STORM AND SURFACE WATER UTILITY

TITLE

SPILL CONTROL (SC) SEPARATOR TYPE 2

JANUARY 2014

NO SCALE

NO. D-43

SECTION VIEW

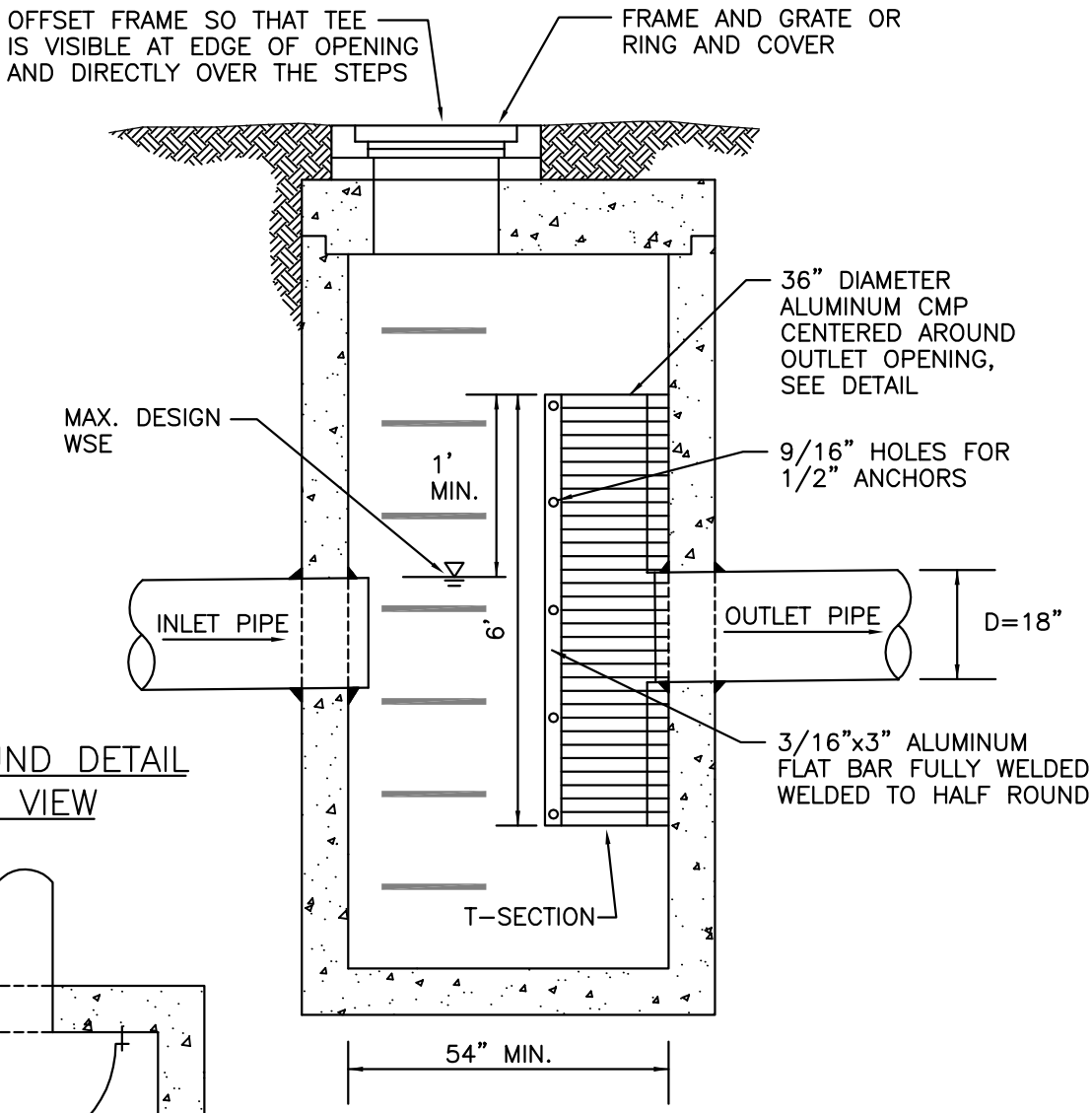

HALF ROUND DETAIL
PLAN VIEW

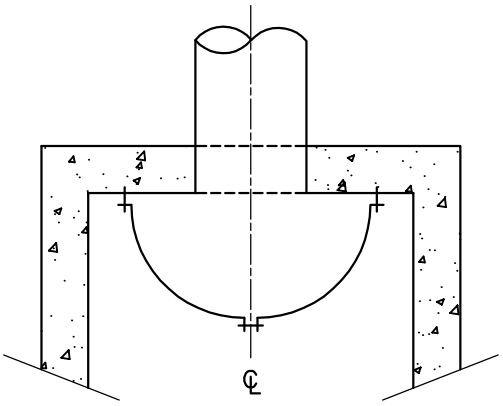

NOTES:

1. ALL METAL PARTS AND SURFACES MUST BE CORROSION RESISTANT. STEEL HARDWARE SHALL BE GALVANIZED. PIPES SHALL BE GALVANIZED, ASPHALT COATED (TREATMENT 1) OR ALUMINIZED. COMPLETE CORROSION PROTECTION MUST BE ASSURED.
2. APPLY NON-SHRINK GROUT TO INSIDE AND OUTSIDE OF JOINTS, RINGS, RISERS AND FRAMES.
3. TYPE 3 SC SEPARATOR CAN BE USED AS AN ALTERNATE TO STANDARD DETAIL D-43 SC SEPARATOR TYPE 2 WHEN A TYPE 2 WILL NOT WORK DUE TO EXISTING CONSTRAINTS.
3. FASTEN HALF ROUND TO CATCH BASIN WALL QUICK BOLTS.

City of Bellevue

STORM AND SURFACE WATER UTILITY

TITLE

SPILL CONTROL (SC) SEPARATOR TYPE 3

JANUARY 2014

NO SCALE

NO. D-43A

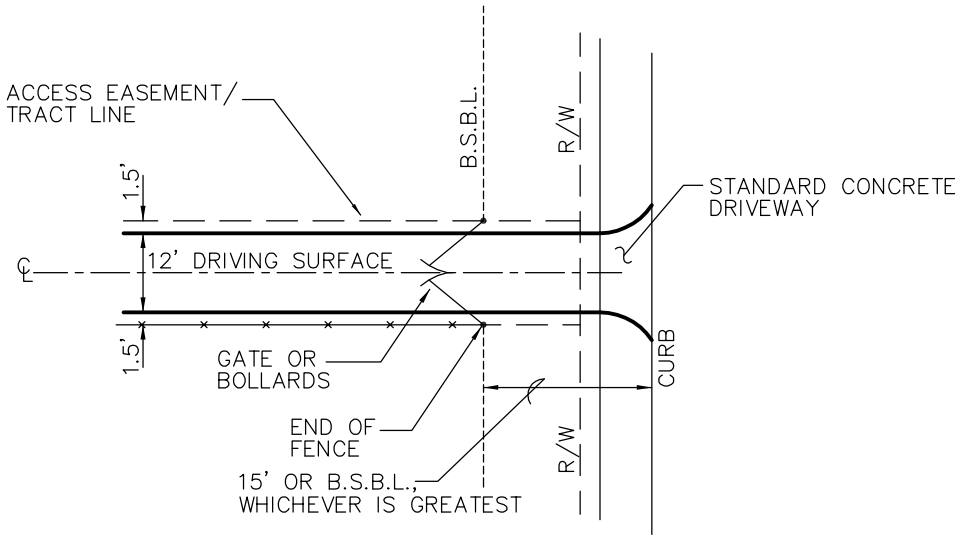

DRIVEWAY ENTRANCE

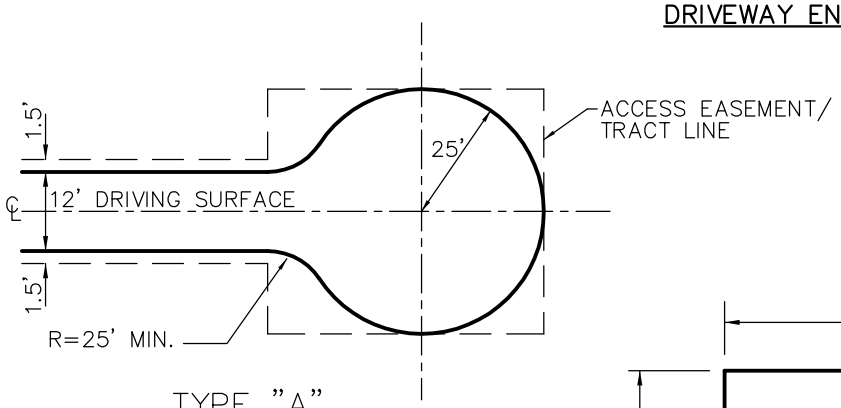

TYPE "A"
TURNAROUND

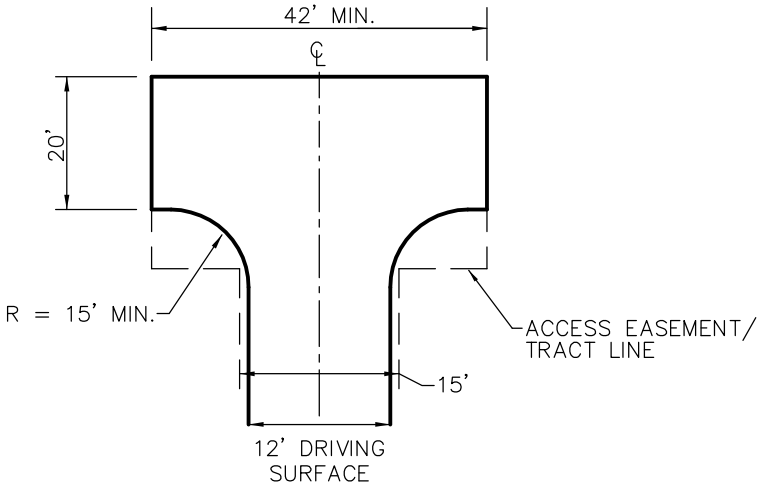

HAMMERHEAD

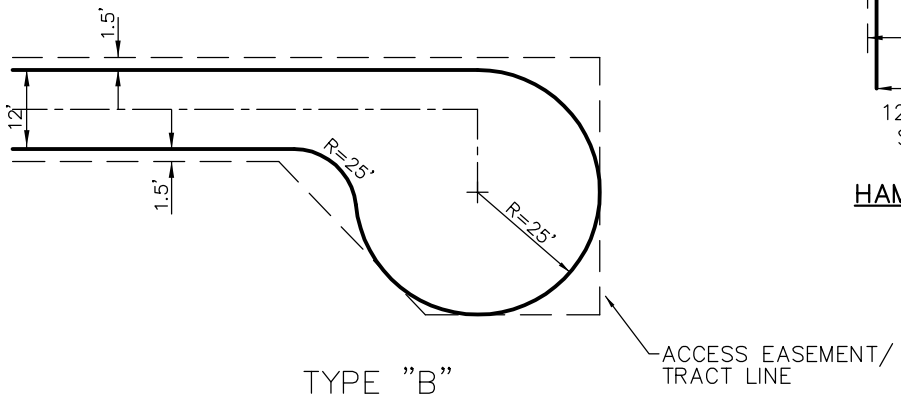

TYPE "B"
TURNAROUND

City of Bellevue

STORM AND SURFACE WATER UTILITY

TITLE

DRAINAGE FACILITY
MAINTENANCE ACCESS

JANUARY 2014

NO SCALE

NO. D-44

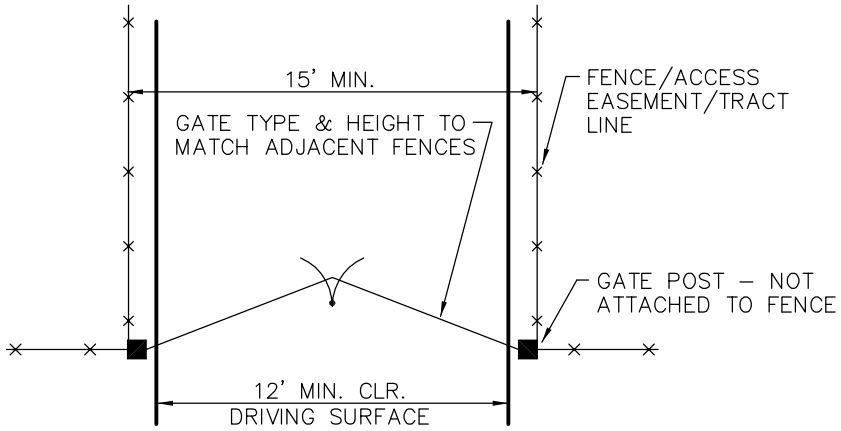

GATE PLACEMENT

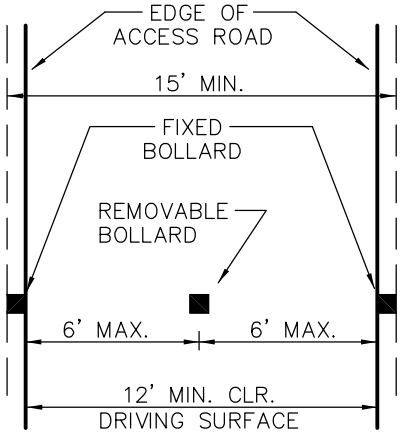

BOLLARD PLACEMENT

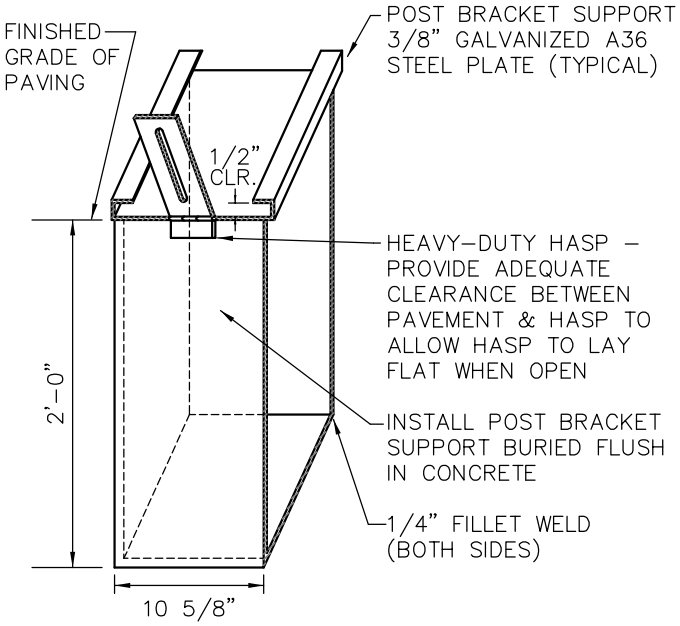

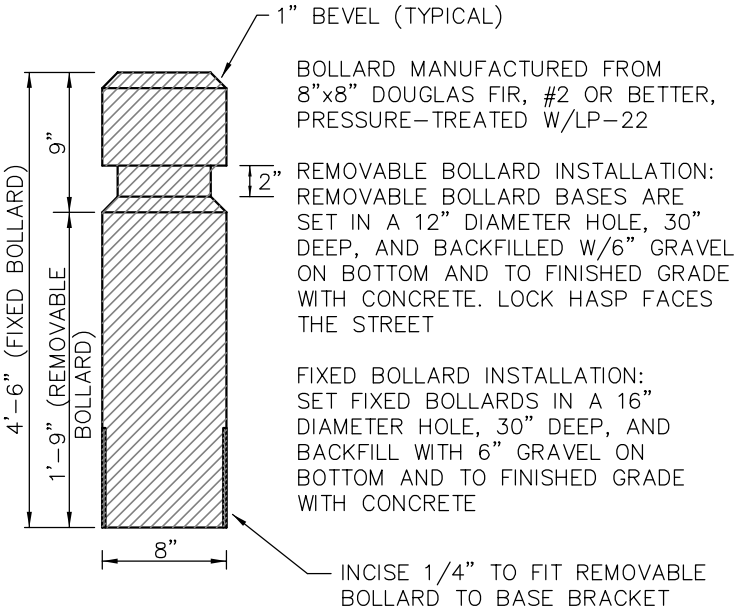

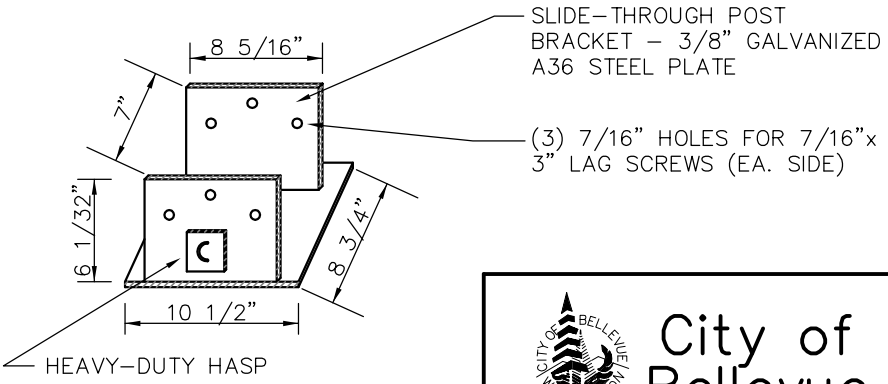

City of Bellevue

STORM AND SURFACE WATER UTILITY

TITLE

GATE/BOLLARD PLACEMENT

JANUARY 2014

NO SCALE

NO. D-45

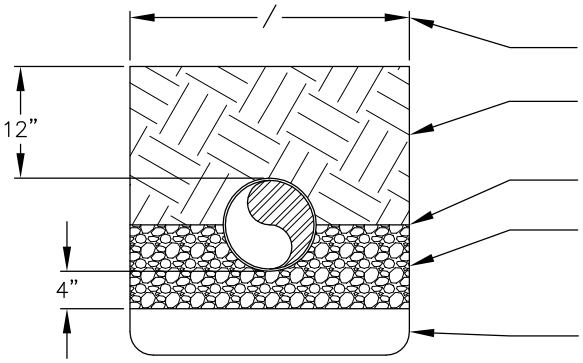

RIGID PIPE BEDDING

SEE NOTE 1.

COMPACTED BACKFILL (COMPACTED DENSITY PERCENTAGE PER STANDARD DETAIL D–25).

SPRING LINE

COMPACTED BEDDING GRAVEL PER SECTION 9–03.12(3), "GRAVEL BACKFILL FOR PIPE ZONE BEDDING", OF THE WSDOT STANDARD SPECIFICATION, OR OTHER MATERIAL IF SPECIFIED.

FOUNDATION OF GRAVEL, IF REQUIRED (SEE NOTE 2).

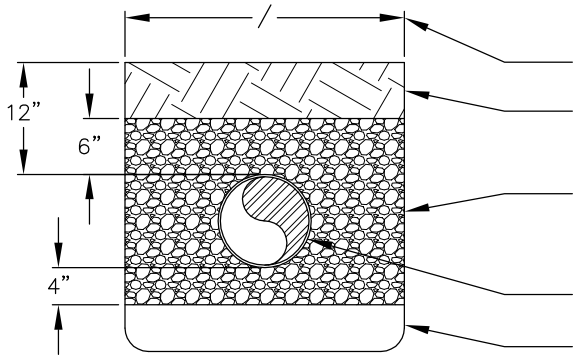

FLEXIBLE PIPE BEDDING

SEE NOTE 1.

COMPACTED BACKFILL (COMPACTED DENSITY PERCENTAGE PER STANDARD DETAIL D–25).

COMPACTED BEDDING GRAVEL PER SECTION 9–03.12(3), "GRAVEL BACKFILL FOR PIPE ZONE BEDDING", OF THE WSDOT STANDARD SPECIFICATION, OR OTHER MATERIAL IF SPECIFIED.

PVC PIPE

FOUNDATION OF GRAVEL, IF REQUIRED (SEE NOTE 2).

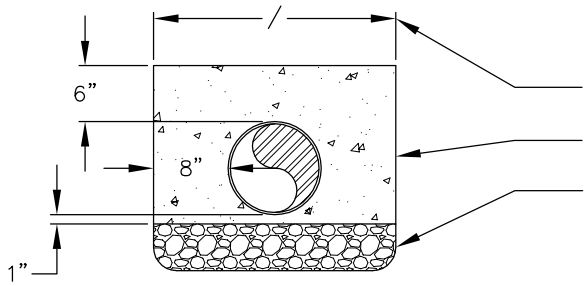

CONCRETE ENCASEMENT

SEE NOTE 1.

2000 P.S.I. CONCRETE (SEE NOTE 3)

FOUNDATION OF GRAVEL, IF REQUIRED (SEE NOTE 2).

NOTES:

1. FOR PIPES 15–INCHES AND UNDER, TRENCH WIDTH=I.D. + 30–INCHES. FOR PIPES 18–INCHES AND OVER, TRENCH WIDTH=(1.5 x I.D.)+18–INCHES. PER SECTION 2–09.4, "MEASUREMENT", OF THE WSDOT STANDARD SPECIFICATIONS.
2. EXCAVATE UNSTABLE MATERIAL DOWN TO FIRM SOIL AND REPLACE WITH FOUNDATION GRAVEL PER SECTION 9–03.9(3), "BALLAST", OF THE WSDOT STANDARD SPECIFICATIONS.
3. THE CONTRACTOR SHALL BE RESPONSIBLE FOR ANCHORING PIPE TO PREVENT FLOTATION DURING CONCRETE PLACEMENT.
4. COMPACTED CRUSHED SURFACING PER SECTION 9–03.9(3), "CRUSHED SURFACING", OF THE WSDOT STANDARD SPECIFICATIONS CAN ALSO BE USED AS BEDDING GRAVEL.

City of Bellevue

STORM AND SURFACE WATER UTILITY

TITLE

PIPE BEDDING

JANUARY 2014

NO SCALE

NO. D–46

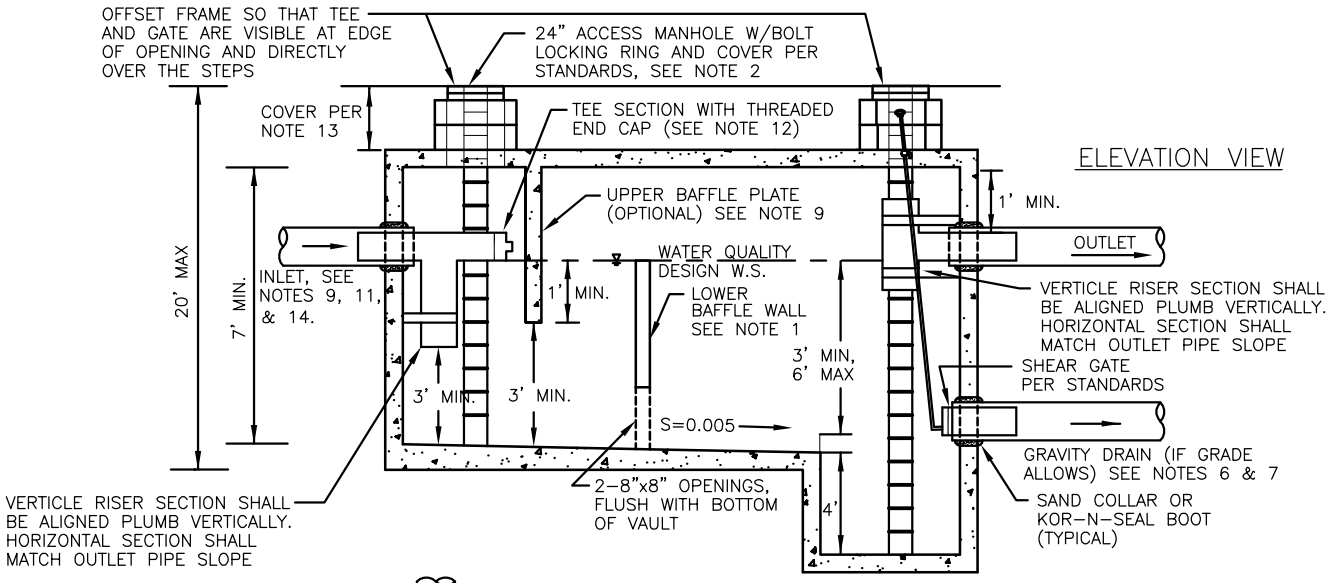

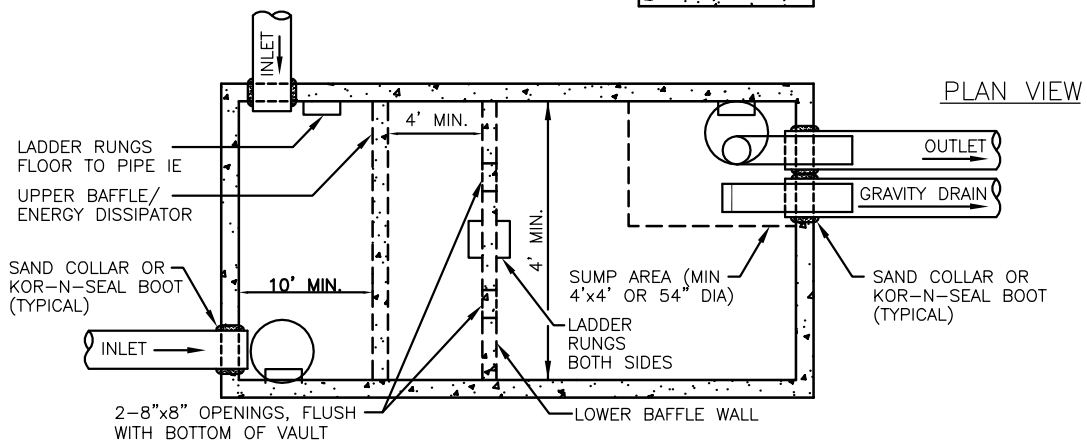

NOTES:

1. LOWER BAFFLE WALL TO DIVIDE VAULT INTO TWO CELLS WITH FIRST CELL (FOREBAY) TO OCCUPY 25% OF VAULT SURFACE AREA. ALL INLET PIPES MUST DISCHARGE TO FOREBAY.
2. MINIMUM ONE ACCESS MANHOLE PER CELL WITH AT LEAST ONE ACCESS PER 50' OF VAULT LENGTH OR WIDTH.
3. PRE-CAST VAULTS SHALL HAVE APPROVED BUBBER GASKET SYSTEM.
4. VAULT SHALL BE DESIGNED AND STAMPED BY A REGISTERED STRUCTURAL ENGINEER. VAULT SHALL BE DESIGNED FOR HS-20 TRAFFIC LOADING, MIN.
5. ALL METAL PARTS SHALL BE CORROSION RESISTANT.
6. GRAVITY DRAIN SHOULD BE SIZED TO EMPTY VAULT IN 4 HOURS.
7. PUMP STANDPIPE REQUIRED IF VAULT IS NOT EQUIPPED WITH GRAVITY DRAIN. TO ENABLE VAULT TO BE DRAINED FOR MAINTENANCE OPERATIONS, ONE STANDPIPE IS REQUIRED FOR EVERY 35,000 CF OF DEAD STORAGE. SEE SUMP WITH RISER PIPE DETAIL.
8. PROVIDE LADDER RUNGS IMMEDIATELY ADJACENT TO INLET PIPES.
9. UPPER BAFFLE PLATE MAY BE USED IN LIEU OF TEE SECTION ON INLET PIPES.
10. FLOW SPLITTER/BYPASS REQUIRED UPSTREAM OF WET VAULT TO DIVERT FLOWS THAT EXCEED THE PEAK FLOW FOR THE WATER QUALITY DESIGN STORM AROUND THE WET VAULT. BYPASS STRUCTURE MUST BE EQUIPPED WITH SHUT OFF MECHANISM TO ENABLE THE VAULT TO BE TAKEN OFF LINE FOR MAINTENANCE.
11. TEES SHALL BE ORIENTED VERTICALLY WITHIN THE VAULT, REGARDLESS OF THE SLOPE OF THE INCOMING PIPE.
12. ADAPTER FOR THREADED END CAP SHALL BE SECURED TO TEE WITH SCREWS.
13. IF PROPOSED COVER IS GREATER THAN 1', THEN IT MUST BE 2.5' MINIMUM AND ACCESS MUST BE 48" ECCENTRIC CONE, SET OVER 24" DIAMETER ACCESS OPENING.
14. INVERT ELEVATION OF INLET PIPE SHALL BE PER DESIGN ENGINEER'S CALCULATIONS.
15. ALL PIPES SHALL BE PERPENDICULAR TO FACE OF VAULT.
16. APPLY NON-SHRINK GROUT TO INSIDE AND OUTSIDE OF ALL JOINTS, RINGS, RISERS AND FRAMES.
17. PENETRATE CARRIER PIPE THROUGH VAULT WALL.
18. USE APPROVED WATERTIGHT STRUCTURE ADAPTOR.
19. SLIP SMOOTH-BORE HORIZONTAL LEG OF FLOW CONTROL TEE INSIDE CARRIER PIPE.
20. NO FLOW CONTROL JOINT OUTSIDE OF STRUCTURE.
21. PRIOR TO STARTUP, RUNOFF TREATMENT VAULT (WET VAULT) SHALL PASS 1% PER DAY LEAK TEST WHERE A MAXIMUM OF 1% WATER LOSS IS ALLOWED WITHIN A 24-HOUR PERIOD WITH VAULT FILLED TO 2-YEAR STORM ELEVATION. TEST PER THE 2009 UNIFORM PLUMBING CODE 712.2.

City of Bellevue

STORM AND SURFACE WATER UTILITY

TITLE

RUNOFF TREATMENT VAULT (WET VAULT)

JANUARY 2014

NO SCALE

NO. D-47

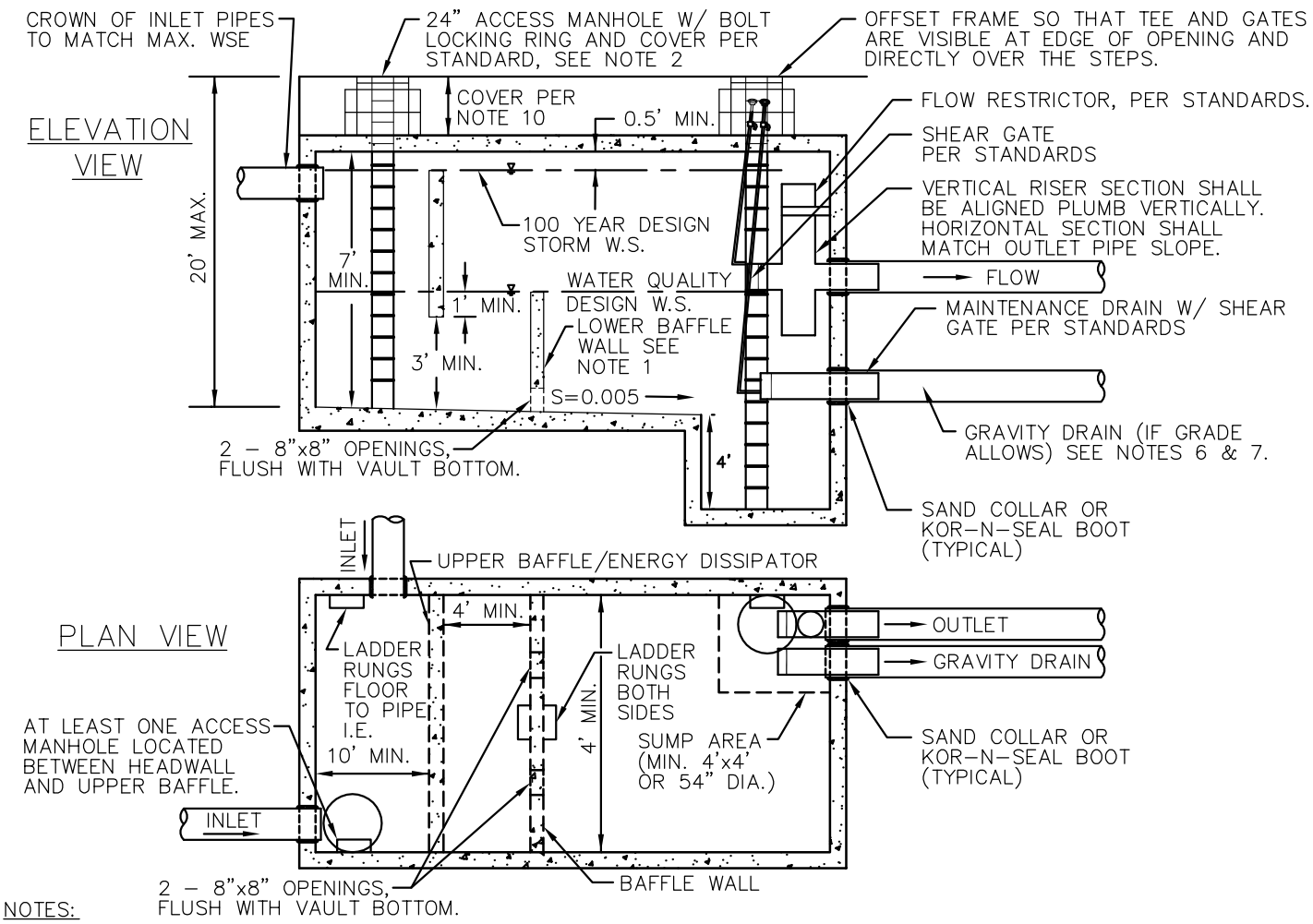

NOTES:

1. LOWER BAFFLE WALL TO DIVIDE VAULT INTO TWO APPROXIMATELY EQUAL SIZE CELLS. UPPER BAFFLE SET AT 25% OF VAULT SURFACE AREA (10' MINIMUM FROM HEADWALL.)
2. MINIMUM ONE ACCESS MANHOLE PER CELL WITH AT LEAST ONE ACCESS PER 50' VAULT LENGTH OR WIDTH.
3. PROVIDE WATER STOP AT ALL CAST-IN-PLACE CONSTRUCTION JOINTS. PRE-CAST VAULTS SHALL HAVE APPROVED RUBBER GASKET SYSTEM.
4. VAULT SHALL BE DESIGNED AND STAMPED BY A REGISTERED STRUCTURAL ENGINEER. VAULT SHALL BE DEISGNED FOR HS-20 TRAFFIC LOADINGS, MINIMUM.
5. ALL METAL PARTS SHALL BE CORROSION RESISTANT.
6. GRAVITY DRAIN SHOULD BE SIZED TO EMPTY VAULT IN 4 HOURS.
7. PUMP STANDPIPE REQUIRED IF VAULT IS NOT EQUIPPED WITH GRAVITY DRAIN. TO ENABLE VAULT TO BE DRAINED FOR MAINTENANCE OPERATIONS, ONE STANDPIPE IS REQUIRED FOR EVERY 35,000 CF OF DEAD STORAGE. SEE SUMP WITH RISER PIPE DETAIL.
8. PROVIDE LADDER RUNGS IMMEDIATELY ADJACENT TO ALL INLET/OUTLET PIPES.
9. ALL INLETS MUST DISCHARGE UPSTREAM OF UPPER BAFFLE.
10. IF PROPOSED COVER IS GREATER THAN 1', THEN IT MUST BE 2.5' MINIMUM AND ACCESS MUST BE 48" ECCENTRIC CONE, SET OVER 24" DIAMETER ACCESS OPENING.
11. ALL PIPES SHALL BE PERPENDICULAR TO FACE OF VAULT.
12. APPLY NON-SHRINK GROUT TO INSIDE AND OUTSIDE OF ALL JOINTS, RINGS, RISER AND FRAMES.
13. PENETRATE CARRIER PIPE THROUGH VAUL WALL.
14. USE APPROVED WATERTIGHT STRUCTURE ADAPTOR.
15. SLIP SMOOTH-BORE HORIZONTAL LEG OF FLOW CONTROL TEE INSIDE CARRIER PIPE.
16. NO FLOW CONTROL JOINT OUTSIDE OF STRUCTURE.
17. PRIOR TO STARTUP, COMBINED VAULT (DETENTION AND RUNOFF TREATMENT) SHALL PASS 1% PER DAY LEAK TEST WHERE A MAXIMUM OF 1% WATER LOSS IS ALLOWED WITHIN A 24-HOUR PERIOD WITH VAULT FILLED TO 2-YEAR STORM ELEVATION TEST PER THE 2009 UNIFORM PLUMBING CODE 712.2.

JANUARY 2014 NO SCALE

City of Bellevue

STORM AND SURFACE WATER UTILITY

TITLE

COMBINED VAULT (DETENTION AND RUNOFF TREATMENT)

NO. D-48

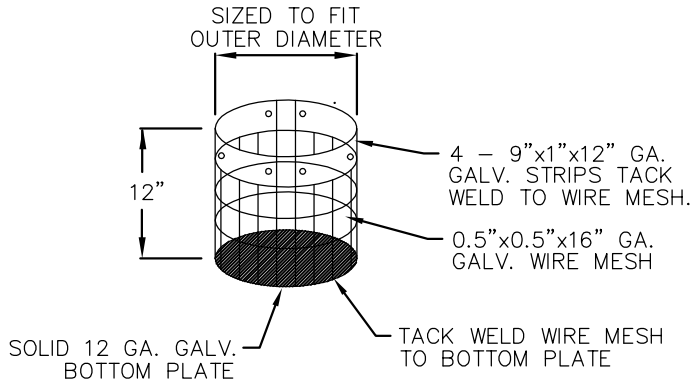

SCREEN

NOTE:
ATTACH SCREEN TO CMP CROSS W/ 6 1" GALVANIZED METAL SCREWS–2 PER STRAP, OR USE STAINLESS STEEL PIPE CLAMP

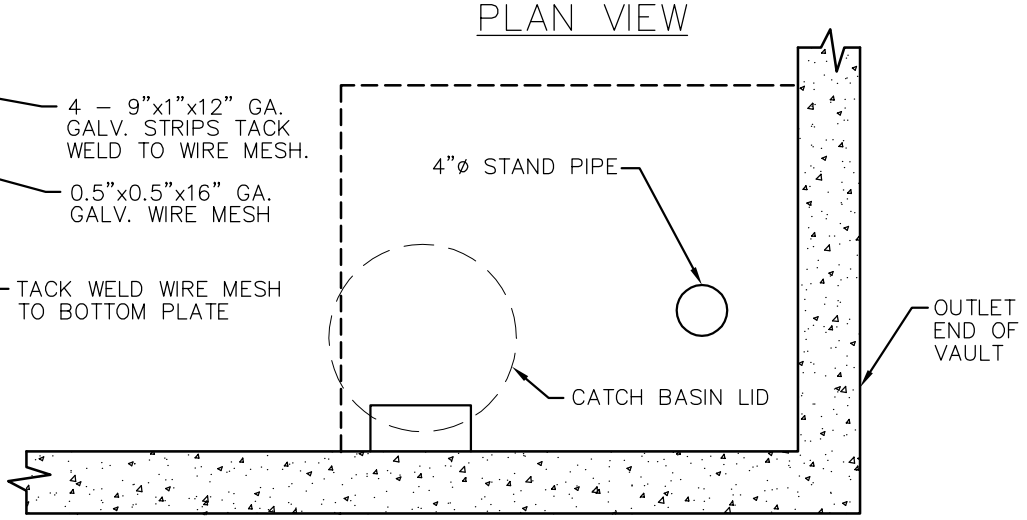

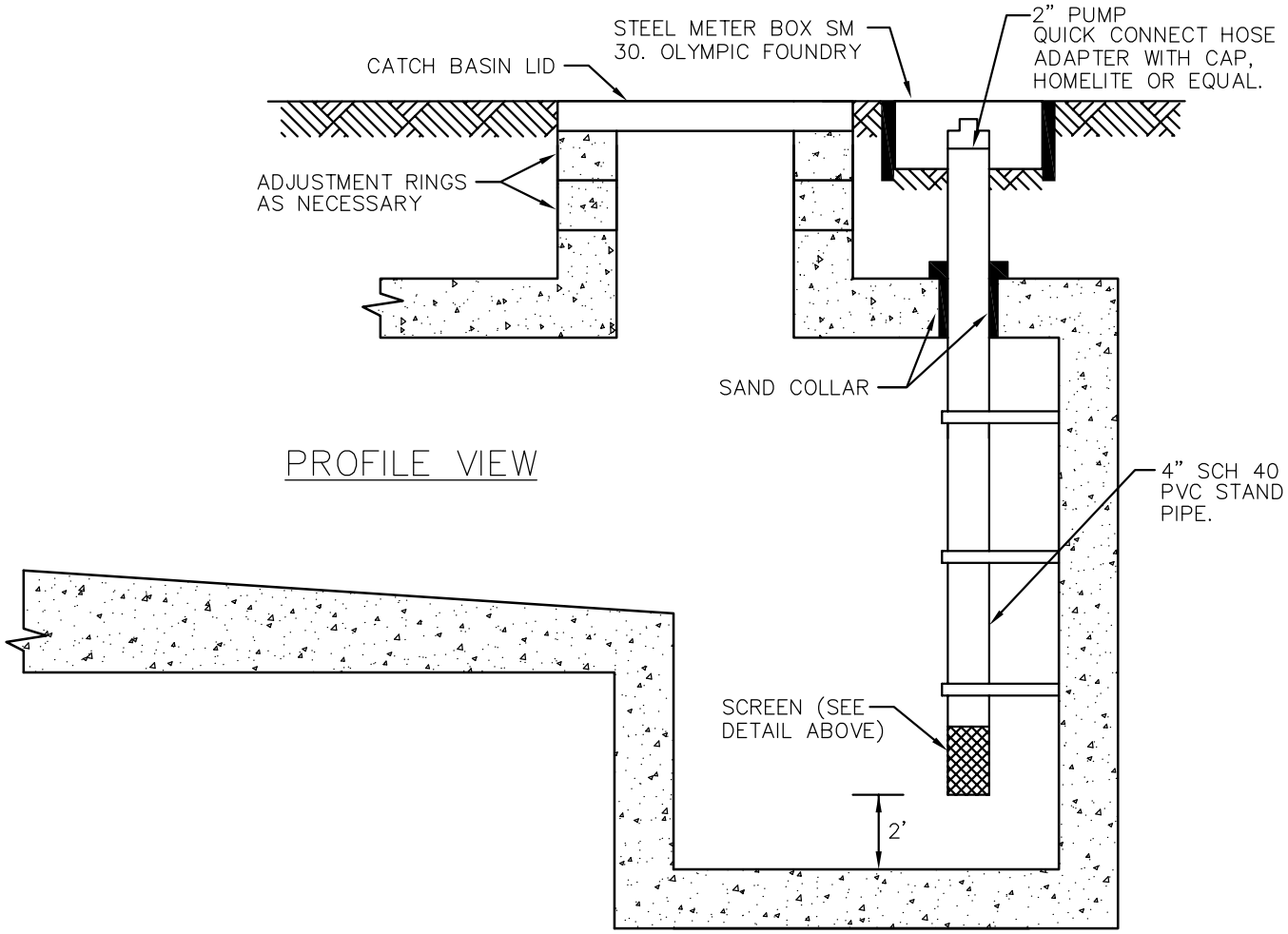

NOTE:
TO BE USED ONLY WHEN ALLOWED BY THE CITY

City of Bellevue

STORM AND SURFACE WATER UTILITY

TITLE

SUMP WITH RISER PIPE

JANUARY 2014

NO SCALE

NO. D–49

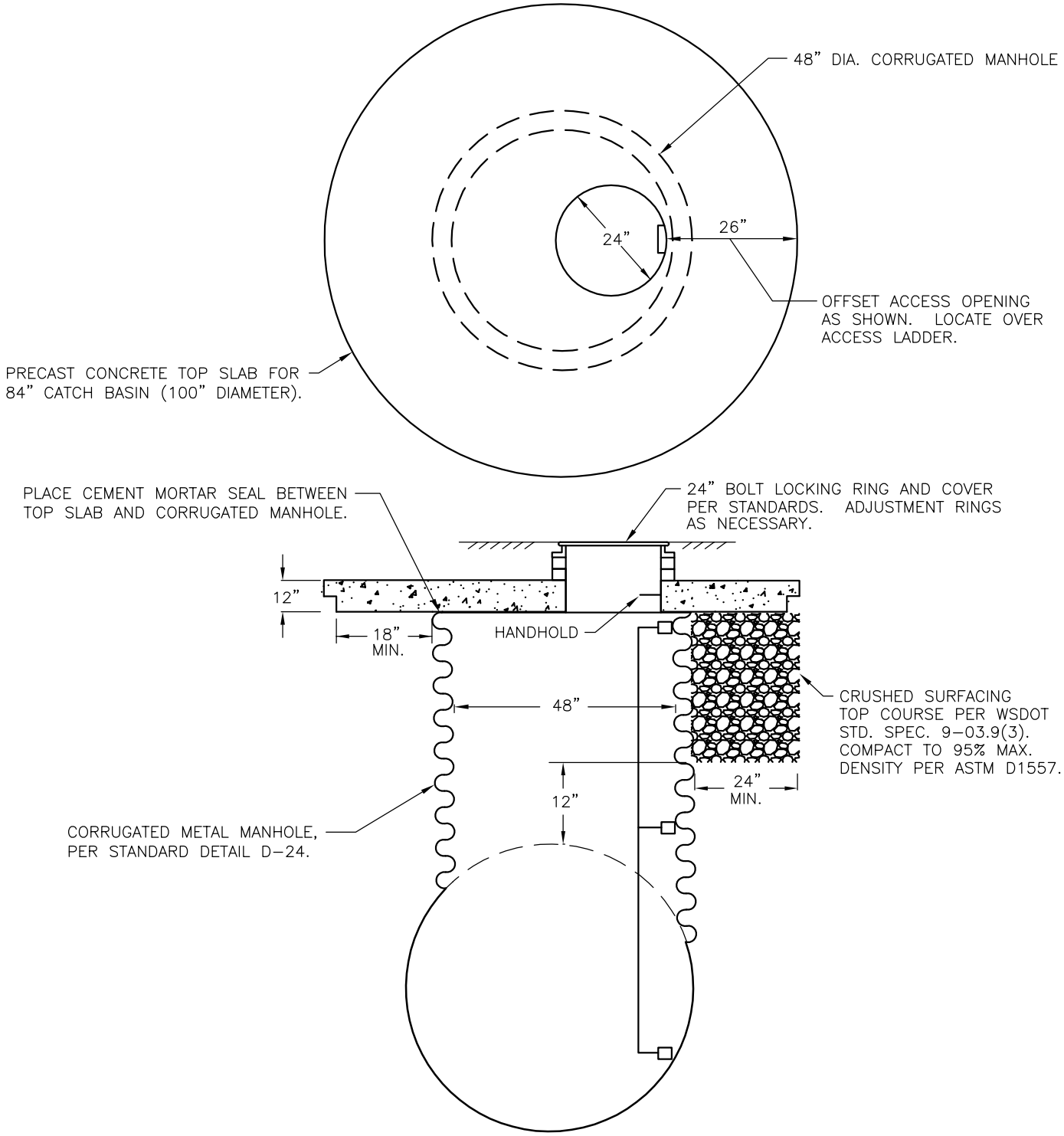

ECCENTRIC SECTION

NOTES:

1. TOP SLAB SHALL BE RATED FOR HS-20 LOADING.
2. APPLY NON-SHRINK GROUT TO INSIDE AND OUTSIDE OF ALL JOINTS, RINGS, RISERS AND FRAMES.
3. LADDER SHALL BE WELDED TO INSIDE OF MANHOLE. FIELD APPLY ASPHALT COATING TO WELDS.

JANUARY 2014 NO SCALE

City of Bellevue

STORM AND SURFACE WATER UTILITY

TITLE

TRAFFIC BEARING ACCESS FOR CORRUGATED METAL MANHOLE

NO. D-51

OUTSIDE OF R.O.W OR EASEMENT

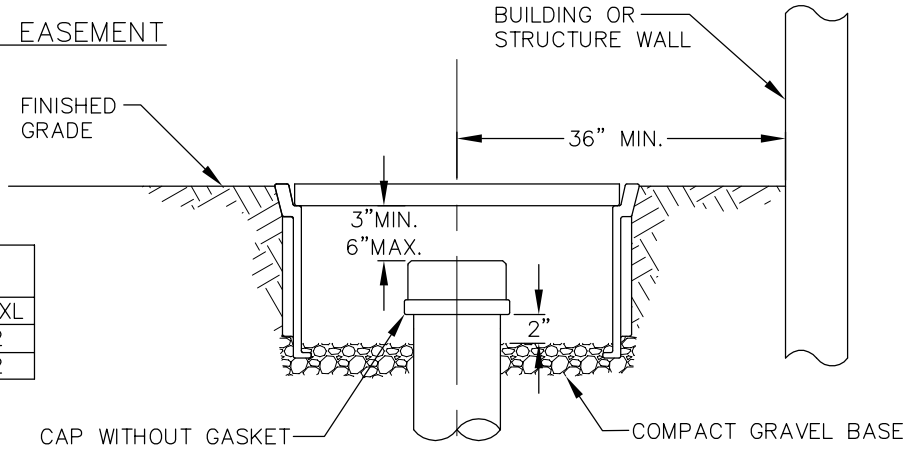

C.O. PIPE DIAMETER	MID-STATES PLASTIC BOX
4"	MSBCF-1118-18XL
6"	MSBCF-1324-12
8"	MSBCF-1730-12

RIGHT-OF-WAY OR EASEMENT

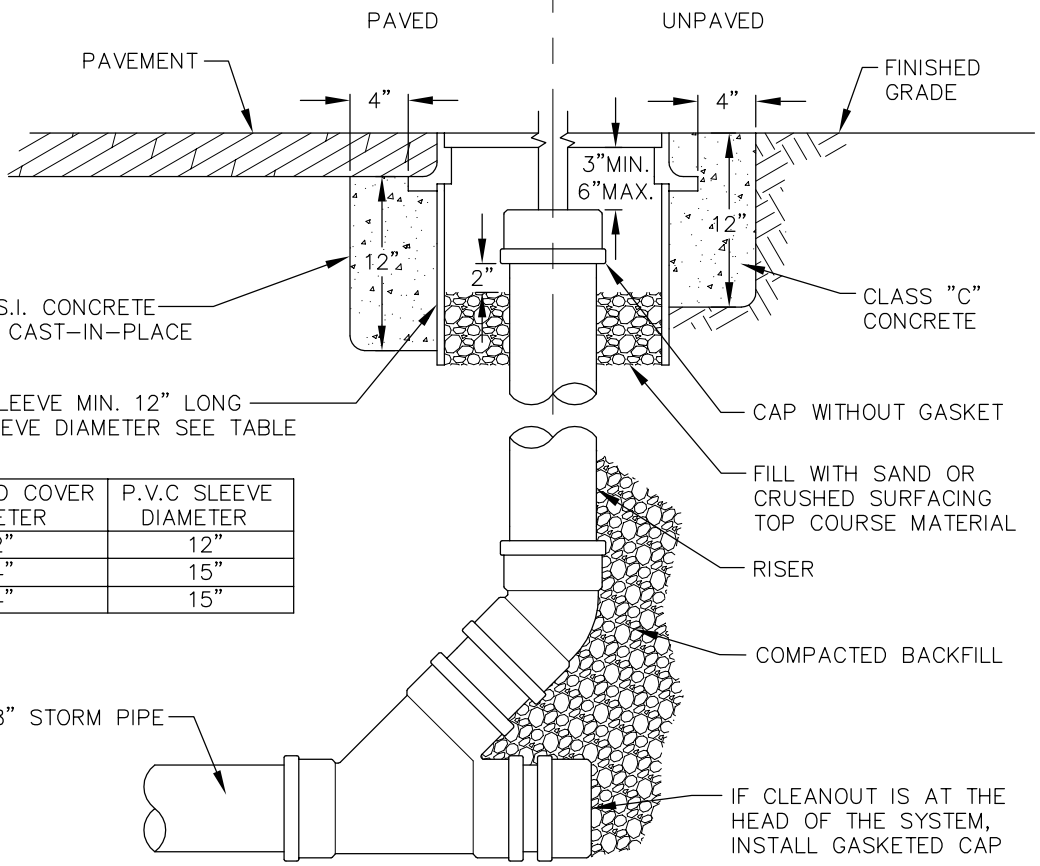

C.O. PIPE DIAMETER	RING AND COVER DIAMETER	P.V.C SLEEVE DIAMETER
4"	12"	12"
6"	14"	15"
8"	14"	15"

NOTES:

1. BOLT-LOCKING CAST IRON RING AND COVER SHALL BE USED IN RIGHT-OF-WAY AND EASEMENTS AND MUST BE RATED HS-20 IF USED IN PAVED AREAS. SEE TABLE FOR SIZES.
2. MID-STATES PLASTIC BOX OR EQUAL MAY BE USED IF C.O. IS OUTSIDE OF RIGHT-OF-WAY OR EASEMENT. SEE TABLE FOR SIZES. THE COVER FOR THE PLASTIC BOX SHALL BE DUCTILE IRON AND READ "DRAIN" OR BE BLANK (NO LABEL).
3. CAST IRON COVER SHALL READ "DRAIN."
4. LOCKING BOLTS SHALL BE 5/8"-11 N.C. 304 STAINLESS STEEL SOCKET (ALLEN) HEAD, 2" LONG.
5. 14" BOLT-LOCKING CAST IRON COVER SHALL BE EQUAL TO INLAND FOUNDRY NUMBER 209, OR 210.
6. SPECIAL "DECORATIVE" CASTING MAY BE USED IF PREAPPROVED BY CITY.

City of Bellevue

STORM AND SURFACE WATER UTILITY

TITLE

CLEANOUT TO GRADE

JANUARY 2014

NO SCALE

NO. D-52

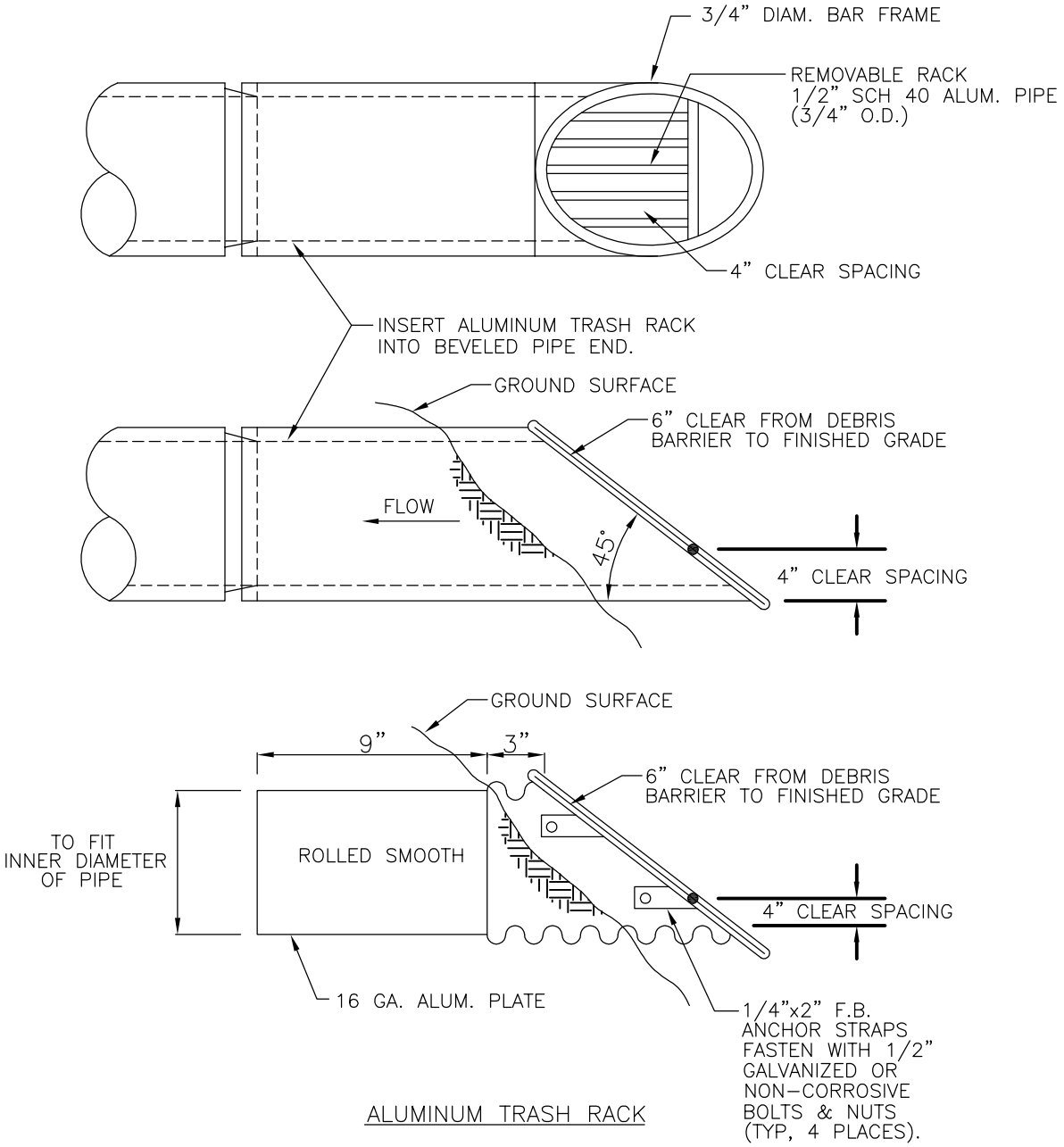

ALUMINUM TRASH RACK

NOTES:

1. ALL STEEL PARTS MUST BE GALVANIZED AND ASPHALT COATED (TREATMENT 1 OR BETTER).
2. CONTRACTOR TO VERIFY DIMENSIONS.
3. TO BE USED IN DETENTION PONDS AND AND PIPES GREATER THAN 18" DIAMETER.

City of Bellevue

STORM AND SURFACE WATER UTILITY

TITLE

TRASH RACK/DEBRIS BARRIER

JANUARY 2014

NO SCALE

NO. D-53

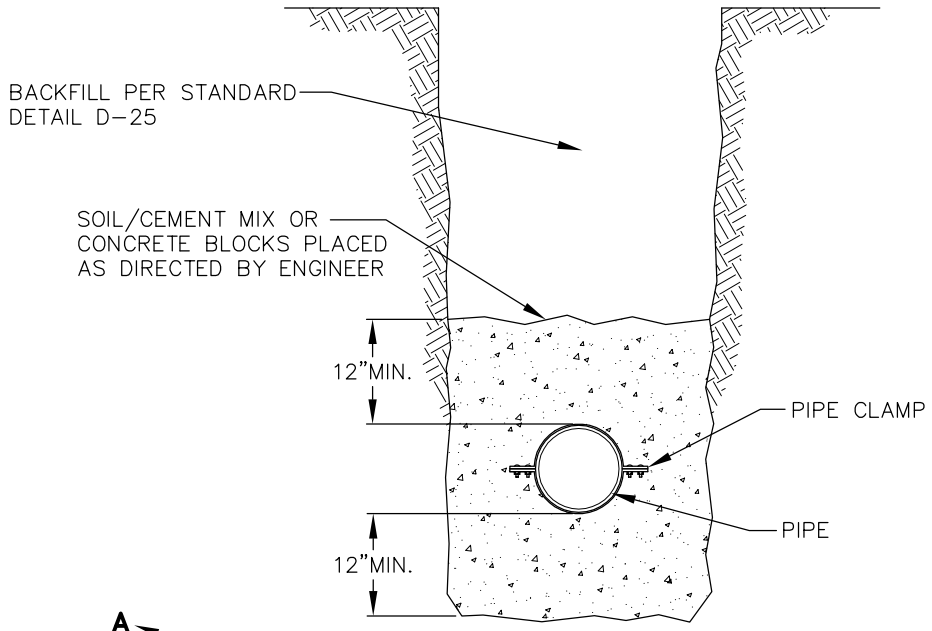

SECTION A–A

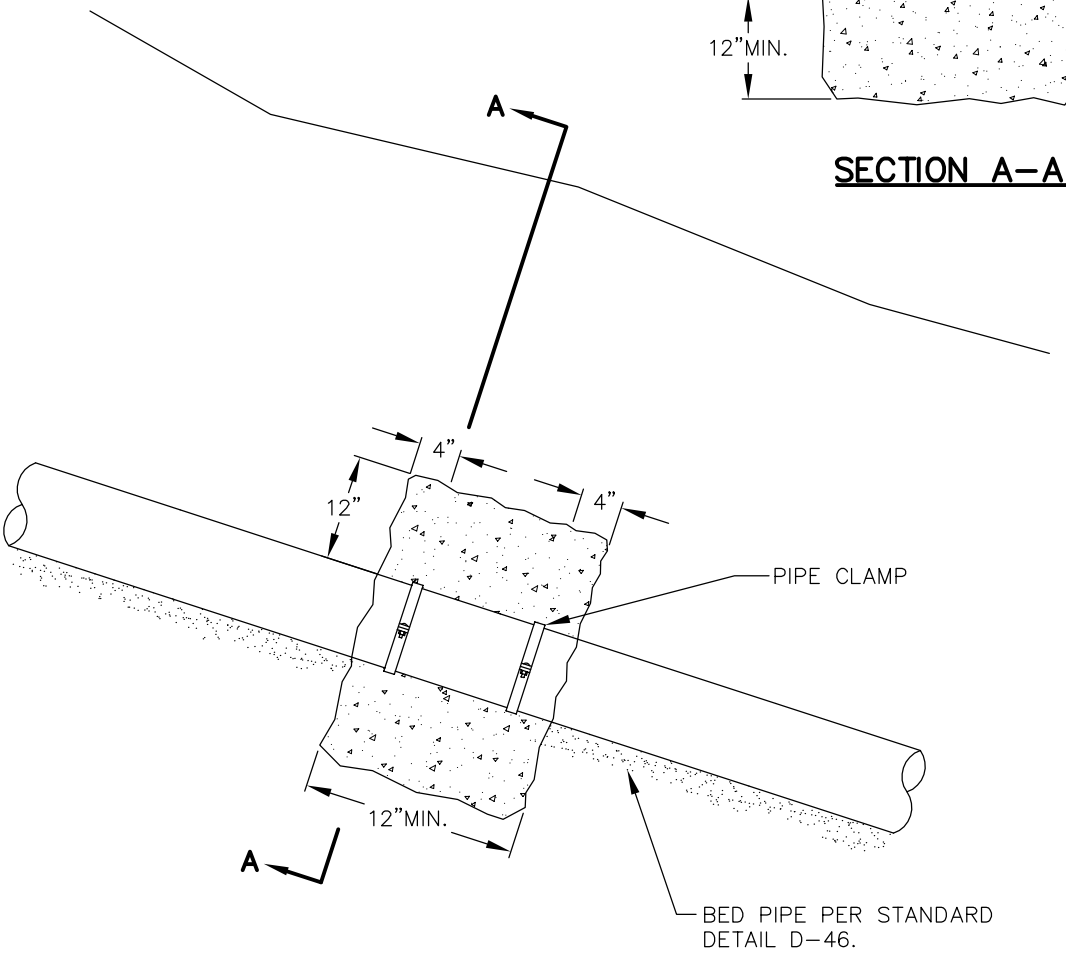

NOTES:

1. SOIL CEMENT MIX OR CONCRETE BLOCKS REQUIRED ON PIPE SLOPES OF 20% OR GREATER.
2. SOIL CEMENT BLOCKS PLACED OVER AND AROUND. TAMPED INTO PLACE BEFORE BACKFILLING. USE 10% CEMENT WITH 90% NATIVE SOIL MIX. ADD ENOUGH WATER TO FORM A DRY MIX THAT WILL HOLD ITS SHAPE WHEN MOLDED INTO A BALL.
3. PLACE TWO PIPE CLAMPS, 4" FROM BLOCK ENDS TO PROVIDE ANCHORAGE TO SOIL/CEMENT MIX.

City of Bellevue

STORM AND SURFACE WATER UTILITY

TITLE

SOIL/CEMENT PIPE ANCHORS

JANUARY 2014

NO SCALE

NO. D–54

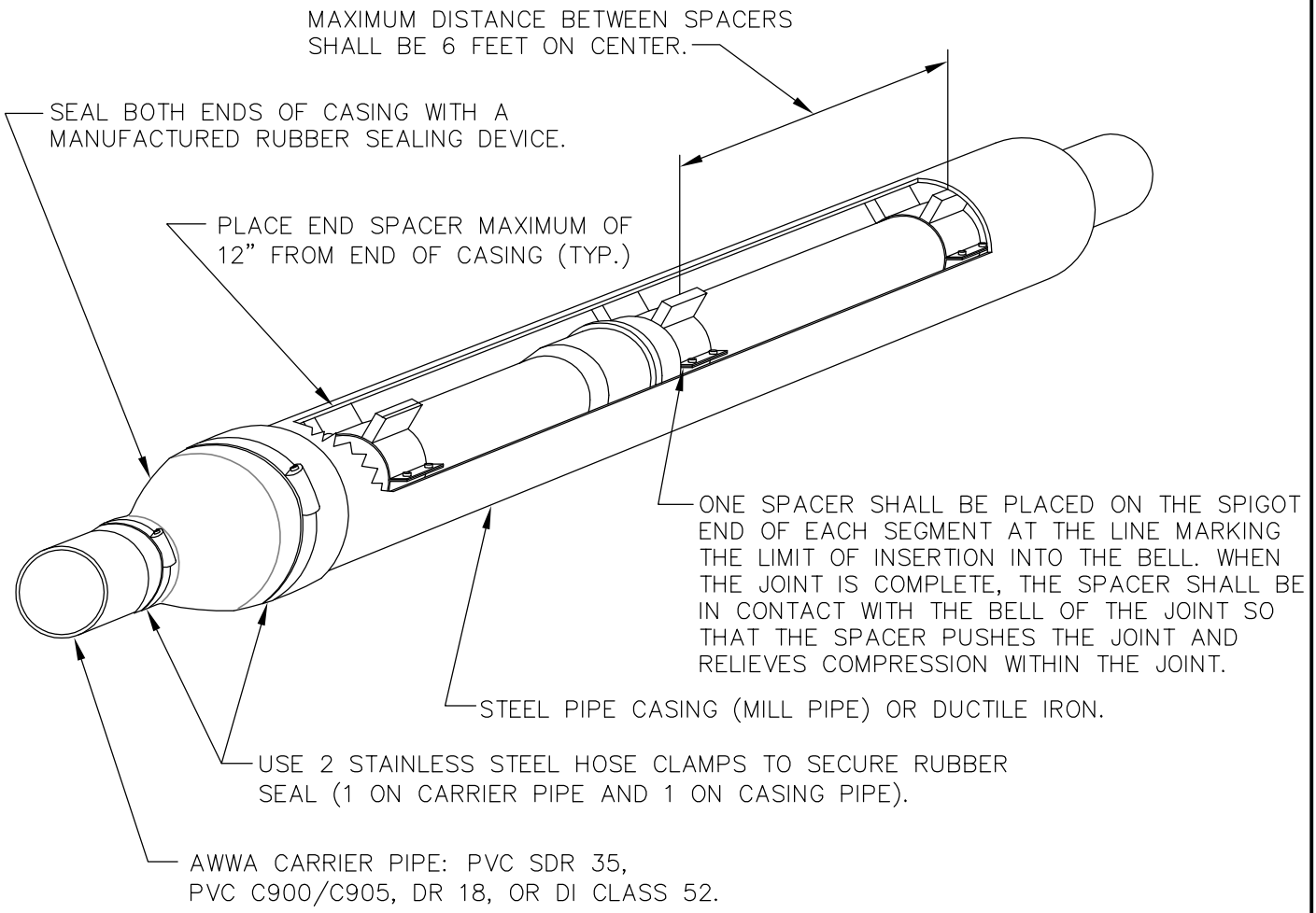

CARRIER PIPE DIAMETER	4"	6"	8"	10"	12"
CASING DIAMETER	10"	12"	14"	16"	20"
STEEL CASING THICKNESS	0.25"	0.25"	0.25"	0.25"	0.25"
SPACER BAND WIDTH	8"	8"	8"	8"	8"

NOTES:

1. CASING SPACERS SHALL BE "CENTER POSITIONING" TYPE.
2. FOR CASING SPACERS SPECS SEE S4-24.
3. MINIMUM RUNNER WIDTH SHALL BE 2 INCHES.
4. RUNNER HEIGHT SHALL BE SIZED TO PROVIDE:
   A. MINIMUM 0.75" BETWEEN CARRIER PIPE BELL AND CASING PIPE WALL AT ALL TIMES.
   B. MINIMUM 1" CLEARANCE BETWEEN RUNNERS AND TOP OF CASING WALL TO PREVENT JAMMING DURING INSTALLATION.
5. STEEL CASING DIAMETERS ARE "OUTSIDE DIAMETER" FOR 16" AND LARGER.
6. SPACER BAND WIDTH SHALL BE 12" FOR CARRIER PIPES THAT ARE 36" DIAMETER OR GREATER.
7. FOR STEEL CASING, PROVIDE SHOP-APPLIED ANTI-CORROSIVE COATING ON CASING EXTERIOR CONFORMING TO AWWA C210. MINIMUM COATING THICKNESS 16 MILS DFT (DO NOT EXCEED MANUFACTURER'S MAXIMUM THICKNESS). PRODUCT SHALL BE EQUAL TO TNEMEC HI-BUILD TNEMETAR SERIES 46H-413.

City of Bellevue

STORM AND SURFACE WATER UTILITY

TITLE

CASING INSTALLATION

JANUARY 2014 NO SCALE

NO. D-56

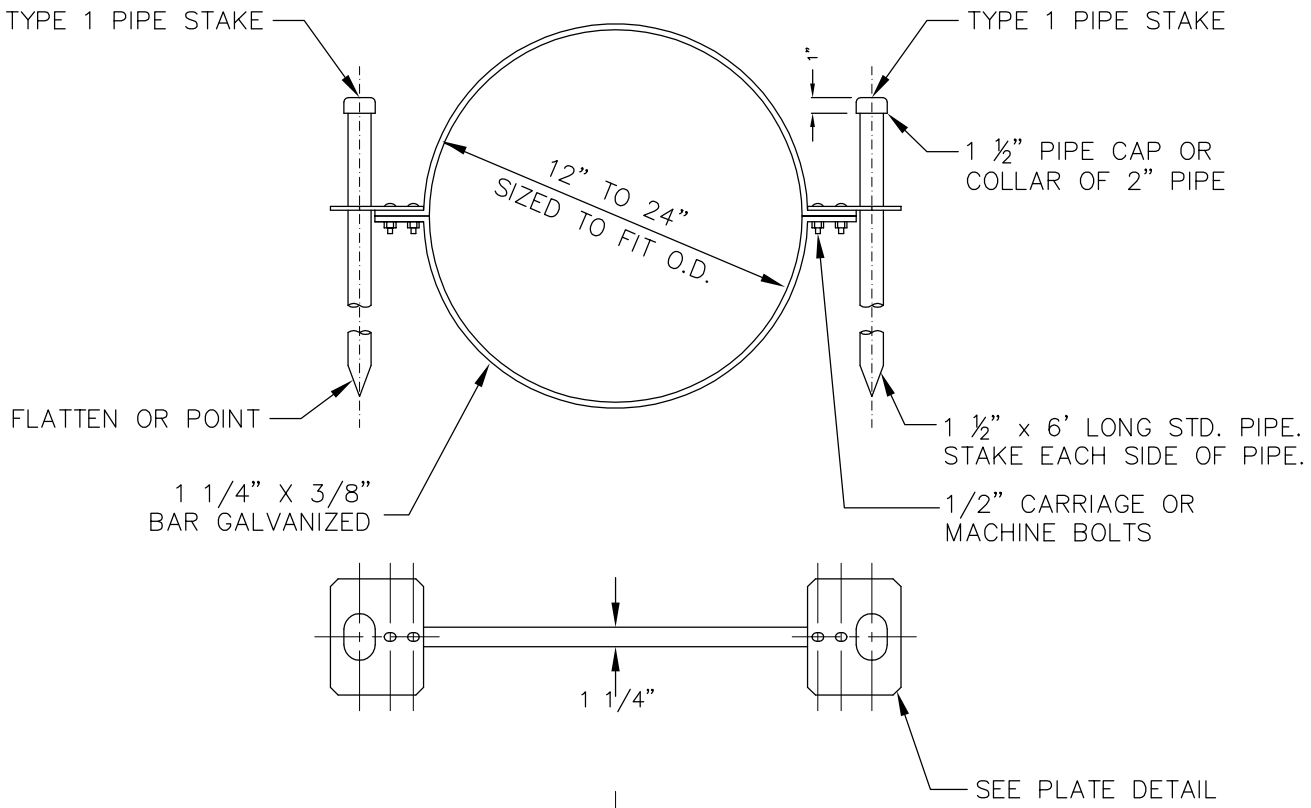

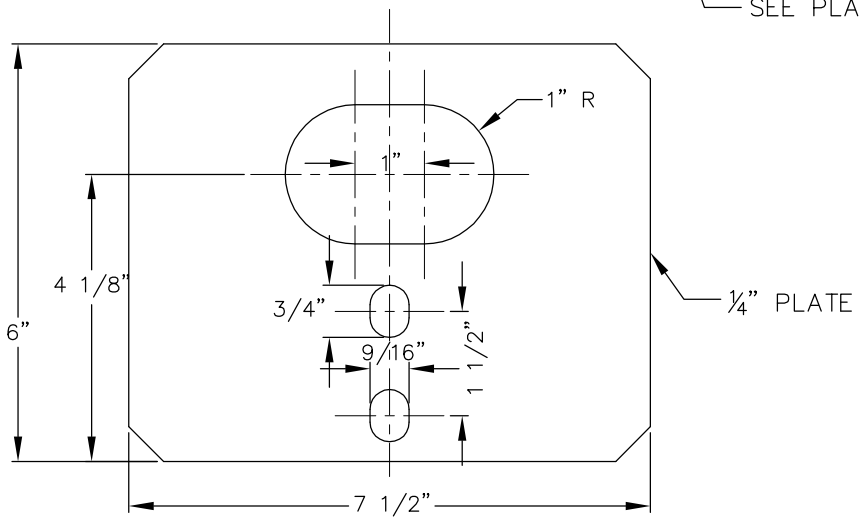

PLATE DETAIL

NOTES:

1. ALL PIPE STAKES, HARDWARE AND MATERIALS SHALL BE HOT DIPPED GALVANIZED AFTER FABRICATION.

City of Bellevue

STORM AND SURFACE WATER UTILITY

TITLE

PIPE STAKE ANCHOR ASSEMBLY

JANUARY 2014

NO SCALE

NO. D-57

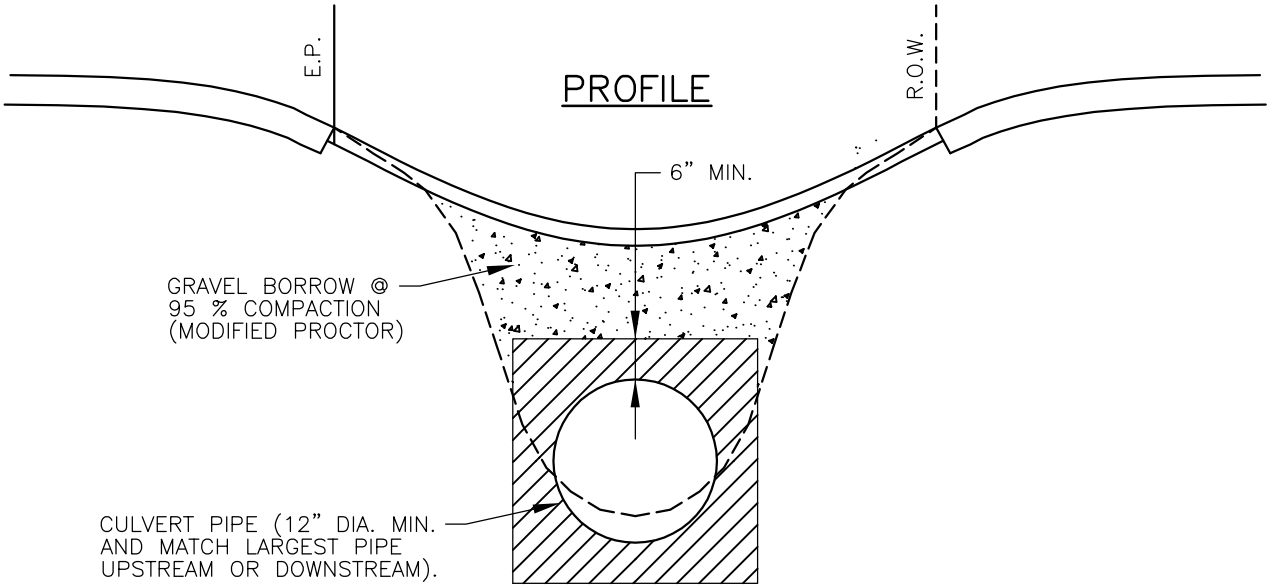

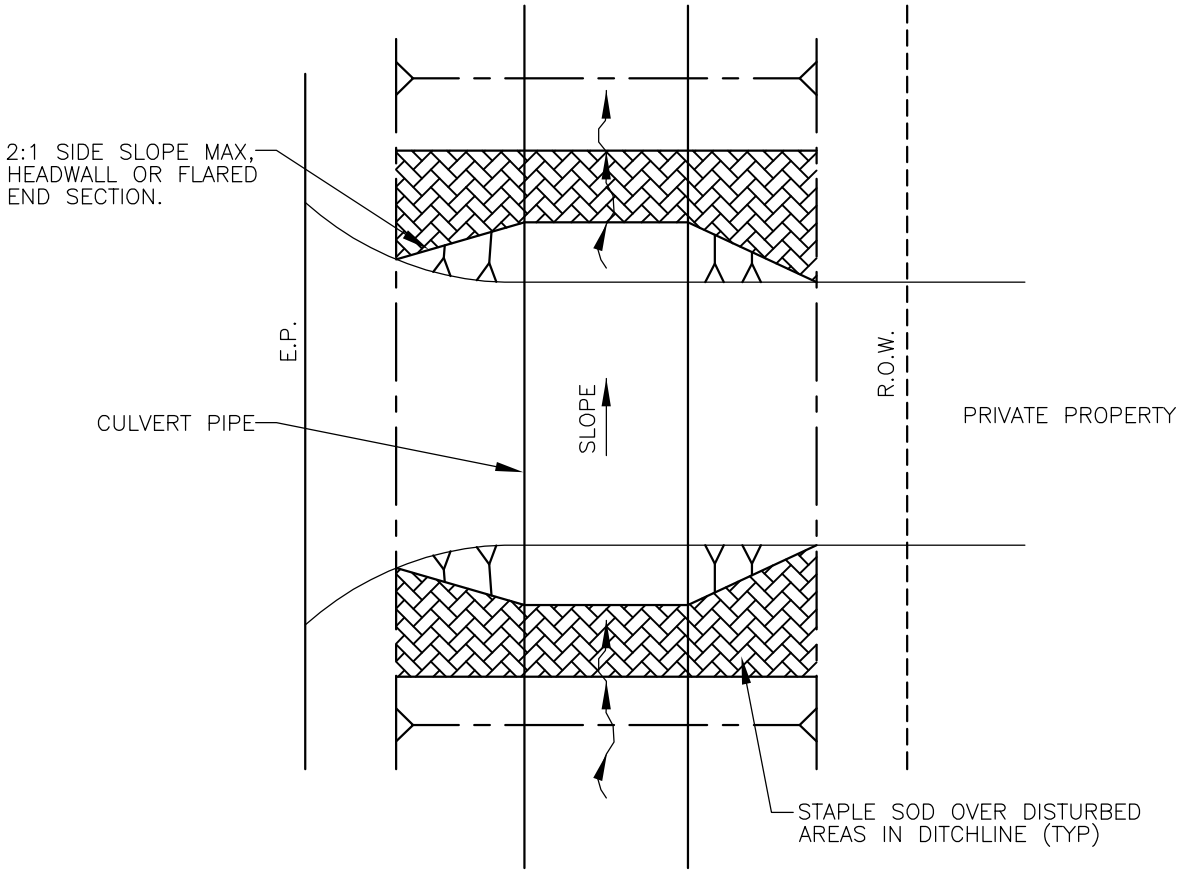

PLAN

NOTES:

1. MINIMUM BACKFILL COVER OVER PIPE IS 2FT. IF LESS THAN 2FT. COVER, PIPE SHALL BE CLASS 52 DUCTILE IRON.
2. DRIVEWAY CULVERT SHALL BE DESIGNED TO MATCH UPSTREAM AND DOWNSTREAM STORM SYSTEM, MINIMUM 12'.
3. PIPE MATERIAL SHALL BE PER THE UTILITIES ENGINEERING STANDARDS.

City of Bellevue

STORM AND SURFACE WATER UTILITY

TITLE

DRIVEWAY CULVERT

JANUARY 2014

NO SCALE

NO. D-58

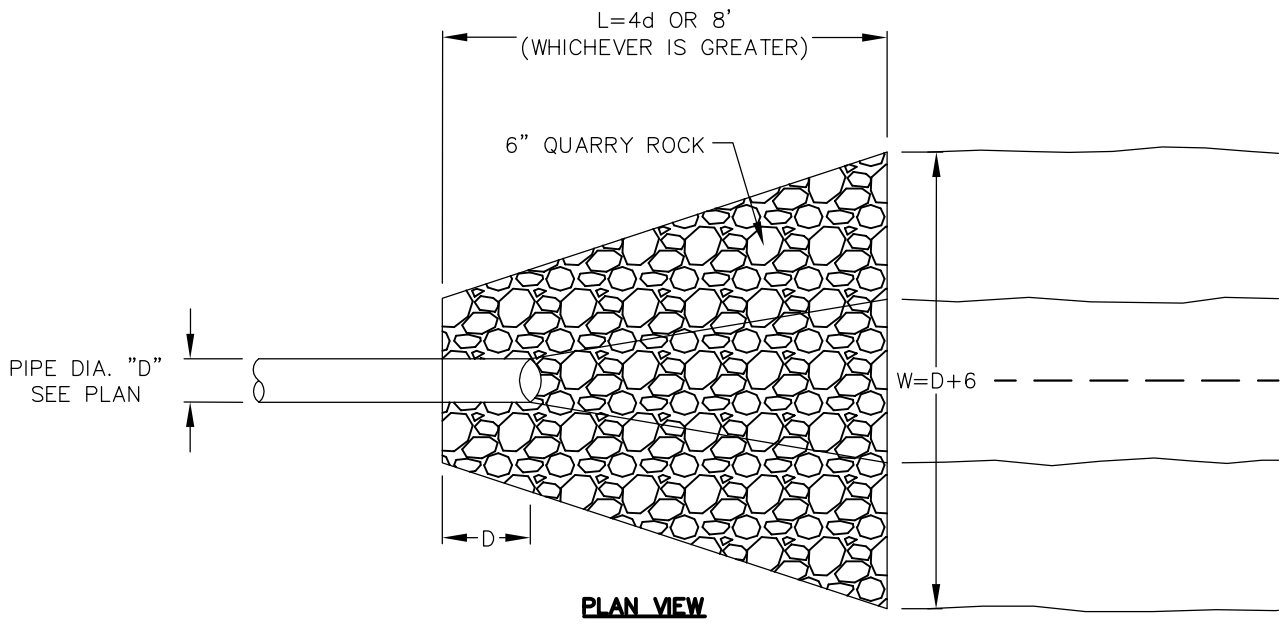

PLAN VIEW

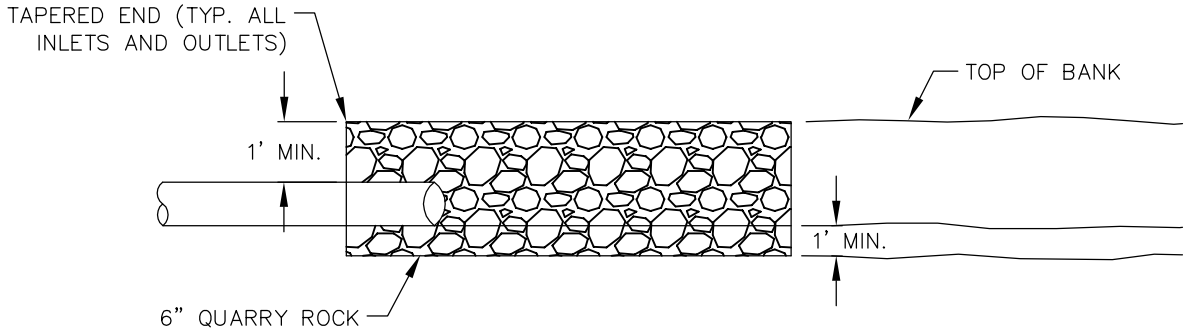

ELEVATION VIEW

NOTES:

1. DISCHARGE VELOCITY IS 2.6 FT/SEC (100 YR STORM EVENT) THEREFORE A RIP RAP PAD IS REQUIRED.
2. RIP RAP SHALL BE IN ACCORDANCE W/ SECTION 9-13.1 OF THE STANDARD SPECIFICATIONS. RIP RAP SHALL BE REASONABLY WELL GRADED W/ THE FOLLOWING GRADATION:

MAX STONE SIZE	PERCENT PASSING
8"	100%
6"	40% – 60%
2"	0% – 10%

City of Bellevue

STORM AND SURFACE WATER UTILITY

TITLE

ROCK PROTECTION OUTFALL

JANUARY 2014

NO SCALE

NO. D-59

ELEVATION

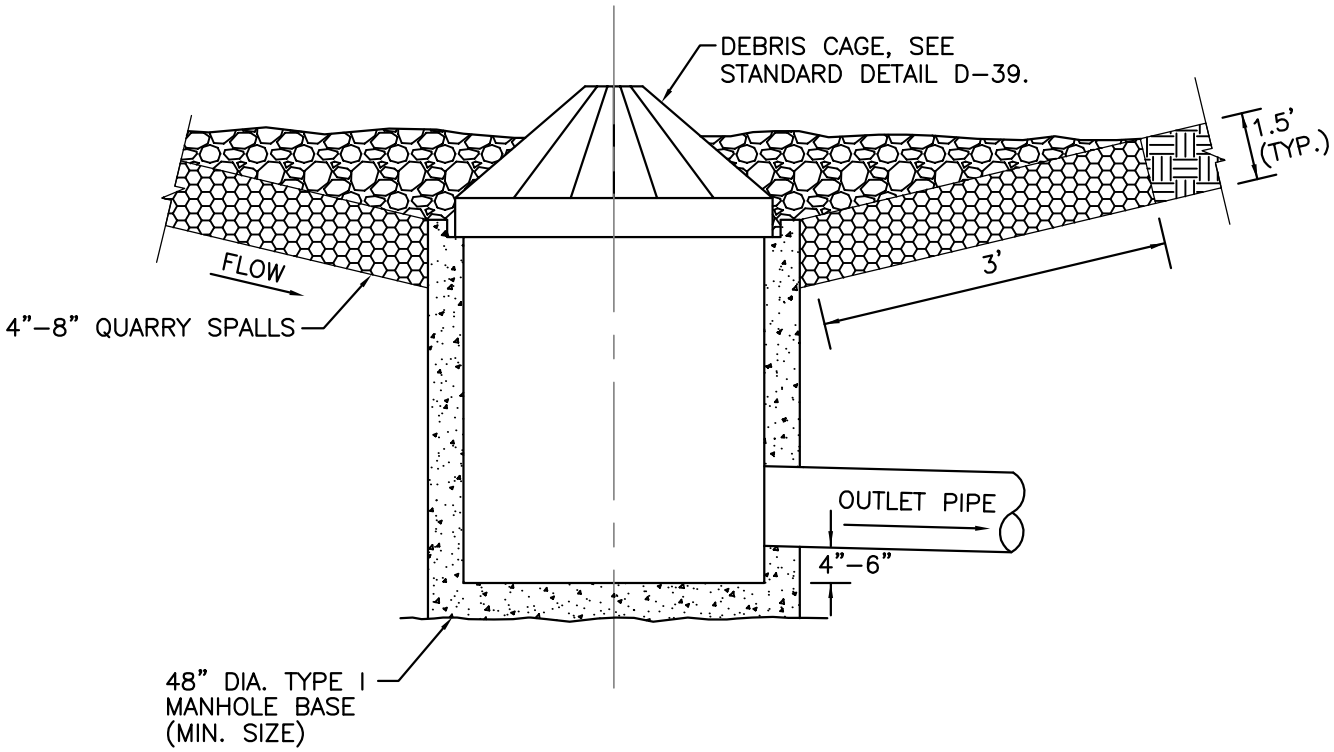

PLAN

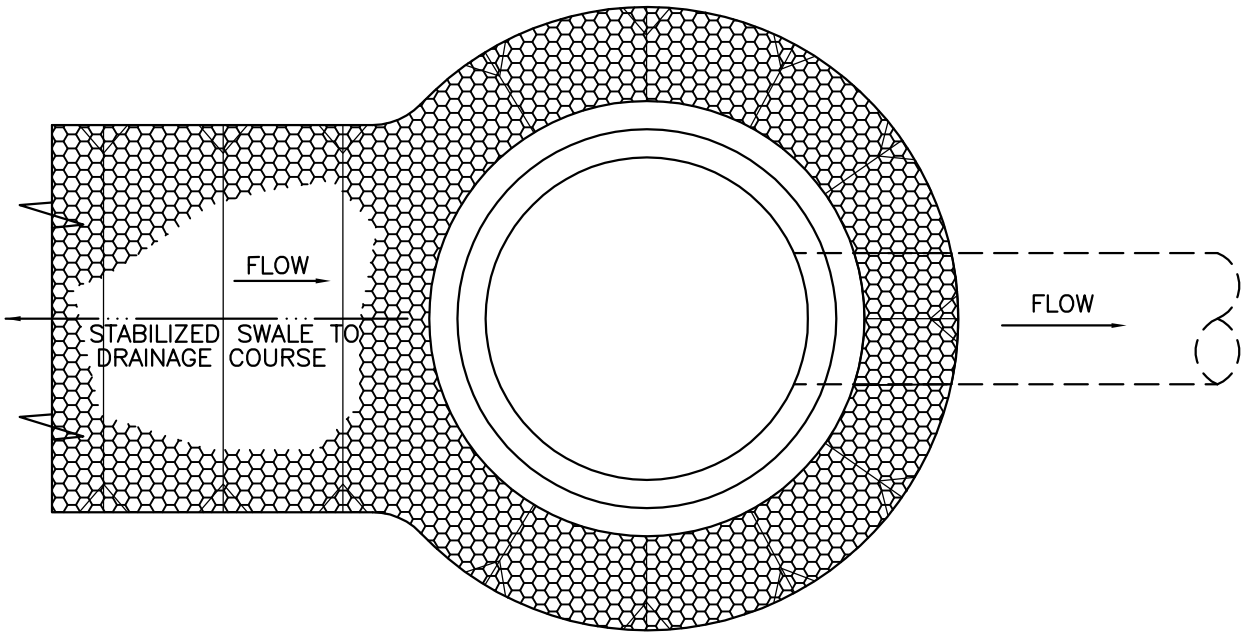

City of Bellevue

STORM AND SURFACE WATER UTILITY

TITLE

BIRD CAGE TRASH RACK STRUCTURE

NO. D-60

JANUARY 2014

NO SCALE

AMENDMENT FOR LANDSCAPED AREAS

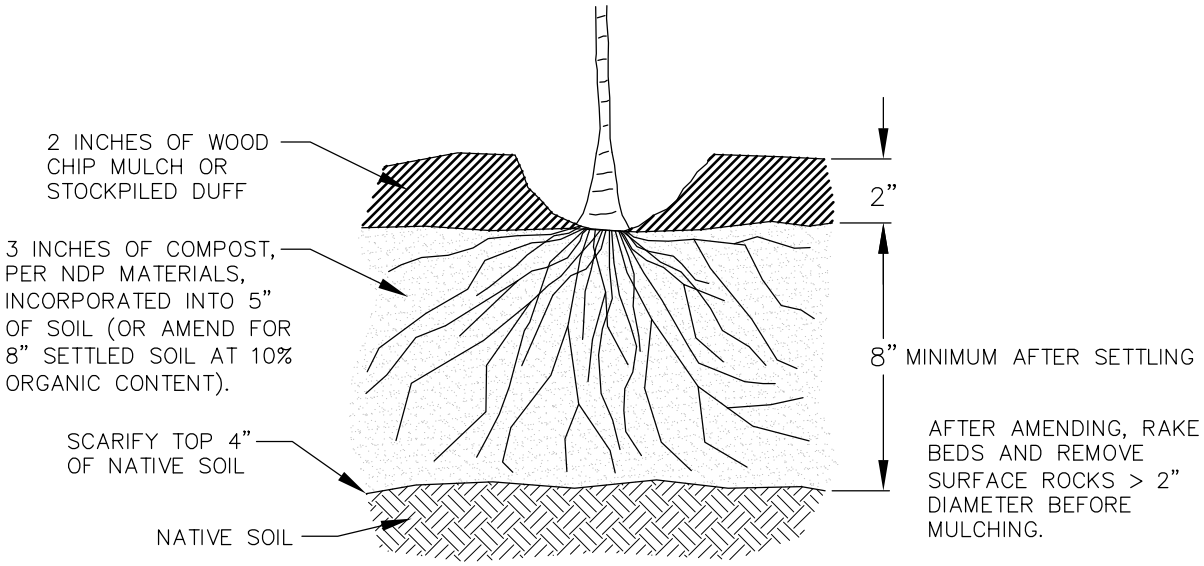

SOIL AMENDMENT FOR GRASS OR TURF AREAS

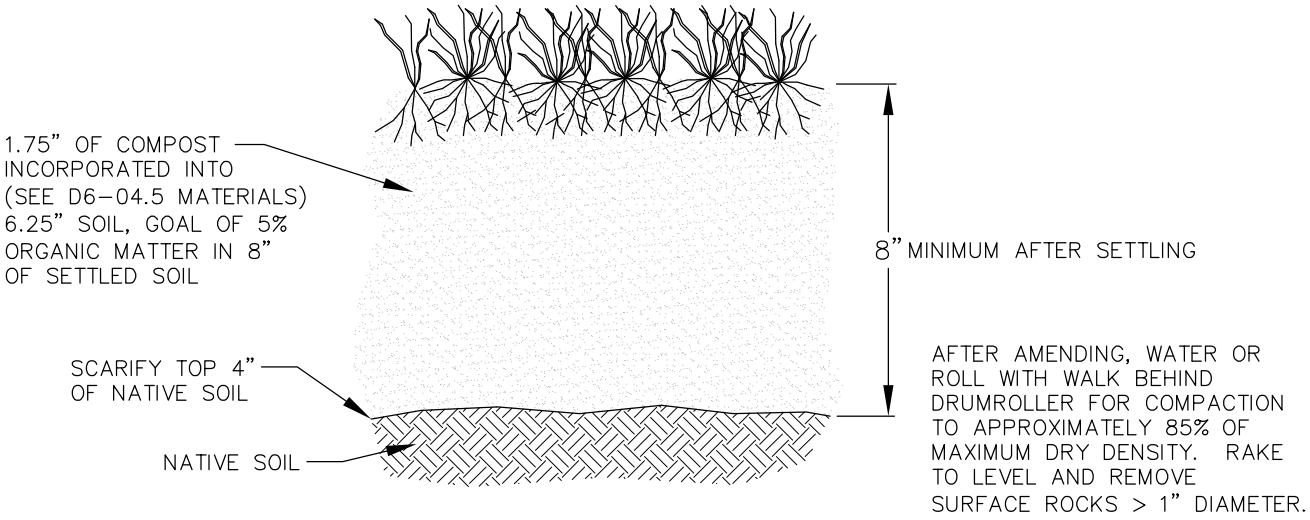

NOTES:

1. AMEND SOILS PER ECOLOGY MANUAL, VOL. V, 5.3.1, BMP T5.13, (2005 OR CURRENT) OR WWW.SOILSFORSALMON.ORG.
2. DO NOT AMEND SOILS IN AREAS WITH UNDISTURBED SOIL AND NATIVE VEGETATION.
3. OPTIONAL ALTERNATIVE: STOCKPILE NATIVE TOPSOIL ONSITE, AMEND IF NEEDED, AND REPLACE BEFORE PLANTING.
4. OPTIONAL ALTERNATIVE: IMPORT TOPSOIL MIX OF SUFFICIENT ORGANIC CONTENT AND DEPTH TO MEET REQUIREMENTS.

City of Bellevue

STORM AND SURFACE WATER UTILITY

TITLE

AMENDED SOILS

NO. NDP-1

JANUARY 2014

NO SCALE

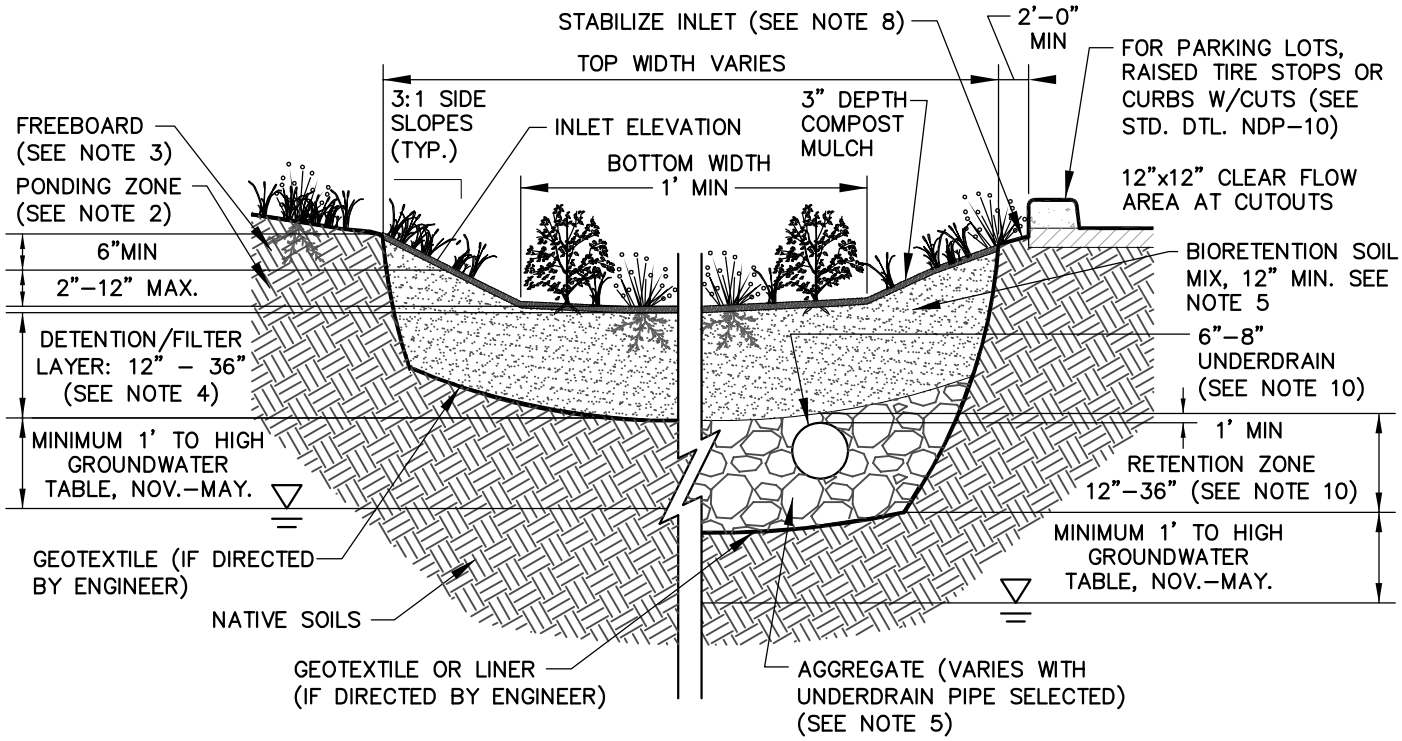

NOTES:

1. PROVIDE PROTECTION FROM ALL VEHICLE TRAFFIC, EQUIPMENT STAGING, AND FOOT TRAFFIC IN PROPOSED INFILTRATION AREAS PRIOR TO, DURING, AND AFTER CONSTRUCTION.

2. DIMENSIONS:
   A. PONDING ZONE (FROM TOP OF GROWING MEDIUM TO OVERFLOW ELEVATION); 2"-6" MINIMUM AND 12" MAXIMUM DEPENDING ON INFILTRATION RATE AND DEVELOPMENT TYPE.
   B. FLAT BOTTOM WIDTH: 1' MINIMUM.
   C. PLANTED SIDE SLOPES OF BASIN: 2.5:1 MAXIMUM ADJACENT TO SIDEWALK, 4:1 MAXIMUM FOR SHEET FLOW INLET.

3. OVERFLOW:
   A. OVERFLOW REQUIRED (PIPE OR OVERLAND) SEE STANDARD DETAILS NDP-6, 7 & 8.
   B. INLET ELEVATION MUST ALLOW FOR 6" OF FREEBOARD, MINIMUM.
   C. PROTECT OVERFLOW INLET FROM DEBRIS AND SEDIMENT WITH STRAINER OR GRATE (PIPE ONLY).
   D. DISCHARGE PER CITY OF BELLEVUE ENGINEERING STANDARDS.

4. BIORETENTION SOIL MIX:
   A. 18" MINIMUM DEPTH, FOR MR 5 ONLY OR RUNOFF TREATMENT.
   B. 12" MINIMUM DEPTH FOR FLOW CONTROL.
   C. COMPACT SUBSOILS MUST BE SCARIFIED TO 6" BELOW THE BIORETENTION SOIL LAYER.

5. SEE CHAPTER D6-04 HEREIN FOR ALL MATERIALS AND SPECIFICATIONS.

6. GEOTECHNICAL ANALYSIS AND STORM DRAINAGE REPORT REQUIRED PER SUBMITTAL REQUIREMENTS, CHAPTER D2 HEREIN.

7. VEGETATION:
   A. FLOOR OF PLANTING ISLAND SHOULD BE PLANTED WITH ZONE 1 TREES, SHRUBS AND GROUND COVER. SEE APPENDIX 3 IN THE *LID TECHNICAL GUIDANCE MANUAL FOR PUGET SOUND* (JANUARY 2005, OR AS AMENDED) OR *"RAIN GARDEN HANDBOOK FOR HOMEOWNERS"* FOR A PLANT LIST.
   B. SIDE SLOPES SHOULD BE PLANTED WITH ZONE 2 OR 3 PLANTS.
   C. USE AT LEAST 3 SPECIES OF EACH PLANT COVER TYPE, NOT INCLUDING TREES.

8. INSTALL APPROXIMATELY 6" THICK LAYER WASHED DRAIN ROCK OR STREAMED COBBLE PER WSDOT 9-03.11(2) (2"-4" MIN) TO TRANSITION FROM INLET OR SPLASH PAD TO BIORETENTION SOIL MIX TO DISSIPATE ENERGY AND/OR DISPERSE FLOW.

9. INSTALL OBSERVATION PORT PER STANDARD DETAIL NDP-9, IF FLOW CONTROL (MR7)AND OR RUNOFF TREATMENT (MR6) IS REQUIRED.

10. RETENTION ZONE OPTIONAL - REQUIRED WITH UNDERDRAIN AND IF NATIVE SOIL INFILTRATION RATE IS LESS THAN 0.25"/HOUR. SEE NDP CHAPTER AND STANDARD DETAIL NDP-3, DETAIL A.

City of Bellevue

STORM AND SURFACE WATER UTILITY

TITLE

BIORETENTION CELL

NO. NDP-2

JANUARY 2014

NO SCALE

BIORETENTION SWALE W/ UNDERDRAIN

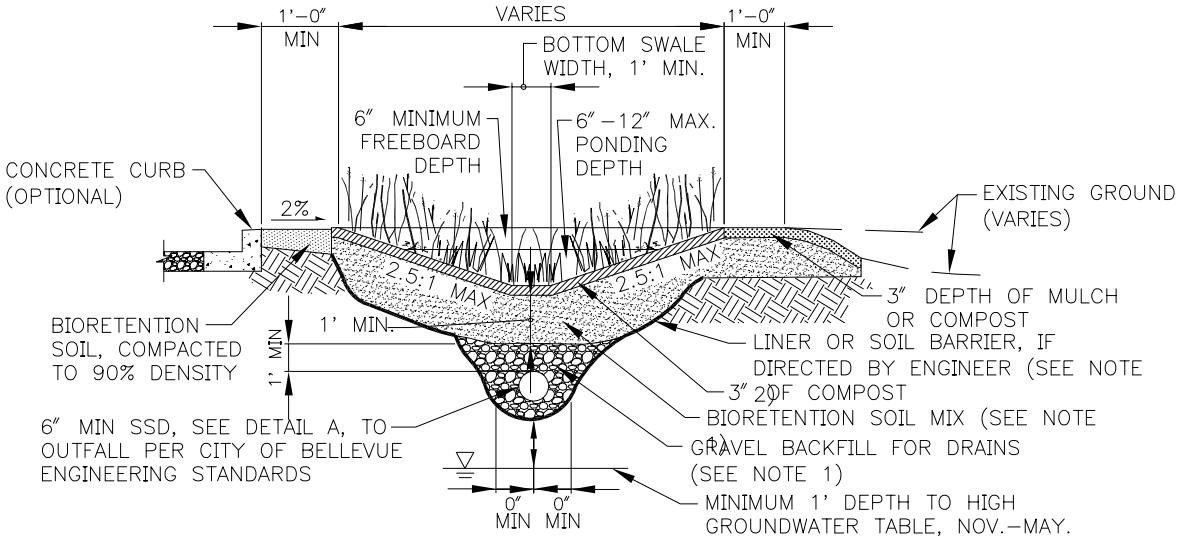

W/O UNDERDRAIN

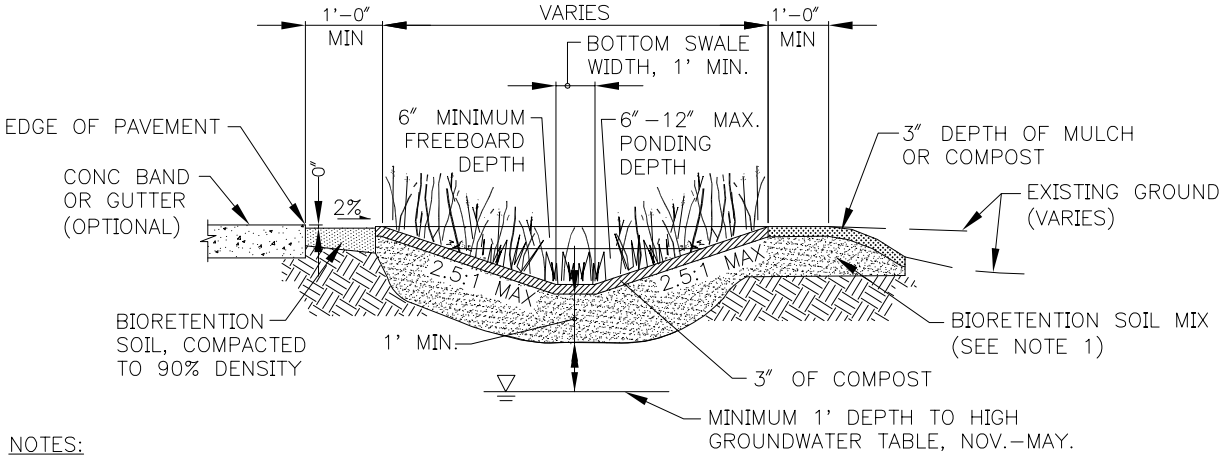

NOTES:

1. SEE CHAPTER D6-04 HEREIN FOR ALL MATERIALS.
2. LINER MAY BE ADDED IN FIELD AS DIRECTED BY ENGINEER.
3. BOTTOM SLOPE LESS THAN 8%. INSTALL CHECK DAMS OR WEIRS FOR SLOPES GREATER THAN 2%.
4. GEOTECHNICAL ANALYSIS AND STORM DRAINAGE REPORT REQUIRED PER SUBMITTAL REQUIREMENTS, CHAPTER D2 HEREIN.

DETAIL A - (SSD) SLOTTED STORM DRAIN

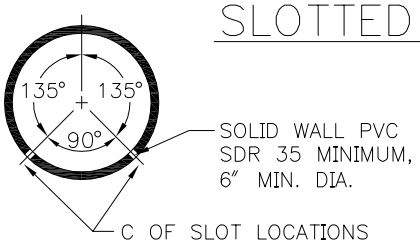

NOTES:

5. SLOT LOCATIONS ARE TO BE 0.04"-0.069" WIDE, (IN 2 ROWS ON 45 DEGREE CENTERS) AND COVER 1/2 THE CIRCUMFERENCE OF THE PIPE. BY 1.0" LONG AND SPACED 0.25" APART.
6. SEE NDP MATERIALS CHAPTER D6-04 FOR OTHER UNDERDRAIN OPTIONS.
7. UNDERDRAIN SLOTS ORIENTED ON BOTTOM OF PIPE.

JANUARY 2014 NO SCALE

City of Bellevue

STORM AND SURFACE WATER UTILITY

TITLE

BIORETENTION SWALE

NO. NDP-3

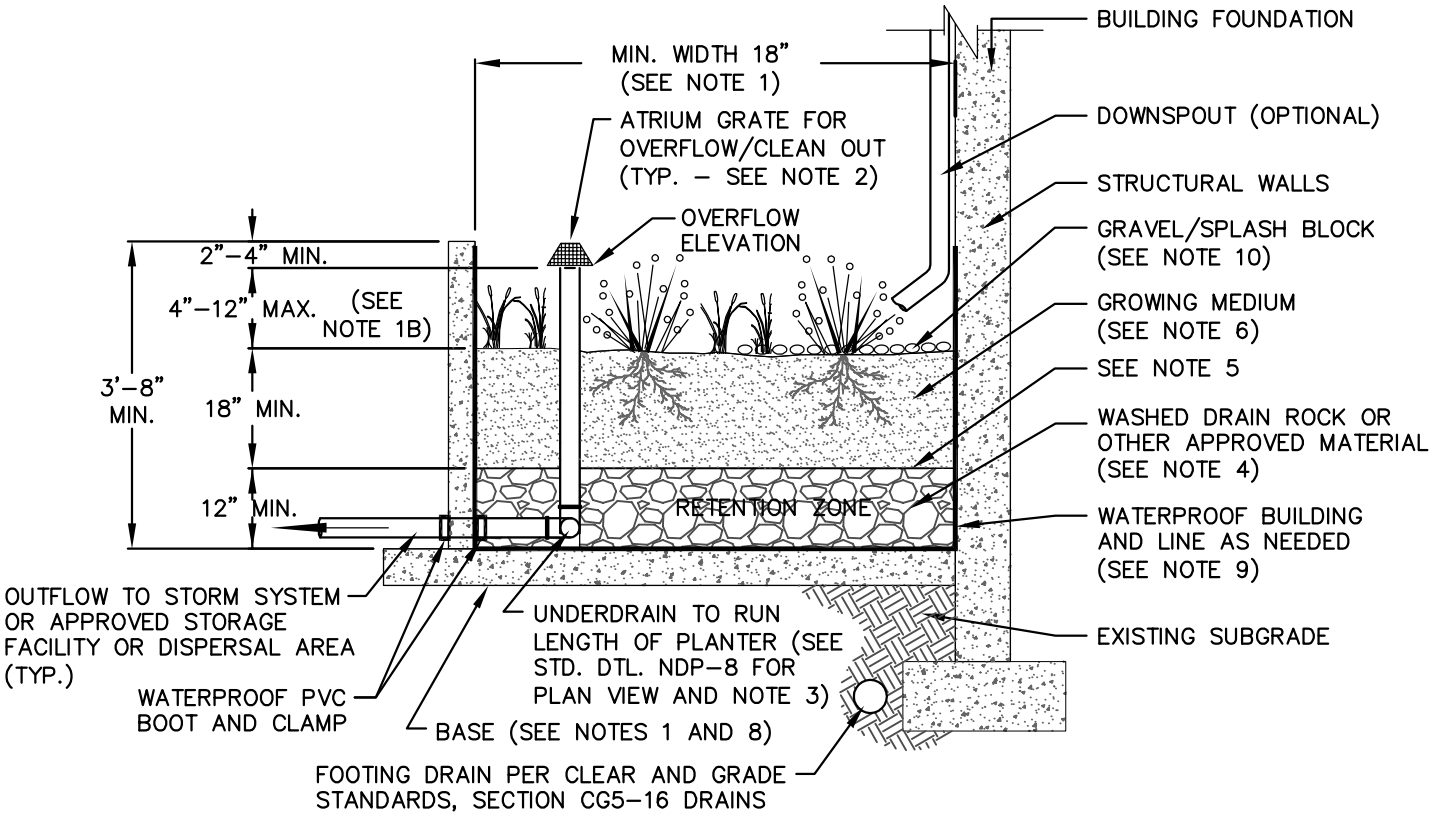

NOTES:

1. DIMENSIONS:
   A. WIDTH OF PLANTER 18" MINIMUM.
   B. PONDING DEPTH (FROM TOP OF GROWING MEDIUM TO OVERFLOW ELEVATION):
      SIMPLIFIED: 4"
      ENGINEERED: 12" MAXIMUM.
   C. SLOPE OF PLANTER: 0.5% OR LESS.

2. OVERFLOW:
   A. OVERFLOW REQUIRED PER STANDARD DETAIL NDP–8.
   B. INLET ELEVATION MUST ALLOW FOR 2" MIN. OF FREEBOARD, 4" MIN. FOR SIMPLIFIED.
   C. PROTECT FROM DEBRIS AND SEDIMENT WITH STRAINER OR GRATE, SEE D6–04 MATERIALS.

3. PIPING: SHALL BE CAST IRON, PVC SDR 35 MINIMUM, OR PVC SCHEDULE 40. 3" PIPE REQUIRED FOR UP TO 1,500 SQ FT OF CONTRIBUTING AREA, OTHERWISE 4" MIN. PIPING MUST HAVE 1% GRADE AND FOLLOW THE UNIFORM PLUMBING CODE IF WITHIN 3' OF A STRUCTURE.

4. DRAIN ROCK:
   A. SIZE PER NDP MATERIALS, CHAPTER D6–04.
   B. DEPTH OF SIMPLIFIED: 12".
   C. DEPTH OF ENGINEERED: 12"–48".

5. SEPARATION BETWEEN DRAIN ROCK AND GROWING MEDIUM: USE GRAVEL LENS (¾ – ¼ INCH WASHED, CRUSHED ROCK 2 TO 3 INCHES DEEP).

6. GROWING MEDIUM: BIORETENTION SOIL MIX PER NDP MATERIALS, CHAPTER D6–04.

7. VEGETATION:
   A. PLANT WITH ZONE 1 OR 2 TREES, SHRUBS, AND/OR GROUND COVER. SEE APPENDIX 3 IN THE *LID TECHNICAL GUIDANCE MANUAL FOR PUGET SOUND* (2005 OR CURRENT) OR *"RAIN GARDEN HANDBOOK FOR HOMEOWNERS"* FOR A PLANT LIST.
   B. PLANTING SHALL CONSIST OF NATIVE SPECIES ABLE TO TOLERATE VARIABLE SOIL MOISTURE CONDITIONS, PONDING WATER FLUCTUATIONS AND VARIABLE SOIL MOISTURE CONTENT.

8. PLANTER WALLS:
   A. MATERIAL SHALL BE STONE, BRICK, CONCRETE, WOOD, OR OTHER DURABLE (NO CHEMICALLY TREATED WOOD).
   B. CONCRETE, BRICK, OR STONE WALLS SHALL BE INCLUDED ON FOUNDATION PLANS.

9. WATERPROOF LINER: SHALL BE 30 MIL PVC OR EQUIVALENT.

10. INSTALL WASHED PEA GRAVEL OR 1"–4" STREAMBED COBBLES PER STANDARD SPECIFICATIONS 9–03.11(2) TO TRANSITION FROM INLET OR SPLASH PAD TO GROWING MEDIUM.

City of Bellevue

STORM AND SURFACE WATER UTILITY

TITLE

BIORETENTION PLANTER – FLOW–THROUGH

NO. NDP–4

JANUARY 2014

NO SCALE

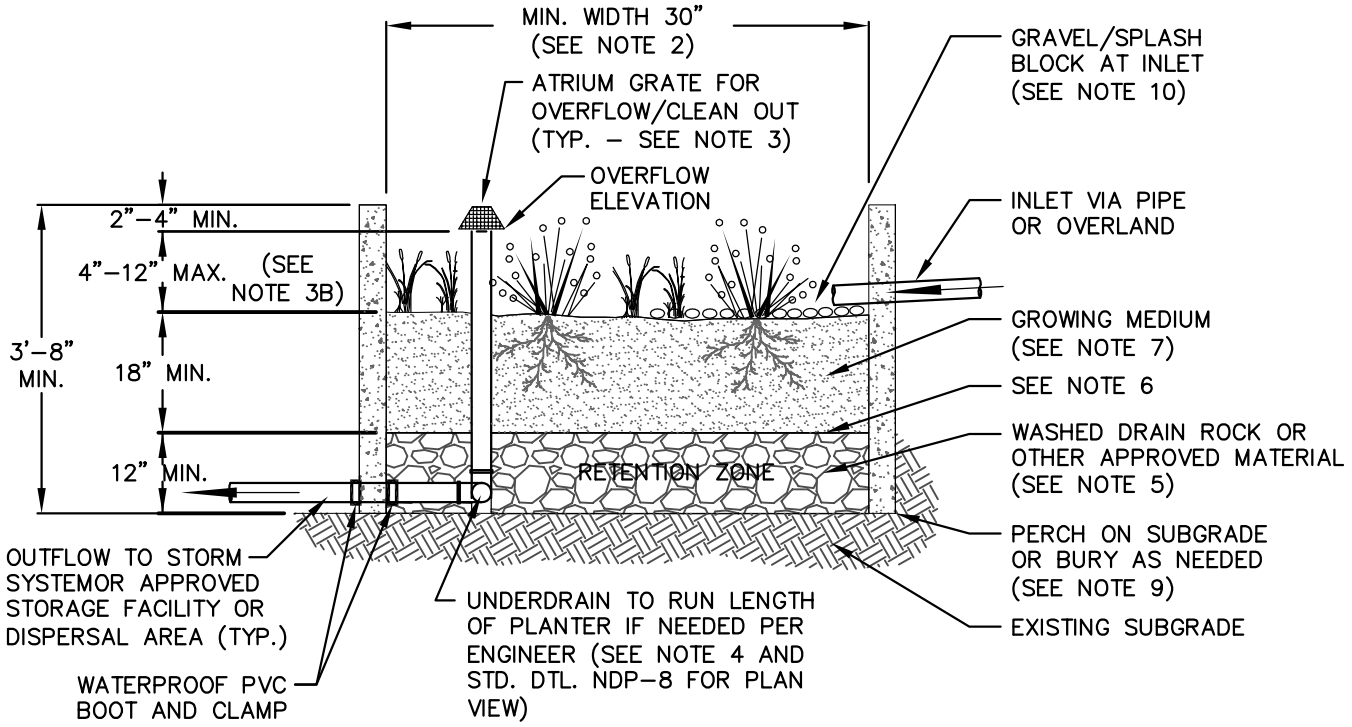

NOTES:

1. PROVIDE PROTECTION FROM ALL VEHICLE TRAFFIC, EQUIPMENT STAGING, AND FOOT TRAFFIC IN PROPOSED INFILTRATION AREAS PRIOR TO, DURING, AND AFTER CONSTRUCTION.

2. DIMENSIONS:
   A. WIDTH OF PLANTER: 30" MINIMUM.
   B. PONDING DEPTH (FROM TOP OF GROWING MEDIUM TO OVERFLOW ELEVATION):
      SIMPLIFIED: 4"
      ENGINEERED: 12" MAXIMUM.
   C. SLOPE OF PLANTER: 0.5% OR LESS.

3. OVERFLOW:
   A. OVERFLOW REQUIRED (PIPE OR WEIR).
   B. INLET ELEVATION MUST ALLOW FOR 2" MIN. OF FREEBOARD, 4" MIN. FOR SIMPLIFIED.
   C. PROTECT PIPE FROM DEBRIS AND SEDIMENT WITH STRAINER OR GRATE, SEE D6–04 MATERIALS.

4. PIPING: SHALL BE CAST IRON, PVC SDR 35 MINIMUM, OR PVC SCHEDULE 40. 3" PIPE REQUIRED FOR UP TO 1,500 SQ FT OF CONTRIBUTING AREA, OTHERWISE 4" MIN. PIPING MUST HAVE 1% GRADE AND FOLLOW THE UNIFORM PLUMBING CODE IF WITHIN 3' OF A STRUCTURE.

5. DRAIN ROCK:
   A. SIZE PER NDP MATERIALS, CHAPTER D6–04.
   B. DEPTH OF SIMPLIFIED: 12".
   C. DEPTH OF ENGINEERED: 0"–48".
   D. DRAIN ROCK NOT REQUIRED FOR INFILTRATION PLANTERS WITHOUT UNDERDRAINS.

6. SEPARATION BETWEEN DRAIN ROCK AND GROWING MEDIUM: USE GRAVEL LENS (¾ – ¼ INCH WASHED, CRUSHED ROCK 2 TO 3 INCHES DEEP).

7. GROWING MEDIUM:.
   BIORETENTION SOIL MIX PER NDP MATERIALS, CHAPTER D6–04.

8. VEGETATION:
   A. PLANT WITH ZONE 1 OR 2 TREES, SHRUBS, AND/OR GROUND COVER. SEE APPENDIX 3 IN THE *LID TECHNICAL GUIDANCE MANUAL FOR PUGET SOUND* (2005 OR CURRENT) OR *"RAIN GARDEN HANDBOOK FOR HOMEOWNERS"* FOR A PLANT LIST.
   B. PLANTING SHALL CONSIST OF NATIVE SPECIES ABLE TO TOLERATE VARIABLE SOIL MOISTURE CONDITIONS, PONDING WATER FLUCTUATIONS AND VARIABLE SOIL MOISTURE CONTENT.

9. PLANTER WALLS:
   MATERIAL SHALL BE STONE, BRICK, CONCRETE, WOOD, OR OTHER DURABLE (NO CHEMICALLY TREATED WOOD).

10. INSTALL WASHED PEA GRAVEL OR 1"–4" STREAMBED COBBLES PER STANDARD SPECIFICATIONS 9–03.11(2) TO TRANSITION FROM INLET OR SPLASH PAD TO GROWING MEDIUM.

11. SEE LAND USE CODE AND D4–07 IN THESE STANDARDS FOR SETBACKS.

12. INSTALL OBSERVATION PORT PER STANDARD DETAIL NDP–9, IF FLOW CONTROL (MR7) AND/OR RUNOFF TREATMENT (MR6) IS REQUIRED.

City of Bellevue

STORM AND SURFACE WATER UTILITY

TITLE

BIORETENTION PLANTER – INFILTRATION

NO. NDP–4A

JANUARY 2014

NO SCALE

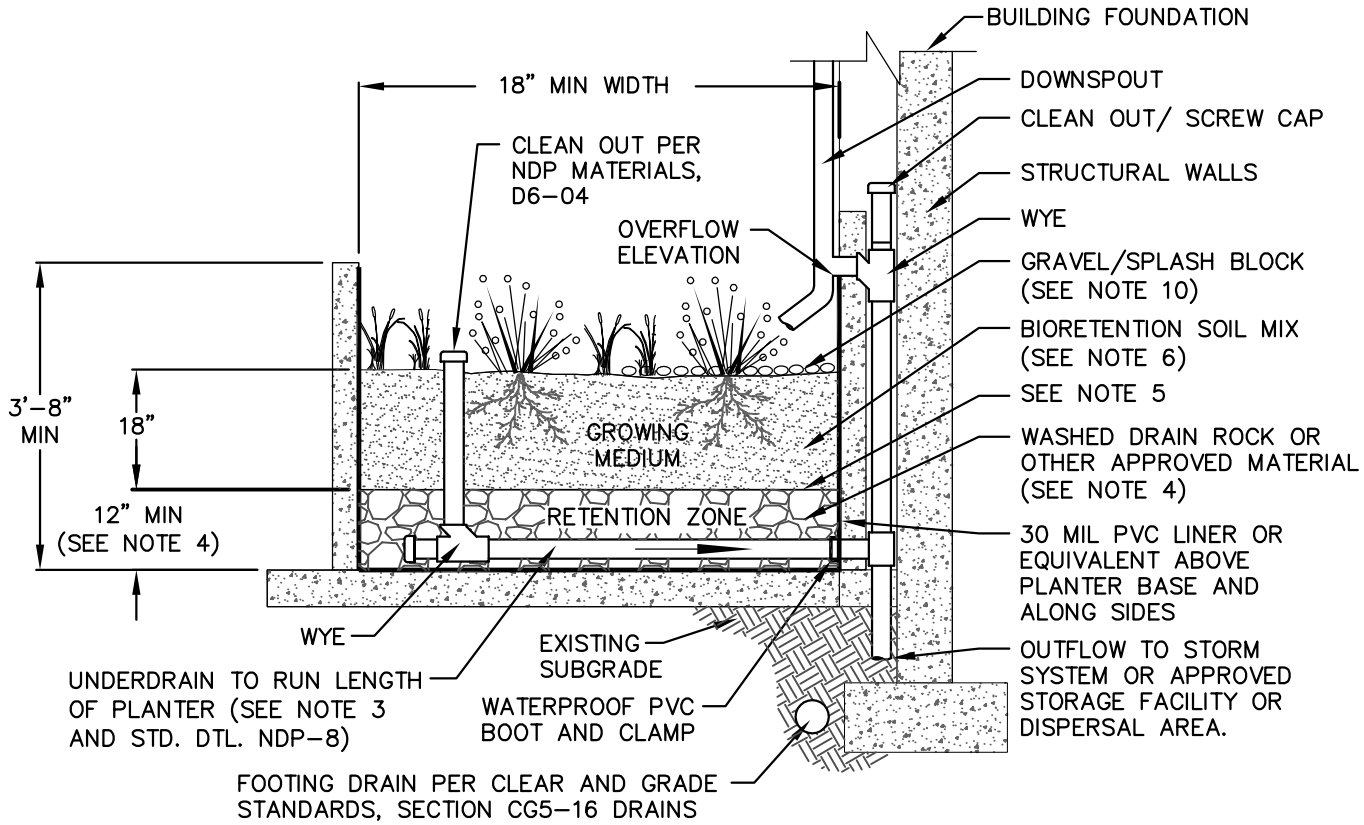

NOTES:

1. DIMENSIONS:
   A. WIDTH OF FLOW-THROUGH PLANTER: 18" MINIMUM.
   B. DEPTH OF PLANTER (FROM TOP OF GROWING MEDIUM TO OVERFLOW ELEVATION): SIMPLIFIED: 4", ENGINEERED: 4"-12" MAXIMUM.
   C. SLOPE OF PLANTER: 0.5% OR LESS.

2. OVERFLOW:
   A. OVERFLOW REQUIRED.
   B. INLET ELEVATION MUST ALLOW FOR 2" MIN. OF FREEBOARD, 4" MIN. FOR SIMPLIFIED.
   C. PROTECT FROM DEBRIS AND SEDIMENT WITH STRAINER OR GRATE.

3. PIPING: SHALL BE CAST IRON, PVC SDR 35 MINIMUM, OR PVC SCHEDULE 40. 3" PIPE REQUIRED FOR UP TO 1,500 SQ FT OF CONTRIBUTING AREA, OTHERWISE 4" MIN. PIPING MUST HAVE 1% GRADE AND FOLLOW THE UNIFORM PLUMBING CODE IF WITHIN 3' OF A STRUCTURE.

4. DRAIN ROCK:
   A. SIZE PER NDP MATERIALS, CHAPTER D6-04.
   B. DEPTH OF SIMPLIFIED: 12".
   C. DEPTH OF ENGINEERED: 12"-48".

5. SEPARATION BETWEEEN DRAIN ROCK AND GROWING MEDIUM: USE GRAVEL LENS (¾ – ¼ INCH WASHED, CRUSHED ROCK 2 TO 3 INCHES DEEP).

6. GROWING MEDIUM: BIORETENTION SOIL MIX PER NDP MATERIALS, CHAPTER D6-04.

7. VEGETATION:
   A. PLANT WITH ZONE 1 OR 2 TREES, SHRUBS, AND GROUND COVER. SEE APPENDIX 3 IN THE *LID TECHNICAL GUIDANCE MANUAL FOR PUGET SOUND* (JANUARY 2005, OR CURRENT) OR *"RAIN GARDEN HANDBOOK FOR HOMEOWNERS"* FOR A PLANT LIST.
   B. PLANTING SHALL CONSIST OF NATIVE SPECIES ABLE TO TOLERATE VARIABLE SOIL MOISTURE CONDITIONS, PONDING WATER FLUCTUATIONS AND VARIABLE SOIL MOISTURE CONTENT.

8. PLANTER WALLS:
   A. MATERIAL SHALL BE STONE, BRICK, CONCRETE, WOOD, OR OTHER DURABLE (NO CHEMICALLY TREATED WOOD).
   B. CONCRETE, BRICK, OR STONE WALLS SHALL BE INCLUDED ON FOUNDATION PLANS.

9. WATERPROOF LINER: SHALL BE 30 MIL PVC OR EQUIVALENT FOR FLOW-THROUGH FACILITIES.

10. INSTALL WASHED PEA GRAVEL OR 1-4" STREAM BED COBBLE PER STANDARD SPECIFICATIONS 9-03.11(2) TO TRANSITION FROM INLET OR SPLASH PAD TO GROWING MEDIUM.

City of Bellevue

STORM AND SURFACE WATER UTILITY

TITLE

BIORETENTION PLANTER – FLOW –THROUGH WITH OVERFLOW CONNECTED TO STORM SYSTEM

NO. NDP-5

JANUARY 2014

NO SCALE

PLAN – BIORETENTION CELL OVERFLOW WITH CONVEYANCE FURROW

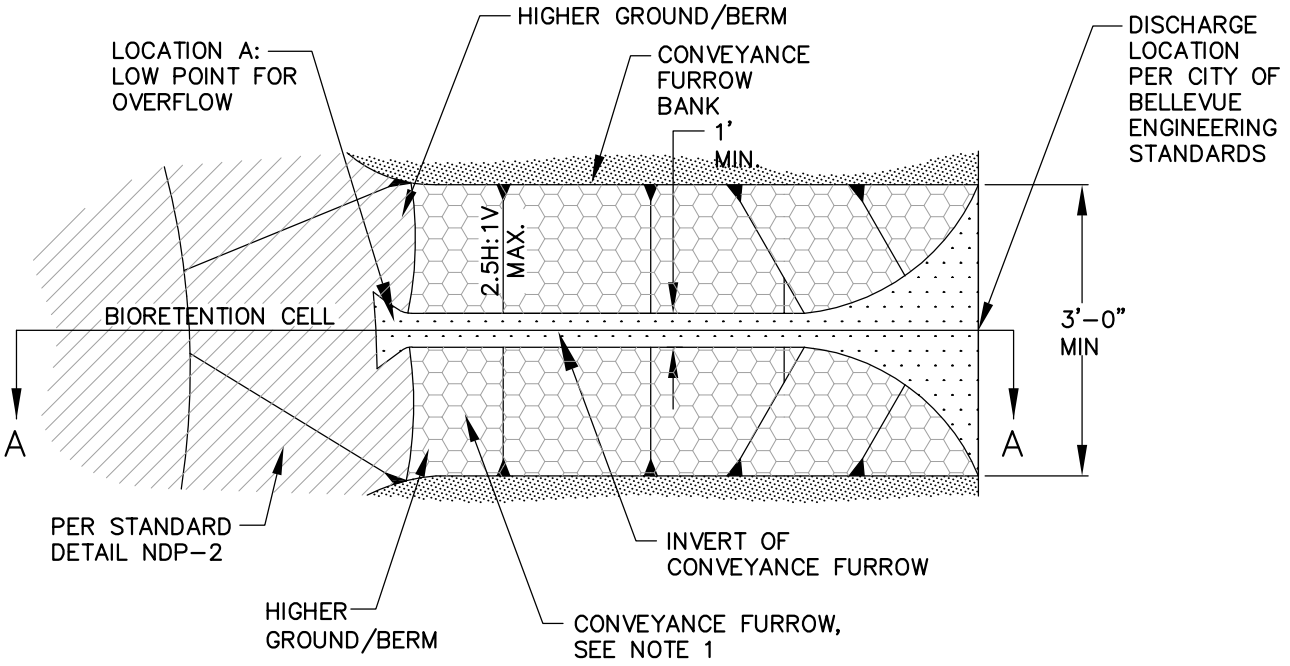

SECTION A – BIORETENTION CELL OVERFLOW WITH CONVEYANCE FURROW

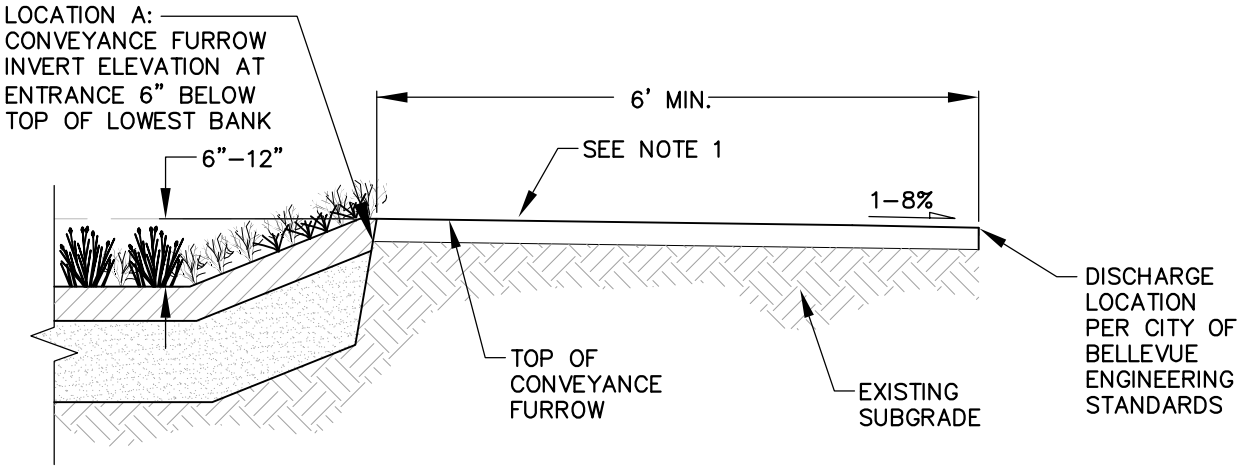

NOTE:

1. LINE CONVEYANCE FURROW WITH STREAMBED COBBLE PER STANDARD SPECIFICATIONS 9–03.11(2) (MIN 6" DEPTH) FOR DESIGN FLOW UP TO 4 F.P.S., OR MIN. 12" BIORETENTION SOIL MIX FOR DESIGN FLOW LESS THAN 4 F.P.S. AND PLANT WITH BIORETENTION GROUND COVERS OR TURF, OR PER ENGINEER'S DESIGN.

JANUARY 2014 NO SCALE

City of Bellevue

STORM AND SURFACE WATER UTILITY

TITLE

BIORETENTION OVERFLOW WITH CONVEYANCE FURROW

NO. NDP–6

PLAN – BIORETENTION CELL OVERFLOW WITH PIPE CULVERT

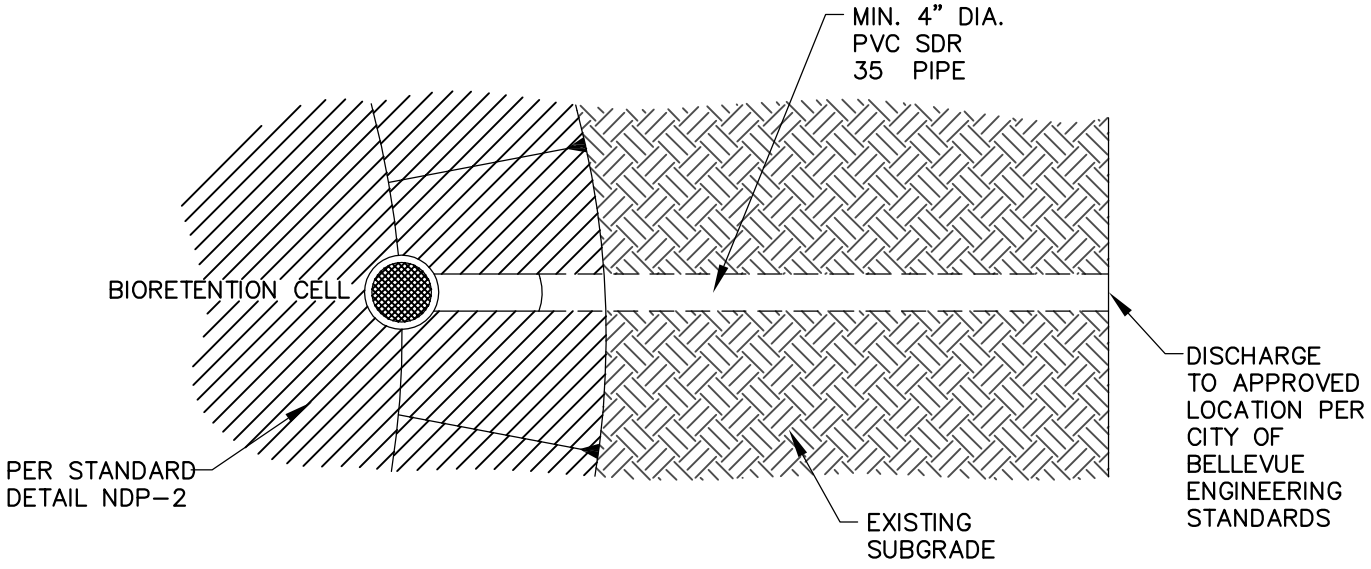

SECTION A – BIORETENTION CELL OVERFLOW WITH PIPE CULVERT

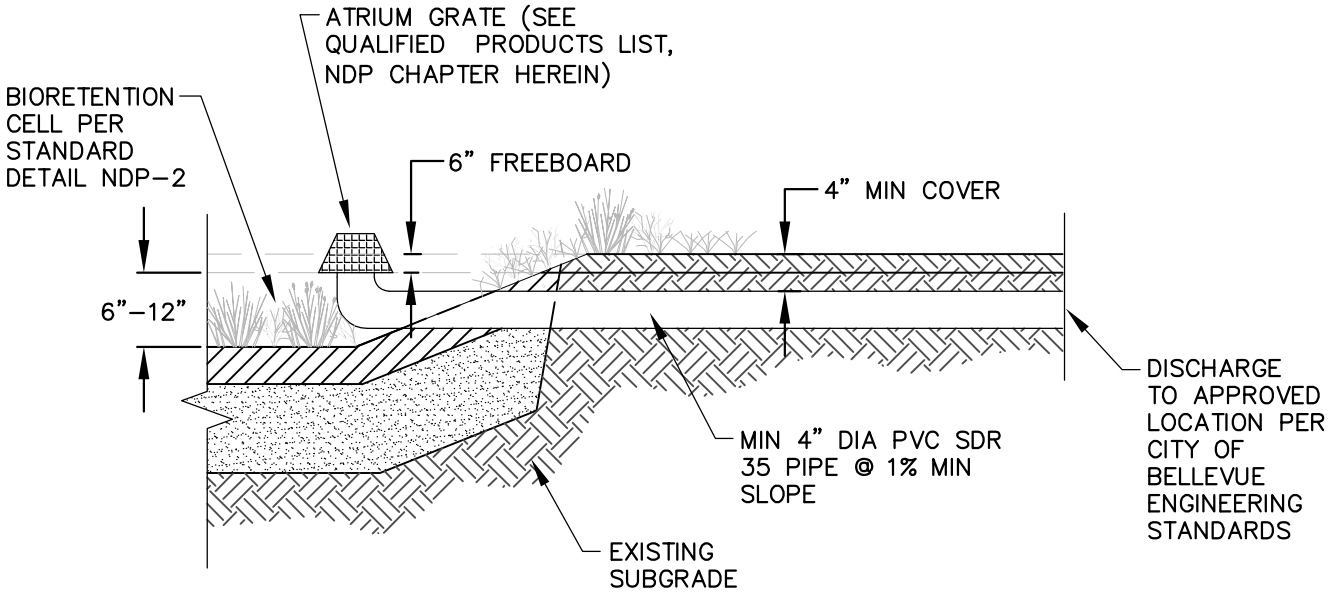

City of Bellevue

STORM AND SURFACE WATER UTILITY

TITLE

BIORETENTION OVERFLOW WITH PIPE CULVERT

NO. NDP–7

JANUARY 2014

NO SCALE

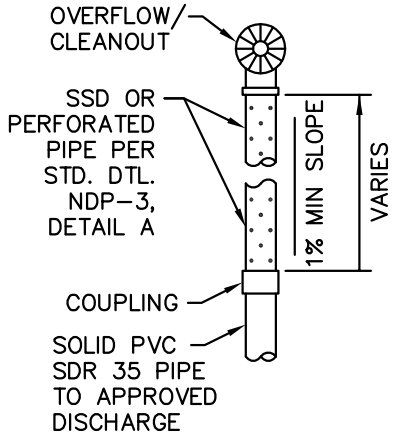

A – PLAN VIEW

PIPE W/ UNDERDRAIN
& DISCHARGE POINT

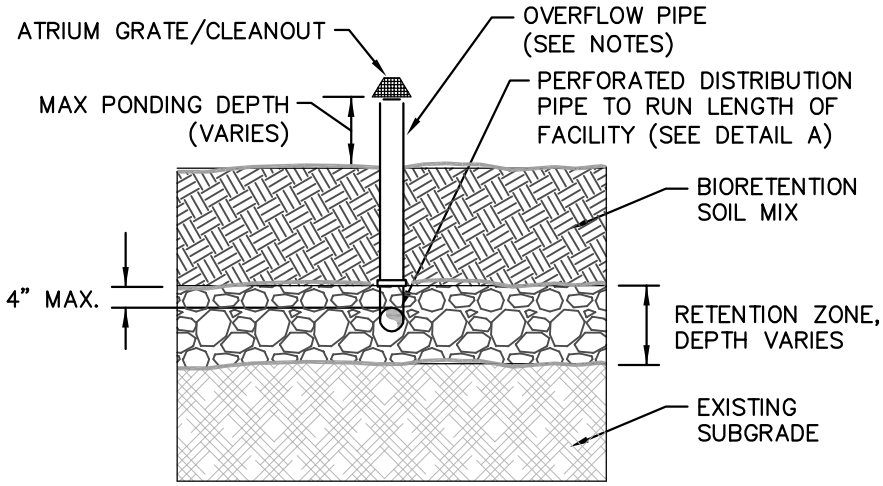

INFILTRATION

OVERFLOW DIRECTED TO DRAIN ROCK,
0.25 INCH/HR. OR GREATER
NATIVE SOIL INFILTRATION RATE.

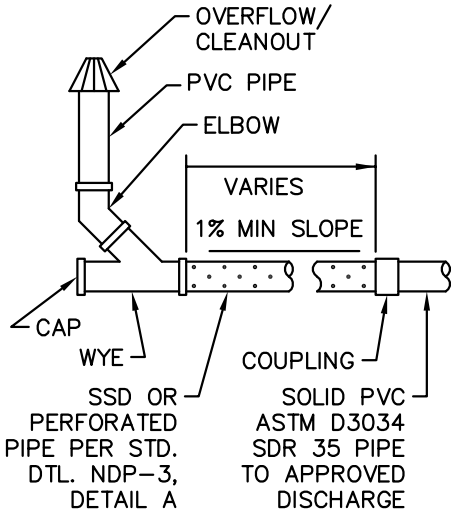

A – CROSS SECTION VIEW

PIPE W/ UNDERDRAIN
& DISCHARGE POINT

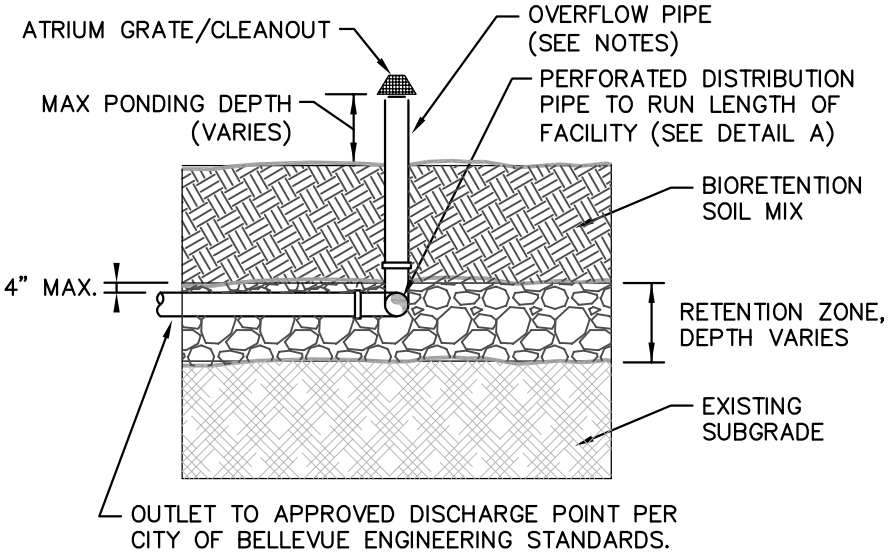

PARTIAL INFILTRATION OR FLOW THROUGH

LESS THAN 0.25 INCH/HR
NATIVE SOIL INFILTRATION RATE

NOTES:

1. PIPE OVERFLOW NOT REQUIRED IF FACILITY INFILTRATES THE 100-YEAR STORM OR MEETS FLOW CONTROL STANDARD.
2. OVERLAND OVERFLOW PATH REQUIRED – ADEQUATELY STABILIZE WITH STREAMBED COBBLE (STANDARD SPECIFICATIONS 9-03.11(2)) AND DIRECT TO AN APPROPRIATE DOWNSTREAM DRAINAGE AREA.
3. OVERFLOW PIPE: PVC, 3" MINIMUM. USE SCHEDULE 80 FOR 3" DIAMETER PIPE, FOR ALL OTHERS USE SDR35.

JANUARY 2014 NO SCALE

City of Bellevue

STORM AND SURFACE WATER UTILITY

TITLE

OVERFLOW CONFIGURATIONS FOR BIORETENTION

NO. NDP-8

HOW TO CONTRUCT AND INSTALL AN OBSERVATION PORT TO MEASURE WATER DEPTH

MATERIALS:

- 2–10 FEET OF 3–INCH DIAMETER PVC PIPE (SCH40 IF IN FACILITY, SCH80 IF OFFSET).
- 4 FEET OF 3–INCH DIAMETER WELL SCREEN (CANAL LAKE SCREEN) (0.01–INCH SLOTS)
- 3–INCH DIAMETER COUPLING
- TEST PLUG (EXPANDING) AND/OR LOOSE FITTING TOP CAP
- 3–INCH DIAMETER PVC END CAP
- BENTONITE (USE MEDIUM–SIZED CHIPS) OR CONCRETE
- SAND PACK (20/30 MESH)

INSTRUCTIONS:

1. AUGER THE PORT HOLE.
   BORE THE PORT HOLE IN BOTTOM OF FACILITY OR RUN PIPE FROM TOP OF FACILITY ALONG BOTTOM TO OBSERVATION PORT VERTICAL PIPE IN BERM (SEE DETAIL A) USING A FOUR–INCH DIAMETER HAND AUGER OR POST–HOLE DIGGER. THE PORT HOLE SHOULD EXTEND 6" BELOW THE BOTTOM OF THE FACILITY.
2. CONSTRUCT THE OBSERVATION PORT CASING.
   MEASURE THE DISTANCE FROM THE EXISTING GRADE TO THE BOTTOM OF THE PORT HOLE AND RECORD THIS DISTANCE PERMANENTLY IN THE STORMWATER OPERATIONS & MAINTENANCE MANUAL AND ON THE AS–BUILT DRAWING. CUT THE WELL SCREEN AND RISER TO FIT. WHEN ASSEMBLED, THE PVC COUPLING, WHICH JOINS THE WELL SCREEN AND THE RISER, SHOULD BE 14 INCHES BELOW THE GROUND SURFACE. THE SOLID PVC RISER SHOULD EXTEND ABOVE THE OVERFLOW ELEVATION. DRILL ONE–QUARTER INCH HOLES IN THE BOTTOM AND SIDES OF THE WELL POINT TO ALLOW WATER TO FREELY FLOW. ASSEMBLE THE COMPONENTS.
3. PACK THE CASING WITH SAND.
   PLACE SAND IN THE BOTTOM 2 TO 6 INCHES OF THE BORE HOLE. CENTER THE CASING IN THE PORT HOLE. POUR SAND AROUND THE OUTSIDE OF THE CASING. TAMP THE SAND AS YOU POUR. ADD SAND TO A DEPTH OF FOUR INCHES ABOVE THE COUPLING.
4. SEAL WITH BENTONITE OR CONCRETE.
   TO PREVENT SURFACE WATER FROM FLOWING DOWN THE OUTSIDE OF THE CASING, FILL THE REMAINER OF THE HOLE WITH A LAYER OF BENTONITE OR CONCRETE ON TOP OF THE SAND. IF CONCRETE IS USED, IT SHOULD RISE ONE–HALF INCH ABOVE THE GROUND AND SHOULD SLOPE AWAY FROM THE CASING.
5. LABEL AND MARK THE CASING.
   USE A PERMANENT MARKER TO WRITE AN IDENTIFICATION NUMBER ON THE SIDE OF THE CASING. MARK A REFERENCE POINT ON THE TOP EDGE OF RISER FROM WHICH ALL MEASUREMENTS WILL BE TAKEN.
6. READ WATER TABLE DEPTH:
   A. MEASURE DISTANCE FROM TOP EDGE OF RISER TO SOIL SURFACE.
   B. MEASURE DISTANCE FROM TOP EDGE OF RISER TO WATER SURFACE INSIDE OF PIPE.
   C. SUBTRACT A FROM B FOR DEPTH TO WATER TABLE.

MODIFICATION FOR CREST GAGE (OPTIONAL)

MATERIALS:

- 4–6 FEET OF 1–INCH DIAMETER PVC
- CORK DUST

INSTRUCTIONS:

1. CUT THE CREST GAGE TO LENGTH.
   SIZE THE CREST GAGE TO FIT INSIDE THE OBSERVATION PORT CASING. THE CREST GAGE SHOULD SIT IN THE BOTTOM OF THE CASING AND BE FLUSH WITH THE TOP OF THE CASING.
2. ADD CORK DUST.
   REMOVE THE CREST GAGE FROM THE OBSERVATION PORT CASING. ADD ABOUT ONE–HALF TEASPOON OF CORK DUST INTO THE OBSERVATION PORT CASING. IF YOU MAKE YOUR OWN CORK DUST, GRIND IT TO THE TEXTURE OF COARSELY GROUND COFFEE. PLACE THE CREST GAGE IN THE OBSERVATION PORT. REPLACE THE OBSERVATION PORT TOP PLUG OR CAP.
3. READING THE MAXIMUM WATER LEVEL.
   A CREST GAGE RECORDS THE MAXIMUM WATER LEVEL BETWEEN READINGS. AS THE WATER TABLE RISES, SO WILL THE CORK DUST. AS THE WATER LEVEL DROPS, A RING OF CORK DUST REMAINS ON THE CREST GAGE. REMOVE THE CREST GAGE FROM THE OBSERVATION PORT. MEASURE FROM THE TOP OF THE CREST GAGE TO THE CORK DUST RING. CONVERT THE MEASUREMENT TO DEPTH OF WATER TABLE BELOW GROUND SURFACE BY SUBTRACTING THE LENGTH OF THE RISER ABOVE THE GROUND. THIS MEASUREMENT IS THE DEPTH OF THE MAXIMUM WATER LEVEL SINCE THE LAST READING.
4. RINSE DOWN CORK DUST.
   AFTER YOU RECORD THE MEASUREMENT, REMOVE THE CORK DUST FROM THE CREST GAGE. RINSE THE INSIDE WALLS OF THE OBSERVATION PORT CASING WITH A SQUIRT BOTTLE. PLACE THE CREST GAGE IN THE OBSERVATION PORT. REPLACE THE OBSERVATION PORT TOP CAP.
5. INSTALL WITHIN THE 3" PVC OBSERVATION PORT.

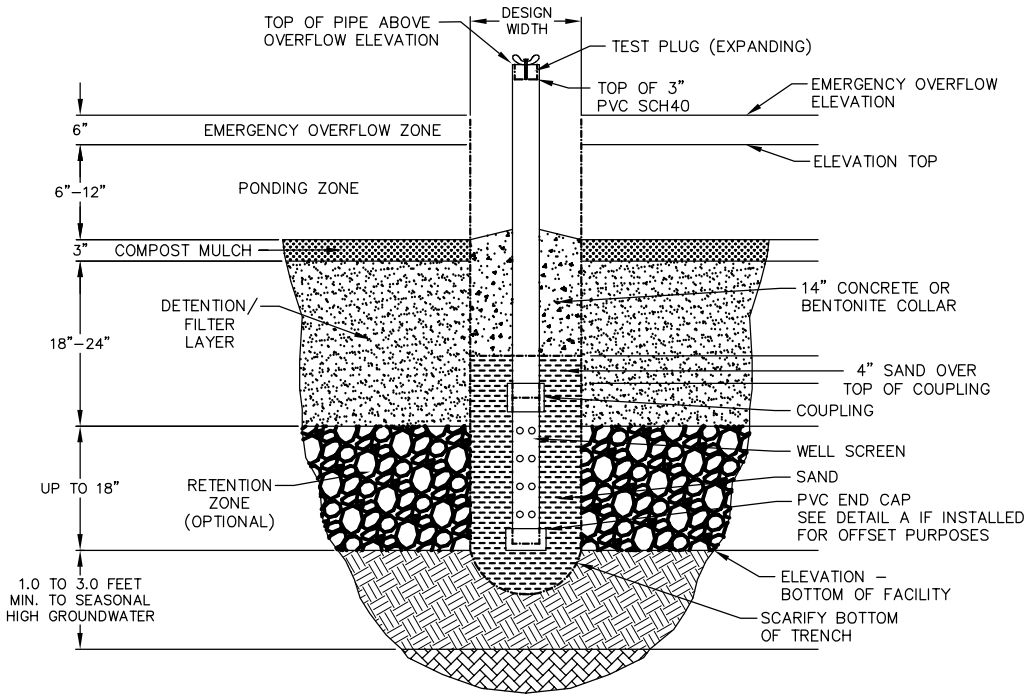

DETAIL A
OFFSET OBSERVATION PORT

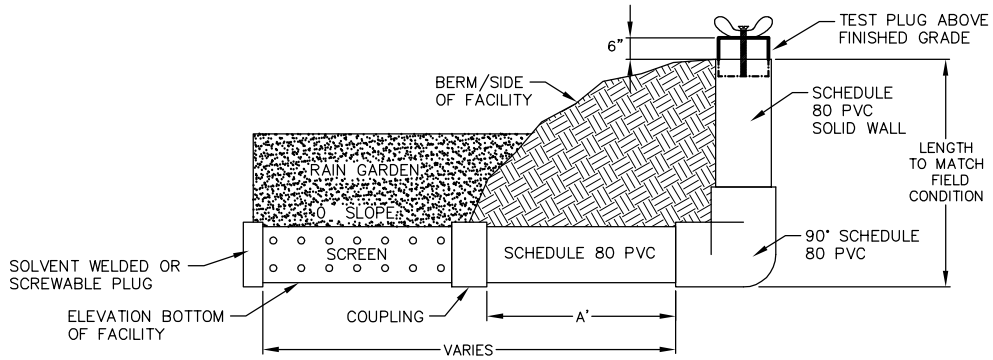

DETAIL A NOTES:

1. EXTEND OBSERVATION PORT ACROSS BOTTOM OF FACILITY

City of Bellevue

STORM AND SURFACE WATER UTILITY

TITLE

OBSERVATION PORT FOR BIORETENTION

NO. NDP–9

JANUARY 2014

NO SCALE

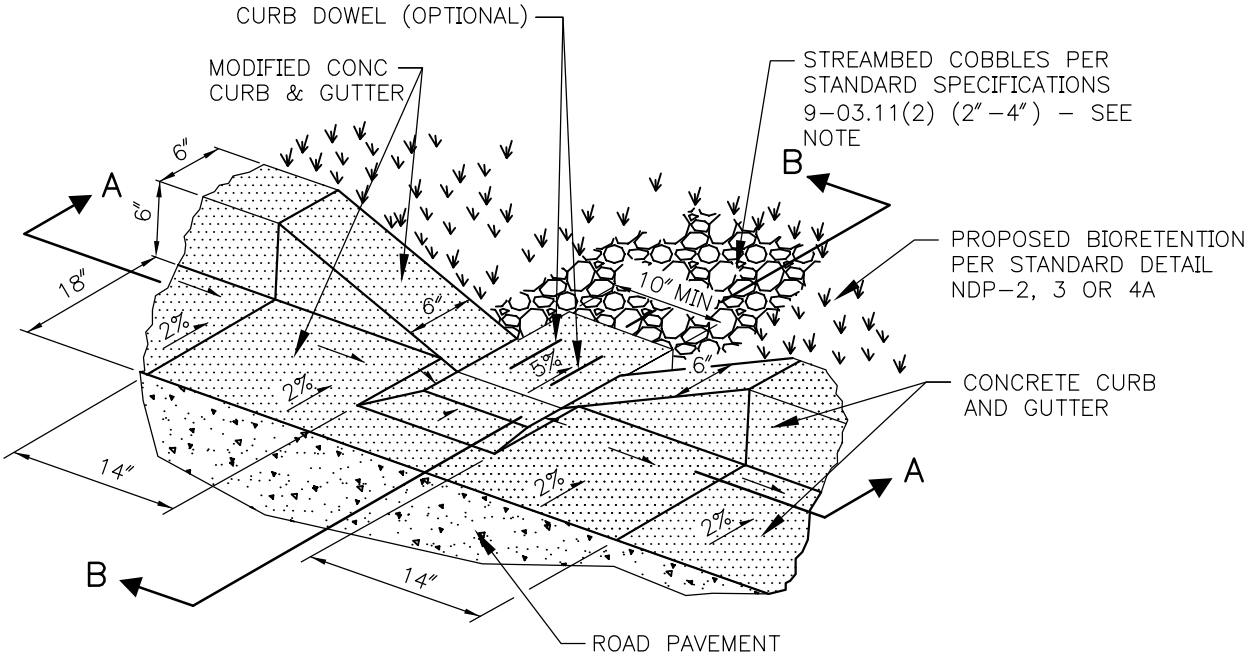

SECTION A-A

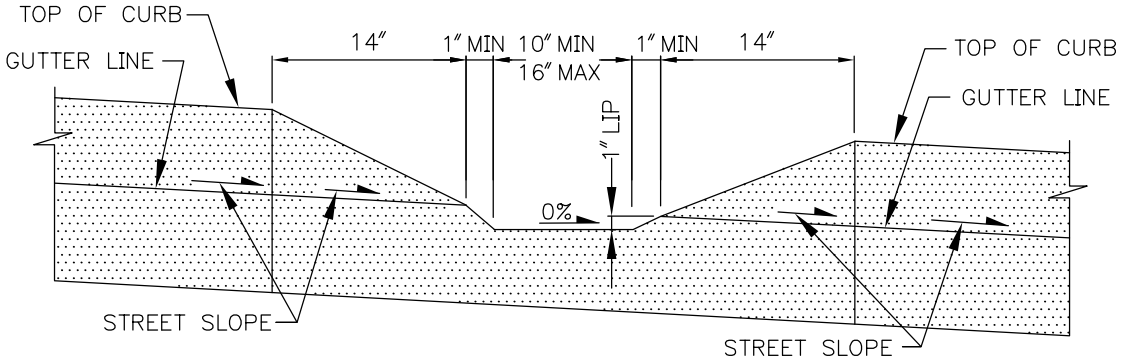

SECTION B-B

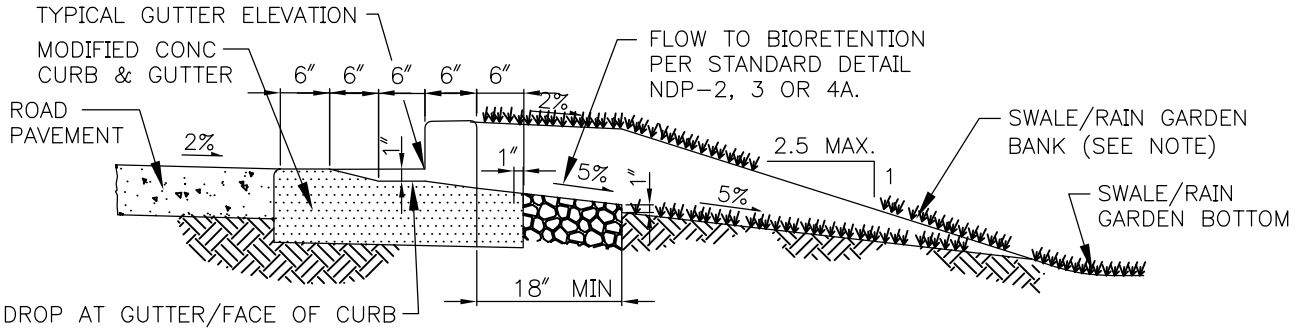

NOTE:

MODIFY INLET TO BIORETENTION PLANTER AS NEEDED TO PREVENT EROSION.

City of Bellevue

STORM AND SURFACE WATER UTILITY

TITLE

DRAIN CURB CUT OPENING FOR BIORETENTION

JANUARY 2014

NO SCALE

NO. NDP-10

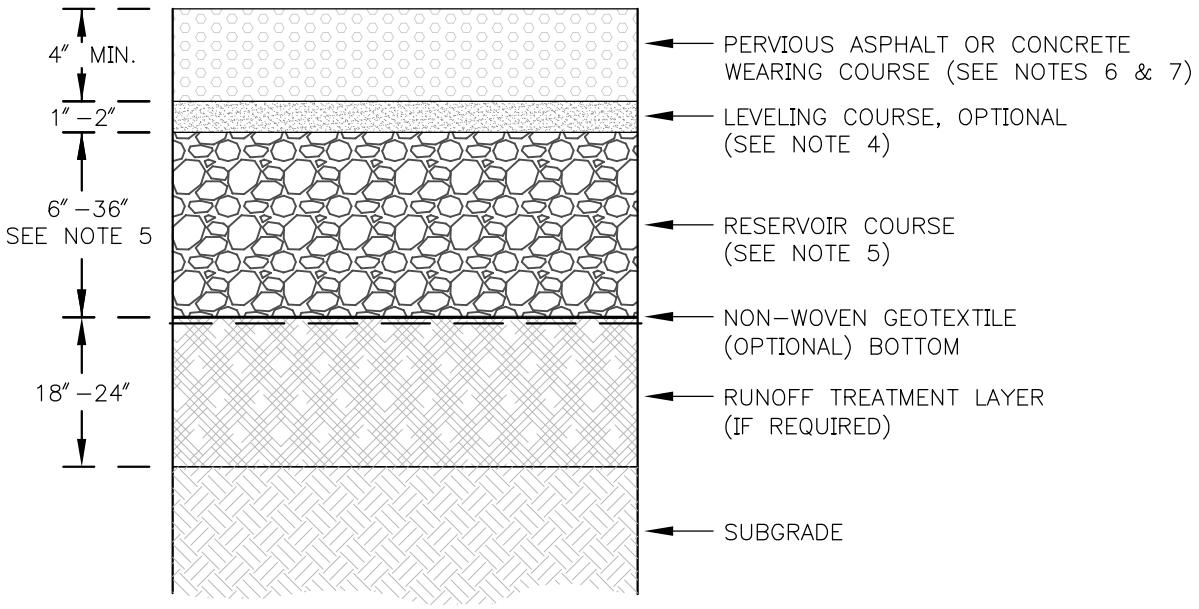

NOTES:

1. PERVIOUS PAVEMENT WITHIN CITY RIGHT–OF–WAY REQUIRES APPROVAL BY THE CITY WHEN PLACED BENEATH A TRAVELED WAY. THESE GUIDELINES PROVIDE A MINIMUM DEPTH FOR THE HYDROLOGIC PERFORMANCE OF THE PERVOUS PAVEMENT. THE STRUCTURAL CAPACITY OF PAVEMENT SECTIONS WHEN SUBJECT TO VEHICULAR LOADS DEPENDS ON SEVERAL FACTORS AND MUST BE DESIGNED BY A LICENSED PROFESSIONAL ENGINEER.
2. LONGITUDINAL SLOPE, 0 TO 5% MAX. FOR PERVIOUS ASPHALT, 6% MAX. FOR PERVIOUS CONCRETE.
3. USE CHECK DAM OR OTHER METHODS TO MAXIMIZE PONDING IN THE SUBSURFACE FOR LONGITUDINAL SLOPES EXCEEDING 2%. SEE STANDARD DETAIL NDP–15.
4. LEVELING COURSE MATERIALS: 1.5″ TO U.S. NO. 8 UNIFORMLY GRADED, CRUSHED (ANGULAR), THOROUGHLY WASHED STONE.
5. RESERVOIR COURSE MINIMUM DEPTH OF 6″ WITHOUT UNDERDRAIN, 22″ MINIMUM WITH UNDERDRAIN.
6. PERVIOUS CONCRETE MUST BE INSTALLED BY A CERTIFIED PERVIOUS CONCRETE INSTALLER. PERVIOUS ASPHALT MUST BE INSTALLED BY AN EXPERIENCED PERVIOUS ASPHALT INSTALLER.
7. SEE NDP CHAPTER D6–04 HEREIN FOR ALL MATERIALS.

City of Bellevue

STORM AND SURFACE WATER UTILITY

TITLE

PERVIOUS ASPHALT OR CONCRETE PAVEMENT SECTION

NO. NDP–11

JANUARY 2014

NO SCALE

PERVIOUS CONCRETE BLOCK OR "PAVER" SYSTEMS

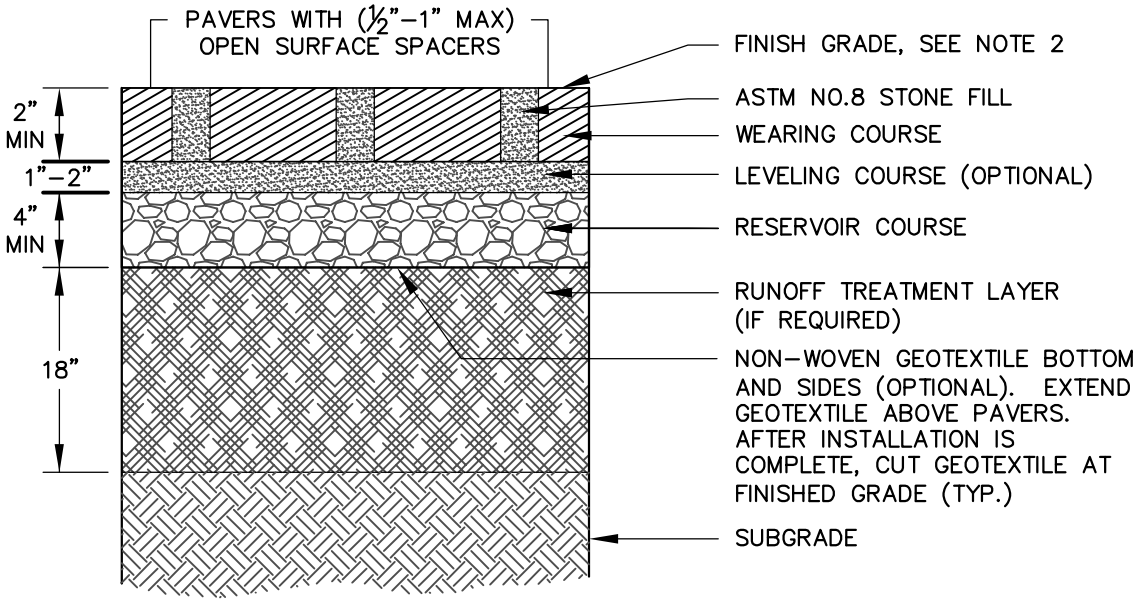

GRASS PAVING

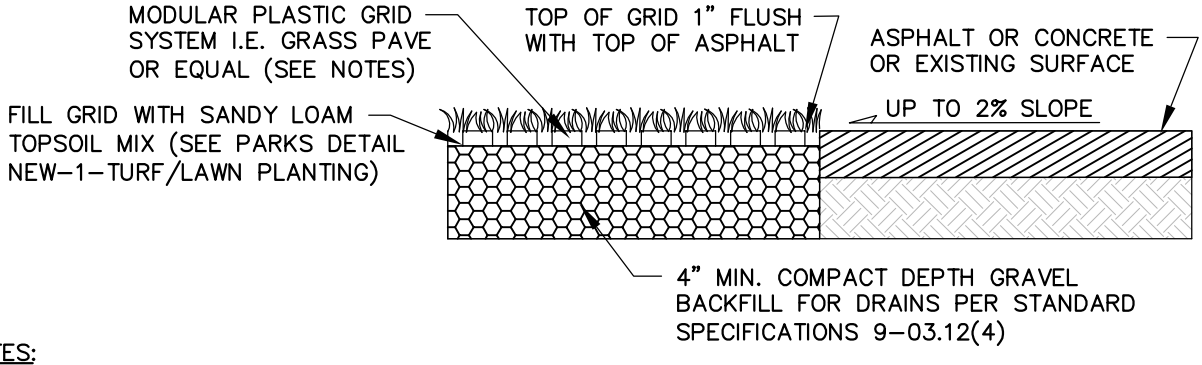

NOTES:

1. PERVIOUS PAVEMENT WITHIN CITY RIGHT–OF–WAY REQUIRES APPROVAL BY THE CITY WHEN PLACED BENEATH A TRAVELED WAY. THESE GUIDELINES PROVIDE A MINIMUM DEPTH FOR THE HYDROLOGIC PERFORMANCE OF THE PERVIOUS PAVEMENT. THE STRUCTURAL CAPACITY OF PAVEMENT SECTIONS WHEN SUBJECT TO VEHICULAR LOADS DEPENDS ON SEVERAL FACTORS AND MUST BE DESIGNED BY A LICENSED PROFESSIONAL ENGINEER.
2. LONGITUDINAL SLOPE, 0 TO 10% MAX.
3. USE CHECK DAM OR OTHER METHODS TO MAXIMIZE PONDING IN THE SUBSURFACE IF SLOPE EXCEEDS 2%, PER STANDARD DETAIL NDP–15.
4. INSTALL PER LID TECHNICAL GUIDANCE MANUAL FOR PUGET SOUND (2005 OR CURRENT) OR MANUFACTURER.
5. SEE NDP CHAPTER D6–04 HEREIN FOR ALL MATERIALS.
6. SOME INTERLOCKING CONCRETE PAVER SYSTEMS RECOMMEND A BASE COURSE BETWEEN THE LEVELING AND RESERVOIR COURSES.

City of Bellevue

STORM AND SURFACE WATER UTILITY

TITLE

PERVIOUS PAVER SYSTEMS

JANUARY 2014

NO SCALE

NO. NDP–12

PLAN

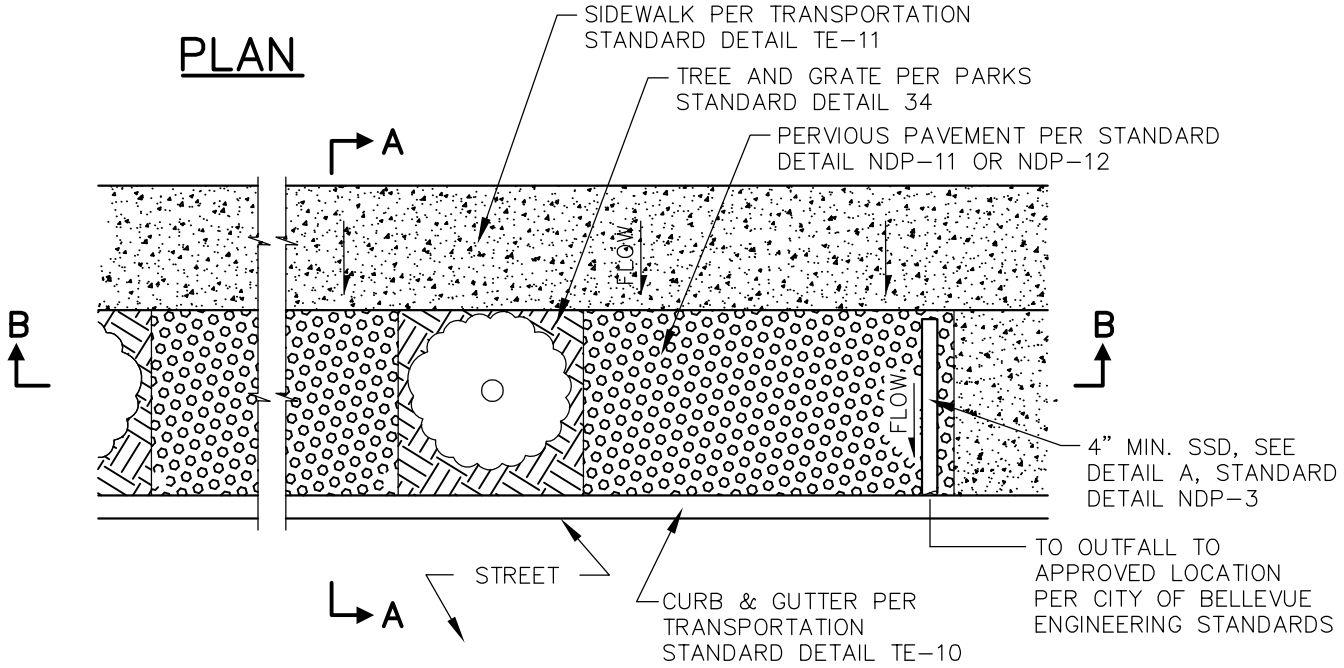

SECTION A-A

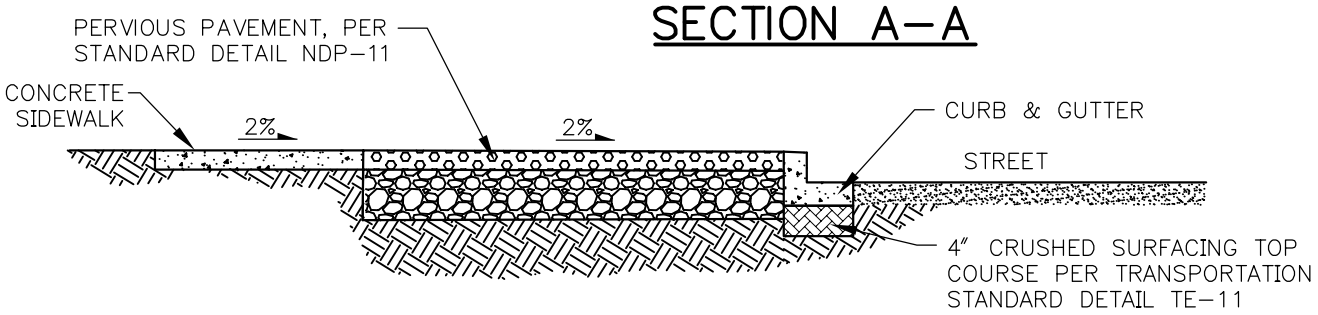

SECTION B-B

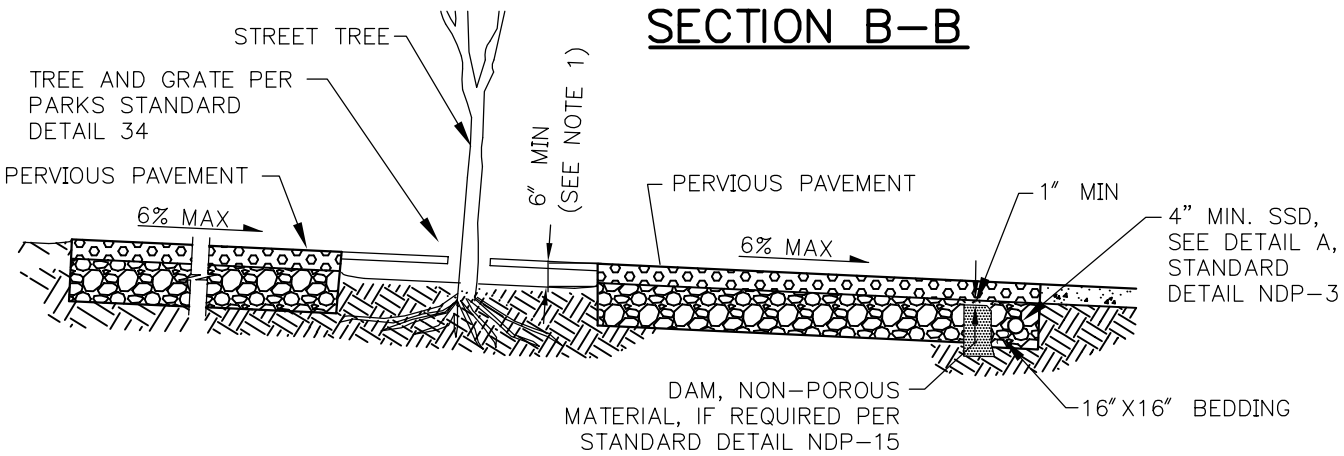

NOTE:

1. 6" MIN. DEPTH IN THE TREE PIT APPLIES TO PERVIOUS CEMENT CONCRETE SIDEWALK ONLY. IF OTHER PERVIOUS PAVER MATERIAL USED, NO MIN. DISTANCE REQUIRED.

City of Bellevue

STORM AND SURFACE WATER UTILITIES

TITLE

PERVIOUS PAVEMENT SIDEWALK IN PLANTING STRIP

NO. NDP-13

JANUARY 2014

NO SCALE

PERVIOUS PAVEMENT SIDEWALK ADJACENT TO CURB

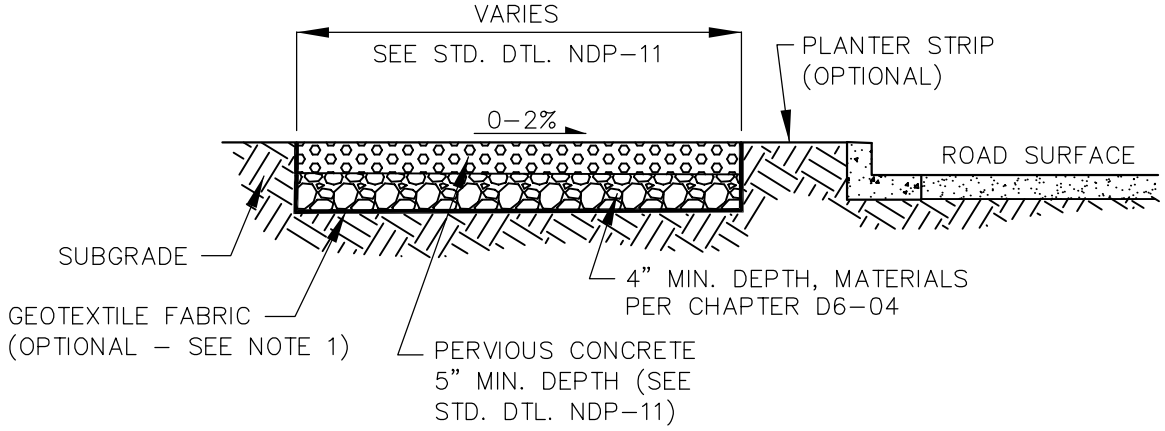

PERVIOUS PAVEMENT SIDEWALK ADJACENT TO BIORETENTION OR DITCH

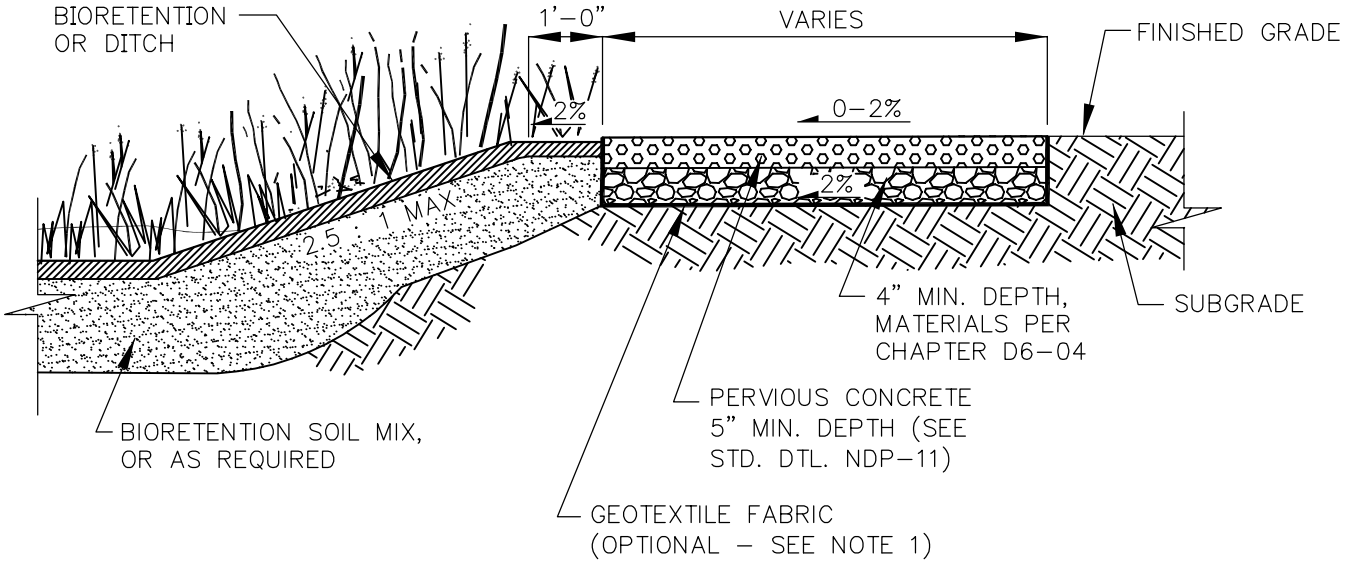

NOTES:

1. GEOTEXTILE FOR UNDERGROUND SEPARATION REQUIRED ONLY PER ENGINEER DESIGN.
2. SUBGRADE SHOULD NOT BE COMPACTED.
3. COVER TO PROTECT SURFACE UNTIL FINAL LANDSCAPING COMPLETE.

City of Bellevue

STORM AND SURFACE WATER UTILITY

TITLE

PERVIOUS PAVEMENT SIDEWALK

JANUARY 2014

NO SCALE

NO. NDP–14

INTERCEPTOR INFILTRATION TRENCH

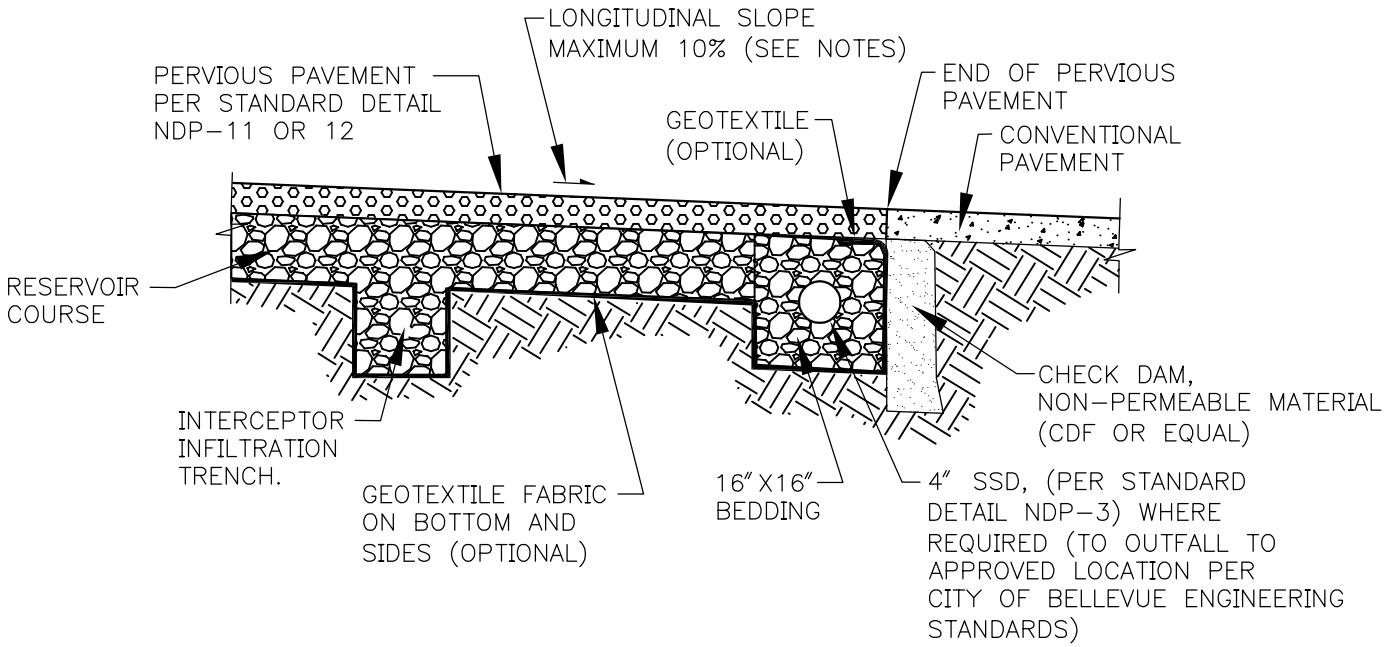

CHECK DAM

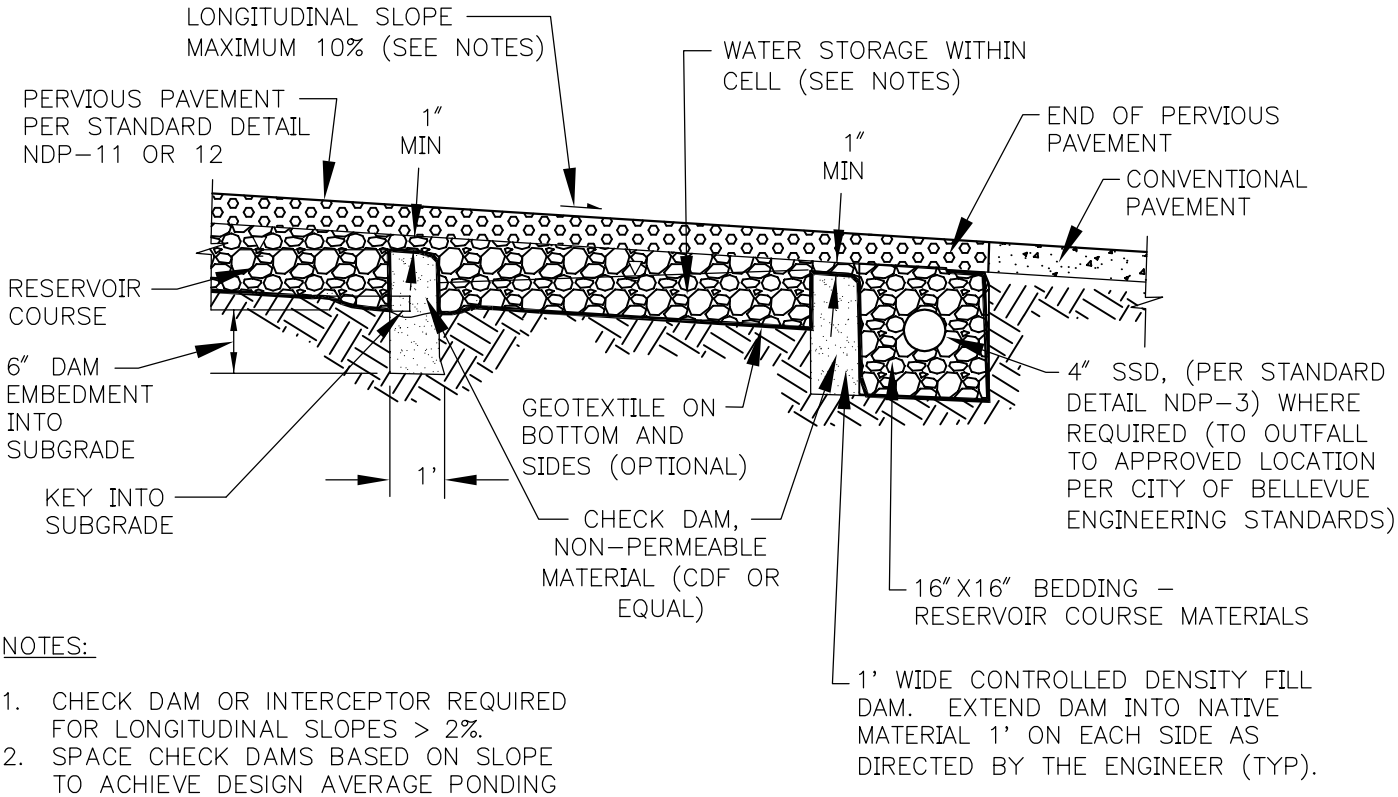

NOTES:

1. CHECK DAM OR INTERCEPTOR REQUIRED FOR LONGITUDINAL SLOPES > 2%.
2. SPACE CHECK DAMS BASED ON SLOPE TO ACHIEVE DESIGN AVERAGE PONDING DEPTH BEFORE OVERTOPPING DAM.
3. CALCULATE STORAGE VOLUME BETWEEN CHECK DAMS BASED ON CHECK DAM HEIGHT AND SLOPE FOR MODELING.
4. LONGITUDINAL SLOPE MAXIMUM VARIES WITH WEARING COURSE MATERIAL PER STANDARD DETAILS NDP-11 AND NDP-12.

City of Bellevue

STORM AND SURFACE WATER UTILITY

TITLE

CHECK DAM AND INTERCEPTOR FOR PERVIOUS PAVEMENT ON SLOPES

NO. NDP-15

JANUARY 2014

NO SCALE

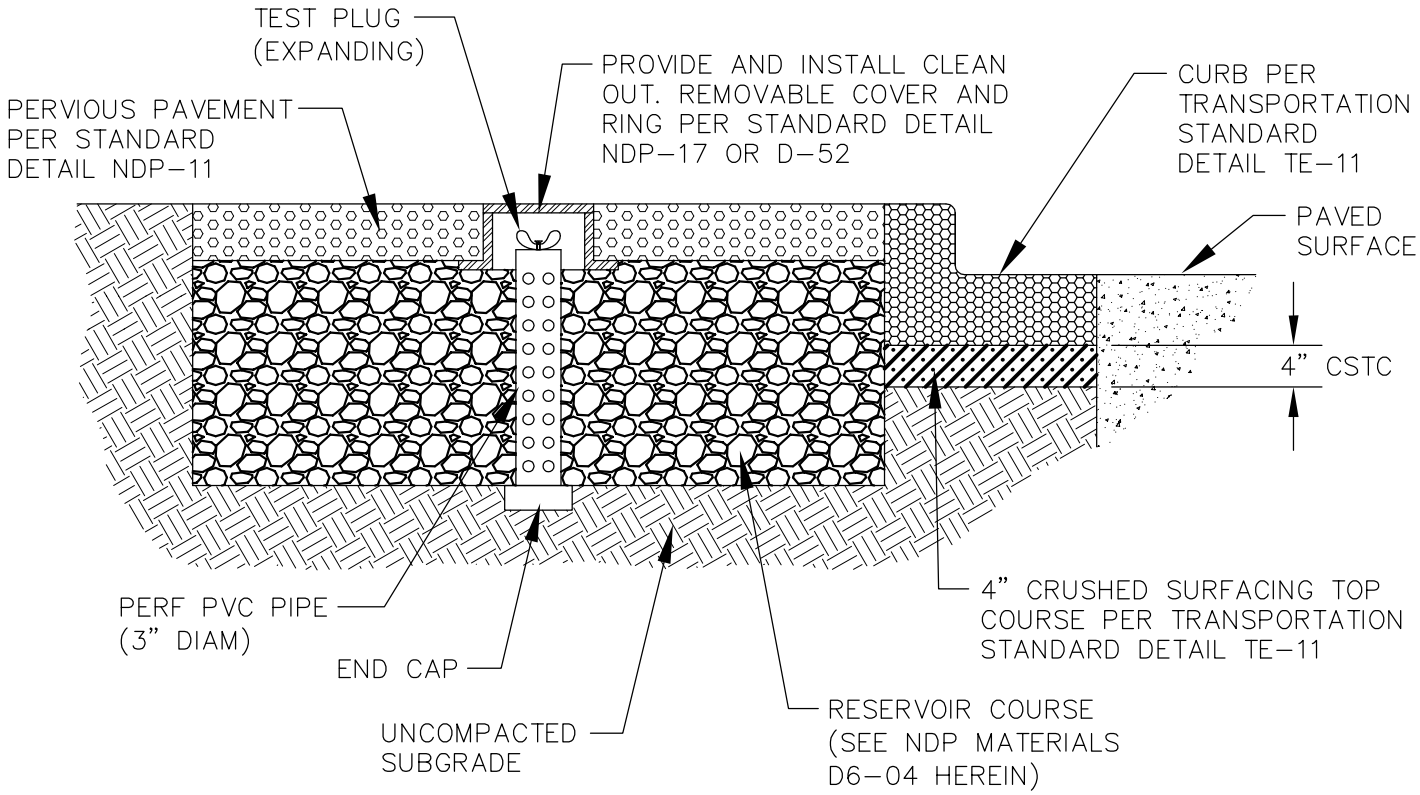

NOTES:

READ WATER TABLE DEPTH:

1. MEASURE DISTANCE FROM TOP EDGE OF RISER TO WATER SURFACE INSIDE OF PIPE.
2. MEASURE DISTANCE FROM TOP EDGE OF RISER TO FINISH GRADE OF PERVIOUS PAVEMENT.
3. ADD 1 AND 2 FOR DEPTH TO WATER TABLE.
4. NOTE IF B HAS CHANGED FROM PREVIOUS OBSERVATIONS (IF SHIFTING).

City of Bellevue

STORM AND SURFACE WATER UTILITY

TITLE

OBSERVATION PORT FOR PERVIOUS PAVEMENT

NO. NDP-16

JANUARY 2014

NO SCALE

A.) OUTSIDE OF R.O.W. OR EASEMENT

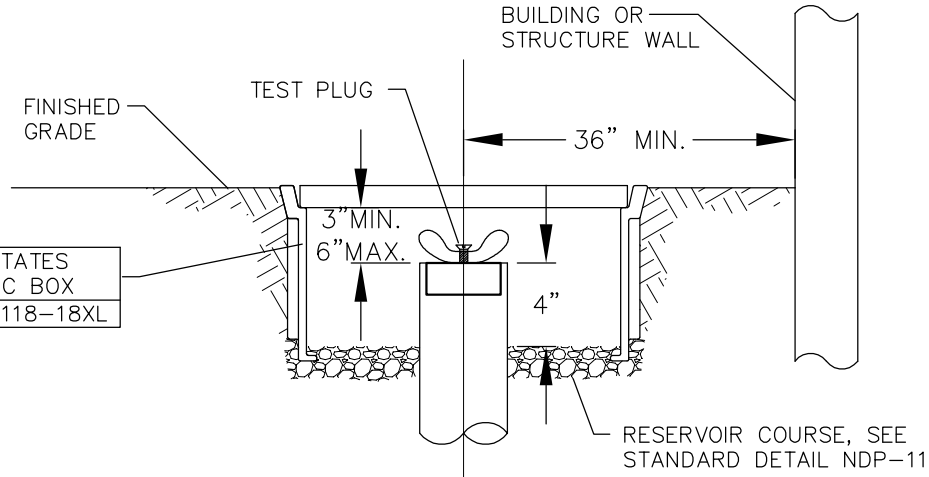

OBS PORT PIPE DIAMETER	MID-STATES PLASTIC BOX
3"	MSBCF-1118-18XL

B.) RIGHT-OF-WAY OR EASEMENT

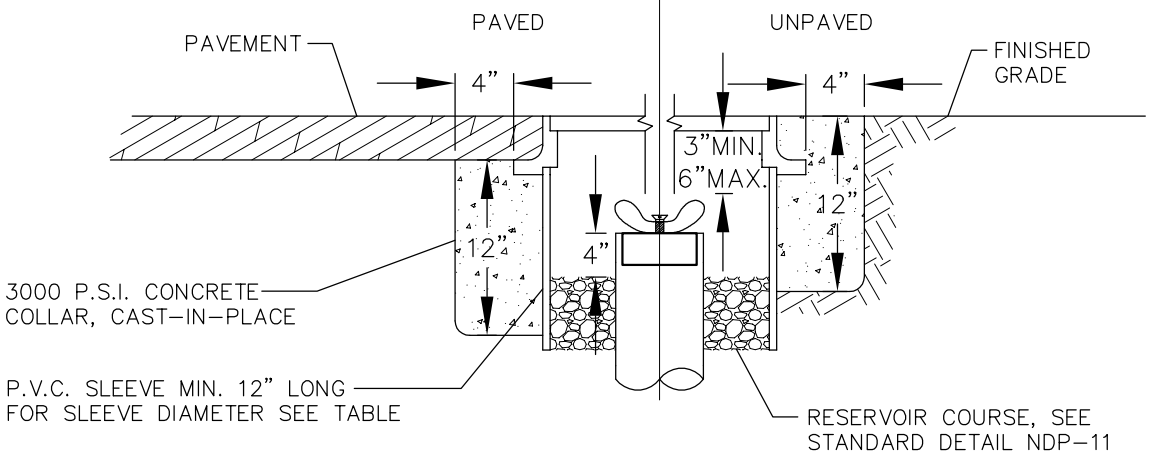

OBS PORT PIPE DIAMETER	RING AND COVER DIAMETER	P.V.C SLEEVE DIAMETER
3"	12"	12"

NOTES:

1. BOLT-LOCKING CAST IRON RING AND COVER SHALL BE USED IN RIGHT-OF-WAY AND EASEMENTS AND MUST BE RATED HS-20 IF USED IN TRAFFIC AREAS. SEE TABLE FOR SIZES.
2. MID-STATES PLASTIC BOX OR EQUAL MAY BE USED IF OBSERVATION PORT IS OUTSIDE OF RIGHT-OF-WAY OR EASEMENT. SEE TABLE FOR SIZES. THE COVER FOR THE PLASTIC BOX SHALL BE DUCTILE IRON AND READ "STORM" OR BE BLANK (NO LABEL).
3. CAST IRON COVER SHALL READ "STORM, DO NOT BURY", OR EQUIVALENT.
4. LOCKING BOLTS SHALL BE 5/8"-11 N.C. 304 STAINLESS STEEL SOCKET (ALLEN) HEAD, 2" LONG.
5. 14" BOLT-LOCKING CAST IRON COVER SHALL BE EQUAL TO INLAND FOUNDRY NUMBER 209, OR 210. FOR TRAFFIC AREAS, SEE STANDARD DETAIL D-52.
6. SPECIAL "DECORATIVE" CASTING MAY BE USED IF PREAPPROVED BY CITY OF BELLEVUE.

JANUARY 2014 NO SCALE

City of Bellevue

STORM AND SURFACE WATER UTILITY

TITLE

OBSERVATION PORT COVERS FOR PERVIOUS PAVEMENT

NO. NDP-17

ROOF RECYCLING COLLECTION SYSTEM

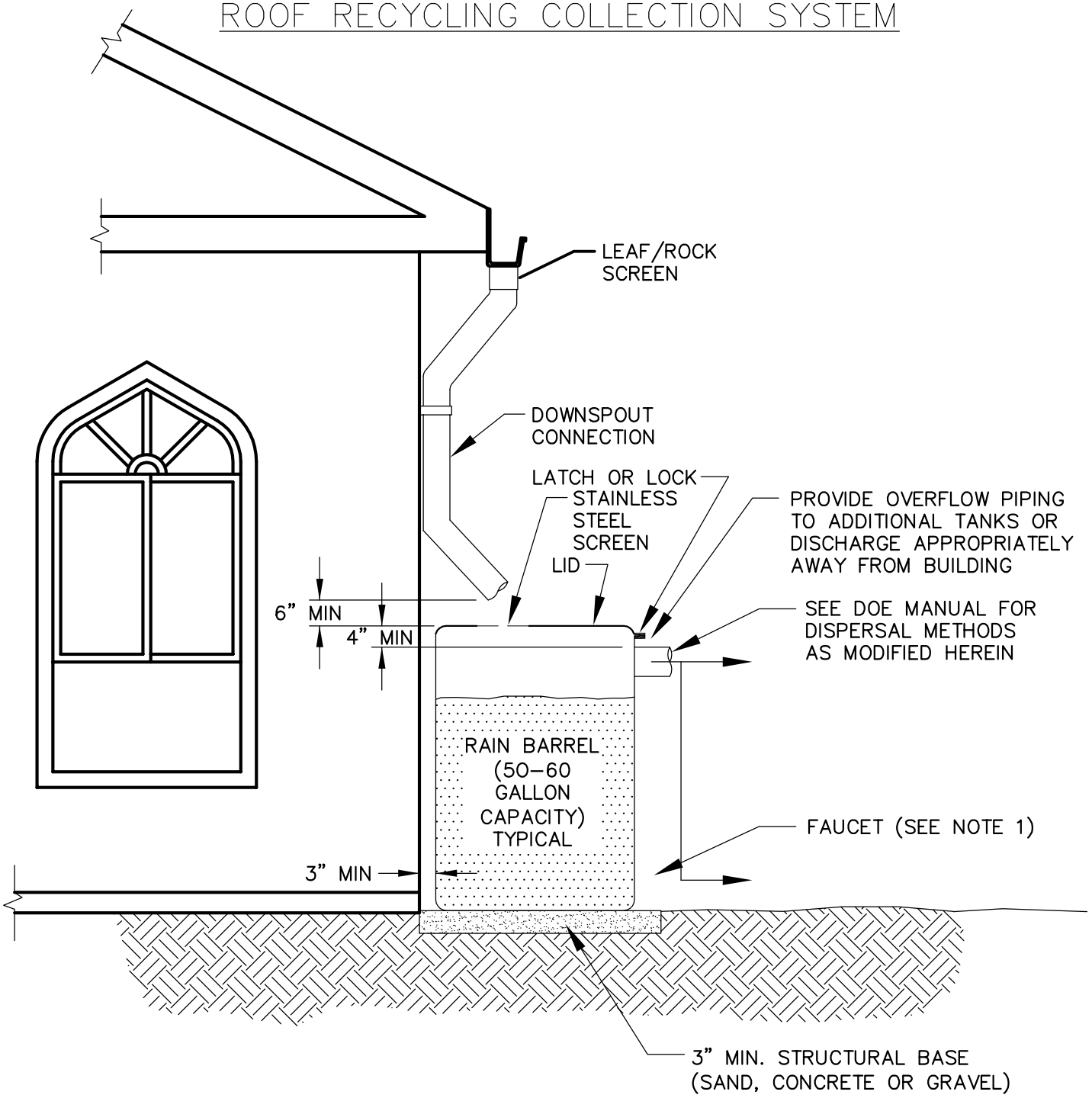

NOTES:

1. HOSE BIB FOR ATTACHING GARDEN HOSE FOR HAND WATERING.
2. SEE NDP CHAPTER D6–04 HEREIN FOR ALL MATERIALS.

City of Bellevue

STORM AND SURFACE WATER UTILITY

TITLE

RAIN RECYCLING SYSTEM – RAIN BARREL

NO. NDP–18

JANUARY 2014

NO SCALE

ROOF RECYCLING COLLECTION SYSTEM

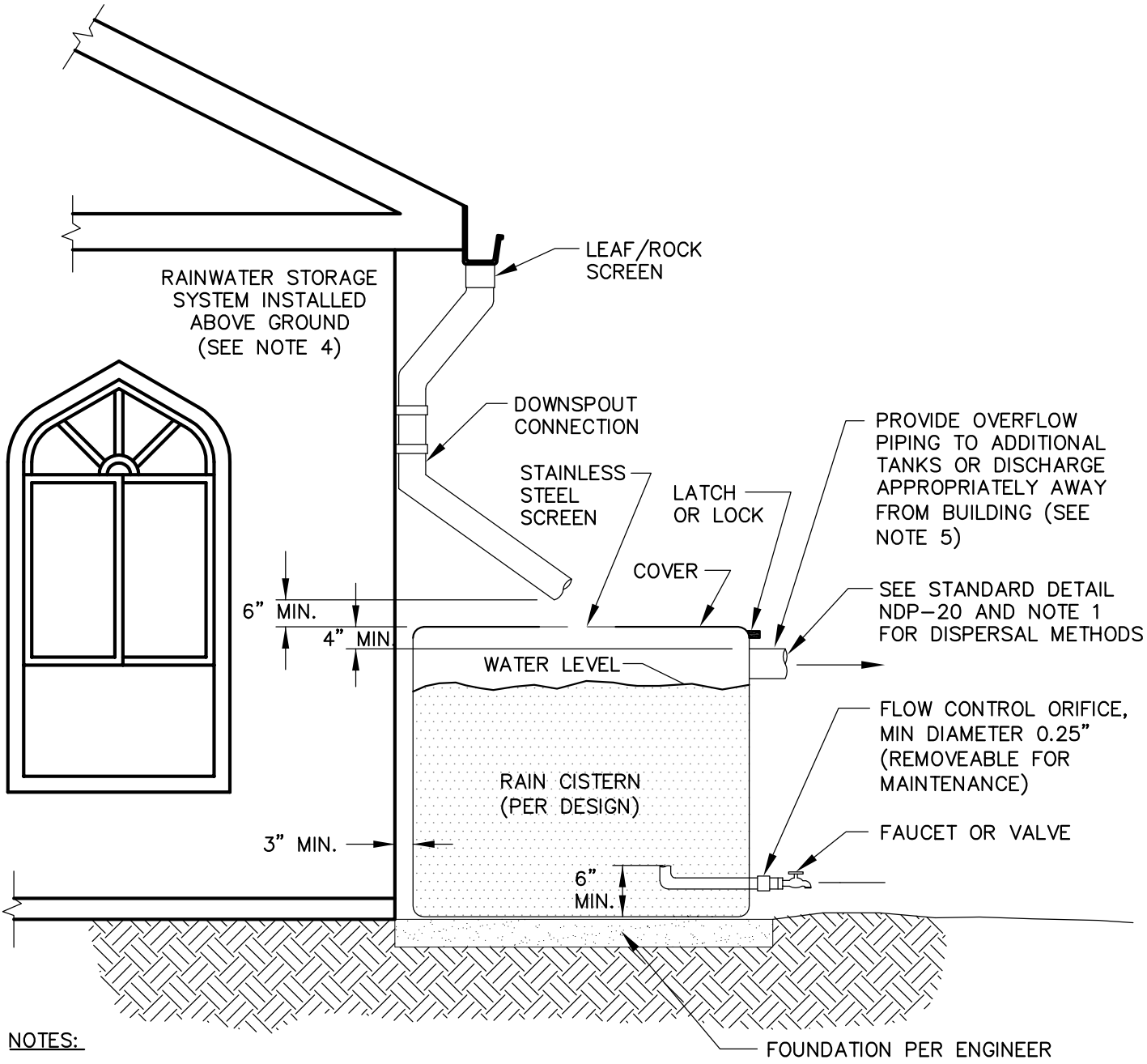

NOTES:

1. SEE DOE MANUAL, CHAPTER 3, VOLUME III AND CHAPTER 5, VOLUME V FOR DISPERSION OPTIONS, OR CONNECT TO IRRIGATION SYSTEM WITH PROPER BACKFLOW PROTECTION.
2. SEE NDP CHAPTER D6-04 HEREIN FOR MATERIALS AND QUALIFIED PRODUCTS.
3. ELECTRICAL PERMIT REQUIRED IF WATER PUMP IS TO BE INSTALLED.
4. STORAGE SYSTEM INSTALLATION UNDERGROUND WITH ENGINEERED DESIGN ONLY.
5. REDUNDANT OVERFLOW SYSTEMS ARE RECOMMENDED.

City of Bellevue

STORM AND SURFACE WATER UTILITY

TITLE

RAIN RECYCLING SYSTEM – CISTERN

NO. NDP-19

JANUARY 2014

NO SCALE

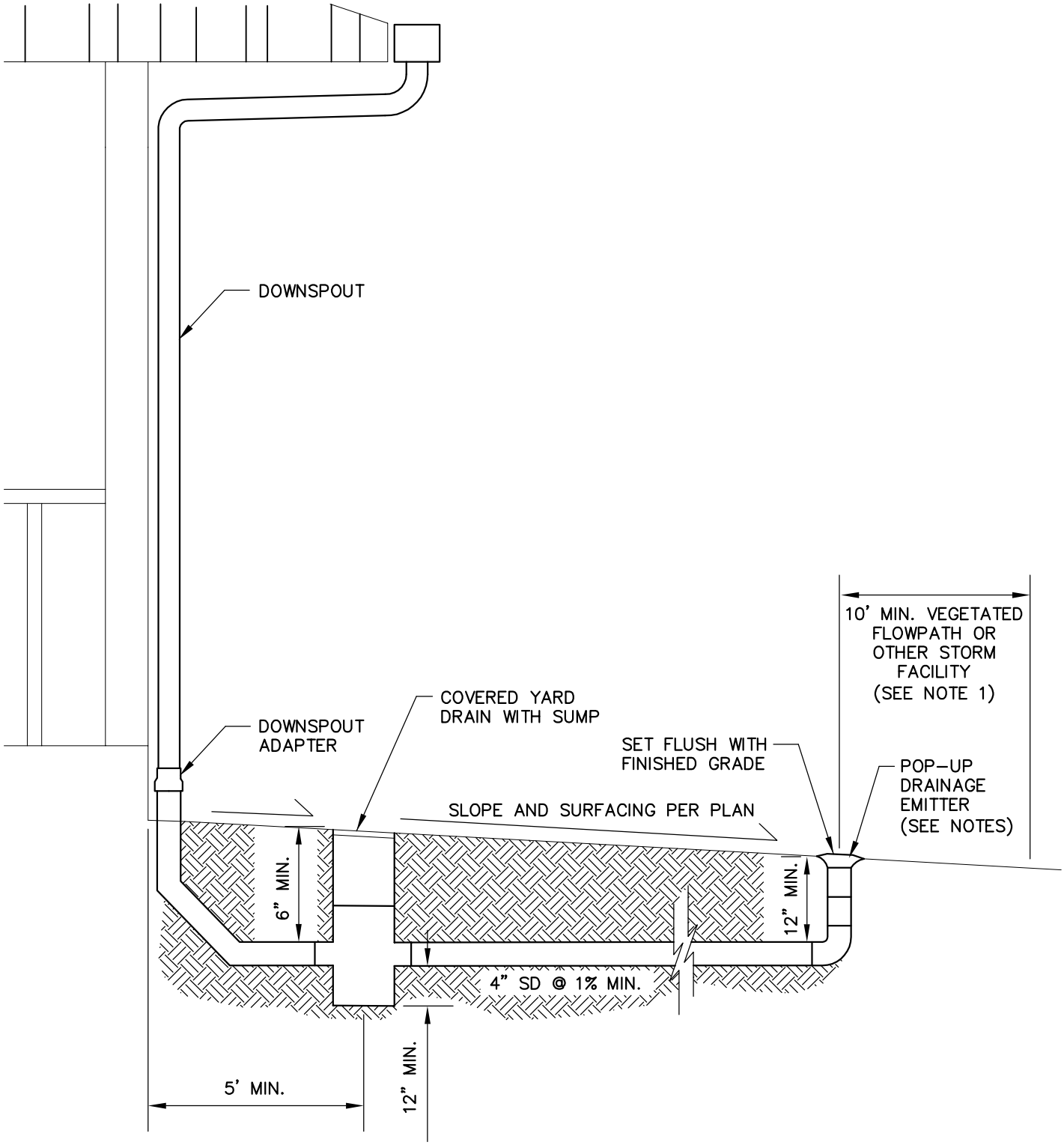

NOTES:

1. DESIGN EMITTER TO DISCHARGE ONTO VEGETATED AREA WITH AMENDED SOILS OR OTHER SUITABLE LANDSCAPED AREA, INFILTRATION OR DRAINAGE SYSTEM PER THE DOE MANUAL AS MODIFIED HEREIN.
2. DO NOT CONNECT FOOTING DRAIN.
3. SEE NDP CHAPTER D6-04 HEREIN FOR ALL MATERIALS.

City of Bellevue

STORM AND SURFACE WATER UTILITY

TITLE

POP-UP DRAINAGE EMITTER

NO. NDP-20

JANUARY 2014

NO SCALE

REVERSE SLOPE SIDEWALK

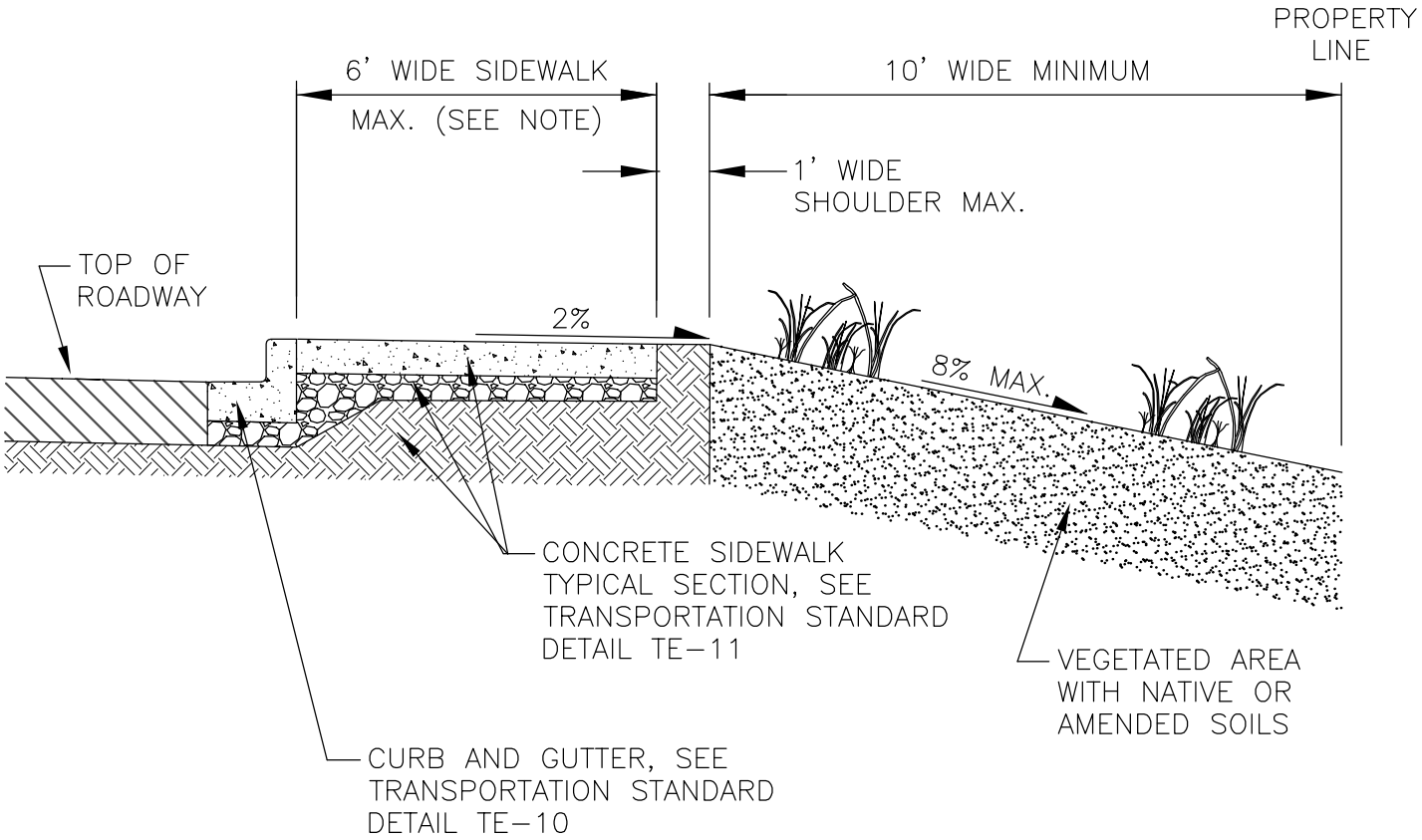

NOTE
LONGITUDINAL SLOPE SHALL BE 10% MAXIMUM

City of Bellevue

STORM AND SURFACE WATER UTILITY

TITLE

REVERSE SLOPE SIDEWALK

NO. NDP-21

JANUARY 2014

NO SCALE

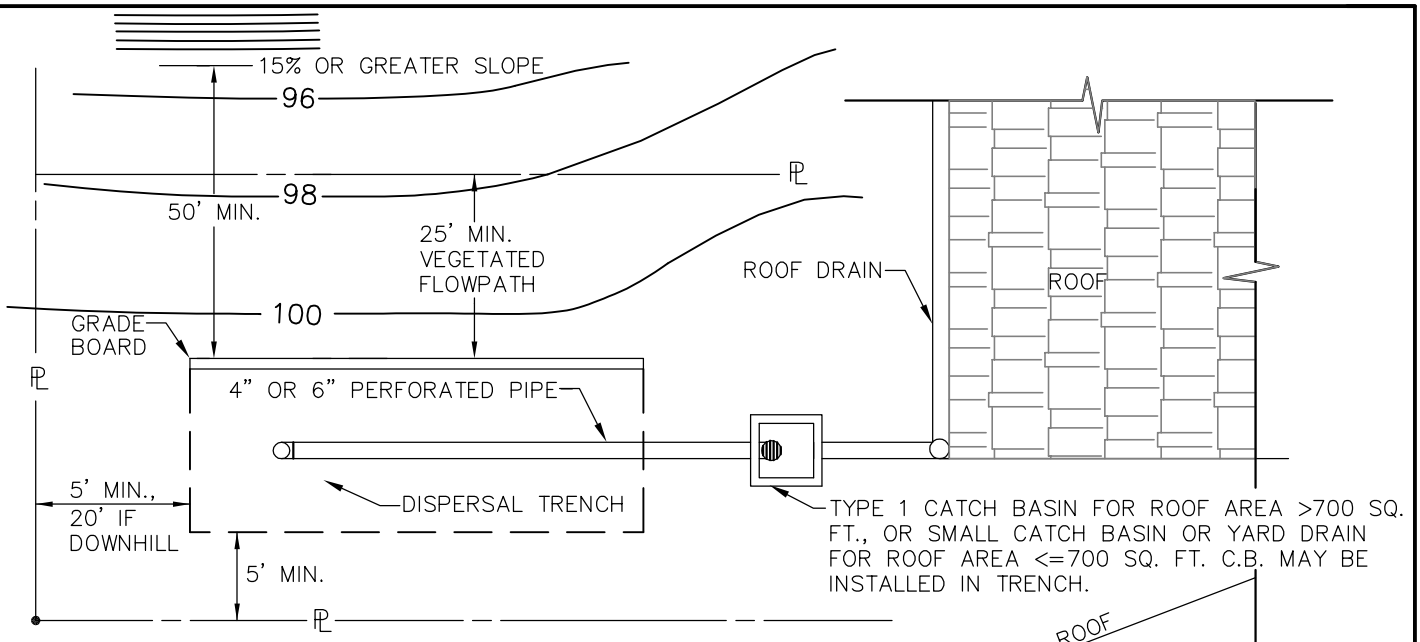

PLAN VIEW

NO SCALE

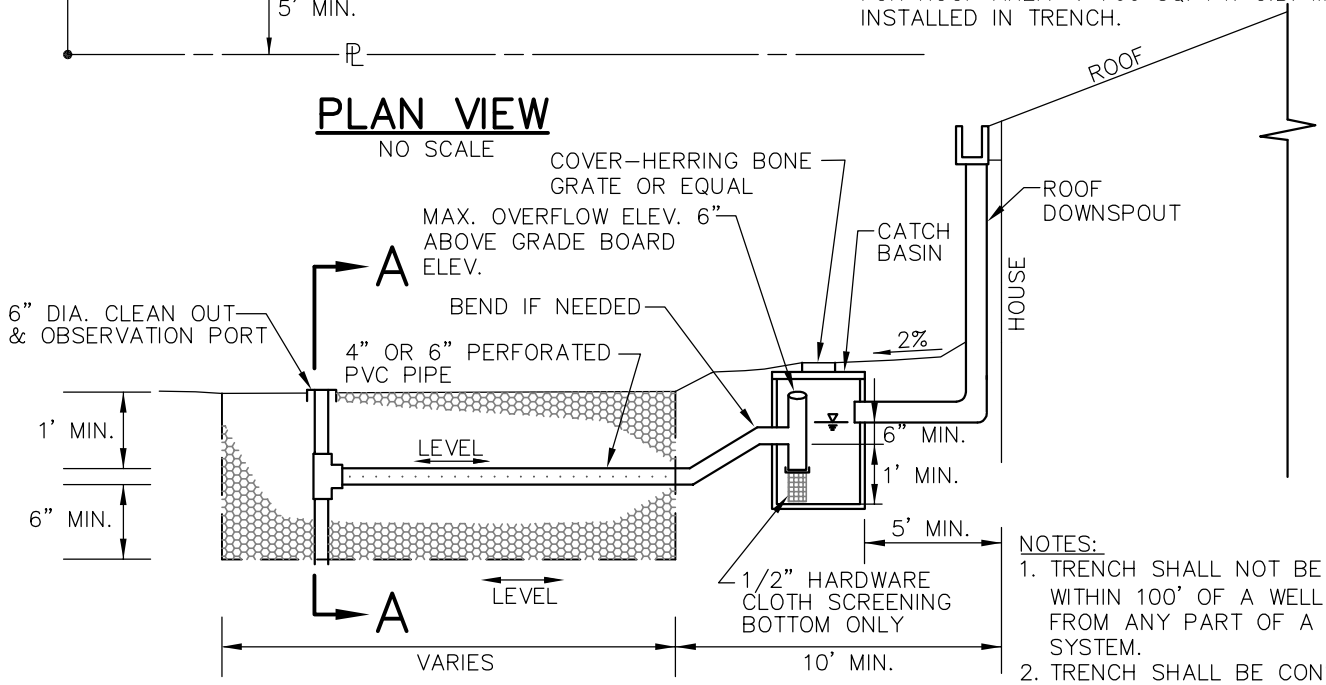

PROFILE VIEW

NO SCALE

NOTES:

1. TRENCH SHALL NOT BE LOCATED WITHIN 100' OF A WELL OR 30' FROM ANY PART OF A SEPTIC SYSTEM.
2. TRENCH SHALL BE CONSTRUCTED SO AS TO PREVENT POINT DISCHARGE AND/OR EROSION.
3. IF NO GRAVITY ACCESS TO DOWNSTREAM CONVEYANCE FACILITY AND FLOW PATH REQUIREMENT CAN NOT BE MET, MUST BE PUMPED TO APPROVED DISCHARGE.
4. GRADE BOARD AND SUPPORT POST UNTREATED, CEDAR OR RECYCLED PLASTIC. SPACE SUPPORT POSTS EVERY 10' MIN. TO KEEP GRADE BOARD LEVEL.
5. LEAVE ROCK PERMANENTLY EXPOSED. DO NOT FILL.

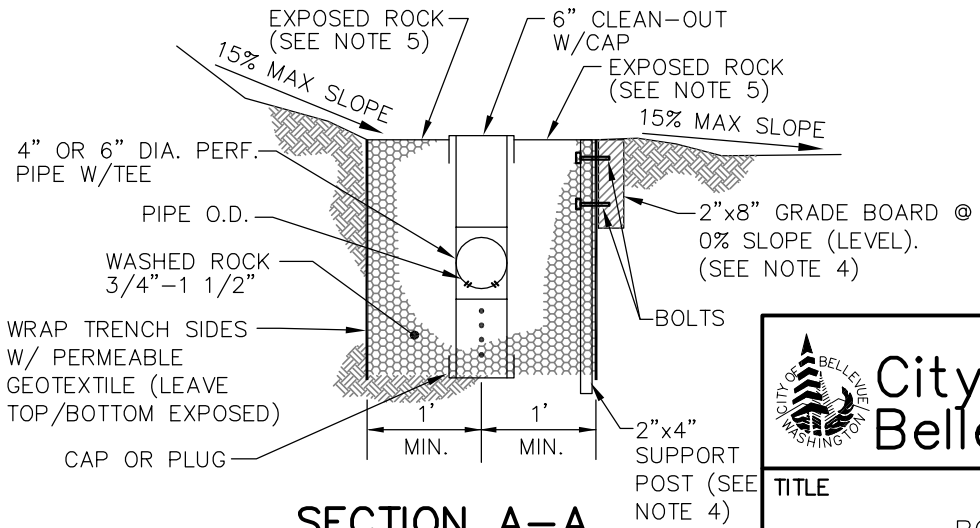

SECTION A-A

NO SCALE

City of Bellevue

STORM AND SURFACE WATER UTILITY

TITLE

ROOF DOWNSPOUT DISPERSION TRENCH

NO. NDP-22

JANUARY 2014

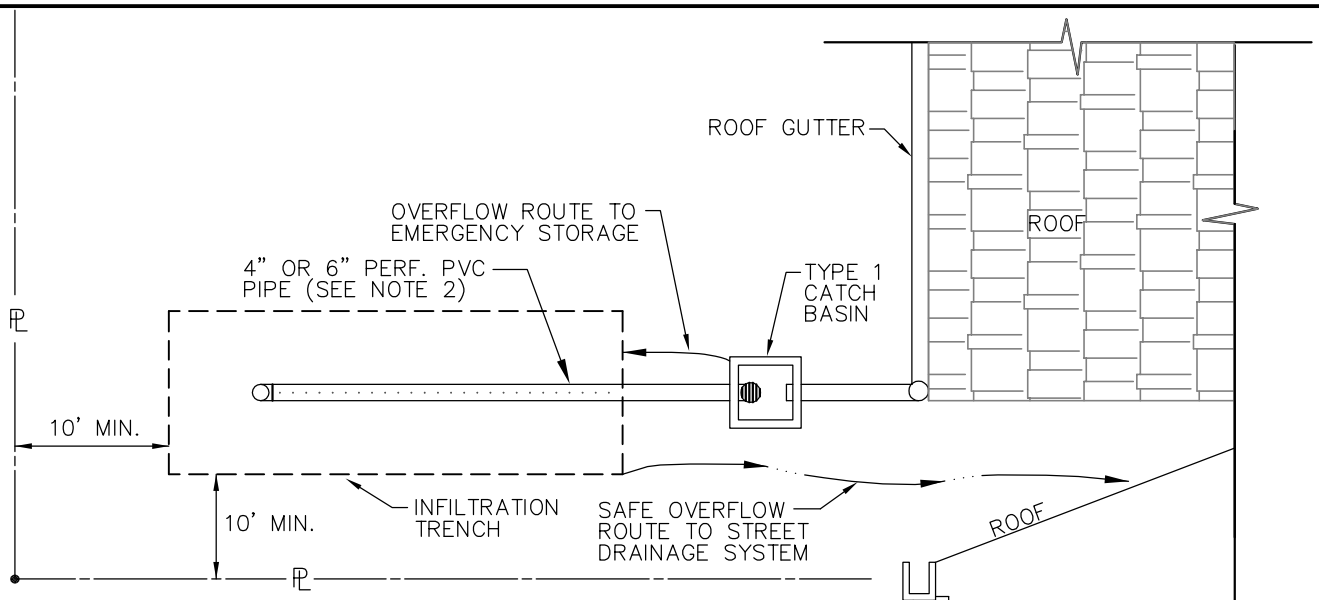

PLAN VIEW

NO SCALE

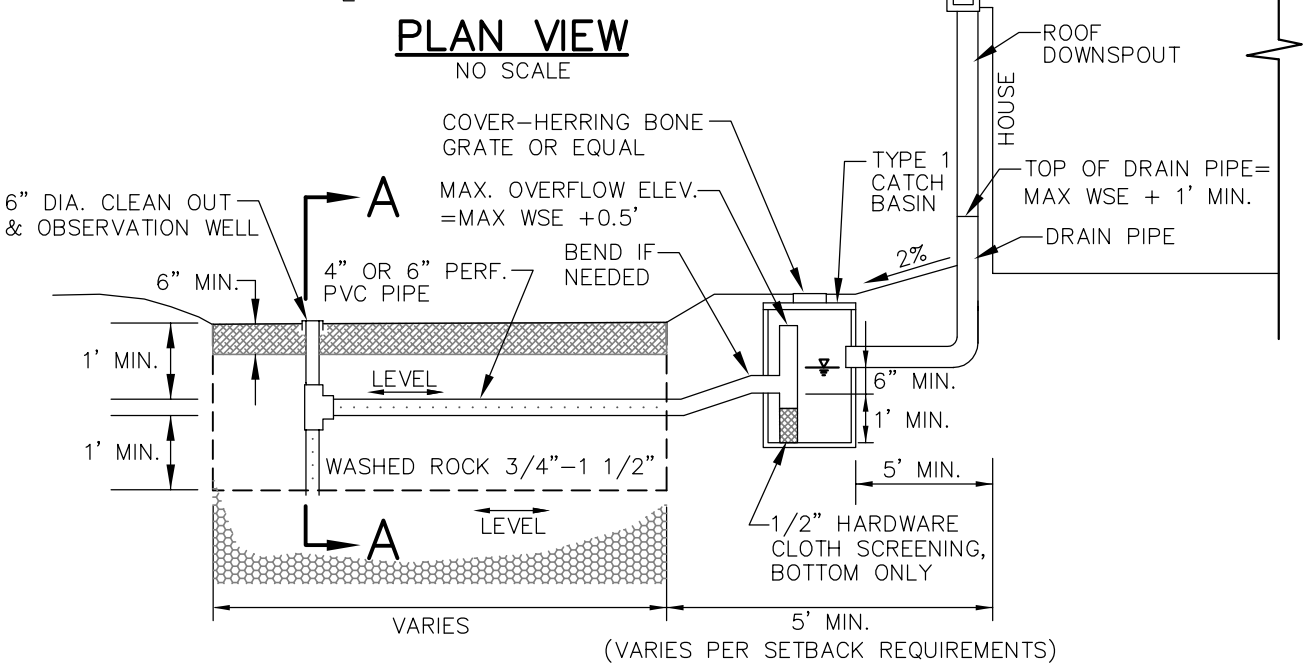

PROFILE VIEW

NO SCALE

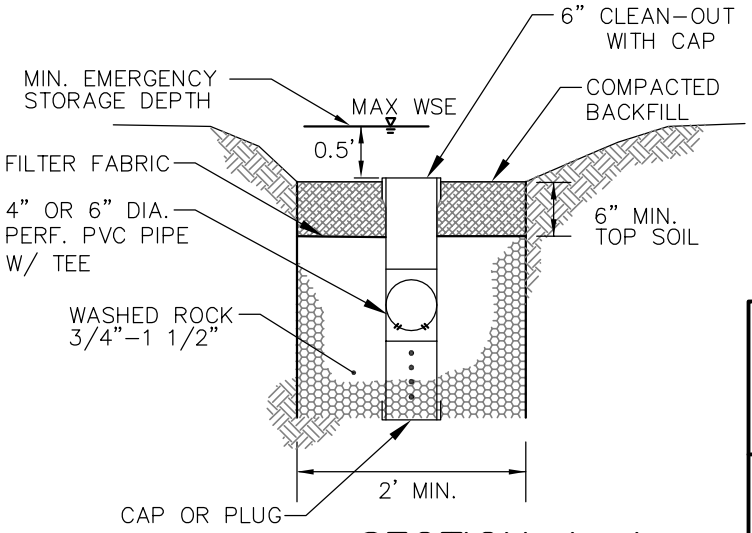

SECTION A-A

NO SCALE

NOTES:

1. TRENCH SHALL NOT BE LOCATED WITHIN 100' OF A WELL OR 30' FROM ANY PART OF A SEPTIC SYSTEM.
2. CENTER PERF. PIPE HORIZONTALLY IN TRENCH.

City of Bellevue

STORM AND SURFACE WATER UTILITY

TITLE

ROOF DOWNSPOUT INFILTRATION TRENCH

NO. NDP-23

JANUARY 2014

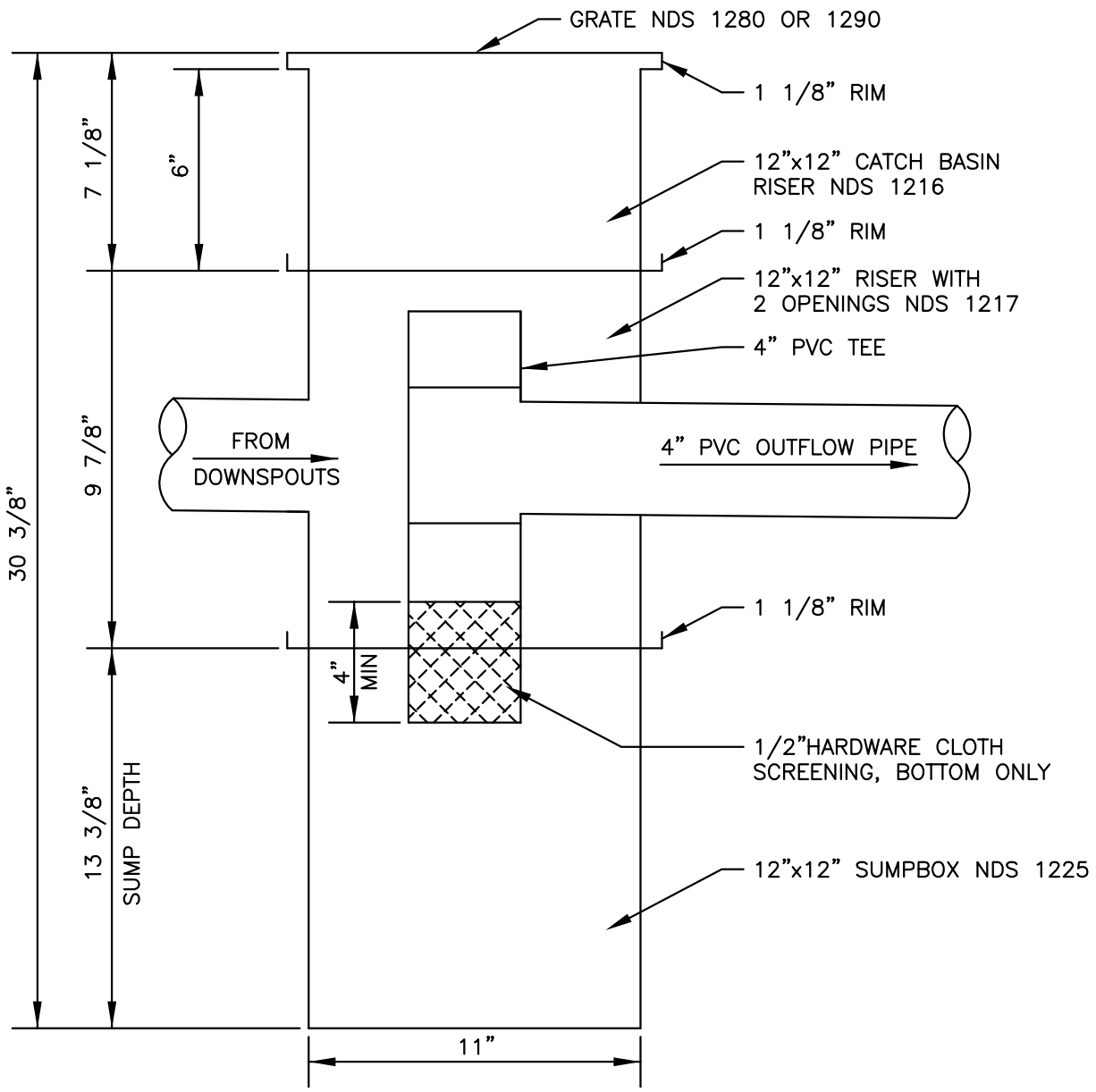

NOTES:

1. THIS DETAIL USES NDS PRODUCTS TO CREATE A LIGHT WEIGHT YARD CATCH BASIN FOR USE IN NON–ROADWAY AREAS. OTHER PRODUCTS MAY BE ACCEPTABLE AS APPROVED BY BELLEVUE UTILITIES.
2. SUMP DEPTH MUST BE A MINIMUM OF 2x DIAMETER OF INLET PIPE.
3. PVC SDR35 OR EQUAL FOR TEE AND PIPE.
4. GRATE SHALL BE ATRIUM STYLE.
5. A SUMP BOX WITH ONE OPENING MAY BE SUBSTITUTED INSTEAD OF TWO OPENINGS.
6. A MINIMUM FREEBOARD OF 3" SHALL BE PROVIDED BETWEEN THE TOP OF THE TEE AND THE GRATE.

City of Bellevue

STORM AND SURFACE WATER UTILITY

TITLE

RESIDENTIAL YARD CATCH BASIN

JANUARY 2014

NO SCALE

NO. NDP–24

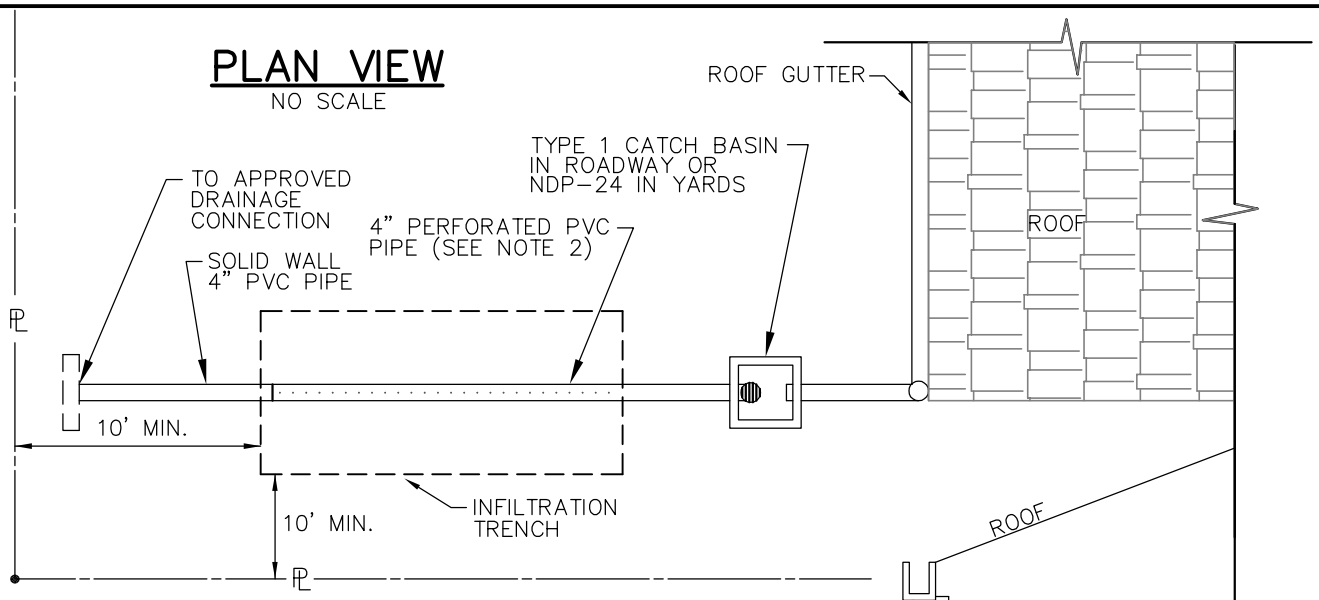

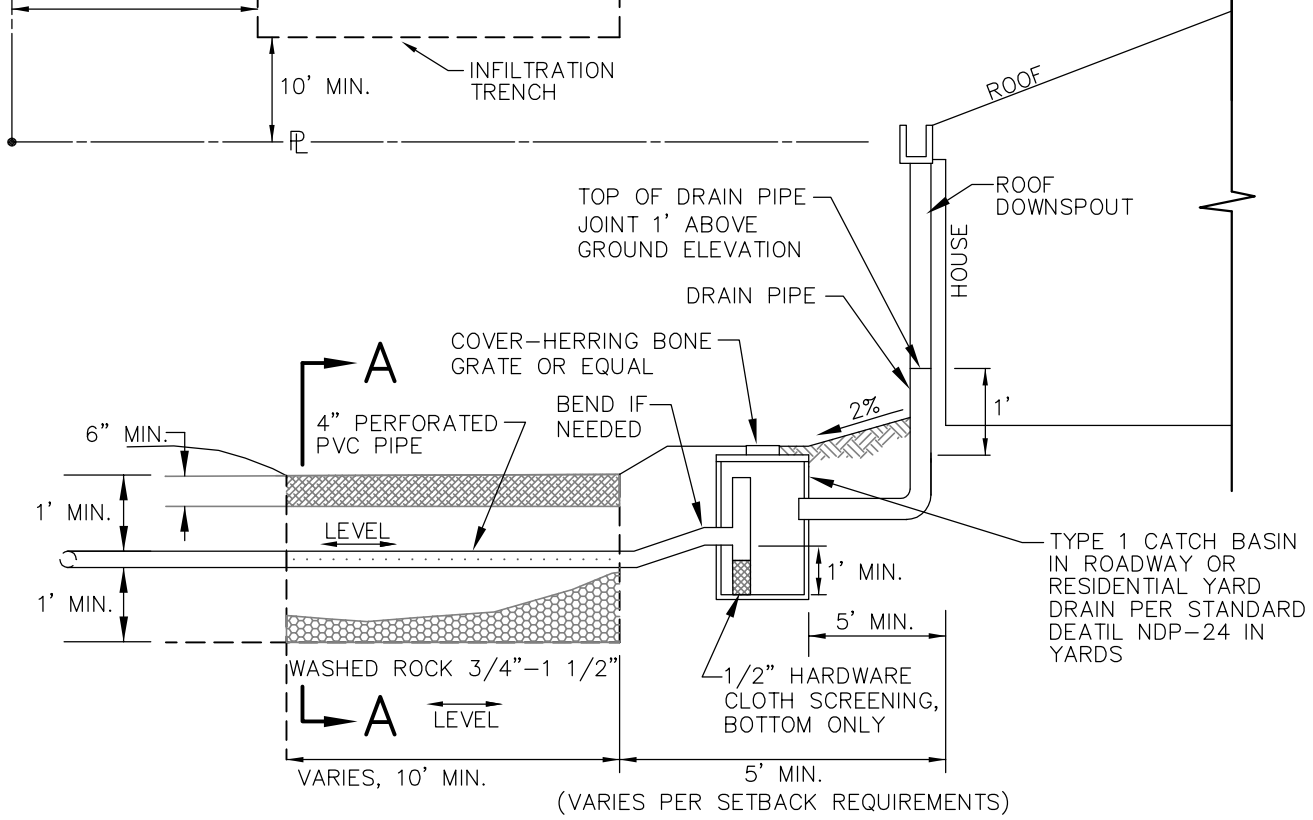

PROFILE VIEW
NO SCALE

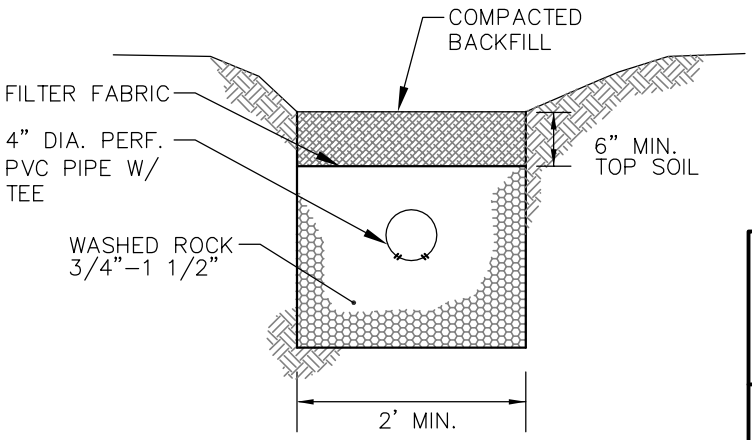

SECTION A-A
NO SCALE

NOTES:

1. TRENCH SHALL NOT BE LOCATED WITHIN 100' OF A WELL OR 30' FROM ANY PART OF A SEPTIC SYSTEM.
2. CENTER PERF. PIPE HORIZONTALLY IN TRENCH.
3. NOT TO BE USED IN CRITICAL AREA BUFFERS OR STEEP SLOPES > 25%.

City of Bellevue

STORM AND SURFACE WATER UTILITY

TITLE

RESIDENTIAL ROOF DOWNSPOUT PERFORATED PIPE CONNECTION

NO. NDP-25

JANUARY 2014

APPENDIX D-2

DRAFTING STANDARDS

Also available in AutoCAD format at:

http://www.bellevuewa.gov/utilities_maps_forms.htm

WATER SYMBOLS

SYMBOL EXIST.	SYMBOL PROP.	DESCRIPTION	BLOCK	LAYER
		ADAPTER, FL. x M.J.	WAFM/SAME	WA–FITT–3333–SYM
		BENDS:		
		90 DEGREE BEND, FL.	W90F/SAME	WA–FITT–3333–SYM
		45 DEGREE BEND, FL.	W45F/SAME	WA–FITT–3333–SYM
		22.5 DEGREE BEND, FL.	W22F/SAME	WA–FITT–3333–SYM
		11.25 DEGREE BEND, FL.	W11F/SAME	WA–FITT–3333–SYM
		90 DEGREE BEND, M.J.	W90M/SAME	WA–FITT–3333–SYM
		45 DEGREE BEND, M.J.	W45M/SAME	WA–FITT–3333–SYM
		22.5 DEGREE BEND, M.J.	W22M/SAME	WA–FITT–3333–SYM
		11.25 DEGREE BEND, M.J.	W11M/SAME	WA–FITT–3333–SYM
		VERTICAL BEND, FL.	WVTF/SAME	WA–FITT–3333–SYM
		VERTICAL BEND, M.J.	WVTM/SAME	WA–FITT–3333–SYM
		REDUCERS:		
		REDUCER, FL.	WRF/WRFP	WA–FITT–3333–SYM
		REDUCER, M.J.	WRM/WRMP	WA–FITT–3333–SYM
		REDUCER, M.J. x FL.	WRMF/WRMFP	WA–FITT–3333–SYM
		REDUCER, M.J. x P.E.	WRMB/WRMBP	WA–FITT–3333–SYM
		REDUCER, P.E. x M.J./FL. x M.J.	WRBM/WRBMP	WA–FITT–3333–SYM
		TEES:		
		TAPPING TEE & VALVE, FL. x M.J.	WTTM/WTTMP	WA–VALV–3333–SYM
		TEE, FL.	WTF/SAME	WA–FITT–3333–SYM
		TEE, M.J.	WTM/SAME	WA–FITT–3333–SYM
		TEE, M.J. x FL.	WTMF/SAME	WA–FITT–3333–SYM
		VALVES:		
		BUTTERFLY VALVE, FL.	WBFV/WBFVP	WA–VALV–3333–SYM
		BUTTERFLY VALVE, FL. x M.J.	WBVFM/WBVFMP	WA–VALV–3333–SYM
		BUTTERFLY VALVE, M.J.	WBVM/WBVMP	WA–VALV–3333–SYM
		GATE VALVE, FL.	WGV/WGVP	WA–VALV–3333–SYM
			SAME – INDICATES USE SAME BLOCK FOR PROPOSED.	3333–USE EXST/PRO

American Public Works Association Washington State Chapter

City of Bellevue

WATER SYMBOLS

SYMBOL EXIST.	SYMBOL PROP.	DESCRIPTION	(ABBR)	BLOCK	LAYER
		GATE VALVE, FL. x M.J.		WGVFM/WGVFMP	WA–VALV–3333–SYM
		GATE VALVE, M.J.		WGVM/WGVMP	WA–VALV–3333–SYM
		AIR RELIEF VALVE	(AIR)	WARV/WARVP	WA–VALV–3333–SYM
		BLOW–OFF VALVE	(BO)	WBOV/WBOVP	WA–VALV–3333–SYM
		CHECK VALVE	(CK)	WCKV/WCKVP	WA–VALV–3333–SYM
		PLUG VALVE	(PV)	WPV/WPVP	WA–VALV–3333–SYM
		CAP/PLUG		WCAP	WA–FITT–3333–SYM
		COUPLING	(CPL)	WCOUP/WCOUPP	WA–FITT–3333–SYM
		GUARD POST	(GP)	WGP/WGPP	WA–FITT–3333–SYM
		REDUCER	(RED)	WRED/WREDP	WA–FITT–3333–SYM
		THRUST BLOCK	(TB)	WTB/WTBP	WA–FITT–3333–SYM
		WATER METER	(WM)	WMET/WMETP	WA–METR–3333–SYM
		FIRE HYDRANTS:			
		2–PORT	(FH)	WFH2/WFH2P	WA–FHYD–3333–SYM
		3–PORT	(FH)	WFH3/WFH3P	WA–FHYD–3333–SYM
		JOINTS:			
		FLANGE/BLIND FL	(FL)/(BL FL)	WFL	WA–FITT–3333–SYM
		MECHANICAL	(MJ)	WMJ	WA–FITT–3333–SYM
		PUSH–ON/HUB		WHUB	WA–FITT–3333–SYM
		THREAD	(THD)	WTH	WA–FITT–3333–SYM

3333 – USE EXST/PROP

SANITARY/STORM SEWER SYMBOLS

SYMBOL EXIST.	SYMBOL PROP.	DESCRIPTION	(ABBR)	BLOCK	LAYER
		SAN. SEWER CLEAN OUT	(CO)	SSCO/SSCOP	SS–STCR–3333–SYM
		SAN. SEWER MANHOLE	(SSMH)	SSMH/SSMHP	SS–STCR–3333–SYM
		STORM DRAIN CATCH BASIN	(CB)	SDCB/SDCBP	SD–STCR–3333–SYM
		STORM DRAIN CULVERT	(CULV)	SDC/SDCP	SD–GLIN–3333–SYM
		STORM DRAIN MANHOLE	(SDMH)	SDMH/SDMHP	SD–STCR–3333–S

3333 – USE EXST/PR

American Public Works Association Washington State Chapter

City of Bellevue

SURVEY SYMBOLS

SYMBOL THEOR./ EXIST.	SYMBOL FOUND/ PROP.	DESCRIPTION	(ABBR)	BLOCK	LAYER
		ANGLE POINT	(AP)	SAP/SAPP	SV–CTRL–3333–SYM
		BENCH MARK	(BM)	SBM/SBMP	SV–CTRL–3333–SYM
		BLOCK CORNER	(BC)	SBC/SBCP	SV–CTRL–3333–SYM
		IRON PIPE	(IP)	SIP/SIPP	SV–CTRL–3333–SYM
		MONUMENT (IN CASE)	(MIC)	SMIC/SMICP	SV–CTRL–3333–SYM
		MONUMENT (SURFACE)	(MON)	SMON/SMONP	SV–CTRL–3333–SYM
		OWNERSHIP TIE	(OT)	SOT	SV–LOTN–3333–SYM
		SECTION DATA:			
		SECTION CENTER		SSCT	SV–SECT–3333–SYM
		SECTION CORNER		SSC/SSCP	SV–SECT–3333–SYM
		QUARTER CORNER		SQC/SQCP	SV–QSCT–3333–SYM
		SIXTEENTH CORNER		SSXC/SSXCP	SV–16ST–3333–SYM
		CLOSING CORNER		SCC/SCCP	SV–222A–3333–SYM
MC	MC	MEANDER CORNER	(MC)	SMC/SMCP	SV–222A–3333–SYM
WC	WC	WITNESS CORNER	(WC)	SWC/SWCP	SV–SECT–3333–SYM
		SOIL BORING	(SB)	SSB/SSBP	SV–SOIL–3333–SYM
		SPOT ELEVATION	(SE)	SSE/SSEP	SV–CTRL–3333–SYM
		TAX LOT / PARCEL NUMBER		STLN	SV–222B–3333–SYM

222A – USE RANG/SECT/TWNS
222B – USE PRCL/LOTN
3333 – USE EXST/PROP OR FOUN/THEO

DATUM

BLOCK: SNA
LAYER: SV–NORA–3333–SYM

BLOCK: SDAT
LAYER: SV–DATM–3333–SYM

American Public Works Association Washington State Chapter

City of Bellevue

SURFACE FEATURES/LANDSCAPING

SYMBOL EXIST.	SYMBOL PROP.	DESCRIPTION	BLOCK	LAYER
BUS	BUS	BUS STOP	SFBS/SFBSP	SF-BUSS-3333-SYM
		EMBANKMENT	SFB/SFBP	SF-EMBT-3333-SYM
		MAIL BOX	SFMB/SFMBP	SF-MAIL-3333-SYM
		RIP RAP	SFRR/SFRRP	SF-RIPR-3333-SYM
		ROCKERY	SFR/SFRP	SF-ROCK-3333-SYM
		SHRUB	SFS/SFSP	SF-VEGE-3333-SYM
		SIGN	SFSN/SFSNP	SF-SIGN-3333-SYM
		TREE (Conifer)	SFC/SFCP	SF-VEGE-3333-SYM
		TREE (Deciduous)	SFD/SFDP	SF-VEGE-3333-SYM
		YARD LIGHT	SFL/SFLP	SF-LITE-3333-SYM

3333 – USE EXST/PROP

American Public Works Association Washington State Chapter

City of Bellevue

SIGNALIZATION SYMBOLS

SYMBOL EXIST.	SYMBOL PROP.	DESCRIPTION	BLOCK	LAYER
		AERIAL DISCONNECT	TAD/TADP	TF-SIGL-3333-SYM
		AERIAL TERMINAL COMPARTMENT	TATC/TATCP	TF-SIGL-3333-SYM
		DETECTORS:		
		DIPOLE DETECTOR	TDD/TDDP	TF-SIGL-3333-SYM
		QUADRAPOLE DETECTOR	TQD/TQDP	TF-SIGL-3333-SYM
		PEDESTRIAN DETECTOR	TPD/TPDP	TF-SIGL-3333-SYM
		EMERGENCY VEHICLE INDICATOR LIGHTS:		
		INDICATOR LIGHTS	TIL/TILP	TF-SIGL-3333-SYM
		OPTICOM SENSOR	TOS/TOSP	TF-SIGL-3333-SYM
		OPTICOM SENSOR W/ INDICATOR LIGHTS	TOSL/TOSLP	TF-SIGL-3333-SYM
		FLASHING WARNING SYSTEM	TFWS/TFWSP	TF-SIGL-3333-SYM
		JUNCTION BOX (TYPE I, II, III)	TJB1/TJB1P TJB2/TJB2P TJB3/TJB3P	TF-SIGL-3333-SYM TF-SIGL-3333-SYM TF-SIGL-3333-SYM
		PEDESTRIAN PUSHBUTTON POST W/ PUSHBUTTON	TPB/TPBP	TF-SIGL-3333-SYM
		PEDESTRIAN SIGNAL HEAD	TPSH/TPSHP	TF-SIGL-3333-SYM
		POLE NOTE	TPN	TF-SIGL-3333-SYM
		R/R CROSSING GATE	TRG/TRGP	TF-SIGL-3333-SYM
		R/R CROSSING SIGNAL	TRC/TRCP	TF-SIGL-3333-SYM

3333-USE EXST/PRO

American Public Works Association Washington State Chapter

City of Bellevue

SIGNALIZATION SYMBOLS

SYMBOL EXIST.	SYMBOL PROP.	DESCRIPTION	BLOCK	LAYER
		SIGNAL CONTROLLER	TSC/TSCP	TF-SIGL-3333-SYM
		SIGNAL LOAD CENTER	TSLC/TSLCP	TF-SIGL-3333-SYM
		STREET LIGHT ASSEMBLY	TSLA/TSLAP	TF-SIGL-3333-SYM
		TRAFFIC SIGNS:		
		BRIDGE	TSB/TSBP	TF-SIGN-3333-SYM
		CANTILEVERED	TSCL/TSCLP	TF-SIGN-3333-SYM
		SINGLE POST	TSS/TSSP	TF-SIGN-3333-SYM
		DOUBLE POST	TSD/TSDP	TF-SIGN-3333-SYM
		TRAFFIC SIGNAL POLE	TPOL/TPOLP	TF-SIGL-3333-SYM
		TRAFFIC SIGNAL POLE W/ LUMINAIRE	TSPL/TSPLP	TF-SIGL-3333-SYM
		TRAFFIC SIGNAL SUPPORT POLE	TSPOL/TSPOLP	TF-SIGL-3333-SYM
		VEHICLE SIGNAL HEAD	TVH/TVHP	TF-SIGL-3333-SYM
		VEHICLE SIGNAL HEAD W/ARROW INDICATOR	TVHA/TVHAP	TF-SIGL-3333-SYM
		WIRE NOTE	TWN	TF-SIGL-3333-SYM

3333 – USE EXST/PROP

American Public Works Association Washington State Chapter

City of Bellevue

CHANNELIZATION SYMBOLS

SYMBOL EXIST.	SYMBOL PROP.	DESCRIPTION	BLOCK	LAYER
		BIKE PATH	CB/CBP	TF–CHAN–3333–SYM
		HANDICAP SYMBOL	CHS/CHSP	TF–CHAN–3333–SYM
		H.O.V. LANE SYMBOL	CHOV/CHOVP	TF–CHAN–3333–SYM
ONLY	ONLY	ONLY	CO/COP	TF–CHAN–3333–SYM
RR	RR	RAILROAD CROSSING	CRR/CRRP	TF–CHAN–3333–SYM
SCHOOL	SCHOOL	SCHOOL	CSC/CSCP	TF–CHAN–3333–SYM
STOP	STOP	STOP	CS/CSP	TF–CHAN–3333–SYM
		LANE CONTROL ARROWS: STRAIGHT ARROW	CSA/CSAP	TF–CHAN–3333–SYM
		LT.RT.STR.ARROW	CLRS/CLRSP	TF–CHAN–3333–SYM
		LEFT–RIGHT ARROW	CLR/CLRP	TF–CHAN–3333–SYM
		2–WAY LEFT TURN	C2W/C2WP	TF–CHAN–3333–SYM

3333 – USE EXST/PROP

American Public Works Association Washington State Chapter

City of Bellevue

CHANNELIZATION SYMBOLS

SYMBOL EXIST.	SYMBOL PROP.	DESCRIPTION	BLOCK	LAYER
		LEFT TURN ARROW	CLT/CLTP	TF–CHAN–3333–SYM
		RIGHT TURN ARROW	CRT/CRTP	TF–CHAN–3333–SYM
		LEFT–SRAIGHT ARROW	CLS/CLSP	TF–CHAN–3333–SYM
		RIGHT–STRAIGHT ARROW	CRS/CRSP	TF–CHAN–3333–SYM
		RAISED MARKERS:		
○	●	LANE MARKERS TYPE I	CLM1/CLM1P	TF–CHAN–3333–SYM
□	■	LANE MARKERS TYPE II	CLM2/CLM2P	TF–CHAN–3333–SYM
				3333 – USE EXST/PROP

GAS/POWER/TELEPHONE SYMBOLS

SYMBOL EXIST.	SYMBOL PROP.	DESCRIPTION	(ABBR)	BLOCK	LAYER
		GAS METER	(GM)	GMET/GMETP	GS–METR–3333–SYM
		GAS VALVE	(GV)	GV/GVP	GS–VALV–3333–SYM
△	▲	PAD MOUNTED TRANSFORMER	(P TRAN)	PTRAN/PTRANP	PO–STCR–3333–SYM
P	P	POWER VAULT	(POW V)	PV/PVP	PO–STCR–3333–SYM
⊠		TRANSMISSION TOWER	(TRANS TWR)	PTWR	PO–STCR–EXST–SYM
-o-	-●-	UTILITY POLE	(PP, TP)	UP/UPP	11–STCR–3333–SYM
←	←	UTILITY POLE ANCHOR		UPA/UPAP	11–STCR–3333–SYM
□	■	TELEPHONE RISER	(TEL R)	TELR/TELRP	TL–STCR–3333–SYM
T	T	TELEPHONE VAULT	(TEL V)	TV/TVP	TL–STCR–3333–SYM 11 – USE PO/TL 3333 – USE EXST/PROP

American Public Works Association Washington State Chapter

City of Bellevue

LINETYPES

LINETYPE	DESCRIPTION	COLOR	LT NAME	LAYER
	SURFACE FEATURES:			
0.2" 0.1"	BUILDING LINE (EXISTING) NO. 2.5 PEN	GREEN	EXBUILD	SF–BLDG–EXST–LIN
	BUILDING LINE (PROPOSED) NO. 2.5 PEN	GREEN	CONTINUOUS	SF–BLDG–PROP–LIN
1.5" 0.1" 0.1" 0.05"	CREEK/DITCH CENTERLINE (EXIST.) NO. 0 PEN	WHITE	DITCH	SF–DTCH–EXST–LIN
	CREEK/DITCH CENTERLINE (PROP.) NO. 2.5 PEN	GREEN	DITCH	SF–DTCH–PROP–LIN
	CURB/PAVEMENT/SIDEWALK (EX) NO. 0 PEN	WHITE	CONTINUOUS	SF–222A–EXST–LIN
	CURB/PAVEMENT/SIDEWALK (PROP) NO. 1 PEN	CYAN	CONTINUOUS	SF–222A–PROP–LIN
1.0" 0.075"	FENCE (EXISTING) NO. 000 PEN	YELLOW	FNC1	SF–FENC–EXST–LIN
	FENCE (PROPOSED) NO. 1 PEN	CYAN	FNC1	SF–FENC–PROP–LIN
1.0" 0.075"	GUARDRAIL (EXISTING) NO. 000 PEN	YELLOW	EGR1	SF–GURD–EXST–LIN
	GUARDRAIL (PROPOSED) NO. 1 PEN	CYAN	PGR1	SF–GURD–PROP–LIN
2.0" 0.1" 0.1"	LAKE/POND NO. 0 PEN	WHITE	LAKE	SF–LAKE–EXST–LIN
0.15" 0.15"	MARSH/SWAMP PERIMETER NO. 0 PEN	WHITE	MARSH	SF–SWMP–EXST–LIN
0.5" 0.1" 0.125"	RAILROAD NO. 0 PEN	WHITE	R1R1	SF–RLRD–EXST–LIN
0.075"	RETAINING WALL (EXISTING) NO. 0 PEN	WHITE	ERW1	SF–WALL–EXST–LIN
	RETAINING WALL (PROPOSED) NO. 1 PEN	CYAN	PRW1	SF–WALL–PROP–LIN
	RIVERBANK/SHORELINE NO. 1 PEN	CYAN	CONTINUOUS	SF–222B–EXST–LIN

222A – USE CURB/PVMT
222B – USE RIVR/SHOR

American Public Works Association Washington State Chapter

City of Bellevue

LINETYPES

LINETYPE	DESCRIPTION	COLOR	LT NAME	LAYER
	SURVEY:			
1.2" 0.05" 0.1"	CENTERLINE (EXISTING) NO. 000 PEN	YELLOW	EXCNTL	SV–CNTL–EXST–LIN
0.1"	CENTERLINE (PROPOSED) NO. 2.5 PEN	GREEN	PROCNTL	SV–CNTL–PROP–LIN
0.05"	CONTOUR (DEPRESSION) NO. 000 PEN	YELLOW	DEC1	SV–CONT–DEPR–LIN
0.5" * * * 0.1"	CONTOUR (EXISTING) NO. 000 PEN	YELLOW	CON	SV–CONT–EXST–LIN
* * *	CONTOUR (INDEX) NO. 1 PEN	CYAN	CON	SV–CONT–INDX–LIN
* * *	CONTOUR (PROPOSED) NO. 1 PEN	CYAN	CONTINUOUS	SV–CONT–PROP–LIN
0.1" 0.7" 0.04"	DONATION LAND CLAIM (EXIST.) NO. 1 PEN	CYAN	DLC	SV–DLCM–EXST–LIN
	DONATION LAND CLAIM (PROP.) NO. 2.5 PEN	GREEN	DLC	SV–DLCM–PROP–LIN
	EASEMENT (PERMANENT) NO. 1 PEN	CYAN	CONTINUOUS	SV–ESMT–PERM–LIN
0.4" 0.05"	EASEMENT (TEMPORARY) NO. 1 PEN	CYAN	TEMPESMT	SV–ESMT–TEMP–LIN
0.1" 0.05"	MEANDER LINE NO. 000 PEN	YELLOW	MEANDER	SV–MEAN–EXST–LIN
2.0" 0.075" 0.075"	PROPERTY LINE (EXISTING) NO. 000 PEN	YELLOW	PROPERT	SV–PROP–EXST–LIN
	PROPERTY LINE (PROPOSED) NO. 1 PEN	CYAN	PROPERT	SV–PROP–PROP
	RANGE/TOWNSHIP LINE NO. 2.5 PEN	GREEN	CONTINUOUS	SV–222A–EXST–LIN
0.5" 0.05" 0.1"	RESERVATION/PARK/FOREST (EX) NO. 1 PEN	CYAN	PARK	SV–PARK–EXST–LIN
	RESERVATION/PARK/FOREST (PRO) NO. 2.5 PEN	GREEN	PARK	SV–PARK–PROP–LIN
0.2" 0.05"	RIGHT–OF–WAY (EXISTING) NO. 1 PEN	CYAN	EXROW	SV–ROFW–EXST–LIN
0.1"	RIGHT–OF–WAY (PROPOSED) NO. 2.5 PEN	GREEN	CONTINUOUS	SV–ROFW–PROP–LIN
0.1"	RIGHT–OF–WAY (LIMITED ACCESS) NO. 1 PEN	CYAN	ROWL1	SV–LROW–EXST–LIN
	RIGHT–OF–WAY (LIMITED ACCESS) NO. 2.5 PEN	GREEN	ROWL1	SV–LROW–PROP–LIN
0.7" 0.05" 0.1"	SECTION LINE NO. 2.5 PEN	GREEN	SECT	SV–SECT–EXST–LIN
0.1" 0.7"	QUARTER SECTION LINE NO. 1 PEN	CYAN	QTRSECT	SV–QSCT–EXST–LIN
0.3" 0.1"	SIXTEENTH SECTION LINE NO. 1 PEN	CYAN	16THSECT	SV–16ST–EXST–LIN
0.8" 0.1" 0.2"	STATE/COUNTY/CORPORATE LIMIT NO. 2.5 PEN	GREEN	STATE	SV–222B–EXST–LIN
	STATE/COUNTY/CORPORATE LIMIT NO. 2.5 PEN	GREEN	STATE (PLINE .03"WIDE)	SV–222B–PROP–LIN

222A – USE RANG/TWNS
222B – USE STAT/CNTY/CITY
*** INSERT ELEVATION AT 6" INTERVALS (TEXT 0.1" HIGH)

American Public Works Association Washington State Chapter

City of Bellevue

LINETYPES

LINETYPE	DESCRIPTION	COLOR	LT NAME	LAYER
	UTILITIES (EXISTING):			
0.25" TV 0.1"	CABLE TELEVISION (AERIAL) NO. 0 PEN	RED	ATV	TV–ALIN–EXST–LIN
TV 0.1"	CABLE TELEVISION (BURIED) NO. 0 PEN	RED	TV	TV–BLIN–EXST–LIN
FM	FORCE MAIN NO. 0 PEN	MAGENTA	FM	SS–PLIN–EXST–LIN
G	GAS NO. 0 PEN	MAGENTA	G	GS–PLIN–EXST–LIN
O	OIL NO. 0 PEN	MAGENTA	O	OL–PLIN–EXST–LIN
0.25" P 0.1"	POWER (AERIAL) NO. 0 PEN	RED	AP	PO–ALIN–EXST–LIN
P	POWER (BURIED) NO. 0 PEN	RED	P	PO–BLIN–EXST–LIN
S	SANITARY SEWER NO. 0 PEN	WHITE	S	SS–GLIN–EXST–LIN
STE	STEAM NO. 0 PEN	MAGENTA	STE	ST–PLIN–EXST–LIN
D	STORM DRAINAGE NO. 0 PEN	WHITE	D	SD–2222–EXST–LIN
0.25" T 0.1"	TELEPHONE (AERIAL) NO. 0 PEN	RED	AT	TL–ALIN–EXST–LIN
T	TELEPHONE (BURIED) NO. 0 PEN	RED	T	TL–BLIN–EXST–LIN
0.1" 0.05"	UTILITY SERVICE LINE (GENERAL) NO. 000 PEN	YELLOW	SERV	11–SERV–EXST–LIN
W	WATER NO. 0 PEN	MAGENTA	W	WA–2222–EXST–LIN
	UTILITIES (PROPOSED):			
	MAIN LINE (LIST TYPE, SIZE, ETC.) NO. 0 PEN	*	CONTINUOUS (P–LINE .04" WIDE)	11–2222–PROP–LIN
	SERVICE (LIST TYPE, SIZE, ETC.) NO. 0 PEN	*	CONTINUOUS	11–SERV–PROP–LIN

* COLOR DEPENDS ON TYPE OF UTILITY (E.G. POWER, WATER, ETC.). TEXT IN UTILITY LINETYPES SPACED AT 3" INTERVALS.

11 – INDICATE UTILITY TYPE

2222 – USE ALIN/BLIN/GLIN/PLIN
ALIN – AERIAL LINE
BLIN – BURIED CONDUIT
GLIN – GRAVITY LINE
PLIN – PRESSURE LINE

American Public Works Association Washington State Chapter

City of Bellevue

TEXT STYLES

EXAMPLE	DESCRIPTION	STYLE	FONT	HEIGHT	COLOR	LAYER
EX. CONIFER	EXISTING FEATURES	80	SIMPLEX	0.08 INCH	YELLOW	SF-INFO-EXST-TXT
SCALE:	DRAWING SCALE	SCALE	ITALIC	0.12 INCH	YELLOW	SV-NORA-EXST-TXT
PROJECT	PROJECT TITLE	200	SIMPLEX	0.20 INCH	GREEN	RE-TITL-EXST-TXT
PROPOSED	GENERAL INSTRUCTION	120	SIMPLEX	0.12 INCH	CYAN	RE-INST-PROP-TXT
SEWER	PROPOSED SANITARY SEWER INSTRUCTIONS	120	SIMPLEX	0.12 INCH	CYAN	SS-INST-PROP-TXT
WATER	PROPOSED WATER INSTRUCTIONS	120	SIMPLEX	0.12 INCH	CYAN	WA-INST-PROP-TXT
STREET	STREET NAMES	240	SIMPLEX	0.24 INCH	GREEN	RE-STRT-EXST-TXT

NOTES

1. READ APWADOC2.DOC FOR MORE INFORMATION ON SYMBOL/LINETYPE INSERTION AND USE OF APWA MENUS.
2. INSERT MON OR MON-IN-CASE SYMBOLS INTO CENTER OF MONUMENTED SECTION CORNERS.
3. USE WATER VALVE AND FITTING SYMBOLS FOR SEWER FORCEMAIN VALVES AND FITTINGS.
4. LINETYPES ARE LOADED FROM THE APWALIN2.LIN LINETYPE FILE.
5. DITCH LINETYPE FLOW DIRECTION ARROW MUST BE INSERTED AT ENDS OF DASHED LINES AS SHOWN ABOVE (BLOCK NAME IS "FL").
6. COMPOSITE LINETYPES ARE DRAWN USING LISP ROUTINES IN APWA MENUS. ALTERNATE METHOD IS TO INSERT BLOCKS ALONG CONTINUOUS LINES AS FOLLOWS:

LINETYPE	BLOCK	SPACING (INCHES)
EXISTING FENCE	FP	1.0
PROPOSED FENCE	FP	1.0
EXISTING GUARDRAIL	GR	1.0
PROPOSED GUARDRAIL	GRP	1.0
EXISTING RAILROAD	RR	0.5
EXISTING RETAINING WALL	EW	0.25
PROPOSED RETAINING WALL	PW	0.25
DEPRESSION CONTOUR	DEP	0.1
LIMITED ACCESS R.O.W.	LA	0.1

7. LINEWEIGHTS ARE BASED ON DISPOSABLE LIQUID INK PLOTTER

POINT SIZES:

COLOR	PEN SIZE	NUMBER
YELLOW	0.25	3x0
MAGENTA RED WHITE	0.35	0
CYAN	0.5	1
GREEN	0.7	2 1/2

American Public Works Association — Washington State Chapter

City of Bellevue

APPENDIX D-3

SAMPLE TITLE BLOCK

Also available in AutoCAD format at:

http://www.bellevuewa.gov/utilities_maps_forms.htm

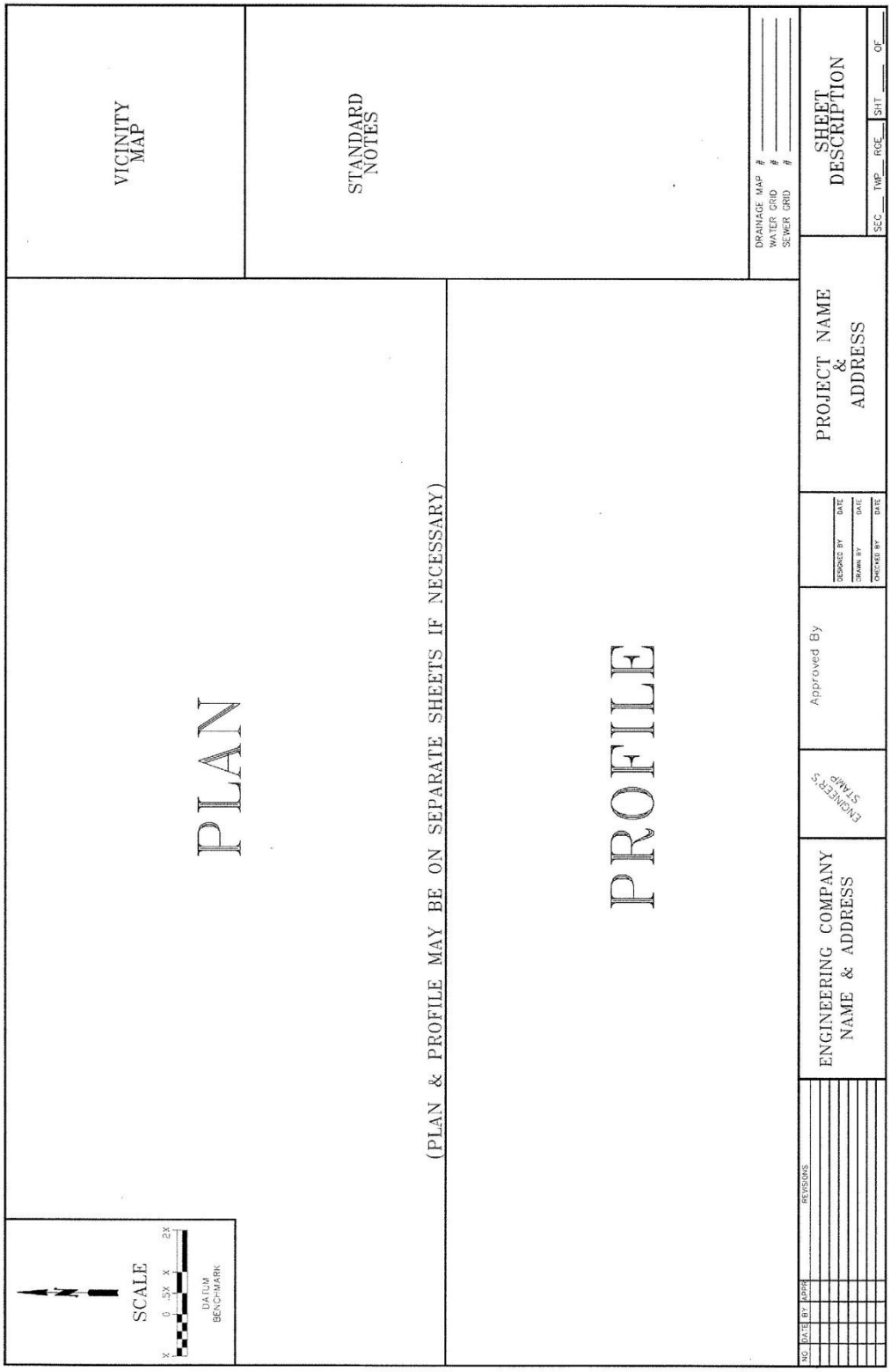
VICINITY MAP
STANDARD NOTES
DRAINAGE MAP #
WATER GRID #
SEWER GRID #
SHEET DESCRIPTION
SEC TWP RGE SHT OF
PLAN
(PLAN & PROFILE MAY BE ON SEPARATE SHEETS IF NECESSARY)
PROFILE
PROJECT NAME & ADDRESS
DESIGNED BY DATE
DRAWN BY DATE
CHECKED BY DATE
Approved By
ENGINEER'S STAMP
ENGINEERING COMPANY NAME & ADDRESS
SCALE
X 0 .5X X 2X
DATUM BENCH-MARK
NO. DATE BY APPR REVISIONS

APPENDIX D-4

STORM AND SURFACE WATER APPROVED MATERIALS LIST

The following manufacturers have been approved for use for storm and surface water construction.

BIORETENTION SOIL MIX (BSM) MATERIALS

Gravelly sands
Green Earth Screen Sand (Green Earth Technologies, Bellingham)
Miles Sand and Gravel Utility Sand (Miles Sand and Gravel, Roy)

COMPOST AND MULCH FOR BIORETENTION

Compost Mixes
Cedar Grove compost (Maple Valley)
GroCo, Steerco (many suppliers)

OVERFLOWS FOR BIORETENTION

Overflow products
Atrium grates 3”, 4”, and 5”: NDS models 70, 75, and 80
Atrium grate: ADS model 0663DX
Neenah grate: R-4346, R-2560-E2, R-2561, R-4351-C, R-4353, R-4351-B, R-4351-D
Olympic Foundry: MH25

PERVIOUS PAVEMENT MATERIALS

Wearing Course
Invisible Structures GrassPave2
Presto Geosystems
Uni-Eco-Stone
Uni-Ecoloc
Eco-Priori
Hastings Check Block
Grasscrete
Turfstone
Geoblock 5150
Tufftrack Grassroad Pavers
Grassy Pavers
Invisible Structures Gravelpave2
Turf & Gravel Pavers
Aqua Pave Old Countrystone
Aqua Pave Standard
Aqua Pave Venetian Cobble

Geotextile products

Geotextile Nonwoven polypropylene:
Ling Industrial Fabrics, Inc. model 275EX
TNS Advantaged Technologies models R060, R080
Carthage Mills models FX60HS, FX70HS, and FX80HS
DuPont DeNemours model SF65
Ten Carte (Mirafi) models 600X, FW700, 1120N
Skaps Industries LLC model GT60
Propex Inc. model GeoTex801

Underdrain Materials for Bioretention or Pervious Pavement
Pipe Manufacturers: Johnson, CertainTeed Corporation Lodi, CA

Couplers: Fernco, Davision, MI

OBSERVATION PORTS FOR PERVIOUS PAVEMENTS OR BIORETENTION

Expandable pipe plugs: Cherne Gripper plugs models MC-99930, MC-99929, MC-99931, MC-99935

ROOF DOWNSPOUT DISPERSION MATERIALS

Pop-up drainage emitter: NDS model L422G

RAIN RECYCLING MATERIALS

Rain barrels: Chicago model 18122, Suncast model RB5010PK, Emsco model 2771-1, Mayne model 5847WH, Fiskars model 5997

STORM DRAIN PIPE AND CULVERT MATERIALS

All manufacturers that meet the performance requirements specified under the material section of the Standards including the following:

Profile Wall PVC Pipe: “PW Pipe” Pacific Western Extruded Plastics, Eugene OR; “Ultra Rib” lpex Inc., Langley, British Columbia, Canada

Corrugated Polyethylene Pipe: Advanced Drainage Systems, Inc., Washougal WA; Hancore, Inc., Olympia WA

Corrugated Polyethylene Tubing: Advanced Drainage Systems, Inc., Washougal WA; Hancore, Inc., Olympia WA

MISCELLANEOUS MATERIALS

Residential catch basins: ADS models 0909SD2, 0909SD4, 1212SD2, 1212SD4; Hanson Type 45; Nyloplast Drawing No. 7001-110-374; NDS # 1216, 1217, 1225

VAULT HATCH/DOOR

L.W. Products Company, Inc., Models HHD and HHS (H-30 rated)

Hatches shall include recessed padlock hasp sized to accept City of Bellevue Surface Water Division padlocks.

Metal lids, hatches and access covers shall be constructed with a gray non-slip treatment by one of the approved products below:

Manufacturer	*COF	Product
LW Products	.95	Thermion Arc Metal Spray
SlipNOT Metal Safety Flooring	.99	SlipNOT Grip Plate
IKG Industries	>.80	MEBAC 1 (Metal Bonded Anti-Slip Coatings)
Grating Pacific LLC	.92	ALGRIP Safety Floor Plates

*COF – coefficient of friction as determined by ASTM C1028-89

See Section D6-04 NDP Materials and Chapter D-7 Materials for approved manufacturers of other materials for storm and surface water construction. Where specific manufacturers are listed, no other manufacturer may be used without prior approval by the Utility.

APPENDIX D-5

STORM AND SURFACE WATER REFERENCE STANDARDS

1. STANDARDS FOR UTILITIES INSTALLED IN PROXIMITY OF SEATTLE PUBLIC UTILITIES TRANSMISSION PIPELINES.....A(D5-1)

Standards for Utilities Installed in Proximity of Seattle Public Utilities Transmission Pipelines:

Seattle Public Utilities (SPU) operates several major water transmission pipelines within King County. These pipelines supply nearly all the domestic water to the communities in western King County. In some cases these pipelines are located within SPU's fee-owned right of way, within easements on private property or within the city streets, county road or state highways.

Vibrations, heavy loads, and other construction activities can damage these pipelines. If a pipeline is damaged there could be substantial collateral damage. For this reason SPU needs to review plans and apply standard pipe protection procedures for any project in close proximity to, or that will cross these pipelines.

In order to review any such project SPU will need:

- 3 copies of scalable plans that show the proposed improvements as they are located in relation to SPU facilities or electronic plans in pdf format.
- Names, addresses, and telephone numbers for the appropriate contact persons of the entity (ies) responsible for the work, including a contact person whom can be reached 24 hours a day.
- SPU's Record Plans can be obtained from the City of Seattle Vault which is located at 47th floor of the City of Seattle Municipal Tower, 700 5th Ave., Seattle, 98124. Phone: 206-684-5132.
  http://www.seattle.gov/util/Engineering/Records_Vault/Hours_&_Location/COS_001833.asp

SPU's General Design Requirements:

- When crossing SPU's pipelines the installed "facility" should be at a right angle to SPU's pipeline or parallel with the centerline of a controlling road.
- When crossing SPU's pipelines the vertical separation between the installed facility and SPU's pipelines should be 18 inches for a sewer line and 12 inches for all other facilities over the pipelines. The separation should be a minimum of 24 inches for all facilities installed under the pipelines.
- When crossing SPU's pipelines with a water or sewer main of ductile iron pipe (d.i.p.), one (19 to 20 foot) section must be centered on SPU's pipeline so that the section joints are not over or under any portion of SPU's pipeline. The joints must be pressurized and tested for leaks.
- When crossing SPU's pipelines, if the installed facility is not made of ductile iron pipe, the facility must be installed in a steel casing with walls at least 1/4 inch thick.
- When crossing SPU’s pipelines if the facility is installed within SPU fee-owned right-of-way, the steel casing must be installed the entire width of the right of way. If the facility is installed within a street right of way, the steel casing must extend at least 10 feet on each side of the pipeline.
- SPU's pipelines are set in a bed of pea gravel. Construction must be performed in a manner that will not allow the pea gravel to escape from under the pipeline.
- Construction methods must be employed to support the pipeline during excavation.

- "Trenchless" construction methods must be approved on a site by site basis due to the high probability of substantial collateral damage if one of SPU's pipelines is damaged.
- Cathodic pipe protection methods may be required.
- For parallel installations, SPU would like 10 feet of separation on each side of its pipelines.
- Shallow curb inlets can be closer than 10 feet if ductile iron is used and the drain line diverts the water to a catch basin at a remote location.
- Special protections or bridging methods may be required to protect the pipeline due to the width and/or depth of trenching in the vicinity of SPU pipelines.
- If SPU's pipeline is exposed, SPU wants to inspect the pipe prior to back filling.
- Special fill and/or compaction may be required depending on the method and depth of excavation.
- Overhead wire installations typically require a minimum of 25 feet of vertical clearance from the ground.
- Vibrations could damage some of SPU's pipelines; therefore pile driving, blasting and other vibration producing work may be restricted.
- Heavy loads could damage some of SPU's pipelines. Therefore pipe protection may be necessary if heavy equipment crosses the pipe. Typical protection would include temporary bridging using timbers and steel plate.

SPU Operations requirements:

- Notify SPU at least 48 hours notice prior to construction. Locating SPU's pipeline by potholing must be supervised. Call SPU's Lake Youngs Operations at 206-684-3933.
- Any work in close proximity to SPU's pipeline (including locating by potholing) must be supervised by SPU. Call SPU's Lake Youngs Headquarters at 206-684-3933 at least 48 hours in advance.

Questions

Teri Hallauer
Sr. Real Property Agent
206-684-5971
Fax: 206-615-1215
teri.hallauer@seattle.gov

Seattle Public Utilities Real Estate Services
Seattle Municipal Tower
700 Fifth Avenue, Suite 4900
P.O. Box 34018
Seattle, WA 98124-4018

Audrey Hansen
Manager, Real Estate Services
206-684-5877