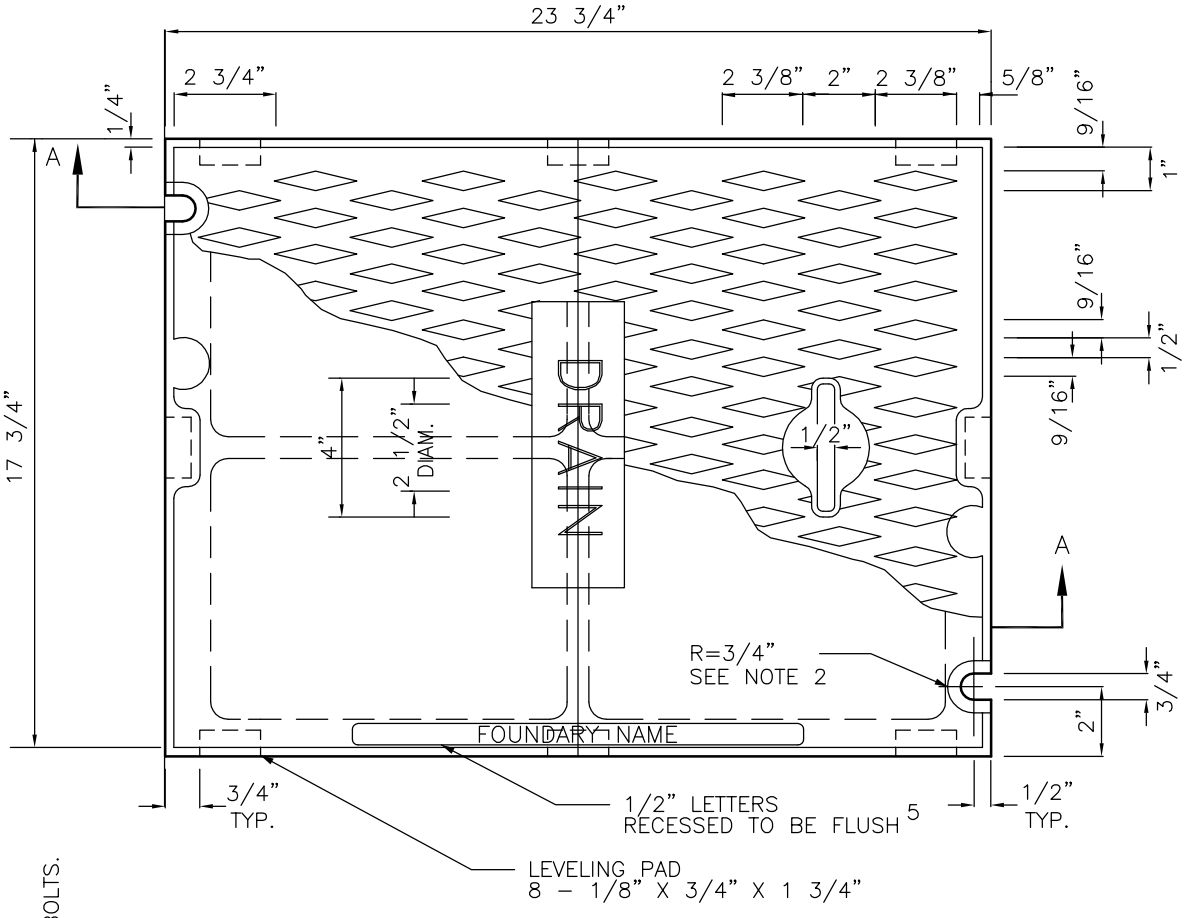

PLAN COVER

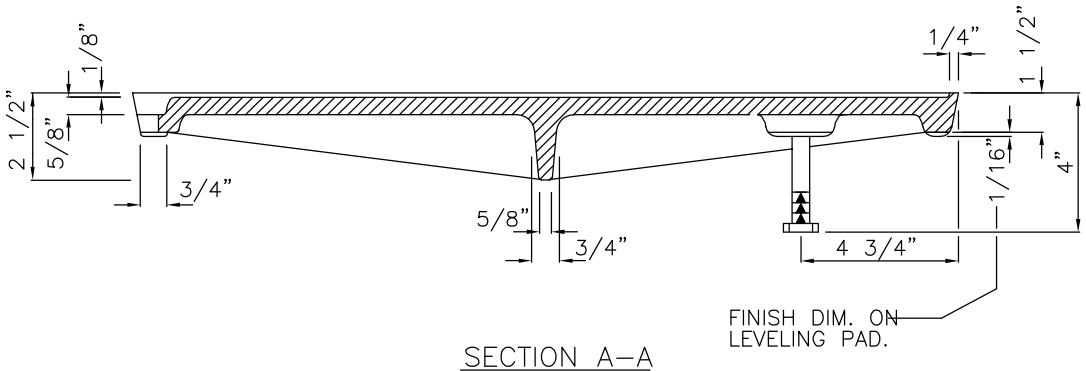

SECTION A–A

NOTES:

1. USE WITH FRAME DRILLED AND TAPPED FOR LOCKING BOLTS.
2. USE WITH TWO LOCKING BOLTS 5/8"–11 NC STAINLESS STEEL TYPE 304 STEEL SOCKET HEAD (ALLEN HEAD) BOLTS, 2" LONG.
3. COVER MATERIAL IS DUCTILE IRON.
4. SHALL CONFORM TO SEC. 7.05 OF THE STANDARD SPECIFICATIONS.
5. COVER SHALL HAVE THE WORD "DRAIN" IN 2–INCH RAISED LETTERS.

4ANUARY 2014 NO SCALE

City of Bellevue

STORM AND SURFACE WATER UTILITY

TITLE

SOLID COVER

NO. D–8