OUTLET PIPE DIAMETER	AREA INLET DIAMETER "I.D."	AVERAGE CONCRETE PIPE (lbs.)	NYLOPLAST AREA INLET (lbs.)
4"	12"	450	33
6"	12"	450	33
8"	18"	650	64

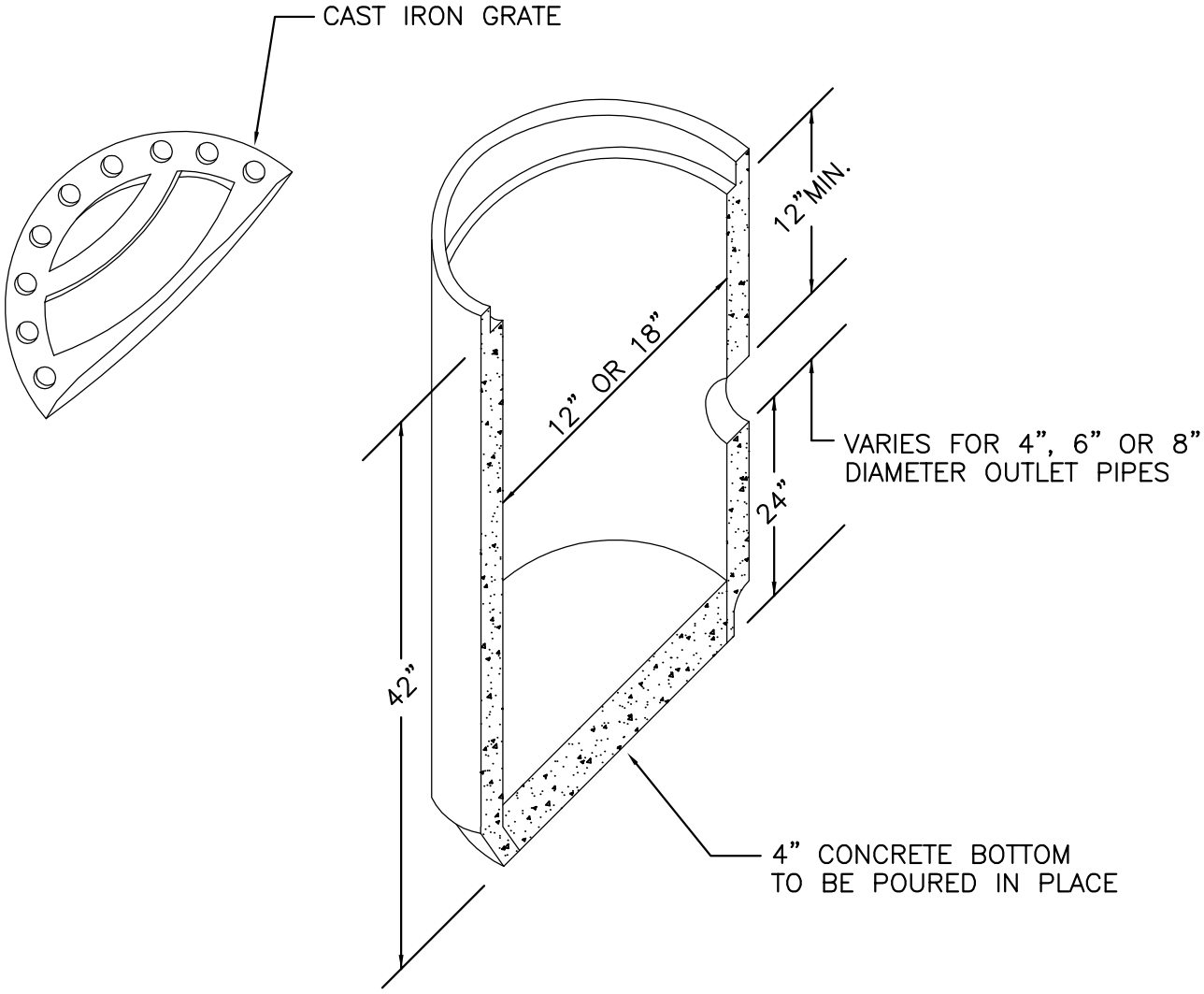

NOTES:

1. FOR USE IN NON-TRAFFIC AREAS ONLY
2. AREA INLET EITHER CONCRETE AS SHOWN, OR PVC STRUCTURE WITH DUCTILE IRON GRATE AS MANUFACTURED BY NYLOPLAST.

City of Bellevue

SURFACE WATER UTILITY

TITLE

AREA INLET

JANUARY 2014

NO SCALE

NO. D-16