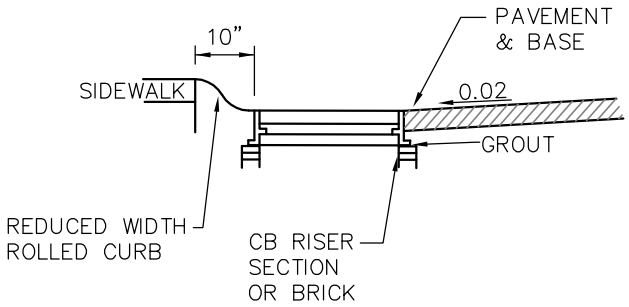

ELEVATION A–A

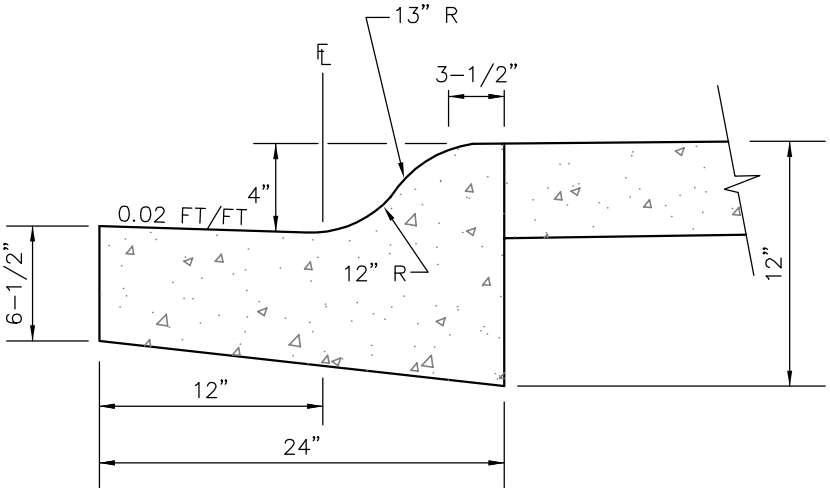

ELEVATION B–B

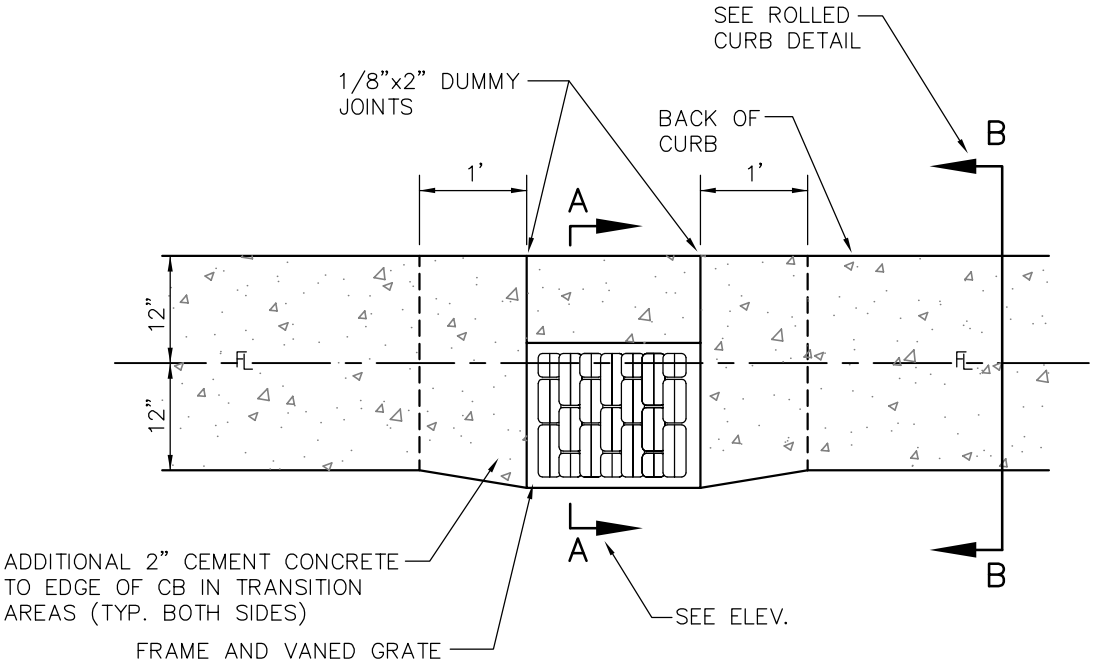

NOTES:

1. WHEN A THRU–CURB INLET IS REQUIRED, USE A ROLLED CURB FRAME AND GRATE.

City of Bellevue

STORM AND SURFACE WATER UTILITY

TITLE

GRATE FOR EXISTING ROLLED CURB INSTALLATION

JANUARY 2014

NO SCALE

NO. D–14