CITY OF BELLEVUE

UTILITIES DEPARTMENT

WATER ENGINEERING STANDARDS

JANUARY 2013

www.bellevuewa.gov/utilities_codes_standards_intro.htm

WATER ENGINEERING STANDARDS

TABLE OF CONTENTS

CHAPTER W1 - GENERAL REQUIREMENTS

W1-01 GENERAL ..... W1 - 1

W1-02 DEFINITIONS ..... W1 - 1

W1-03 REFERENCES ..... W1 - 4

W1-04 GOVERNMENTAL AGENCY REQUIREMENTS ..... W1 - 4

CHAPTER W2 - PLAN SUBMITTAL

W2-01 GENERAL ..... W2 - 1

W2-02 DEVIATIONS ..... W2 - 1

W2-03 ERRORS AND OMISSIONS ..... W2 - 1

W2-04 PLANS ..... W2 - 1

W2-05 AS-BUILT DOCUMENTATION ..... W2 - 6

CHAPTER W3 - WATER PLANNING/DESIGN STANDARDS

W3-01 PLANNING CRITERIA ..... W3 - 1

W3-02 GENERAL DESIGN STANDARDS ..... W3 - 2

W3-03 VALVING ..... W3 - 4

W3-04 FIRE HYDRANTS ..... W3 - 5

W3-05 PIPE CLASS / PROTECTION / COVER ..... W3 - 6

W3-06 CLEARANCES / OTHER UTILITIES ..... W3 - 7

W3-07 SLOPES ..... W3 - 8

W3-08 CONNECTIONS TO EXISTING SYSTEM ..... W3 - 9

W3-09 EASEMENTS ..... W3 - 10

W3-10 SERVICES ..... W3 - 11

W3-11 BACKFLOW PREVENTION ..... W3 - 12

W3-12 LANDSCAPE WATER BUDGETING REQUIREMENTS ..... W3 - 13

W3-13 IRRIGATION SYSTEM DESIGN AND PERFORMANCE REQUIREMENTS ..... W3 - 20

CHAPTER W4 - WATER MATERIALS

W4-01 GENERAL ..... W4 - 1

W4-02 WATER PIPE ..... W4 - 1

W4-03 POLYETHYLENE ENCASEMENT ..... W4 - 1

W4-04 FITTINGS ..... W4 - 1

W4-05 GALVANIZED IRON PIPE ..... W4 - 2

W4-06 COUPLINGS ..... W4 - 2

W4-07 ADAPTERS ..... W4 - 2

W4-08 BOLTS IN PIPING ..... W4 - 2

W4-09 FLANGE GASKETS ..... W4 - 3

W4-10 GATE VALVE ..... W4 - 3

W4-11 VALVE BOX ..... W4 - 3

W4-12 VALVE OPERATING NUT EXTENSION ..... W4 - 3

W4-13 BUTTERFLY VALVE ..... W4 - 4

W4-14 CHECK VALVE ..... W4 - 4

W4-15 AIR AND VACUUM RELEASE VALVE ..... W4 - 4

W4-16 PRESSURE REDUCING STATION ..... W4 - 4

W4-17 LIDS, HATCHES AND COVERS - SLIP RESISTANCE ..... W4 - 5

W4-18 CITY-FURNISHED INDIVIDUAL PRESSURE
REDUCING VALVE (RESIDENTIAL) ..... W4 - 6

W4-19 CITY-FURNISHED INDIVIDUAL PRESSURE
REDUCING VALVE (MULTI-FAMILY OR COMMERCIAL) ..... W4 - 6

W4-20 FIRE HYDRANT ..... W4 - 6

W4-21 HYDRANT GUARD POSTS ..... W4 - 7

W4-22 METER SETTER ..... W4 - 7

W4-23 CORPORATION STOP ..... W4 - 7

W4-24 METER BOX ..... W4 - 7

W4-25 COPPER SERVICE PIPE ..... W4 - 7

W4-26 Not Used ..... W4 - 7

W4-27 PIPE INSULATION ..... W4 - 8

W4-28 CONCRETE BEDDING & BLOCKING ..... W4 - 8

W4-29 JOINT RESTRAINT ..... W4 - 8

W4-30 REDUCED PRESSURE BACKFLOW ASSEMBLY ..... W4 - 9

W4-31 REDUCED PRESSURE DETECTOR ASSEMBLY ..... W4 - 9

W4-32 DOUBLE CHECK VALVE ASSEMBLY ..... W4 - 9

W4-33 DOUBLE CHECK DETECTOR ASSEMBLY ..... W4 - 9

W4-34 BACKFLOW ASSEMBLY RESILIENT SEATED
SHUT-OFF VALVES ..... W4 - 10

W4-35 BARRIER FENCE ..... W4 - 10

W4-36 BEDDING AND BACKFILL ..... W4 - 10

W4-37 STEEL CASING ..... W4 - 13

W4-38 CASING SPACER ..... W4 - 13

CHAPTER W5 - WATER METHODS OF CONSTRUCTION

W5-01 GENERAL CONSTRUCTION REQUIREMENTS ..... W5 - 1

W5-02 SURFACE WATER QUALITY ..... W5 - 1

W5-03 LAYING DUCTILE IRON PIPE ..... W5 - 2

W5-04 POLYETHYLENE ENCASEMENT ..... W5 - 2

W5-05 LAYING GALVANIZED IRON PIPE ..... W5 - 2

W5-06 FIRE HYDRANT INSTALLATION ..... W5 - 3

W5-07 VALVE INSTALLATION ..... W5 - 3

W5-08 AIR VACUUM INSTALLATION ..... W5 - 4

W5-09 VALVE BOX MARKER INSTALLATION ..... W5 - 4

W5-10 SERVICE LINES ..... W5 - 4

W5-11 PRESSURE REDUCING STATION ..... W5 - 5

W5-12 CITY-FURNISHED INDIVIDUAL PRESSURE REDUCING VALVE ..... W5 - 5

W5-13 CONCRETE BLOCKING ..... W5 - 6

W5-14 CONNECTION TO EXISTING WATER MAIN ..... W5 - 6

W5-15 ORDER OF CONSTRUCTION ..... W5 - 7

W5-16 HYDROSTATIC TESTS ..... W5 - 7

W5-17 STERILIZATION & FLUSHING OF WATER MAINS ..... W5 - 8

W5-18 PRECONSTRUCTION PHOTOS FOR CITY CONTRACTS ..... W5 - 9

W5-19 UNDERGROUND UTILITIES ..... W5 - 9

W5-20 CONSTRUCTION ON EASEMENTS ..... W5 - 10

W5-21 DUST CONTROL ..... W5 - 10

W5-22 BARRIER FENCE ..... W5 - 10

W5-23 TRENCH EXCAVATION ..... W5 - 10

W5-24 SHEETING & SHORING ..... W5 - 11

W5-25 TRENCH DEWATERING ..... W5 - 11

W5-26 BEDDING, BACKFILL AND COMPACTION ..... W5 - 12

W5-27 TRENCHLESS EXCAVATION ..... W5 - 14

W5-28 ADJUST EXISTING STRUCTURE TO GRADE ..... W5 - 15

W5-29 ABANDONING FACILITIES ..... W5 - 16

W5-30 LAWN REMOVAL AND REPLACEMENT ..... W5 - 16

W5-31 BORING UNDER ROOTS ..... W5 - 17

W5-32 HIGHWAY AND RAILROAD CROSSINGS ..... W5 - 17

W5-33 BORING AND JACKING STEEL CASING ..... W5 - 17

W5-34 WORKING WITH ASBESTOS CEMENT PIPE ..... W5 - 18

W5-35 ASBESTOS CEMENT WATER MAIN CROSSINGS ..... W5 - 18

W5-36 VAULT INSTALLATION ..... W5 - 18

W5-37 CLEARANCES/OTHER UTILITIES ..... W5 - 19

CHAPTER W6 - SUMMARY OF UNDERGROUND FIRE SYSTEM INSTALLATION REQUIREMENTS FOR COMMERCIAL/MULTI-FAMILY PROJECTS (FOR SERVICES GREATER THAN 2 INCHES IN DIAMETER)

W6-01 GENERAL ..... W6 - 1

W6-02 PERMITTING ..... W6 - 1

W6-03 INSTALLATION ..... W6 - 1

W6-04 INSPECTIONS ..... W6 - 1

W6-05 MATERIALS & CONSTRUCTION REQUIREMENTS ..... W6 - 2

APPENDICES

APPENDIX W-1
WATER WORKS STANDARD DETAILS ..... A(W1 - 1)

APPENDIX W-2
DRAFTING STANDARDS ..... A(W2 - 1)

APPENDIX W-3
SAMPLE TITLE BLOCK ..... A(W3 - 1)

APPENDIX W-4
WATER APPROVED MATERIALS LIST ..... A(W4 - 1)

APPENDIX W-5
WATER WORKS REFERENCE STANDARDS ..... A(W5 – 1)

CHAPTER W1 - GENERAL REQUIREMENTS

TABLE OF CONTENTS

W1-01 GENERAL ..... W1 - 1

W1-02 DEFINITIONS ..... W1 - 1

W1-03 REFERENCES ..... W1 - 4

W1-04 GOVERNMENTAL AGENCY REQUIREMENTS ..... W1 – 4

CHAPTER W1 - GENERAL REQUIREMENTS

W1-01 GENERAL

These Engineering Standards set forth minimum standards for the planning, design, and construction of water facilities.

The Water Utility Code, part of Chapter 24.02 of the Bellevue City Code, adopted April 3, 1995, is the basis for these Engineering Standards.

These Standards do not include design of special facilities, such as Pump Stations or Reservoirs. These special facilities require unique design requirements and will be subject to individual review by the Utility.

Although these Standards are intended to apply to physical development within the Utility, the Standards will not apply for all situations. Compliance with these Standards does not relieve the designer of the responsibility to apply conservative and sound professional judgment. These are minimum Standards and are intended to assist, but not substitute for competent work by design professionals. The Utility may at its sole discretion due to special conditions and/or environmental constraints, require more stringent requirements than would normally be required under these Standards.

W1-02 DEFINITIONS

The following terms as used in this document shall be defined and interpreted as follows:

"ADA"

Americans With Disabilities Act (ADA) of 1990. 42 USC 12101 et seq with implementing regulations. See ADA Home Page: http://www.ada.gov

"Central Business District (CBD)"

That area of Bellevue generally bounded by Main Street, NE 12th Street, 100th Avenue NE, and 112th Avenue NE.

"Contractor"

The person, partnership, firm or corporation contracting to do the work under these Documents. The term shall also include the Contractor's agents, employees and subcontractors.

"Details or Additional Drawings"

All details or drawings prepared to further explain or amplify the plans, or for the revision of the same, all as herein provided.

"Developer"

Any individual, company, partnership, joint venture, corporation, association, society or group that has made, or intends to make, application to the City for permission to construct a water system connection, or extension, to the City's water system.

"Engineer"

The City of Bellevue Utilities Engineer or his duly authorized assistants, which includes Chief Engineer, Project Engineer, Consultant Engineer and/or Inspectors.

"Equipment"

The machinery, accessories, appurtenances and manufactured articles to be furnished and/or installed under the Project.

"Material or Materials"

These words shall be construed to embrace machinery, manufactured articles, materials of construction (fabricated or otherwise) and any other classes of material to be furnished in connection with the Project.

"Multiple Use Building"

A building, or set of buildings with multiple tenant spaces, not including residential-only structures, served by a shared domestic water service. Ex. Strip malls.

"Or Equal"

Any manufactured article, material, method, or work which, in the opinion of the Engineer, is equally desirable or suitable for the purposes intended in these standards as compared with similar articles specifically mentioned herein.

"Plan"

All official drawings or reproductions of drawings made or to be made pertaining to the work provided for in the permit or developer extension agreement.

"Plumbing Code"

The Uniform Plumbing Code as adopted by the COB City Council, together with amendments, additions and exemptions per Municipal Code 23.60.

"Premise Isolation"

A method of protecting the public water system by installation of approved air gaps or approved backflow prevention assemblies at or near the service connection or alternative location acceptable to the purveyor to isolate the consumer's water system from the purveyor's distribution system.

"Project"

The structure or improvement to be constructed in whole or in part.

"Reference Specifications"

Reference specifications shall mean the technical specifications of other agencies incorporated or referred to herein.

"Specifications"

The specifications shall mean the prescribed directions, requirements, explanations, terms and provisions pertaining to the various features of the work to be done, or manner and method of performance. They also include directions, requirements, and explanations as set forth on the plans.

"Standard Details"

City of Bellevue Utilities Department standard detail drawings.

"Standard Specification"

"2010 Standard Specifications for Road, Bridge and Municipal Construction", English edition, Washington State Department of Transportation and the American Public Works Association including all amendments.

"Unapproved Auxiliary Supply"

A water supply (other than the purveyor's water supply) on or available to the consumer's premises that is either not approved for human consumption by the health agency having jurisdiction or is not otherwise acceptable to the purveyor. Sites with unapproved auxiliary supplies require premise isolation.

"Words and Phrases"

Whenever the words, "as directed", 'as required', "as permitted", or words of like effect are used, it shall be understood that the direction, requirement or permission of the Engineer is intended. The words, "sufficient", "necessary", "proper", and the like shall mean sufficient, necessary or proper in the judgment of the Engineer. The words, "approved", "acceptable", "satisfactory", or words of like import shall mean approved by or acceptable to the Engineer.

"Work"

The work necessary to manufacture and deliver machinery, equipment and material and/or the furnishing of all labor, tools, material, equipment, construction equipment, working drawings, where required, and other, necessities for the construction or erection of the structures shown and called for in the plans, specifications and permit/Developer Extension Agreement, and the act of constructing or erecting said structures complete.

W1-03 REFERENCES

Wherever references are made to the standards, specifications, or other published data of the various national, regional, or local organizations, such organizations may be referred to by their acronym or abbreviation only. As a guide to the user, the following acronyms or abbreviations which may appear, shall have the meanings indicated herein:

AASHTO	American Association of the State Highway and Transportation Officials.
ANSI	American National Standards Institute, Inc.
WSDOT	Washington State Department of Transportation
APWA	American Public Works Association
ASTM	American Society for Testing and Materials
AWWA	American Water Works Association
DOH	Department of Health
UPC	Uniform Plumbing Code
WAC	Washington Administrative Code

W1-04 GOVERNMENTAL AGENCY REQUIREMENTS

All construction on City, County or State roads or right-of-way shall be done in accordance with the agency's standards and requirements and in accordance with the franchise and/or permit requirements. The Contractor is responsible to determine these requirements prior to construction.

Where conflict exists between these Standards and permit requirements, the most stringent permit requirements shall take precedence.

Metal lids, hatches and manhole covers located in sidewalks, crosswalks or other pedestrian areas must comply with ADA requirements and have a slip resistant surface.

END OF CHAPTER W1

CHAPTER W2 - PLAN SUBMITTAL

TABLE OF CONTENTS

W2-01 GENERAL ..... W2 - 1

W2-02 DEVIATIONS ..... W2 - 1

W2-03 ERRORS AND OMISSIONS ..... W2 - 1

W2-04 PLANS ..... W2 - 1

W2-05 AS-BUILT DOCUMENTATION ..... W2 - 6

CHAPTER W2 - PLAN SUBMITTAL

W2-01 GENERAL

Following these standards to design the water system will help ensure a timely review of the proposed project and keep review costs to a minimum.

W2-02 DEVIATIONS

W2-02.1 General

The Developer may propose a deviation from the Standards. A non-standard system may take longer to review resulting in increased processing costs. The Developer acknowledges these risks when submitting a non-standard system for review.

W2-02.2 Deviation Criteria

Requests for deviations which are site or project specific shall be reviewed by the Utilities Technical Committee (Engineering Team). The City's decision to grant, deny, or modify the proposed deviation shall be based upon evidence that the deviation request meets the following criteria:

A. The change will achieve the intended result through a comparable or even superior design; and

B. The change will not adversely affect safety and/or operation; and

C. The change will not adversely affect maintainability.

W2-03 ERRORS AND OMISSIONS

Any errors or omissions in the approved plans or information used as a basis for such approvals may constitute grounds for withdrawal of any approvals and/or stoppage of any or all of the permitted work, as determined by the City. It shall be the responsibility of the Developer to show cause why such work should continue, and make such changes in plans that may be required by the City before the plans are re-approved.

W2-04 PLANS

W2-04.1 General

Utility plans submitted for review shall meet "Boundary & Topographic Survey" and "Site Plan B" requirements. Current copies of these requirements are available at the City Hall

Permit Center. The Utilities representative at the Permit Center will determine which requirements, if any, are not applicable to the proposed project.

W2-04.2 Submittal Standards

Combining Plans - Water, sanitary sewer and storm drainage designs (complete plan and profile) shall be on separate plan sheets, although alignments of all Utilities shall be shown on each utility plan. Plan sets for all three Utilities can be combined for small projects. Designs for water and sewer can be combined on the same plan sheets if plan scale is 1"=10', 1"=20', or 1"=30'. Contact the Utility representative in the Permit Center for approval to combine plans.

Submittals shall include:

Title Block - Border and title block shall conform to standard City of Bellevue format. See Appendix W-3.

Project Name, Section - Township - Range, and Site Address shall be included in title block (lower right hand corner).

Engineering Plans - Plan, and detail sheet(s) for the proposed water system.

Scale - Be consistent, and indicate your scale on each sheet using a bar symbol (for plan reproduction integrity). Drawings are to be at a scale of 1"=10', 1"=20', or 1"=30' for combined utility plans. Drawings at 1"=40' or 1"=50' scale shall show utility plans on separate sheets. Architectural scales for utility drawings will not be accepted. If the scale results in more than three pages of plan sheets, a cover sheet showing the entire project site (at a smaller scale) shall be provided.

North Arrow - Include on all plan view drawings. Where possible, north arrow shall face up and/or to the right hand side of plan sheet.

Datum - Show both horizontal NAD-83 (NSRS 2007) and vertical (NAVD 88) control points.

Vicinity Map - Include on the plan for each utility. The vicinity map covers the project site and surrounding streets and property within a minimum of 600' of the site. Copies of a city map can be made from the Street Atlas in the Self Help area of the Permit Center.

Drawing Quality - The drawing should be easy to read, with all lines and letters dark enough to provide good contrast with the paper.

Drafting Media - Plans sheets shall be on 24"x 36"or 22" x 34" Mylar, matte on both sides.

Drafting Standards - Plotting shall be on Mylar with a non-smudging, ink or ink-like media. Pencil drawings (including corrections or alterations) will not be accepted.

Drafting Standards/Symbols shall conform to Washington State APWA Chapter CAD Standards. See Appendix W-2. Lettering shall be done with "Leroy-style" font (SIMPLEX font if using AutoCAD).

Text identifying existing features shall be 0.08" in height (Leroy 80 template).

Text identifying street names shall be 0.24" in height (Leroy 240 template).

Text for instructions and call outs for proposed facilities shall be 0.12" in height (Leroy 120 template).

On plans with more than one sheet, stationing shall proceed from left to right or from bottom to top.

Upon approval for construction, final plan shall be provided in digital format for as-builting and permanent record. The digital format shall be AutoCAD tm (latest release) ".DWG" files on CD-ROM. The AutoCAD tm files shall include all plans, profiles, notes, and details of the water improvements.

Making Copies of Plans - Blueline or blackline prints and photocopies are acceptable. Brownline prints and microfilm copies of plans will not be accepted.

Type of Paper for Plan Copies - Blueprint quality or standard drafting paper. Tissue paper, graph paper, poster board, cardboard, and similar materials will not be accepted.

W2-04.3 Water General Plan Notes

The following is a listing of General Notes that should be incorporated on the first water plan sheet. All the notes on the list may not pertain to every project. The Developer should include only those notes that are relevant to the project and may omit non-relevant notes. However, do not renumber the remaining General Notes. If additional notes are needed for specific aspects, they should be added after the General Notes.

Water General Notes:

1. All work shall conform to the 2013 City of Bellevue Utility Engineering Standards and the Developer Extension Agreement.

2. All pipe shall be ductile iron class 52 unless otherwise shown.

3. All pipe and fittings not to be disinfected in place shall be swabbed with 1% available chlorine solution prior to installation.

4. The new water main shall be connected to the existing system only after new main is pressure tested, flushed, disinfected and satisfactory bacteriological sample results are obtained and received by the City Inspector. See Standard Detail W-9.

5. After disinfecting the water main, dispose of chlorinated water by discharging to the nearest operating sanitary sewer.

6. water main shut-off shall be coordinated with the Water Operations Division for preferred timing during flow control conditions. Water main shut-offs shall not be scheduled to take place on Fridays, or on the five days before nor one day after a City holiday, unless otherwise approved by the Utility.

7. The locations of all existing utilities shown hereon have been established by field survey or obtained from available records and should therefore be considered approximate only and not necessarily complete. It is the sole responsibility of the contractor to independently verify the accuracy of all utility locations shown, and to further discover and avoid any other utilities not shown hereon which may be affected by the implementation of this plan.

8. Deflect the water main above or below existing utilities as required to maintain 3 ft. minimum cover and 12 inch minimum vertical clearance between utilities unless otherwise specified.

9. Wrap all ductile iron pipe and adjacent valves and fittings with 8-mil. polyethylene conforming to AWWA C105.

10. The water main shall be installed only after the roadway subgrade is backfilled, graded and compacted in cut and fill areas.

11. Trench backfill and surface restoration of existing asphalt pavement shall be as required by the right-of-way use permit.

12. All fittings shall be blocked per Standard Details unless otherwise specified.

13. All services shall be 1" x 1" per Standard Details unless otherwise specified. Adaptors for 3/4” meters shall be used where applicable.

14. When working with asbestos cement pipe, the Contractor is required to maintain workers' exposure to asbestos material at or below the limit prescribed in WAC 296-62-07705.

15. Call 1-800-424-5555, or 811, 72 hours before construction for utility locations.

16. Uniform plumbing code requires the installation of privately owned and operated pressure reducing valves where the operating pressure exceeds 80 psi.

17. The Contractor shall use a vacuum street sweeper to remove dust and debris from pavement areas as directed by the Engineer. Flushing of streets shall not be permitted without prior City approval.

18. Before commencement of trenching, the Contractor shall provide catch basin inserts for all catch basins that will receive runoff from the project site. The Contractor shall periodically inspect the condition of all inserts and replace as necessary.

19. Abandonment of existing water services shall be accomplished as follows:

    a. Remove existing service saddle from water main and replace with new stainless steel repair band, Romac SS2, Ford Service Saddle FC101, or approved equal (will not be required when water main is to be abandoned).

    b. Remove and dispose of existing setter and meter box.

    c. Cap or crimp (if copper) existing service line to be abandoned in place, each end.

    d. Return existing meter to City of Bellevue Utilities Inspector.

20. Where new utility line crosses below an existing AC main, the AC pipe shall be replaced with DI pipe to 3 feet past each side of the trench as shown on Standard Detail W-8. Wrap DI pipe and couplings with 8-mil polyethylene conforming to AWWA C105. Alternatively, where directed by the Engineer, the trench shall be backfilled with controlled density fill (CDF, aka flowable fill) from bottom of trench to the invert of the AC main.

21. Avoid crossing water or sewer mains at highly acute angles. The smallest angle measure between utilities should be 45 to 90 degrees.

22. Where water main crosses above or below sanitary sewer, one full length of water pipe shall be centered for maximum joint separation.

23. At points where existing thrust blocking is found, minimum clearance between the concrete blocking and other buried utilities or structures shall be 5 feet.

24. Workers must follow confined space regulations and procedures when entering or doing work in COB owned confined spaces. Completed Permit must be given to the Utilities inspector prior to entry.

25. Manholes, catch basins and vaults are considered to be permit-required confined spaces. Entry into these spaces shall be in accordance with Chapter 296-809 WAC.

26. When work is to occur in easements, the Contractor shall notify the easement grantor and Bellevue Utilities in writing a minimum of 48 hours in advance of beginning work (not including weekends or holidays). Failure to notify grantor and Bellevue Utilities will result in a Stop Work Order being posted until the matter is resolved to the satisfaction of Bellevue Utilities. A written release from the easement grantor shall be furnished to the Utilities Inspector prior to permit sign-off.

27. The Contractor shall restore the Right-of-Way and existing public utility easement(s) after construction to a condition equal or better than condition prior to entry. Contractor shall furnish a signed release from all affected property owners after restoration has been completed.

W2-05 AS-BUILT DOCUMENTATION

W2-05.1 General Standards

For all water projects the Developer or City Department responsible for the project shall provide as-built plans at completion of the project.

As-built plans shall be based on field survey information. All survey work shall be performed under the supervision of a Professional Land Surveyor registered in the State of Washington. The surveyed as-built shall contain the following information submitted in both electronic (AutoCAD) format and on a Mylar plan stamped and signed by the surveyor. Horizontal locations shall be recorded to within one tenth (0.1’) of a foot. Rim and invert elevations shall be recorded to within one one-hundredth (0.01’) of a foot. Use *Washington Coordinate System NAD-83 (NSRS 2007) – North Zone* as the basis of bearings for all surveys. Prepare survey according to City of Bellevue NAVD 1988 vertical datum and state that it was the datum used.

All pipe lengths and dimensions are based on horizontal distances, unless slope is too steep to measure horizontal distance, inspector should note that length is “slope distance”.

References/dimensions from right-of-way centerline for utility features in the public right-of-way, or from property line for utility features located within easements.

As-built information shall be recorded on plan and profile views of the contract drawings. The profile view shall note any changes from the design finished grade over each pipe line.

As-built plans shall be submitted to Bellevue Utilities using the approved plan set as the basis for the redlined as-built plans. An as-built plan set in digital format shall also be submitted. The digital format shall be in the most current AutoCAD Release in use by the City. The ".DWG" file(s) shall be submitted on CD ROM.

W2-05.2 Required Information

Mains: Length (center of fitting to center of fitting), diameter, material, zone, class of pipe, type of joint restraint (if any), depth if greater than 5 feet or less than 3 feet, name of pipe manufacturer, note "private" and "fireline", if applicable.

Fittings: Call-outs in order, # of each, diameter, fitting, joint type (e.g. 2 – 8" 45° bend, M.J.).

Services: Size, show location on plan.

Hydrants: Distance from valve to hydrant, depth of bury (e.g., 5' bury).

END OF CHAPTER W2

CHAPTER W3 - WATER PLANNING/DESIGN STANDARDS

TABLE OF CONTENTS

W3-01 PLANNING CRITERIA ..... W3 - 1

W3-02 GENERAL DESIGN STANDARDS ..... W3 - 2

W3-03 VALVING ..... W3 - 4

W3-04 FIRE HYDRANTS ..... W3 - 5

W3-05 PIPE CLASS / PROTECTION / COVER ..... W3 - 6

W3-06 CLEARANCES / OTHER UTILITIES ..... W3 - 7

W3-07 SLOPES ..... W3 - 8

W3-08 CONNECTIONS TO EXISTING SYSTEM ..... W3 - 9

W3-09 EASEMENTS ..... W3 - 10

W3-10 SERVICES ..... W3 - 11

W3-11 BACKFLOW PREVENTION ..... W3 - 12

W3-12 LANDSCAPE WATER BUDGETING REQUIREMENTS ..... W3 - 13

W3-13 IRRIGATION SYSTEM DESIGN AND PERFORMANCE REQUIREMENTS ..... W3 – 20

CHAPTER W3 - WATER PLANNING/DESIGN STANDARDS

W3-01 PLANNING CRITERIA

W3-01.1 Serve to Extreme of Property

Ensure adjacent properties can be provided water service (extend to extreme of property with adequate capacity and pressure)

W3-01.2 Demand Projections

Demand projections are taken from City of Bellevue 1992 Water Comprehensive Plan.

A. Unit Demands

Single Family	-	90 Gallons per Capita per Day (GPCD)
Multi-family	-	79 GPCD
Commercial	-	20 Gallons per Day per 250 Square Feet of Floor Area
Hotel/Motel	-	50 GPCD

B. Population Densities

2.85 people per single family unit
1.85 people per multi-family unit
1.5 people per hotel/motel room

C. Peaking Factors

Maximum Day Demand (MDD) = Average Day Demand (ADD) x 2.25
Peak Hour Demand (PHD) = Maximum Day Demand (MDD) x 1.80

W3-01.3 System Parameters

A. Water velocity in mains - velocities shall not exceed 10 feet per second during highest demand and fireflow.

B. Distribution System Pressures (Measured at Building Elevation):

Desirable	Minimum 50 psi Maximum 80 psi
Allowable	Minimum 43 psi Maximum 125 psi

Minimum 30 psi is allowed for existing systems.

Individual pressure reducing valves are required on all services when water pressure exceeds 80 psi.

C. Reservoir Replenishment - Facilities (i.e. transmission mains, pump stations) shall be sized to enable storage facilities to be refilled within 3 days after an emergency or major fire.

W3-01.4 Fireflow Requirements

. Fireflow requirements shall be as determined by either City of Bellevue or King County Fire Marshal.

A. The Utility will determine available fireflow using its computer simulated model.

B. Minimum system pressure during fireflow analysis is 20 psi at the fire location and 10 psi throughout the rest of the system.

W3-02 GENERAL DESIGN STANDARDS

A. Each fitting/valve shall have attachment type listed (e.g. FL, MJ, FL x MJ, etc.).

B. List pipe length (from center-of-fitting to center-of-fitting), size, and material along side of each pipe, e.g. 150 L.F. - 8" D.I. Pipe material can be listed in a general note in lieu of listing along each pipe.

C. Indicate type of pavement restoration required by right-of-way authority having jurisdiction (if working in existing streets).

D. Dimension existing and new main locations from right-of-way line and/or property line, or label stations and offsets.

E. Blocking
- Reference Standard Details
- At vertical bends, pipe shall be restrained a minimum of 36 feet (2 joints) from each side of bend. Reduced-size concrete blocks shall be installed at bends per Standard Detail W-2. No change

in pipe direction or diameter shall occur within 36 feet of the vertical bend. In addition, bends, tees, reducers, etc., beyond the 36-foot limit, shall be restrained with standard blocking per Standard Detail W-1 and W-3. Where these criteria cannot be met, plans should call for vertical blocking without joint restraint per Standard Detail W-3, or a restraint method should be designed and detailed on the plan.

- Check if special blocking or joint restraint designs are necessary (e.g. poor soil, conflicting utility, etc.).

- Show all blocking on any detail drawing that shows vertical bends.

- See Appendix W-4 - Approved Materials List for joint restraint methods, other than concrete blocking.

F. Check if system may require additional looping (i.e. eliminate dead end lines).

G. To assure compatibility with existing system, check with Utility Development Division to determine hydraulic gradients.

H. Drawings shall reference distance to nearest existing valve and/or hydrant from new point of connection to existing water main.

I. Check with local jurisdiction for necessary permitting requirements.

J. Provide temporary 2" blow off assemblies for testing and disinfection of new water mains (where hydrants are not available). Place blow-off at high end of line, where possible.

K. Cap end of existing water lines to be abandoned as follows:

- Asbestos cement lines: use end cap coupling.

- Cast or ductile iron lines: use MJ cap or plug.

L. Minimum water main size

- 8" minimum when serving fire hydrants.

- 6" minimum may be used in localized conditions where fire hydrants are served by looped lines, subject to Utility approval.

- 4" minimum shall be used to serve water to end of cul-de-sac when no future extension is required.

M. Pressure reducing station plans should show location of pressure relief discharge pipe and discharge point of floor drain piping (drain to daylight). Pressure relief discharge pipe shall be shown at a location that will not be subject to damage or erosion during discharge of water.

N. All water vaults (water service, backflow assembly, pressure reducing station, etc.) shall include designs for floor drain piping draining to daylight, or, if daylight is not feasible, to the storm system. Discharge point of vault floor drains shall be shown on the plan. Where vault floor drain cannot drain to daylight or the storm system, consult with the City during project design review to determine the best alternative.

Exception: Outside-installed Reduced Pressure Backflow Assemblies (RBPA) shall be installed in above ground enclosures. The following drain requirements shall apply to enclosures. RPBA shall not be installed in vaults. Each enclosure design shall be as approved by the City. Floor drains for RPBA shall not connect to closed storm drain systems. All RPBA enclosures shall be provided with a bore sighted daylight drain. This bore sighted drain to daylight shall be clearly visible end to end, sized to meet the flow requirements of the RPBA relief vent.

O. Placement of surface appurtenances (manhole lids, water valve lids, etc.) in tire track of traffic lanes shall be avoided whenever possible. Meter vaults shall be located outside the sidewalk whenever possible.

P. Service connections or water utility distribution system piping shall not be used for grounding of electrical systems or for the maintenance, integrity or continuity of any grounding attachment or connection.

Q. Manufacturer’s certification of testing and accuracy shall be provided for all commercial meter installations.

W3-03 VALVING

A. 600' maximum distance between valves on distribution mains, except, in the Central Business District (CBD), maximum valve spacing shall be 200'.

B. Provide a valve at each end of an easement.

C. At water main intersections, valves shall be placed on 4 out of 4 legs at each cross, and 3 out of 3 legs at each tee (unless tapping an existing water main).

D. For all fire service connections greater than 3 inches in diameter, isolation valves shall be installed on all legs of the tee. Tapping Tees are not allowed for fire service connections greater than 2 inches in diameter.

E. For all domestic water service connections greater than 2 inches in diameter, isolation valves shall be installed on all legs of the tee. Tapping Tees are not to be used for domestic service connections greater than 2 inches in diameter.

F. Additional valving may be required for area isolation.

G. Air/vacuum relief valves shall be installed at local high points in the water main.

W3-04 FIRE HYDRANTS

The following information is provided as a guideline to be used during design. The final number of hydrants and their location shall be approved by the City of Bellevue or King County Fire Marshal.

A. Guard posts are to be used only in parking lots when no curbs are present or in exposed areas in parking lots.

B. Fireline/hydrant run over 50' in length must be 8" (terminate with tee, plug and hydrant assembly).

C. Fire hydrant location:

Single-family residential:	Spacing = 500' apart. Coverage =250' from front property line of the main body of a lot.
Multi-family/commercial:	As determined by the fire marshal.
Exceptions:	On arterial streets without residential access (through traffic only), maximum hydrant spacing shall be 1000'. On dead-end streets, reduce single-family residential spacing to be 400’ apart.

D. 3' minimum clearance shall be provided around outside of hydrant for operation. Provide 5’ horizontal clearance from the outside of the hydrant to concrete walls, structures, utility poles and above grade electrical enclosures.

E. Where feasible, fire hydrants shall be installed on the same side of the street as the water main.

F. Private Fire Hydrants:

When a fire hydrant is to be installed on commercial, multi-family and institutional property, outside of the right-of-way or designated public water utility easements, and the fire hydrant is intended to provide fire protection for only that property, the fire hydrant and the water line serving the fire hydrant shall be privately owned and maintained by the benefiting property owner. Such water line and fire hydrant are considered to be part of the benefiting property's fire protection system and shall be designated on the approved construction drawings and the Utility's as-built drawings as "PRIVATE" or "PVT".

The private water line that serves the private fire hydrant and/or the fire sprinkler system shall be owned by the benefitting property owner beginning immediately downstream of the valve where the private water line connects to the public water main.

The private fire hydrant and private water line (fire protection system) shall be designed and constructed in accordance with the fire hydrant and water main standards set forth in the Utilities Engineering Standards. No domestic, irrigation or industrial water services shall be connected to the fire protection system.

The benefiting property owner shall have responsibility for all maintenance, repair, annual testing and flushing of the fire protection system in accordance with the fire system maintenance standards set forth by the Fire Department. At the time of permit issuance, the property owner/applicant shall execute a Private Fire Hydrant System Indemnification and Hold Harmless Agreement acknowledging that the property owner/applicant shall be responsible for the proper maintenance and repair of the fire protection system.

If the fire protection system is contributing to a water quality issue, the property owner/applicant may be required to conduct more frequent flushing of the fire protection system or install a backflow assembly, at the discretion of the Utility.

W3-05 PIPE CLASS / PROTECTION / COVER

A. Pipe shall be ductile iron, class 52.

B. Ductile iron pipe shall be encased in a steel or ductile iron casing when crossing under improvements where the ability to remove and replace pipe without disturbance to the improvement is needed. Casings are required when:

- Crossing under rockeries over 4' high.
- Crossing under retaining wall footings over 4' wide.
- Crossing under reinforced earth retaining walls (both wall and reinforcing

material).

Casings shall extend a minimum of 5' past each edge of the improvement, or a distance equal to the depth of pipe whichever is greater. The carrier pipe shall be supported by casing spacers, where casing length exceeds 10'.

Minimum clearance between bottom of rockery and top of pipe or casing shall be 2'. The trench shall be backfilled with crushed rock.

C. water main depth of cover:

- 3' minimum from final grade (see exception in W3-05.D. below)
- 6' maximum from final grade

D. Building setback requirements:

- 5' minimum from covered parking to water main.

- 10' minimum from building (and retaining walls) to water main.

- 20' minimum easement shall be provided between buildings.

- When passing between buildings which are 25' apart or less, ductile iron pipe shall be installed with 2' of pipe cover (5' beyond the limits of each building).

E. All ductile iron pipe and adjacent fittings shall be encased in 8-mil polyethylene per AWWA C105.

F. All pipe, fittings and hardware immersed inside water reservoirs shall be stainless steel.

W3-06 CLEARANCES / OTHER UTILITIES

A. All clearances listed below are from edge-to-edge of each pipe.

B. Water services and sewer stubs shall have at least 5' horizontal separation.

C. Check for crossing or parallel utilities. Maintain minimum vertical and horizontal clearances. Avoid crossing at highly acute angles (smallest angle measure between utilities should be between 45 and 90 degrees).

D. At points where thrust blocking is required, minimum clearance between the concrete blocking and other buried utilities or structures shall be 5'.

E. Horizontal clearances from water main:

Cable TV	5'
Gas	5'
Power	5'
Storm	5'
Sanitary	10'
Telephone, Fiber Optics	5’

F. Vertical clearances from water main:

Cable TV	1'
Gas	1'
Power	1'
Storm	1'
Sanitary	2'
Telephone, Fiber Optics	1'

G. Where water main crosses above or below sanitary sewer, one full length of water pipe shall be used with the pipes centered for maximum joint separation. Washington Department of Ecology criteria will also apply.

H. Send letter and preliminary plan to existing utilities to inform them of new construction. Request as-built information and incorporate into plans. At minimum the following utilities should be contacted:

Cable Television
Natural Gas
Power
Sanitary Sewer
Storm Drainage
Telephone, Fiber Optics

I. Draft plans shall be sent to the above listed utilities to allow coordination of projects.

J. Seattle Public Utilities Transmission Pipelines: See Appendix W-5, Water Works Reference Standards; *Standards for Utilities Installed in Proximity of Seattle Public Utilities Transmission Pipelines.*

W3-07 SLOPES

A. Vertical bends shall be used when joint deflection would exceed one-half of pipe manufacturer’s recommended maximum deflection.

B. Pipe joints shall be restrained where slopes are 20% or greater. Joint restraint on slopes shall be Megalug restrainer for mechanical joint fittings and tie rod/retainer

clamp assemblies for DI push on joints, or other methods from approved materials list.

Anchor blocks per Standard Detail shall be used in conjunction with joint restraint where slopes are 20% or greater.

C. Timber baffle/hill holders shall be required on unpaved slopes that exceed 20%, minimum spacing shall be 20' on center.

W3-08 CONNECTIONS TO EXISTING SYSTEM

A. When authorized by the Utility, water mains shall be tapped using stainless steel, full-bodied cast iron Mueller-type tapping tee, or ductile iron mechanical joint tapping tees with outlet flange.

B. Connections to existing mains 8" and larger shall be via a cut-in tee unless otherwise approved by the Utility. If a wet tap is authorized, it shall be a minimum of one pipe size smaller than the existing main.

C. Size-on-size tapping tees are not allowed, unless a shell cutter, one size smaller than the existing water main, is used.

D. Connections to existing mains smaller than 8" diameter shall be made by cutting in a tee, unless otherwise approved by the Utility.

E. Where cut-in connection is made for all commercial, multifamily, institutional and school connections, always install two (2) in-line gate valves.

F. In the Central Business District (CBD), 3", 4" and 6" domestic service and fire sprinkler lines shall connect to the existing water main with 8" pipe and 8” gate valve sizes. Extend 8" pipe from water main to vault before reducing to service/fire line size. No Tapping Tees or sleeves are allowed.

G. Any property owner who plans to demolish or remove any structure connected to the public water system shall notify the Utility and complete a Utility Abandonment form prior to the commencement of such work. The Utility will determine whether the water service can be reused (if sufficiently sized for the new use). If the Utility determines that the water service cannot be reused, the property owner must pay for abandonment or upgrade of the water service through a water service application or through a water system extension agreement for new site improvements. (Ord. 4751 3, 1995)

H. Do not connect water system to private sewer pump stations.

W3-09 EASEMENTS

A. Show easements on plans and identify width.

B. Show easements on all private property. If easement is defined as a constant width on each side of water main, then show a segment of the easement and label as "Typical" (typ).

C. All easements shall be a minimum of 15 feet in width, unless otherwise approved or required by the Utility.

D. A 20 foot minimum easement shall be provided between buildings.

E. Also see Section W3-05.D, "Building Setback Requirements".

F. Easement Documentation Requirements:

All easements shall be shown on the project plans and identified as "private" or "public", together with the width dimension and utility use, e.g. *20' Public Water Utility Easement.*

All documents for public easements shall conform to these Utilities Engineering Standards, will be provided on the City's easement template and shall comply with King County Recorder's Office formatting requirements. Include the King County tax parcel number(s), site address, owner names and site legal description. All pages must be numbered. Sheets shall be 8-1/2" by 11" or 8-1/2" by 14". Margins and font size must conform to King County recording format requirements.

Easements shall be dedicated to and approved by the City prior to acceptance of a public utility system. The Grantee shall be the "CITY OF BELLEVUE, a Washington municipal corporation, its heirs, successors and assigns". The City may require indemnification agreements to hold the City harmless where maintenance access across private property is deemed necessary.

The description contained within the easement document shall be prepared and stamped by a land surveyor licensed in the State of Washington. The description shall be identified as an Exhibit, together with the title of the utility use, e.g. *Permanent Public Water Utility Easement*. The description shall be clearly written and referenced to the underlying property. The description shall be accompanied by an additional graphic Exhibit which depicts a scaled drawing of the easement location relative to the subject parcel.

Off-site easements shall be delivered to the Utility prior to issuing a Notification to Proceed with construction. Submittal of on-site easements may be delayed until completion of construction improvements.
Bills of Sale for all utility facilities appurtenant to public easements or tracts shall be given to the City.

W3-10 SERVICES

A. Minimum allowable service size shall be 1" x 1". Check that minimum pressure can be maintained when service is flowing at anticipated maximum levels. If friction losses will cause pressure at building to drop below minimum, increase service line size as necessary to raise pressure.

B. Show location of water services on plan and indicate size. Sizes shall be determined by the Developer per the Uniform Plumbing Code. **Minimum service size for all commercial and multi-family customers is 1" x 1".**

C. Firelines and Irrigation shall be by separate water main connection and service. Single Family domestic services are not required to have separate water main connections.

D. Static service pressures at ground floor elevation shall be determined at all lots/buildings to ensure compliance with system pressure standards.

E. Plan shall identify lots/buildings where builder/owner should install individual pressure reducing valves. Required on customer side of service lines (after water meter box) when service pressures exceed 80 psi.

F. 3" through 8" service installations shall include full-size bypass per Standard Details.

G. For commercial and multi-family customers, domestic services, 1 1/2" and larger, that connect to an existing water main with a cut-in tee, shall include a gate valve on <u>each</u> leg of the tee. If the building is served by a second full-size service that can remain in service while the water main supplying the other service is shut down, only one mainline and one branch-line valve will be required with the cut-in tee connection.

H. All new mixed-use buildings shall have separate meters for the multi-family portion and the commercial portion of the building.

I. If a customer needs a larger size service, the customer is responsible for up size and abandonment of existing connection.

W3-11 BACKFLOW PREVENTION

Per City Code 24.02.190, irrigation systems, fire sprinkler systems, and other water uses which may or will cause the contamination of the potable water supply by backflow, shall be required to install approved backflow prevention assemblies, and/or otherwise meet the requirements of the WAC 246-290-490 "Cross Connection Control Regulation in Washington State", and the recommendations of the PNWS-AWWA Cross Connection Control Manual, latest edition. Requirements may include premise isolation, point of use protection, or a combination. All backflow prevention assemblies installed shall be on the Washington State DOH list of approved backflow prevention assemblies, most recent edition at the time of installation, and shall be installed as approved by Washington State Dept. of Health and as shown in the Standard Details.

Reduced Pressure Principle Backflow Assembly (RPBA) installations that differ from the Standard Details W-46, W-47 and W-48 must be approved by the Cross Connection Program Administrator (425-452-5208), and will be reviewed on a case-by case basis to ensure current minimum requirements for installation and freeze protection are met.

Satisfactory testing shall be completed upon installation, repair, or relocation of all backflow assemblies, and annually thereafter. A completed test report must be submitted to the Utility or Plumbing Inspector of record prior to final acceptance.

Fire sprinkler system connections to the City's water system shall be owned and maintained by the property owner, beginning immediately downstream of the gate valve where the system connects to the City's water main.

The backflow prevention assembly on fire system connections shall be located as close to the serving water main as possible, no more than 50 feet from the water main without prior City approval, either on the owner's property or an easement dedicated to the owner's property. A Double Check Detector Assembly is required on all fire lines, other than privately owned fire hydrants, that are 3" and larger (applies to both interior and outside assemblies).

Interior backflow prevention, when permitted, must meet the Uniform Plumbing Code requirements as administered by the Building Division, and must also meet the requirements of the Bellevue Utilities Department.

Multi-family and mixed use projects that require backflow protection are strongly recommended to provide a bypass with equal backflow prevention to avoid loss of service during maintenance and repair.

Premise isolation at the water meter by an approved air gap or a reduced pressure backflow assembly is required for all sites utilizing an auxiliary supply (i.e. on-site well, pond, lake-front home, etc.) regardless of whether or not there is a cross-connection between the auxiliary and potable water system.

All multiple use buildings are required to have a Reduced Pressure Backflow Assembly for premise

isolation.

W3-12 LANDSCAPE WATER BUDGETING REQUIREMENTS

As required by Bellevue City Code, section 24.02.205 (Water Code), new or redeveloped landscapes shall comply with the following Landscape Water Budgeting Requirements methodology.

W3-12.1 General Irrigation Water Budgeting Information:

A. Landscape Water Budgeting is a two step process: First, the maximum amount of irrigation water the landscape can be designed to use must be determined. This is called the Irrigation Water Budget (IWB). Second, the total amount of irrigation water needed to sustain the landscape design must be estimated. This is called the Total Estimated Water Use (TEWU). The landscape design's TEWU may not exceed its IWB.

B. The IWB must be reported on the Utilities Department's "Irrigation Water Budget Form". The TEWU must be reported on the "Total Estimated Water Use Form". These two forms, together with a copy of the landscape's design/plans and a "Water Efficient Landscape Design Certification" must be submitted to, and approved by, the Utility prior to installation of the landscape.

W3-12.2 Determining the Landscape's Irrigation Water Budget & Total Estimated Water Use

A. A landscape design's IWB shall be calculated based upon the total square footage of the proposed landscape area, excluding retained native vegetation areas and impervious surfaces, using the following formula:

$$IWB = ET \times AF \times LA \times CF$$

IWB: Irrigation Water Budget allowed.

ET: Evapotranspiration Rate of 14.49 inches (per irrigation season, see Section W3-12.3).

AF: Adjustment Factor of 0.8 (0.5/0.625 irrigation efficient).

LA: Landscape Area in square feet.

CF: Conversion Factor of 0.62 (inches to gallons per square foot).

B. A landscape design's TEWU shall be calculated by determining the Estimated Water Use (EWU) for each hydrozone (reference Irrigation System Design requirements, Section I), and adding the EWU for all landscape hydrozones

together. The sum of the EWU for all hydrozones is the landscape's TEWU. The following formula shall be used to determine the EWU for each hydrozone:

$$EWU = (ET \times PF \times HA \times CF) / IE$$

EWU: Estimated Water Use (for each hydrozone)

ET: Evapotranspiration Rate of 14.49 inches (per irrigation season, see Section W3-12.3).

PF: Plant Factor value for hydrozone (see Section W3-12.4).

HA: Hydrozone Area in square feet.

CF: Conversion Factor of 0.62 (inches to gallons per square foot).

IE: Irrigation Efficiency value for hydrozone (see Section W3-12.5).

W3-12.3 Evapotranspiration Data For The Puget Sound Lowlands Region

Landscape design's IWB, TEWU, and hydrozone EWU shall be based upon the following evapotranspiration (ET) data which represents historical monthly net irrigation requirements for turf grass typically used in commercial landscapes. The ET data is in inches per month for the Puget Sound Lowlands Region, and is based upon the 30 year average of National Weather Service data:

Jan	Feb	Mar	Apr	May	Jun	Jul	Aug	Sep	Oct	Nov	Dec	Total
.00	.00	.00	.00	1.59	3.13	4.46	3.51	1.77	.03	.00	.00	14.49

W3-12.4 Plant Factor Values For Hydrozone EWU Calculations

PF values represent the percentage of ET demand a particular plant species, or hydrozone, has in comparison to turf grass. In other words, if a particular plant species has only one-half the water demand per square foot that turf grass does, it would be assigned a PF value of 0.5.

A. The PF values in Section W3-12.4.B. shall be used for all plant species selected for use in a landscape. The landscape designer shall, based upon professional experience, assign a PF value to each plant species designed within a hydrozone. The PF for the hydrozone shall be that of the plant species with the highest PF within the hydrozone, accounting for:

1. Each plant species' typical water needs in an appropriate planting (i.e.: a plant which is best suited to sandy soils with partial shade and well suited to the

Puget Sound climate, and is in fact designed/planted in partial shade and sandy soil (appropriate plant placement) would typically be either a (select one) low, medium, or high water use plant).

2. Conditions which may decrease or increase a plants water needs, such as improper exposure, soil conditions, density of planting, adaptability to area's climate, etc.

B. Plant Factor Chart

Plant Factor values assigned shall reflect the plant species actual water demand as planted according to the final landscape design/plan.

EXAMPLE: A hardy rhododendron planted in a near native state (shade to partial shade, with rich, moist soils) could be assigned a PF of between 0.0 to 0.3. However, the same plant, if planted in poor soils, with full exposure to sun in the middle of a parking lot, should likely be assigned a PF between 0.7 and 1.0.

BASIC PLANT FACTOR CLASS	**PF RANGE**
Low water use plants	0.0 to 0.3
Medium water use plants	0.4 to 0.6
High water use plants	0.7 to 1.0
All irrigated turf grass	0.8 to 1.0

W3-12.5 Irrigation System Efficiency Values

Irrigation system efficiency values shall be assigned as follows in calculating the Estimated Water Use for each hydrozone of a landscape:

Type of Irrigation System Used in Hydrozone	**Efficiency Value**
Conventional Overhead Spray System: (i.e.: rotors and pop-up spray systems; most commonly used to irrigate turf, but also used in plant beds)	0.625
Low Volume or Drip Irrigation System: (i.e.: micro-spray, bubbler, drip, or other low volume systems which apply water below the ground surface, or directly to the plants root zone; most commonly used	0.925

in plant beds)

W3-12.6 Landscape Water Budgeting Certification & Forms

The "Water Efficient Landscape Design Certification", "Irrigation Water Budget Form", and "Total Estimated Water Use Form" on the following pages shall be used in calculating and reporting the landscape's IWB, TEWU, and EWU, and to certify that the landscape has been designed in compliance with the requirements of Bellevue City Code 24.02.205 and these Engineering Standards.

WATER EFFICIENT LANDSCAPE DESIGN CERTIFICATION

Project Name: _____

Project Address: _____

Project Owner or Manager _____
(Company Name)

_____
(Contact Name)

_____
(Street Address)

_____
(City, State, Zip)

_____
(Phone)

Landscape Design Contact _____
(Company Name)

_____
(Contact Name)

_____
(Street Address)

_____
(City, State, Zip)

_____
(Phone)

The landscape design/plans for the above stated project have been verified by the Washington State registered Landscape Architect, Washington Certified Nurseryman, or Washington Certified Landscaper stated above to be in compliance with Bellevue City Code 24.02.205 "Landscape Water Budgeting Requirements" (Water Code). All data, calculations, and information required is attached, or shown on the face of the landscape plans.

_____ _____
(Landscape Designer's Signature) (Approval Signature)

_____ _____
(Printed Name) (Date) Bellevue Utilities Department (Date)

IRRIGATION WATER BUDGET FORM

Project Name: _____

Project Address: _____

IWB Formula: IWB = ET x AF x LA x CF

IWB:	Irrigation Water Budget
ET:	Evapotranspiration Rate (14.49")
AF:	Adjustment Factor (0.8)
LA:	Landscape Area (Square Feet)
CF:	Conversion Factor (0.62)

IWB Formula in Simplest Terms: IWB = 7.18704 x LA

Landscape Area: _____ Square Feet x 7.18704 =

IRRIGATION WATER BUDGET: _____ GALLONS

TOTAL ESTIMATED WATER USE: _____ GALLONS

Enter Total Estimated Water Use from Estimated Water Use Form. Total Estimated Water Use Form must accompany Irrigation Water Budget Form. Total Estimated Water use may not exceed Irrigation Water Budget.

TOTAL ESTIMATED WATER USE FORM

Project Name: _____

Project Address: _____

EWU Formula: EWU = ET x PF x HA x CF / IE

EWU: Estimated Water use (per hydrozone)
ET: Evapotranspiration Rate (14.49")
PF: Plant Factor (as determined for hydrozone)
HA: Hydrozone Area (in Square Feet)
CF: Conversion Factor (0.62)
IE: Irrigation Efficiency (Either 0.625 or 0.925)

EWU Formula in Simplest Terms When IE = 0.625: EWU = 14.374 x PF x HA

EWU Formula in Simplest Terms When IE = 0.925: EWU = 9.712 x PF x HA

Hydrozone	HA in Square Feet	Hydrozone Average PF	Hydrozone Irr. Eff.14.374 OR 9.712		EWU
				=	
				=	
				=	
				=	
				=	
				=	
				=	
				=	
				=	
TOTAL SF:			TOTAL EWU:		

(Attach additional forms if necessary)

W3-13 IRRIGATION SYSTEM DESIGN AND PERFORMANCE REQUIREMENTS

The requirements of this section shall apply to all proposed new or re-developed irrigation systems that will be connected to the public water system, except that the requirements do not apply to the following:

A. Single family residences; provided, that community area landscaping installed by the developer is not exempt.

B. Any project with a total landscaped area of less than 500 square feet. If a project is phased, the total landscape area includes all phases.

W3-13.1 General Irrigation System Design Requirements Information

A. Irrigation systems shall be designed and constructed in such a manner that separate hydrozones within the landscape can be irrigated according to the individual watering needs of the hydrozone. Hydrozones are groupings of plant species used in the landscape which have similar irrigation watering needs (reference "Landscape Water Budgeting Requirements" Section W3-12.2.B and W3-12.4.A & B). Hydrozones of turf grass shall always be irrigated separately from other landscape hydrozones.

B. Irrigation systems shall be designed and constructed in such a manner that a minimum average distribution uniformity of 0.625 is achieved.

1. Irrigation system shall be designed by a State-registered landscape architect, State licensed professional engineer, or Irrigation Association certified irrigation designer (IACID).

C. Copies of the landscapes and irrigation systems designs/plans, together with a "Water Efficient Irrigation System Design Certification", must be submitted to, and approved by, the Utility prior to construction of the irrigation system.

D. Installed irrigation systems must successfully pass an irrigation system audit verifying a minimum average distribution uniformity of 0.625, and an "Irrigation System Design Certification", must be submitted to, and approved by, the Utility prior to construction of the irrigation system.

1. Audit shall be by an Irrigation Association certified landscape irrigation auditor (IACLIA).

When conducting audits to determine an irrigation system's average distribution uniformity, conventional overhead irrigation zones shall be physically audited in determining their distribution uniformity; low volume zones such as drip systems, etc. may be assigned an assumed distribution uniformity of 0.925.

E. Location Restrictions:

1. Only low volume irrigation systems may be installed in landscape strips less than five feet wide or in any parking lot landscape.

2. Irrigation systems shall not be installed in turf strips less than five feet wide; in areas of turf where slopes exceed 3:1; in landscape berms exceeding a slope of 1:1; or in turf areas in right-of-way medians, curb strips or parking lots, with the exception that in right-of-way medians and curb strips, up to five percent of the landscape may be irrigated turf so long as all other requirements are met and the turf provides a functional use for pedestrians.

W3-13.2 Irrigation System Design, Operation & Performance Requirements

A. Irrigation systems shall be designed with provisions for winterization by providing either:

1. Manual drains (automatic valves are not permitted) at all low points, or

2. Means to blow out irrigation system pipes with pressurized air.

B. Irrigation systems shall be designed to avoid runoff, low-head drainage, overspray, or other similar conditions where irrigation water flows onto adjacent property, non-irrigated areas, or impervious surfaces by:

1. Considering soil type infiltration rates.

2. Using proper irrigation equipment and schedules, including such features as repeat cycles and matched application and infiltration rates, and

3. Considering special problems posed by irrigation on slopes, in median strips, and in narrow hydrozones.

C. Irrigation system shall be designed to include an automatic rain shut-off device.

D. Irrigation system designs shall include a written irrigation system management plan which includes:

1. An irrigation system operating schedule based upon the Evapotranspiration Demand Curve, the Estimated Water use for each hydrozone, and the Total Estimate Water Use for the landscape (reference “Landscape Water Budgeting” Section W3-12.3 and W3-12.4.A & B.) And which details:

a. For each hydrozone (station) the run time in minutes per cycle and

cycles per week for each week of the irrigation season (May 1st through October 31st)

b. The total weekly and annual amount of water to be applied by each hydrozone, and the total landscape, in gallons and in hundreds of cubic feet (CCF) (748 gallons = 1 CCF);

2. Additional operating criteria such as avoiding irrigation during times of high winds, when raining, and/or in the middle of the day.

3. Regular maintenance activities necessary to:

   a. Prevent, detect and repair irrigation system damage, excess wear, and leakage.

   b. Maintain a minimum average distribution uniformity of 0.625.

   c. Activate the irrigation system for use in the spring.

   d. Deactivate and winterize the irrigation system in the fall.

4. Specifications for all irrigation system components originally used, and recommended for use when making repairs to, or replacing parts of the irrigation system to maintain.

   a. A minimum average uniform irrigation efficiency of 0.625.

   b. Good overall operational performance of the irrigation system.

E. Manual watering is permitted provided it meets the intent of the irrigation system requirements and overspray is minimized.

W3-13.3 Irrigation System Design and Performance Requirements Certifications

The "Water Efficient Irrigation System Design Certification" and "Irrigation System Audit Certification" on the following pages shall be used to certify that the irrigation system has been designed and installed in compliance with the requirements of Bellevue City Code 24.02.210 and the Utilities Engineering Standards.

WATER EFFICIENT IRRIGATION SYSTEM DESIGN CERTIFICATION

Project Name: _____

Project Address: _____

Project Owner
or Manager: _____
(Company Name)
_____
(Contact Name)
_____
(Street Address)
_____
(City, State, Zip)
_____
(Phone)

Irrigation System
Design Contact: _____
(Company Name)
_____
(Contact Name)
_____
(Street Address)
_____
(City, State, Zip)
_____
(Phone)

The landscape irrigation system design/plans for the above stated project have been completed by the Washington State Registered Landscape Architect, Washington State Registered Professional Engineer, or Irrigation Association Certified Irrigation Designer stated above, and are in compliance with Bellevue City Code 24.02.210 "Irrigation System Design and Performance Requirements" (Water Code). All data, calculations, and information required is attached, or shown on the face of the irrigation system plans.

_____ _____
(Landscape Designer's Signature) (Approval Signature)

_____ Bellevue Utilities Department_____
(Printed Name) (Date) (Date)

IRRIGATION SYSTEM AUDIT CERTIFICATION

Project Name: _____

Project Address: _____

Project Owner
or Manager: _____
(Company Name)

_____
(Contact Name)

_____
(Street Address)

_____
(City, State, Zip)

_____
(Phone)

Irrigation System
Auditor Contact: _____
(Company Name)

_____
(Contact Name)

_____
(Street Address)

_____
(City, State, Zip)

_____
(Phone)

Irrigation Assoc.
Certification I.D. # _____

The landscape irrigation system for the above stated project has been audited by the Irrigation Association Certified Landscape Irrigation Auditor stated above, and is in compliance with Bellevue City Code 24.02.210 "Irrigation System Design and Performance Requirements" (Water Code). Copies of all audit data, calculations, and information are attached.

_____ _____
(Auditor's Signature) (Approval Signature)

_____ Bellevue Utilities Department _____
(Printed Name) (Date) (Date)

END OF CHAPTER W3

CHAPTER W4 - WATER MATERIALS

TABLE OF CONTENTS

W4-01 GENERAL ..... W4 - 1

W4-02 WATER PIPE ..... W4 - 1

W4-03 POLYETHYLENE ENCASEMENT ..... W4 - 1

W4-04 FITTINGS ..... W4 - 1

W4-05 GALVANIZED IRON PIPE ..... W4 - 2

W4-06 COUPLINGS ..... W4 - 2

W4-07 ADAPTERS ..... W4 - 2

W4-08 BOLTS IN PIPING ..... W4 - 2

W4-09 FLANGE GASKETS ..... W4 - 3

W4-10 GATE VALVE ..... W4 - 3

W4-11 VALVE BOX ..... W4 - 3

W4-12 VALVE OPERATING NUT EXTENSION ..... W4 - 3

W4-13 BUTTERFLY VALVE ..... W4 - 4

W4-14 CHECK VALVE ..... W4 - 4

W4-15 AIR AND VACUUM RELEASE VALVE ..... W4 - 4

W4-16 PRESSURE REDUCING STATION ..... W4 – 4

W4-17 LIDS, HATCHES AND COVERS – SLIP RESISTANCE ..... W4 - 5

W4-18 CITY-FURNISHED INDIVIDUAL PRESSURE REDUCING VALVE (RESIDENTIAL) ..... W4 - 6

W4-19 CITY-FURNISHED INDIVIDUAL PRESSURE REDUCING VALVE (MULTI-FAMILY OR COMMERCIAL) ..... W4 - 6

W4-20 FIRE HYDRANT ..... W4 – 6

W4-21 HYDRANT GUARD POSTS ..... W4 - 7

W4-22 METER SETTER ..... W4 - 7

W4-23 CORPORATION STOP ..... W4 - 7

W4-24 METER BOX..... W4 - 7

W4-25 COPPER SERVICE PIPE..... W4 - 7

W4-26 Not Used ..... W4 - 7

W4-27 PIPE INSULATION ..... W4 - 8

W4-28 CONCRETE BEDDING & BLOCKING..... W4 - 8

W4-29 JOINT RESTRAINT ..... W4 - 8

W4-30 REDUCED PRESSURE BACKFLOW ASSEMBLY ..... W4 - 9

W4-31 REDUCED PRESSURE DETECTOR ASSEMBLY..... W4 - 9

W4-32 DOUBLE CHECK VALVE ASSEMBLY ..... W4 - 9

W4-33 DOUBLE CHECK DETECTOR ASSEMBLY..... W4 - 9

W4-34 BACKFLOW ASSEMBLY RESILIENT SEATED SHUT-OFF VALVES ..... W4 - 10

W4-35 BARRIER FENCE..... W4 - 10

W4-36 BEDDING AND BACKFILL ..... W4 - 10

W4-37 STEEL CASING..... W4 - 13

W4-38 CASING SPACER..... W4 - 13

CHAPTER W4 - WATER MATERIALS

W4-01 GENERAL

All materials shall be new and undamaged. The same manufacturer of each item shall be used throughout the work.

Where reference is made to other specifications, it shall be the latest revision at the time of construction, except as noted on the plans or herein.

All materials not specifically referenced shall comply with applicable sections of ANSI, ASTM, AWWA or the APWA/WSDOT Standard Specifications.

Approved manufacturers and model numbers of various materials are listed in Appendix W-4 of these Engineering Standards. When specific manufacturers or models are listed, no substitutions will be allowed without prior approval by the Utility.

W4-02 WATER PIPE

Water pipe shall be ductile iron pipe, minimum thickness Class 52, cement-lined unless otherwise specified and shall conform to ANSI/AWWA C151/A21.51 or as shown on plans.

Rubber gasket pipe joints to be push-on-joint (Tyton) or mechanical joint (M.J.) in accordance with ANSI/AWWA C111/A21.11, unless otherwise specified.

Flanged joints shall conform to ANSI B16.1, class 125 drilling pattern, rated for 250 psi working pressure.

Standard thickness cement lining shall be in accordance with ANSI/AWWA C104/A21.4.

The Contractor shall furnish certification from the manufacturer of the pipe and gasket being supplied that the inspection and all of the specified tests have been made and the results thereof comply with the requirements of the above referenced standards.

W4-03 POLYETHYLENE ENCASEMENT

Polyethylene encasement shall be eight mil tube or sheet and shall be furnished with all ductile iron pipe unless otherwise specified. Materials shall comply with ANSI/AWWA C105/A21.5.

W4-04 FITTINGS

All water main fittings shall be ductile iron, short body, cement lined, and for pressure rating of 350 psi for mechanical joint fittings and 250 psi for flange joint fittings, unless otherwise noted. Metal

thickness and manufacturing process shall conform to applicable portions of ANSI/AWWA C110/A21.10. Mechanical joint, ductile iron, compact fittings 24 inches and less shall be in accordance with ANSI/AWWA C153/A21.53. Flanged fittings, cast or ductile iron, shall conform to ANSI B16.1, class 125 drilling pattern.

Standard cement lining shall be in accordance with ANSI/AWWA C104/A21.4.

Rubber gaskets for push-on-joints (Tyton) or mechanical joint (M.J.) shall be in accordance with ANSI/AWWA C111/A21.11.

Gasket material for flanges shall be neoprene, Buna N, chlorinated butyl, or cloth-inserted rubber.

Type of connections shall be specified as push-on joint (Tyton), mechanical joint (M.J.), plain end (P.E.), flanged (FL), and threaded.

W4-05 GALVANIZED IRON PIPE

Where galvanized iron pipe is specified, the pipe shall be standard weight, Schedule 40, steel pipe per Standard Specification for black and hot-dipped, zinc-coated (galvanized) welded and seamless steel pipe for ordinary uses (ASTM A-120). Fittings shall be screwed malleable iron galvanized per ANSI B16.3. Galvanized pipe shall be used only for dry pipe in pressure relief and air valve assemblies.

W4-06 COUPLINGS

Flexible coupling and transition coupling cast components shall be ductile iron. Center rings and end rings shall be ductile iron in accordance with ASTM 536-80, Grade 65-45-12.

Gasket material shall be virgin SBR in accordance with ASTM D2000 MBA 710.

Bolts shall be high strength, low alloy steel trackhead bolts with national course rolled thread and heavy hex nuts. Steel shall meet ANSI/AWWA C111/A21.11 composition specifications.

W4-07 ADAPTERS

All flange by mechanical joint (FL x MJ) adapters shall be ductile iron.

W4-08 BOLTS IN PIPING

Bolts shall be malleable iron, Cor-ten, or stainless steel.

Bolts and nuts for flanged pipe and fittings shall conform in size and length with ANSI/AWWA C115/A21.15. T-bolts shall be malleable iron or Cor-ten in accordance with ANSI/AWWA C111/A21.11. Stainless steel bolts shall meet the requirements of ASTM A-307, Grade A. Shackle

rods shall be stainless steel all thread 316SS.

Stainless steel nuts, bolts and washers shall be type 316SS.

W4-09 FLANGE GASKETS

Gasket Material shall be neoprene, Buna N, chlorinated butyl, or cloth inserted rubber.

W4-10 GATE VALVE

The minimum requirements for all gate valves shall, in design, material and workmanship, conform to the following Standards:

2” to 12” Cast Iron:	AWWA C-509
4” to 12” Ductile Iron:	AWWA C-515
14” to 24” Ductile Iron:	AWWA C-515
30” to 36” Ductile Iron:	AWWA C-515
42” to 48” Ductile Iron:	AWWA C-515

Buried gate valves shall be iron body, bronze mounted, resilient seat, and non-rising stem, suitable for installation with the type and class of pipe being installed. Ends to be as specified. Operating stems shall be equipped with standard two (2) inch operation nut, and O-ring stem seals. Valves not buried shall be as specified.

W4-11 VALVE BOX

Valve Box shall be cast iron, two-piece, 8" or 18" slip type top section with flange located within 3" of top, with 24" bottom section (and extension, if required), equal to RICH - Seattle Type. Valve box lid shall be cast iron, 3 2" deep, with recessed lifting handle, and the word “WATER” or “WW” cast into it.

Valve box paving risers shall be cast iron suitable for H-20 traffic loading. The riser shall have four lugs or a flange around the perimeter, and be sized to fit into a RICH - Seattle Type valve box top. Valve box adjusting sleeves (for use in unimproved areas) shall be cast iron, 12" long.

All castings shall be coated with asphaltic varnish.

W4-12 VALVE OPERATING NUT EXTENSION

Use where valves are installed more than 3' below finished grade. Extensions are to be a minimum of 1' with only one extension per valve. See Standard Detail.

W4-13 BUTTERFLY VALVE

Butterfly valves shall conform to ANSI/AWWA C504, Class 150B. Valves in chambers shall have a

manual hand wheel operation. Buried valves shall have a stem extension with AWWA 2-inch operating nut and suitable valve box.

W4-14 CHECK VALVE

Check valves shall be for 150 psi working pressure, unless otherwise specified. Valve shall have adjustable tension lever and spring to provide non-slamming action under all conditions unless otherwise specified.

W4-15 AIR AND VACUUM RELEASE VALVE

Combination Air Valves shall be of the single housing style that combines the operating features of both an Air/Vacuum and Air Release Valve.

The Air/Vacuum portion shall automatically exhaust air during the filling of the pipeline and automatically allow air to re-enter the pipeline when the internal pressure of the pipeline approaches a negative value due to column separation, draining of the pipeline, power outage, pipeline break, etc.

The Air Release portion shall automatically release small pockets of air from the pipeline while the pipeline is in operation and under pressure, and during filling of the pipeline.

The Combination Air Valve shall have minimum 1" NPT inlet and outlet connections and be able to withstand a working pressure of 300 PSI.

The valve body and cover shall be cast iron with stainless steel float.

W4-16 PRESSURE REDUCING STATION

Unless otherwise shown on the construction plans, a standard pressure reducing station shall have a 6" pressure reducing valve with flanged ends and a bypass with a 2" pressure reducing valve with threaded ends. Pressure reducing valves shall have opening/closing speed controls, epoxy coated body, and valve position indicator. Pressure reducing valves and pressure relief valves shall be equipped with stainless steel trim (seat, stem, and cover bearing). Pilot controls shall be on the side of the pressure reducing valve facing vault interior. Each pressure reducing valve shall include two 3/8" test cocks located on the opposite side of valve body from the pilot controls (one at inlet and one at outlet end of valve).

Strainers shall be installed on the inlet side of each pressure reducing valve with bronze ball valve sized to correspond with the strainer blow-off outlet size. A 2" pressure relief valve with threaded ends shall be installed on the discharge side of the 2" pressure reducing valve line and vented to atmosphere as shown on the plans.

The pressure reducing valve shall maintain a constant downstream pressure regardless of varying inlet pressure. The valve shall be a hydraulically operated diaphragm-actuated, globe valve. The

pilot control shall be a direct-acting, adjustable, spring loaded, normally open, diaphragm valve, designed to permit flow when controlled pressure is less than the spring setting. The control system shall include a fixed orifice.

The pressure relief valve shall maintain constant upstream pressure by by-passing or relieving excess pressure, and shall maintain close pressure limits without causing surges. The main valve shall be hydraulically operated, diaphragm-actuated, globe valve. The pilot control shall be a direct acting, adjustable, spring loaded, diaphragm valve, designed to permit flow when controlling pressure exceeds spring setting. The pilot control system shall operate such that as excess line pressure is dissipated the main valve shall gradually close to a positive, drip-tight seating.

All diaphragm-actuated valves shall contain a resilient, synthetic rubber disc, having a rectangular cross-section, contained on three and one-half sides by a disc retainer and forming a tight seal against a single removable seat insert. The diaphragm assembly containing a valve stem shall be fully guided at both ends by a bearing in the valve cover and an integral bearing in the valve seat. This diaphragm assembly shall be the only moving part and shall form a sealed chamber in the upper portion of the valve, separating operating pressure from line pressure. The diaphragm shall consist of nylon fabric bonded with synthetic rubber and shall not be used as a seating surface. Packing glands and/or stuffing boxes are not permitted and there shall be no pistons operating the valve or pilot controls. All necessary repairs shall be possible without removing the valve from the line.

Strainers 2 inches and smaller shall be iron bodied "Y" type equal in size to corresponding pressure reducing valve. Strainers 3 inches and larger shall be Cla-Val X43H “H” style strainers. Strainer shall feature bolted cover machined to hold screen securely in place and tapped F.I.P.T. for blow-off outlet. Screens 2 inches and smaller shall be constructed from perforated stainless steel. . Main-line strainer shall have flanged-ends and bypass strainer shall have threaded ends.

The vault shall be equal to Utility Vault Co. model 777-LA with cover as specified in the Standard Detail. Vault exterior shall be coated with a single component, moisture curing urethane with micaceous iron oxide applied at 5 to 7 micron dry film thickness per coat, two coats minimum, Sherwin-Williams Corothane 1-Coal Tar, or equal. Vault interior shall not be coated.

W4-17 LIDS, HATCHES AND COVERS – SLIP RESISTANCE

Metal lids, hatches and access covers shall be constructed with a non-slip treatment having a coefficient of friction between 0.6 and 1.0 wet, as determined by ASTM C1028-89. Lids, hatches and access covers located on slopes of 4% or greater shall have a coefficient of friction between 0.8 and 1.0 wet, as determined by ASTM C1028-89. Prior to installation, the Contractor shall supply the Engineer with a shop drawing of the appurtenance, specifying a coefficient of friction meeting or exceeding the above requirement.

W4-18 CITY-FURNISHED INDIVIDUAL PRESSURE REDUCING VALVE (RESIDENTIAL)

Individual pressure reducing valve shall be direct-acting piston type with integral strainer and bypass. Valve body shall be bronze with threaded outlet end and integral union on inlet end. Valve shall be line-sized with spring range from 25 to 75 psi.

All other appurtenances shall be as shown in the Standard Detail.

W4-19 CITY-FURNISHED INDIVIDUAL PRESSURE REDUCING VALVE (MULTI-FAMILY OR COMMERCIAL)

Individual pressure reducing valve shall be equipped with a pressure relief valve at the discharge side, unless otherwise shown in the plans. Unless otherwise directed by the engineer, the contractor shall construct the pressure reducing valve assembly in accordance with the Standard Detail.

Individual pressure reducing valve shall be direct-acting piston type with integral strainer and bypass. Valve body shall be bronze with threaded outlet end and integral union on inlet end. Valve shall be line-sized with spring range from 25 to 75 psi.

The pressure relief valve shall be a 3/4" hydraulically or pneumatically operated, diaphragm actuated globe valve. It shall be direct-acting, adjustable, spring loaded and designed to permit flow when pressure exceeds the spring setting. Spring range shall be from 20 to 200 psi.

All other appurtenances shall be as shown in the Standard Details.

W4-20 FIRE HYDRANT

Fire Hydrants shall have a minimum valve opening of five and one-quarter (5-1/4") inch "O" ring stem seal, two - two and one half (2 - 2 1/2") inch N.S.T. hose nozzle connections, and one-four (1-4") inch pumper connection with City of Seattle standard threads. The shoe connection, foot valve connection, and all joints between shall be six-inch mechanical joints with lugs. The operating and port cap nuts are one and one-quarter (1-1/4") inch pentagonal. Hydrants shall be as shown in the approved materials list, with no exceptions unless approved by the Engineer. All hydrants shall be of the "Traffic Model" type with approved break-away features and brass to brass sub-seat. Shackle rods are not permitted on hydrants.

The portion of the **public** fire hydrant that is above ground shall be painted with two (2) coats of Rust-Oleum, Krylon, or Sherwin-Williams Safety Yellow paint.

The portion of the **private** fire hydrant that is above ground shall be painted with two coats of Rust-Oleum, Krylon, or Sherwin-Williams Red paint as set forth by the City of Bellevue Fire Department.

W4-21 HYDRANT GUARD POSTS

Hydrant guard posts shall be 6" diameter concrete filled ductile iron pipe class 52, 6 feet long. Posts shall be painted with two (2) coats of Rust-Oleum, Krylon, or Sherwin-Williams Safety Yellow paint.

W4-22 METER SETTER

Meter setters shall have dual purpose couplings, unless otherwise specified, and angle meter valve with drilled wings for padlock, twelve (12") inches high. The angle copper setter for the size meter to be installed, see Standard Details.

1 1/2" meter setters shall have vertical inlet and outlet tees with 1" lateral bypass, flanged ball meter valves on inlet and outlet, ball valve on bypass, and padlock wings on all valves, see Standard Details.

2" meter setters shall have vertical inlet and outlet tees with 1" lateral bypass, flanged ball meter valve on inlet, flanged key meter valve on outlet, ball valve on bypass, and padlock wings on all valves, see Standard Details.

W4-23 CORPORATION STOP

Corporation stops shall be brass in accordance with AWWA Standard C800 with AWWA tapered thread (CC) inlet by compression fitting for copper outlet, complete with coupling nut for copper service.

Corporation stops for 1", 1 1/2” and 2” tap shall be ball valve type.

W4-24 METER BOX

Cast iron, steel and plastic composite meter boxes with non-slip ductile iron lid as specified in the Standard Details. Meters shall be centered in box.

W4-25 COPPER SERVICE PIPE

All copper pipe for underground water service 2" or less shall be seamless conforming to ASTM B88 (ANSI H33.1) Type "K" annealed tubing.

Copper service pipe larger than 2” shall be Type K hard drawn, 20' lengths.

W4-26 Not Used

W4-27 PIPE INSULATION

All pipe for above ground service shall have 2-inch thick foam insulation with an aluminum jacket. Foam insulation and aluminum jacket shall conform to the following:

Foam insulation shall be closed cell polystyrene foam manufactured by extrusion process. Foam insulation shall be odorless, chemically inert, with no food value and shall be resistant to ground chemicals and microorganism. Foam insulation shall conform to the following properties:

PROPERTIES	ASTM TEST	AVERAGE
Thermal Conductivity "K" Factor BTU HR./SQ. FT./+F/IN. Mean Temp. 40+	C518-70 & C177-63	0.23
Moisture Resistance Water Absorption % By Volume	D2842-69	0.8
Water Vapor Transmission (Parm-Inch)	C355-64	0.9
Physical Density (lb./cu. ft.)	C303-56	1.8
Compressive Strength (PSI) Perpendicular to Board Face (5% Deflection or Yield)	D1621-64	40

Aluminum jacketing shall be manufactured from Type 3003 or 5005 alloy; temper of H-14 gauge 0.016.

W4-28 CONCRETE BEDDING & BLOCKING

Bedding, blocking, encasement, or slope anchor concrete shall be mixed from materials acceptable to the Engineer and shall have a 30-day compressive strength of not less than 2,500 psi. The mix shall contain five (5) sacks of cement per cubic yard and shall be of such consistency that the slump is between 1 inch and 5 inches. All concrete shall be mechanically mixed. Blocks shall be left open for inspection.

W4-29 JOINT RESTRAINT

Joint restraint methods shall be as per the Approved Materials list. Where shackle restraint is used, all shackle rods shall be stainless steel (All Thread 316SS), along with 316SS stainless steel hardware. Stainless steel shackle restraints do not require painting.

W4-30 REDUCED PRESSURE BACKFLOW ASSEMBLY

All Reduced Pressure Backflow Assemblies shall be as listed on the most current copy of "Backflow Prevention Assemblies Approved for Installation in Washington State", published by Washington State Department of Health (D.O.H.). The assembly shall include a tightly closing resilient seated shut-off valve on each end of the body and each assembly shall be fitted with four properly located resilient seated test cocks.

All other appurtenances shall be as shown in the Standard Detail.

W4-31 REDUCED PRESSURE DETECTOR ASSEMBLY

This assembly shall include a line-sized D.O.H. approved (listed on the most current copy of "Backflow Prevention Assemblies Approved for Installation in Washington State" published by Washington State D.O.H.) Reduced Pressure Backflow Assembly with a parallel 3/4" meter and 3/4" D.O.H. approved Reduced Pressure Backflow Assembly. Each assembly shall include a tightly closing resilient seated shut-off valve on each end of the body and each assembly shall be fitted with four properly located resilient seated test cocks.

All other appurtenances shall be as shown in the Standard Detail.

W4-32 DOUBLE CHECK VALVE ASSEMBLY

All Double Check Valve Assemblies shall be as listed on the most current copy of "Backflow Prevention Assemblies Approved for Installation in Washington State" published by Washington State D.O.H. The assembly shall include a tightly closing resilient seated shut-off valve on each end of the body and each assembly shall be fitted with four properly located resilient seated test cocks.

All other appurtenances shall be as shown in the Standard Detail.

W4-33 DOUBLE CHECK DETECTOR ASSEMBLY

This assembly shall include a line sized D.O.H. approved (listed on the most current copy of "Backflow Prevention Assemblies Approved for Installation in Washington State" published by Washington State D.O.H.) Double Check Valve Assembly with a parallel 3/4" meter and 3/4" D.O.H. approved double check Valve Assembly. Each assembly shall include a tightly closing resilient seated shut-off valve on each end of the body and each assembly shall be fitted with four properly located resilient seated test-cocks.

All other appurtenances shall be as shown in the Standard Detail.

W4-34 BACKFLOW ASSEMBLY RESILIENT SEATED SHUT-OFF VALVES

Each valve shall be marked with model number with designation of resilient seat; such as "RS" or "R", which must be cast, molded, or affixed onto the body or bonnet of the valve. All ferrous-bodied valves shall be coated with a minimum of 4 mils of epoxy or equivalent polymerized coating. 2" and smaller R.P.B.A.s and D.C.V.A.s shall use ball valves, and all 2-1/2" and larger R.P.B.A.s and D.C.V.A.s shall use resilient seated gate valves for domestic supply and resilient seated O.S. and Y. valves for firelines.

The minimum requirements for all resilient seated gate valves shall, in design, material and workmanship, conform to the standards of AWWA C509.

W4-35 BARRIER FENCE

Barrier Mesh shall be manufactured from Low Density Polyethylene, stabilized against UV degradation, and with a special selection of pigments to ensure optimum visual performance under harsh weather conditions. Barrier Mesh shall be corrosion-free and resistant to salt water and most chemicals.

Barrier Mesh shall present a visual target area of approximately 0.5 square meter per square meter of mesh.

W4-36 BEDDING AND BACKFILL

W4-36.1 Pipe Bedding Materials

For Reinforced Concrete Pipe (RCP), Corrugated Metal Pipe (CMP - which includes steel and aluminum), and Ductile Iron Pipe (DIP), bedding material shall be in accordance with Section 9-03.12(3) Gravel Backfill for Pipe Zone Bedding of the Standard Specifications.

For convenience, crushed rock bedding conforming to crushed surfacing top course material of Section 9-03.9(3) Crushed Surfacing of the Standard Specifications may also be used as bedding material for pipe.

In unpaved areas, the Contractor may request to use excavated material used as pipe bedding where it has been determined by the Engineer as suitable meeting the requirements of Section 9-03.12(3) Gravel Backfill for Pipe Zone Bedding of the Standard Specifications, and proper compaction levels can be achieved.

For Polyvinyl Chloride (PVC) pipe, Corrugated Polyethylene (CPE) pipe, and other thermoplastic pipe, bedding material shall be imported material conforming to crushed surfacing top course material of Section 9-03.9(3) Crushed Surfacing of the Standard Specifications.
For ductile iron water main pipe, the Contractor may request to use excavated material as pipe bedding where it has been determined by the Engineer as suitable material meeting the requirements of Section 9-03.12(3) Gravel Backfill for Pipe Zone Bedding of the Standard

Specifications and proper compaction levels can be achieved.

W4-36.2 Trench Backfill Materials

For transverse trenches (perpendicular to the roadway centerline) in paved areas, crushed rock backfill conforming to Section 9-03.9(3) Crushed Surfacing of the Standard Specifications shall be used as trench backfill for pipe.

For longitudinal trenches (trenches parallel to the centerline of the roadway) in paved areas, backfill material (4 feet and deeper below finished grade) shall conform to Section 9-03.14(1) Gravel Borrow of the Standard Specifications. The Contractor may request to use excavated material as trench backfill and must demonstrate to the Engineer that the suitable excavated material conforms to Section 9-03.14(1) Gravel Borrow of the Standard Specifications and proper compaction levels can be achieved. Admixtures and/or additives may not be used to modify the moisture content in order to meet compaction specifications.

The top 4 feet of longitudinal trenches shall be backfilled with crushed rock conforming to Section 9-03.9(3) Crushed Surfacing of the Standard Specifications.

In unpaved areas, trench backfill material shall conform to Section 9-03.14(1) Gravel Borrow of the Standard Specifications. The Contractor may request to use excavated material as trench backfill when it has been determined by the Engineer to be suitable and conforms to Section 9-03.14(1) Gravel Borrow of the Standard Specifications and proper compaction levels can be achieved.

4-36.3 Structure Backfill Materials

In paved areas, backfill material (4 feet and deeper below finished grade) shall conform to Section 9-03.14(1) Gravel Borrow of the Standard Specifications. The Contractor may request to use excavated material as trench backfill when it has been determined by the Engineer to be suitable and conforms to Section 9-03.14(1) Gravel Borrow of the Standard Specifications and proper compaction levels can be achieved.

The top 4 feet around structures shall be backfilled with crushed rock conforming to Section 9-03.9(3) Crushed Surfacing - Top Course of the Standard Specifications.

In unpaved areas, structure backfill material shall conform to Section 9-03.14(1) Gravel Borrow of the Standard Specifications. The Contractor may request to use excavated material as structure backfill when it has been determined by the Engineer to be suitable and conforms to Section 9-03.14(1) Gravel Borrow of the Standard Specifications and proper compaction levels can be achieved.

4-36.4 Foundation Gravel Materials

Foundation gravel for structures shall consist of one of the following aggregates as set forth in the Standard Specifications:

Ballast	9-03.9(1)
Shoulder Ballast	9-03.9(2)
Gravel Backfill for Foundations (Class A or B)	9-03.12(1)
Foundation Material Class A and Class B	9-03.17

4-36.5 Controlled Density Fill Materials

Controlled density fill (CDF, aka flowable fill) shall be a mixture of Portland Cement, admixture (optional), Fly Ash, aggregates and water. It shall be proportioned to provide a grouty, non-segregating, free flowing, self-consolidating and excavatable material that will result in a non-settling fill which has measurable unconfined compressive strength.

Materials testing shall be with unconfined compressive test cylinders. Test data may be either laboratory trial batch test data or field test data.

Alternate mix designs may be required at the Engineer's discretion.

The unconfined compressive strength at 28 days shall be a minimum of 50 psi and a maximum of 100 psi. Material shall be a sand/grout slurry proportioned to be hand-excavatable after long term strength gain.

Materials shall meet the requirements of the following sections of the Standard Specifications:

Portland Cement	9-01
Fine Aggregate for Portland Cement Concrete	9-03.1(2)
Admixture for Concrete	9-23.6
Fly Ash	9-23.9
Water	9-25

Controlled density fill shall meet the following requirements:

Controlled Density Fill

Ingredients	Amount per Cu. Yd.
Portland Cement	50 lb.
Aggregates Class 1 or 2	3300 lb.
Air Entrainment Admixture	Per Manufacturer’s recommendations
Fly Ash Class F	300 lb.
Water	300 lb. (maximum)

The material consistency shall be flowable (approx. slump 3-10 inches). If requested by the Contractor, the proportions may be adjusted with the approval of the Engineer.

W4-37 STEEL CASING

Steel casing shall be black steel pipe conforming to ASTM A53. Before installation, coat casing exterior with shop-applied anticorrosive coating conforming to AWWA C210. Minimum coating thickness shall be 16 mils dry film thickness (DFT); however, thickness shall not exceed manufacturer's recommended thickness. Coating type shall be a polyamide epoxy-coal tar equal to Tnemec Hi-Build Tneme-Tar, Series 46H-413.

Casing wall thickness shall be 0.250 inch for casings 24 inches or less in diameter and 0.375 inch for casings over 24 inches in diameter.

Carrier pipe for water shall be Ductile Iron, Class 52.

W4-38 CASING SPACER

Casing spacer shell shall be manufactured in two pieces from heavy gauge T-304 stainless steel or 14 gauge hot rolled pickled steel joined with ribbed flanges. The shell shall be lined with a PVC liner 0.090 inch thick with 85-90 durometer.

Carbon steel casing spacer shell and risers shall be coated with a heat fused Polyvinyl chloride coating, or hot-dip galvanized.

Polyvinyl Chloride Coating Specifications:

Durometer - Shore A2 (10 Sec.) (ASTM D-1706-61T)	-	80
Max. operating temperature (constant)	-	150° (65°C)
Electrical properties (ASTM D-149-61) (short time .010")	-	1380 V/Mil
Resistance:		
Salt spray (ASTM B-117)	-	Excellent
Acids	-	Good
Alkalies	-	Good

All nuts and bolts shall be 18-8 stainless steel.

Runners shall be supported by risers made from heavy gauge T-304 stainless steel or 12 gauge hot rolled pickled steel. Runners shall be ultra high molecular weight polymer with high resistance to abrasion and sliding wear.

TYPICAL DATA			
PROPERTY	**ASTM METHOD**	**UNITS**	**VALUE**
Specific Gravity	D-792	gm/cc	.934
Tensile Strength (Break)	D-638	PSI	3500
Elongation (Break)	D-638	%	380
Izod Impact	D-256	Ft.lbs/in. of notch	No break
Hardness	D-2240	Shore D	67
Coefficient of Friction	D-1894	-	0.11 - 0.13
Heat Distortion Temp.66 PSI	D-648	C	88
Coefficient of Thermal Expansion	D-696	F-1	5.5 x 10-5

ABRASION CHARACTERISTICS

Taber Abrasion	D-1044	Mg/loss	N
Sand Slurry *****			7

* Sand slurry condition - 7 hours in one part sand/ one part water slurry at 1725 RPM. Carbon steel - 100, Hifax - 15. The lower the value, the more resistant to abrasion.

Casing spacers shall be "center positioning" type. Height of risers and runners combined shall be sufficient to keep the carrier pipe bell, couplings, or fittings at least 0.75" from the casing pipe wall at all times and provide at least 1" clearance between runners and top of casing wall, to prevent jamming during installation.

END OF CHAPTER W4

CHAPTER W5 - WATER METHODS OF CONSTRUCTION

TABLE OF CONTENTS

W5-01 GENERAL CONSTRUCTION REQUIREMENTS ..... W5 - 1

W5-02 SURFACE WATER QUALITY ..... W5 - 1

W5-03 LAYING DUCTILE IRON PIPE ..... W5 - 2

W5-04 POLYETHYLENE ENCASEMENT ..... W5 - 2

W5-05 LAYING GALVANIZED IRON PIPE ..... W5 - 2

W5-06 FIRE HYDRANT INSTALLATION ..... W5 - 3

W5-07 VALVE INSTALLATION ..... W5 - 3

W5-08 AIR VACUUM INSTALLATION ..... W5 - 4

W5-09 VALVE BOX MARKER INSTALLATION ..... W5 - 4

W5-10 SERVICE LINES ..... W5 - 4

W5-11 PRESSURE REDUCING STATION ..... W5 - 5

W5-12 CITY-FURNISHED INDIVIDUAL PRESSURE REDUCING VALVE ..... W5 - 5

W5-13 CONCRETE BLOCKING ..... W5 - 6

W5-14 CONNECTION TO EXISTING water main ..... W5 - 6

W5-15 ORDER OF CONSTRUCTION ..... W5 - 8

W5-16 HYDROSTATIC TESTS ..... W5 - 8

W5-17 STERILIZATION & FLUSHING OF WATER MAINS ..... W5 - 8

W5-18 PRECONSTRUCTION PHOTOS FOR CITY CONTRACTS ..... W5 - 9

W5-19 UNDERGROUND UTILITIES ..... W5 - 9

W5-20 CONSTRUCTION ON EASEMENTS ..... W5 - 10

W5-21 DUST CONTROL ..... W5 - 10

W5-22 BARRIER FENCE ..... W5 - 10

W5-23 TRENCH EXCAVATION ..... W5 - 11

W5-24 SHEETING & SHORING ..... W5 - 11

W5-25 TRENCH DEWATERING ..... W5 - 12

W5-26 BEDDING, BACKFILL AND COMPACTION ..... W5 - 12

W5-27 TRENCHLESS EXCAVATION ..... W5 - 15

W5-28 ADJUST EXISTING STRUCTURE TO GRADE ..... W5 - 15

W5-29 ABANDONING FACILITIES ..... W5 - 16

W5-30 LAWN REMOVAL AND REPLACEMENT ..... W5 - 16

W5-31 BORING UNDER ROOTS ..... W5 - 17

W5-32 HIGHWAY AND RAILROAD CROSSINGS ..... W5 - 17

W5-33 BORING AND JACKING STEEL CASING ..... W5 - 17

W5-34 WORKING WITH ASBESTOS CEMENT PIPE ..... W5 - 18

W5-35 ASBESTOS CEMENT water main CROSSINGS ..... W5 - 18

W5-36 VAULT INSTALLATION ..... W5 - 19

W5-37 CLEARANCES / OTHER UTILITIES ..... W5 - 19

CHAPTER W5 - WATER METHODS OF CONSTRUCTION

W5-01 GENERAL CONSTRUCTION REQUIREMENTS

The improvements shall be constructed as shown on the plans and in accordance with these Standards, Standard Details, and Standard Specifications. Manufacturer's equipment shall be installed in compliance with specifications of the manufacturer, except where a higher quality of workmanship is required by the plans and specifications. All materials and work shall be in strict accordance with any applicable regulations of the State, County and local authorities. The Contractor shall arrange for such arrange for such inspection by these agencies as may be required and shall submit evidence of their approval, if requested by the Engineer.

W5-01.1 Alignment & Staking

All work done under a Project shall be to the lines shown on the plans or to approved revisions.

W5-01.2 Inspections & Tests

A. The Engineer shall, at all times, have access to the work for the purpose of inspecting and testing, and the Contractor shall provide proper facilities for such access and such inspection and testing.

B. If any work is covered up without approval or consent of the Engineer, it must, if required by the Engineer, by uncovered for inspection.

C. Before a performance test is to be observed by the Engineer the Contractor shall make whatever preliminary tests are necessary to assure that the material and/or equipment are in accordance with the plans and specifications.

D. Written notice of deficiencies, adequately describing the same, shall be given to the Contractor upon completion of each inspection and the Contractor shall correct such deficiencies within seven days of the notice and before final inspection will be made by the Engineer, unless otherwise approved.

W5-02 SURFACE WATER QUALITY

The Contractor is required to implement water pollution controls and maintain these until the project is accepted by the City. The Contractor shall familiarize himself with the requirement of the Department of Ecology and other regulatory agencies having jurisdiction over such matters.

The following list of requirements is a summary of the construction activity requirements of the Department of Ecology and is provided as a guide to the Contractor. The Department of Ecology may have additional requirements with which the Contractor shall comply.

W5-02.1 Chlorine Residual from Water Main Testing or Disinfection

Water with chlorine residual shall be disposed of through sanitary sewers, storing and aerating or percolation into the ground. Water containing a chlorine residual shall not be disposed of into the storm drainage system or any waterway.

W5-02.2 Oil and Chemical Storage and Handling

Storage area shall be diked. No disposal of oil products or waste on the site, including oil filters. The Contractor shall provide a waste oil disposal tank, if needed.

W5-03 LAYING DUCTILE IRON PIPE

Work shall be accomplished in accordance with AWWA Standard C600 and the manufacturer's recommendation.

The bottom of the trench shall be finished to grade in such a manner that the pipe will have bearing along the entire length of the barrel. Bolts on mechanical pipe and fittings shall be tightened uniformly with a "Torque" wrench which measures the torque for mechanical joints shall be as follows:

2" - 3" pipe sizes 5/8" Bolts	40 - 60 ft-lbs torque
4" - 24" pipe size 3/4" Bolts	60 - 90 ft-lbs torque

Installation of push-on joint (Tyton) pipe shall be in accordance with the manufacturer's instructions. All buried ductile iron pipe and adjacent valves and fittings shall be encased with 8-mil polyethylene.

Pipe shall not be located below soil nails. If the pipe is located above a soil nail, a minimum of 5' of clearance is required.

W5-04 POLYETHYLENE ENCASEMENT

Installation of Polyethylene Encasement shall be in accordance with the latest AWWA Standard C105. All Ductile iron pipe and fittings shall be wrapped except as specifically excluded on the plans or in these specifications.

W5-05 LAYING GALVANIZED IRON PIPE

The galvanized iron pipe, valves and fittings shall be threaded.

Joints shall be made in accordance with good plumbing practice. Threads shall be coated with Teflon tape before connecting.

Pipe shall not be located below soil nails. If the pipe is located above a soil nail, a minimum of 5' of clearance is required.

W5-06 FIRE HYDRANT INSTALLATION

Fire hydrants shall be set as shown in the Standard Details and AWWA Standard C600. Hydrant and the gate valve must have lugs. The tee on the main line shall not be considered as part of the assembly. The hydrant run shall be restrained with MEGALUG restrainer at M.J. end on hydrant and gate valve. If more than one pipe is required on hydrant run, connect pipes with mechanical joint sleeve and MEGALUG restrainers.

When fire hydrants are located in parking lots, or other areas where permitted speed limits do not exceed five miles per hour, hydrant guard posts shall be installed as follows:

> Hydrant guard posts shall be installed in areas where the hydrant is not protected by a cement concrete curb on all sides where vehicles may have access. Guard posts shall be installed according to the minimum dimensions shown in the Standard Details.

Where a hydrant is being installed, reset, moved or reconnected, a blue raised pavement marker (Type 2) shall be installed perpendicular to each hydrant in the interior channelization of the outside lane, unless one already exists. Install the lane marker one foot off of the channelization line, toward the hydrant.

W5-07 VALVE INSTALLATION

Before installation, valves shall be cleaned of all foreign material. Such blocking as the Engineer may deem necessary shall be provided. The valve and valve box shall be set plumb with the valve box centered on the valve. The top of the valve box shall be set with all valves except auxiliary valves for hydrants. Where valve operating nut is more than three feet below finished grade, a stem extension conforming to the Standard Detail must be installed. Tapping valves shall be water tested prior to tapping water main.

The top of the valve box base section shall be located a minimum of 6" and maximum of 9" below finished grade. A polyethylene sheet, 8-mils thick, shall be placed between the top and base valve box sections to prevent metal to metal contact where the sections overlap.

Valve box top sections shall be adjusted flush with the finished pavement and, in those areas to be excavated for future roadway grades, enough adjustment shall be provided in the valve box to allow the top of the box to be adjusted to the required grade.

W5-08 AIR VACUUM INSTALLATION

Installation shall be as shown on the Standard Detail.

Iron Piping and fittings shall be galvanized. Location of the air release valves as shown on the plans is approximate. The installation shall be set at the high point of the line. The water line must be constructed so the air release valve may be installed in a convenient location.

W5-09 VALVE BOX MARKER INSTALLATION

Concrete marker posts, painted with two coats Rust-Oleum No. 2766 Hi-Gloss white paint, shall be set for all valves, where needed. The marker shall be set on a line through the valve at right angles to the center line of the road. The marker shall generally be set on the property line unless the Engineer decides another location is safer or more conspicuous. Distance to the valves shall be neatly stenciled on the post with 2-inch numerals. Valve markers shall be installed only in unimproved or unpaved areas.

W5-10 SERVICE LINES

W5-10.1 New Service Installations

Service installation shall be as shown on the Standard Details.

Tapping of polyethylene encased ductile iron pipe shall be performed by wrapping three layers of polyethylene compatible adhesive tape completely around the pipe to cover the area where the direct tapping machine and chain will be mounted.

Where a saddle is used in lieu of direct tapping, make a cut in the taped area large enough to accommodate the gasket directly in contact with the ductile iron pipe. Make necessary repair for damaged encasement.

The existing polyethylene encasement shall be field cut and replaced after the tap is installed.

W5-10.2 Reconnecting Existing Services

Install service connections as shown on the Standard Detail and plans. Install services under paving by boring. Bore or tunnel under sidewalks and curbs. Damages shall be repaired by Contractor. Provide 30" minimum cover on service lines. Install service at 90 degrees horizontally to the main to intercept the existing meters. A deviation of not more than 3 degrees will be allowed. Blow off service prior to connection to meter.

Install meter setter and boxes as shown on the Standard Detail and where directed by the Engineer.

Service connections shall not be transferred to the new main until it has been successfully flushed, disinfected and tested. When transferring services from the existing main to the new main, the Contractor shall take sanitary precautions to protect the potable water supply in both the existing and new mains.

The Contractor shall submit for approval a sketch and a list of proposed bushings, adapters, etc. The sketch shall show proposed fittings, (by brand name) for single meter hookups, and connection to existing copper and plastic pipe of various diameters. Multi-meter hook-ups are not allowed; when existing multi-meter hook-ups are encountered, the Contractor shall convert them to single meter hook-ups.

All new service line shall be soft annealed copper.

No reconnection to sub-standard service lines shall be allowed.

Substandard plastic service pipe is usually 80 psi polyethylene pipe. The Engineer shall decide if existing service lines are substandard.

W5-11 PRESSURE REDUCING STATION

The pressure reducing valves, strainers, pressure relief, pipes and fittings shall be constructed in accordance with the applicable AWWA and uniform plumbing code requirements. Pressure reducing valves, 6" and larger, shall be supported by a pipe stanchion. Stanchion shall be bolted to vault floor.

Pressure relief discharge pipe shall be placed in location that will not be subject to damage or erosion during discharge of water.

W5-12 CITY-FURNISHED INDIVIDUAL PRESSURE REDUCING VALVE

Individual pressure reducing valve assembly shall be installed on the discharge side of the existing water meter, and shall be contained inside a new water meter box. Each pressure reducing valve shall be installed, as shown in the approved plans and Standard Detail, in accordance with the latest edition of the uniform plumbing code, and as described in these specifications or as directed by the engineer. All excavation shall be made manually to minimize disturbance of the surrounding areas.

All improved areas disturbed by construction shall be restored to its original condition or better in accordance with these specifications.

Before attempting to make any cut into the existing service line the contractor shall make sure that necessary fittings and connectors are available in order to avoid a prolonged shut-off water service.

Existing service lines consist of copper tubing, polyethylene pipe, galvanized iron pipe or PVC pipe.

Contractor shall notify the property owners or property managers 48 hours in advance prior to installation of pressure reducing valve assembly. Water shut-off affecting business establishments shall be performed after business hours.

When not installed through a developer extension or City capital improvement project, the developer, or builder, shall install necessary individual pressure reducing valves in conformance with the uniform plumbing code.

W5-13 CONCRETE BLOCKING

All bends and tees and valves shall be blocked in accordance with the Standard Details. All poured in place blocking shall have a minimum measurement of twelve inches (12") between the pipe and the undisturbed bank. The Contractor shall install blocking which is adequate to withstand full test pressure as well as to continuously withstand operating pressures under all conditions of service. All concrete shall be mechanically mixed.

W5-14 CONNECTION TO EXISTING WATER MAIN

Points of connection to existing water mains shall be exposed prior to trenching of the new line, and not less than 48 hours prior to the anticipated connection time. The Contractor shall request a shut-down from the Utility at least 7 calendar days excluding holidays in advance of the need of any water main shut-off or connection. water main shut-offs shall not be scheduled to take place on Fridays, or on the five days before nor one day after a City holiday, unless otherwise approved by the Utility. The Contractor shall notify impacted water customers not less than 48 hours (2 calendar days excluding weekends and holidays) in advance of interruption of water service. The Contractor shall ensure that the existing fittings are in accordance with the approved plans and that the connection can be made in accordance with the approved plans. The Contractor shall immediately notify the Engineer if the connection cannot be made in accordance with the plans in order that the connection detail may be revised.

Connection to the existing main shall take place only after the new main is flushed, disinfected, and satisfactory bacteriological sample results are obtained. An approved backflow prevention assembly shall be installed between the existing and new water lines during disinfection and flushing of new main. All connections to the existing system and all testing of the new line must be with the authorization of, and in the presence of, the authorized representative of the Utility. Opening and closing of valves, and use of water from the City's system, will be done only by the Utility. The backflow preventer and supply hose must be disconnected during hydrostatic pressure testing of new main.

The Utility priority is to install connections to existing water mains via cut-ins. Tapping tees are of second priority and may be installed upon approval by the Utility. Connections may be made

to existing pipes under pressure with a tapping machine by determining the size and type of pipe and installing tapping tee to fit complete with tapping gate valve. Tapping tees shall be installed as shown on the Standard Details. Where cut-ins are permitted to be made in existing pipes, the work shall be conducted at such a time and in such a manner as to minimize the interruption of service. Cut-in time must be approved by the Utility. Necessary pipe, fittings and gate valves shall be assembled at the site ready for installation prior to the shutting-off of water in the existing main. Once the water has been shut off, the work shall be prosecuted vigorously and shall not be halted until the line is restored to service. The interiors of all pipe and fittings to be used in final connection shall be swabbed or sprayed with a 1% available chlorine solution.

All water main shut-offs shall be performed by Water Utility staff. Water main shut-offs shall occur during non-holiday weekdays unless otherwise specified herein or as agreed to by the Engineer. The Contractor shall request water main shut-offs at least seven calendar days in advance (not including holidays) of need. The Contractor shall notify all affected water users in writing at least 48 hours in advance (not including weekends and holidays) of any water shut-offs. The Engineer will provide the written notice to customers for the Contractor to distribute.

Water main shut-offs shall not occur in the five (5) weekdays preceding or the day after the major holidays listed below:

- Memorial Day
- Fourth of July
- Labor Day
- Thanksgiving
- Christmas
- New Year's Day

Due to the needs of various water customers in the project vicinity, water shut-off periods are limited to the times set forth below:

Days	Hours
Monday	8:30 AM to 3:00 PM
Tuesday	8:30 AM to 3:00 PM
Wednesday	8:30 AM to 3:00 PM
Thursday	8:30 AM to 3:00 PM
Friday	DO NOT SCHEDULE
Saturday	DO NOT SCHEDULE
Sunday	DO NOT SCHEDULE

The Engineer, at his sole discretion, may adjust these shut-off periods in order to address specific project circumstances and customer needs.

W5-15 ORDER OF CONSTRUCTION

Restoration of trenches shall closely follow installation and testing of pipe. The Engineer will inspect and observe the hydrostatic test of the pipe within 24 hours after notification by the

Contractor that a section is ready for inspection and test. The Contractor shall contact the Engineer at least 24 hours in advance of the completion of sterilization and flushing and his representative shall be present when the Engineer takes water samples.

W5-16 HYDROSTATIC TESTS

Prior to the acceptance of the work, the installation shall be subjected to a hydrostatic pressure test of 200 psi for 15 minutes at the high point in the line and any leaks or imperfections developing under said pressure shall be remedied by the Contractor before final acceptance of the work. No air will be allowed in the lines. The mains shall be tested between valves, with a maximum length of 1500 linear feet to be tested. Insofar as possible, no hydrostatic pressure shall be placed against the opposite side of the valve being tested. Test pressure shall be maintained while the entire installation is inspected. The Contractor shall provide all necessary equipment and shall perform all work connected with the test. Tests shall be made after all valved connections have been made. At unvalved connection points, a temporary plug (or 2" blow-off assembly on lines without hydrants) shall be installed at the end of the new main. This shall include concrete blocking necessary to withstand pressures encountered during the hydrostatic test.

Fire Line testing shall be in accordance with the City’s Fire Code and National Fire Prevention Association (NFPA) Standard #13 and #25, with no loss for two hours.

Once the new line is successfully tested and disinfected, the plug (blow-off) shall be removed and the connection to the existing main completed. Insofar as it is practical, tests shall be made with pipe joints, fittings and valves exposed for inspection. For approval, pressure shall not drop more than 10 psi for 15 minutes. The Contractor shall perform the test to assure that the equipment to be used for the test is adequate and in good operating condition, and the air in the line has been released before requesting the Engineer to witness the test. The Engineer shall witness the test; if the test does not pass inspection for any reason, additional trips required to witness the test shall be done at the Contractor's expense.

The contractor shall provide special plugs and blocking necessary in those locations where it would be necessary to test against butterfly valves to insure that the pressure ratings of these valves is not exceeded during testing.

W5-17 STERILIZATION & FLUSHING OF WATER MAINS

Sterilization of water mains shall be accomplished by the Contractor in accordance with the requirements of the Washington State Department of Health and in a manner satisfactory to the Engineer. The section to be sterilized shall be thoroughly flushed at maximum flow established by the Engineer prior to chlorination. Flushing period must be approved by the City. Sections will ordinarily be sterilized between adjacent valves unless, in the opinion of the Engineer, a longer section may be satisfactorily handled. Chlorine shall be applied by solution feed at one end of the section with a valve or hydrant at the opposite end open sufficiently to permit a flow through during chlorine application. The chlorine solution shall be fed into the pipeline already

mixed by an automatically proportioning applicator so as to provide a steady application rate of not less than 60 ppm chlorine. Hydrants along the chlorinated section shall be open during application until the presence of chlorine has definitely been detected in each hydrant run. When a chlorine concentration of not less than 50 ppm has been established throughout the line, the valves shall be closed and the line left undisturbed for 24 hours.

As an alternative, the Contractor may use granulated chlorine. Granulated chlorine (dry calcium hypochlorite at 65% - 70% chlorine) shall be placed in the pipe to yield a dosage of not less than 50 ppm. The number of ounces of 65% test calcium hypochlorite required for a 20-foot length of pipe equals .00843ld, in which "d" is the diameter in inches. The line shall then be thoroughly flushed and water samples taken for approval by the local health agency. Flushing period must be approved by the City. The Contractor shall exercise special care in flushing to avoid damage to surrounding property and to conform with Section W5-01 WATER QUALITY.

Should the initial treatment result in an unsatisfactory bacteriological test, additional chlorination using the first procedure shall be repeated by the Contractor until satisfactory results are obtained. The Contractor shall be responsible for disposal of treated water flushed from mains and at no time shall chlorinated water from a new main be flushed into a body of fresh water. This is to include lakes, rivers, streams, storm drainage systems, and any and all other waters where fish or other natural water life can be expected. Disposal may be made to any available sanitary sewer provided the rate of disposal will not overload the sewer.

W5-18 PRECONSTRUCTION PHOTOS FOR CITY CONTRACTS

Before commencing any construction work as described in the plans and specifications, the Contractor shall provide photographs of pre-existing conditions of the area that will be disturbed during construction operations. Photographs will be obtained as follows:

1. Every 25 feet interval in easements.

2. Every 50 feet interval in paved areas, and

3. Any other location as directed by the Engineer.

The photographs shall be taken with a 35mm camera, developed in 4" x 6" color prints, contained in albums, catalogued, and cross-referenced.

W5-19 UNDERGROUND UTILITIES

The plans show the approximate locations of various existing utilities known to the Engineer, such as gas lines, water mains, storm drainage, power lines, telephone lines, television cables, and other obstructions based on information obtained from various sources. This information is not guaranteed to be accurate, and the Contractor is directed to check for interferences and obstructions by inquiry from the different utilities and by underground exploration ahead of his regular excavation.

The Contractor shall request field locates and notify the owners of underground facilities about the scheduled commencement of excavation through a one-call number (1-800-424-5555), or 811, 72 hours before construction for utility locations.

If the Utility is not included in the one-number locator service, notice shall be provided individually to those owners of underground facilities known to or suspected of having underground facilities within the area of proposed excavation.

Notice shall be made to owners of underground utilities not less than two (2) business days or more than ten (10) business days prior to scheduled date of commencement of excavation.

The Contractor shall excavate around and under service pipes with special care and shall support and maintain them in service. Where it is necessary to cut, move or reconnect any service lines, arrangements shall be made with the respective utility.

If a water main has been field marked as unlocatable and cannot be located by hand-digging or hydroexcavator, the excavator must contact Utility Department Personnel at (425) 452-7840 to arrange for an on-site meeting. Utility Department personnel will assess risk of damage and create a mitigation plan that may include throttling a water main or standing-by while reasonable care is taken in the continuance of work.

W5-20 CONSTRUCTION ON EASEMENTS

All work on easements shall be performed strictly in accordance with easement provisions. Easements shall be restored equal to or better than original condition. The Contractor shall do no work on easement areas until specifically authorized by the Engineer. A signed and written release from the easement grantor shall be furnished to the Utility Inspector prior to permit sign-off.

W5-21 DUST CONTROL

The contractor shall sprinkle water as necessary to keep the dust down. This sprinkling shall be maintained until the project is accepted. Sprinkling shall be kept to a minimum and shall not produce runoff from the site. On paved streets, if dust becomes a nuisance when backfilling is completed, the Contractor shall vacuum sweep the portions of streets being used for traffic. Flushing of streets shall not be permitted without prior City approval.

W5-22 BARRIER FENCE

Where indicated on the Plans, a bright orange safety fence shall be placed parallel to the silt fence, 2 feet nearer to the construction activity. Minimum fence material height shall be 2 feet. Top of fence shall be located 3 feet above ground.

The barrier fence shall be supported as recommended by the manufacturer and as directed by the

Engineer.

W5-23 TRENCH EXCAVATION

Before commencement of trenching provide mini-gabions for all downhill storm drain catch basins per City of Bellevue Standards for temporary sediment trap at curb inlet. Plastic sheeting must be available on-site. In case of rain any stockpiled material must be covered and secured.

Clearing and grubbing limits may be established by the Engineer for certain areas and the Contractor shall confine his operations within those limits. Debris resulting from the clearing and grubbing shall be disposed of by the Contractor.

Trenches shall be excavated to the line and grade designated by the Engineer and in accordance with the Standard Details. Trenches shall comply with OSHA and WISHA requirements regarding worker safety. The trench width at the top of the pipe shall be 30 inches for pipe up to and including 12 inch inside diameter and the outside diameter of the pipe barrel plus 16 inches for pipe larger than 12 inch inside diameter. Where higher strength pipe or special bedding is required because of excess trench width, it shall be furnished.

The trench shall be kept free from water until joining has been completed. Surface water shall be diverted so as not to enter the trench. The Contractor shall maintain sufficient pumping equipment on the job to insure that these provisions are carried out. The Contractor shall perform all excavation of every description and of whatever substance encountered as part of his trench excavation cost. Unsuitable material below the depth of the bedding shall be removed and replaced with satisfactory materials as determined by the Engineer.

Trenching operations shall not proceed more than 100 feet in advance of pipe laying except with written approval of the Engineer.

Providing sheeting, shoring, cribbing, cofferdams, and all aspects involved therein shall be the sole responsibility of the Contractor. Such trench/excavation protection shall comply with the requirements of Section 2-09 Structure Excavation and Section 7-08.3(1)B Shoring of the Standard Specifications, Chapter 49.17 RCW of the Washington Safety and Health Act, and Part N – Excavation, Trenching and Shoring of Chapter 296-155 WAC.

When trenching operations take place in the public right-of-way, the pavement, and all other improvements, shall be restored as required by the Right-of-Way Use Permit.

W5-24 SHEETING & SHORING

The Contractor shall provide and install sheeting and shoring as necessary to protect workmen, the work and existing utilities and other properties in compliance with OSHA and WISHA requirements. All sheeting and shoring above the pipe shall be removed prior to backfilling. Sheeting below the top of the pipe may be cut off and left in place.

All trenches and excavations more than 4 feet in depth shall be shored in compliance with applicable Federal and State regulations. Shoring shall be required in all street excavation.

Sloping to the angle of repose will be permitted only in non-critical off-street areas.

Removal of the sheeting and shoring shall be accomplished in such a manner that there will be no damage to the work or to the other properties.

W5-25 TRENCH DEWATERING

When water is encountered to a degree that a successful trenching and pipe laying operation is hampered, dewatering will be the responsibility of the Contractor. Determination of the method to be used to dewater trenched areas will be the responsibility of the Contractor, but any method used must be in accordance with the specifications and requirements of the Washington State Department of Ecology and the Local Jurisdiction.

W5-26 BEDDING, BACKFILL AND COMPACTION

W5-26.1 Pipe Bedding Construction Requirements

Pipe bedding shall conform to Section 7-08.3(1)C Bedding the Pipes of the Standard Specifications as modified herein in order to provide uniform support along the entire pipe barrel, without load concentration at joint collars or bells.

Bedding disturbed by pipe movement, by removal of shoring, or by movement of trench shield or box, shall be reconsolidated prior to placing backfill.

Pipe bedding shall be placed in loose layers and compacted to 90% maximum dry density. Lifts not more than 6 inches in thickness shall be placed and compacted along the sides of the pipe to a height of at least 6 inches above the top of the pipe. Material shall be carefully worked under the pipe haunches and then compacted.

Jetting is not an allowable method to compact the bedding materials.

W5-26.2 Trench Backfill Construction Requirements

Backfilling shall be accomplished in accordance with Section 2-09 Structure Excavation of the Standard Specifications as modified herein:

In paved areas, trench backfill material shall be compacted to 95% maximum dry density per Section 2-03.3(14)D Compaction and Moisture Control Tests of the Standard Specifications.

In unpaved areas, trench backfill material shall be compacted to 90% maximum dry density per Section 2-03.3(14)D Compaction and Moisture Control Tests of the Standard Specifications.

The Contractor shall arrange for compaction testing to be performed by a certified

technician. The Contractor shall provide the Engineer with one copy of the compaction test report within 24 hours of the completion of the test.

Compaction tests shall be made at a maximum of 4 foot depth increments with a minimum of one test for any backfilling less than 4 feet in depth. The maximum space between tests shall not exceed 100 linear feet.

For mechanical compaction methods ("hoe pack," vibratory roller, static roller, etc.), the maximum backfill lift shall not exceed 2 feet between the application of compaction equipment.

For manual compaction methods (all walk-behind equipment, "jump jack," etc.), the maximum backfill lift shall not exceed 1 foot between the application of compaction methods.

Jetting is not an allowable method to compact the trench backfill.

Surface restoration shall be as specified in the Right-of-Way Use Permit and as shown on the approved plans.

See Appendix A for trench backfill Standard Details.

W5-26.3 Structure Backfill Construction Requirements

Backfilling shall be accomplished in accordance with Section 2-09 Structure Excavation of the Standard Specifications as modified herein:

In paved areas, backfill material shall be compacted to 95% maximum dry density per Section 2-03.3(14)D Compaction and Moisture Control Tests of the Standard Specifications.

In unpaved areas, backfill material shall be compacted to 90% maximum dry density per Section 2-03.3(14)D Compaction and Moisture Control Tests of the Standard Specifications.

The Contractor shall arrange for compaction testing to be performed by a certified technician. The Contractor shall provide the Engineer with one copy of the compaction test report within 24 hours of the completion of the test.

Compaction tests shall be made at a maximum of 4 foot depth increments with a minimum of one test for any backfilling less than 4 feet in depth. At least one (1) compaction test shall be performed at each backfilled structure or for every 50 CY of backfill placed. If the structure (e.g. manhole, catch basin or inlet) is part of a pipeline trench, then trench compaction testing frequency governs.

For mechanical compaction methods ("hoe pack," vibratory roller, static roller, etc.), the maximum backfill lift shall not exceed 2 feet between the application of compaction equipment.

For manual compaction methods (all walk-behind equipment, “jump jack,” etc.), the maximum backfill lift shall not exceed 1 foot between the application of compaction methods.

Jetting is not an allowable method to compact the structure backfill.

Surface restoration shall be as specified in the Right-of-Way Use Permit and as shown on the approved plans.

W5-26.4 Foundation Gravel Construction Requirements

Foundation gravel under manholes, catch basins, inlets, vaults, and other precast concrete structures shall be placed in layers not more than 6 inches thick and compacted to provide a firm and level base on which to place the structure. Unless shown otherwise on the Contract Plans, the minimum thickness of foundation gravel under precast concrete structures is 6 inches.

W5-26.5 Controlled Density Fill Construction Requirements

Controlled Density Fill (CDF) can be proportioned to be flowable, non-segregating, or excavatable by hand or machine. Desired flowability shall be achieved with the following guidelines:

Low Flowability	below 6-inch slump
Normal Flowability	6 - 8-inch slump
High Flowability	8-inch slump or greater

CDF shall be placed by any reasonable means into the area to be filled.

CDF patching, mixing and placing may be started if weather conditions are favorable, when the temperature is at 34 degrees F and rising. At the time of placement, CDF must have a temperature of at least 40 degrees F. Mixing and placing shall stop when temperature is 38 degrees F or less and falling. Each filling stage shall be as continuous an operation as is practicable. CDF shall not be placed on frozen ground.

Trench section to be filled with CDF shall be contained at either end of trench section by bulkhead or earth fill.

When used to support existing asbestos cement (A.C.) pipe, the flowable CDF shall be brought up uniformly to the bottom of the A.C. pipe, as shown on the plans, or as directed by the Engineer.

Contractor shall provide steel plates to span utility trenches and prevent traffic contact with CDF for at least 24 hours after placement or until CDF is compacted or hardened to prevent rutting by construction equipment or traffic.

W5-27 TRENCHLESS EXCAVATION

The use of trenchless excavation methods such as pipe bursting and horizontal directional drilling shall be considered by the City on a case-by-case basis under the following conditions:

A. Romac 501 transition couplings are required at both ends.

B. The installed pipe must be electronically located and marked on the ground for measurement in order to draw the as-built schematics.

C. The pipe must be video-inspected following installation, with water running. The video inspection must be provided to the Inspector to approve the installation or require corrections.

D. Pipe bursting is not allowed on another person's property or public right-of-way without the appropriate permission, such as an easement, or right-of-way use permit.

W5-28 ADJUST EXISTING STRUCTURE TO GRADE

W5-28.1 Vault Cover Adjustment

Existing vault covers affected by a pavement overlay, or adjustment in surface grade, shall be adjusted to grade within three calendar days excluding weekends and holidays.

W5-28.2 Valve Box Adjustment - Pavement Overlays and Sidewalks

A. Raising the existing valve box cover less than 2" shall be accomplished by adjusting the existing top section of the valve box.

B. Raising the existing valve box cover 2" or more, shall be accomplished by either adjusting the existing top section or by inserting a valve box paving riser into the existing valve box top. The paving riser shall be epoxied to the valve box.

C. If the valve box base section needs to be extended, the contractor shall install a 4" diameter cast iron soil pipe, with bell-end of the soil pipe inserted over the top of the existing valve box base section. The spigot-end of the soil pipe shall be located a minimum of 6" and maximum of 9" below finished grade. The valve box top section shall be slipped over the soil pipe and adjusted to final grade. A polyethylene sheet, 8 mils thick, shall be placed between the valve box and soil pipe to prevent metal to metal contact where the sections overlap.

Final box adjustment shall leave the top of the valve box no higher than final grade, and no lower than 0.5" below final grade.

In asphalt concrete pavement overlay areas, excavation of the valve box to be raised shall be accomplished by sawcutting or neat-line jackhammering the pavement a minimum of

12" around the perimeter of the valve box.

Final adjustment of valve boxes shall be made within 20 calendar days following the final overlay.

W5-28.3 Valve Box Adjustment - Unimproved Areas

Adjustment of valve box covers located outside paved areas or sidewalks can be accomplished using a 12" valve box adjusting sleeve inserted into the existing valve box top section.

W5-29 ABANDONING FACILITIES

W5-29.1 Abandoning Pipe In Place

The Contractor shall plug the open ends of all pipes, fittings, etc. to be abandoned with end cap coupling on asbestos cement or steel pipe, with mechanical joint cap or plug on cast or ductile iron pipe.

W5-29.2 Abandoning Structures

Abandonment of structures shall be completed only after piped systems have been properly abandoned. Structures within the public right-of-way, a public easement or which are part of the publicly-owned and maintained system must be:

- ►removed completely according to Section 2-02 of the Standard Specifications; or
- ►abandoned according to Section 7-05.3(2) of the Standard Specifications provided no conflicts with new utilities or improvements arise.

W5-29.3 Abandoning Gate Valves In Place

Abandoned valves shall be removed and a blind flange installed on the tee. When an abandoned valve cannot be removed, as determined by the utility, the valve shall be closed, a blind flange installed and a piece of 2” white PVC shall be placed over the operating nut.

W5-30 LAWN REMOVAL AND REPLACEMENT

Any lawn damaged by the Contractor outside of limits shown on the plan shall be restored to conditions existing prior to construction. Contractor shall take care to limit the area of disturbance.

When lawn removal and replacement is called for, a sufficient width (at least 2' wider than outside width of backhoe wheels or tracks) of lawn turf shall be removed prior to beginning excavation so that heavy equipment does not run over the lawn.

The area of the sod to be removed shall be laid out in squares or strips of such size as to provide easy handling and matching. The sod shall then be carefully cut along these lines to a depth of four (4) inches, taking care to keep cuts straight and strips of the same width. After the sod has been cut vertically, it shall be removed to a uniform depth of approximately three (3) inches with an approved type of sod cutter.

This operation shall be performed in such manner as to ensure uniform thickness of sod throughout the operation.
Prior to installation of new sod, the scalped area shall be carefully shaped to proper grade and be thoroughly compacted. Wherever the construction operations have resulted in the placement of unsuitable or poorer soils in the area to be resodded, the surface shall be left low and covered with top soil.

The finished grade, after shaping and compacting the top soil, shall be thoroughly dampened prior to and immediately before replacing the sod. The sod shall be replaced to the required grade, taking care to butt each piece tightly against the adjacent one. Upon completion, the sod shall be dampened and rolled with a lawn roller.

All tools used shall be of the type specially designed for the work and be satisfactory to the Engineer. In no case shall sod be removed by the use of a mattock or other tool which will not meet requirements specified herein.

Sod shall be a 4-way blend of Ryegrasses as grown by J.B. SOD & SEED of Redmond, WA, or equivalent approved by the Engineer.

W5-31 BORING UNDER ROOTS

Boring under the root systems of trees (and plants) shall be accomplished by excavating a trench or pit on each side of the tree and then hand digging or pushing the pipe through the soil under the tree. The pit walls shall be a minimum of 7 feet from the center of the tree and shall be sufficient depth to lay the pipe at the grade shown on the plan and profile.

W5-32 HIGHWAY AND RAILROAD CROSSINGS

Interstate, state, or county highway and railroad crossings require the placing of steel, cast iron or concrete pipe casing by jacking or tunneling and laying the carrier pipe within the casing.

W5-33 BORING AND JACKING STEEL CASING

The Contractor shall verify the vertical and horizontal location of existing utilities. If required to avoid conflicts and maintain minimum clearances, adjustment shall be made to the grade of the casing.

The pipe shall be bored and jacked where indicated. The Contractor shall remove or penetrate all obstructions encountered. If groundwater is found to be a problem during boring operations, the Contractor shall do all that is necessary to control the flow sufficiently to protect the excavation, pipe and equipment so that the work is not impaired. Any pipe damaged during the boring and jacking operation shall be repaired by the Contractor in a manner approved by the Engineer.

Special care shall be taken during the installation of the bored and jacked pipe to ensure that no settlement or caving be caused to the above surface. Any such caving caused by the placement of the pipe shall be the Contractor's responsibility and he shall repair any area so affected as directed by the Engineer.

During the jacking operations, particular care shall be exercised to prevent caving ahead of the pipe which will cause voids outside of the pipe. If voids exist, the Contractor shall drill through the wall of the pipe and fill the voids with a pumped cement grout. All voids shall be filled to the satisfaction of the Engineer.

The carrier pipe shall be installed in the casing as shown on the drawings. The Contractor shall support carrier pipe with casing spacers as shown in the Standard Detail. The casing pipe shall not be backfilled with sand and grout. The casing ends shall be sealed with manufactured rubber end seal devices.

Boring pits shall be backfilled with select native material and compacted to 95% maximum dry density as determined by ASTM D-1557. The contractor shall provide sufficient select backfill material to make up for the rejected material.

All disturbed ground shall be restored to its original condition or better.

W5-34 WORKING WITH ASBESTOS CEMENT PIPE

When working with asbestos cement pipe, the Contractor is required to maintain workers' exposure to asbestos material at or below the exposure limit as prescribed in WAC 296-62-07705 State/Federal Guidelines and Certification.

W5-35 ASBESTOS CEMENT WATER MAIN CROSSINGS

Where new utility line crosses below an existing AC main, the AC pipe shall be replaced with DI pipe to 3 feet past each side of trench as shown on the Standard Detail. Alternatively, where directed by the Engineer, the trench shall be backfilled with controlled density fill (CDF, aka flowable fill) from bottom of trench to bottom of the AC main.

W5-36 VAULT INSTALLATION

Vaults for water facilities (pressure reducing station, water service, backflow assembly, etc.)

shall be constructed at the locations shown in the plan and as staked. It shall be constructed as shown in the plans, Standard Details and as directed by the Engineer.

The excavation shall have minimum one (1) foot clearance between the vault outer surfaces and the earth bank. The vault shall be placed on firm soil. If the foundation material is inadequate, the contractor shall use foundation gravel or bedding concrete to support the vault. The vault shall be plumb and watertight. The access cover shall be seated properly to prevent rocking and shall be adjusted to match the finished grade. Vault shall have coal tar coating of 5 to 9 mils applied to the exterior.

Vault floor shall drain to daylight, or to location shown on the plan. Drain pipe shall be minimum 4" diameter.

Where knockout locations for pipe do not coincide with locations of pipe penetrations into the vault, the Contractor shall core drill openings for pipe.

W5-37 CLEARANCES/OTHER UTILITIES

If the minimum vertical distance between utility pipes is less than 6-inches and such installation is approved by the City, a pad shall be placed between the pipes. The pad shall be O.D. x O.D. x 2.5 inches thick minimum or as required to protect the pipes. Above O.D. is equal to the outside diameter of the larger pipe. The pad shall be a polyethylene foam plank (Dow Plastics Ethafoam^{tm} 220), or approved equal. Additional measures may be necessary to ensure system integrity and may be required as evaluated by the City on a case by case basis.

END OF CHAPTER W5

CHAPTER W6 – SUMMARY OF UNDERGROUND FIRE SYSTEM INSTALLATION REQUIREMENTS FOR COMMERCIAL/MULTI-FAMILY PROJECTS (FOR SERVICES GREATER THAN 2 INCHES IN DIAMETER)

TABLE OF CONTENTS

W6-01 GENERAL ..... W6 - 1

W6-02 PERMITTING ..... W6 - 1

W6-03 INSTALLATION ..... W6 - 1

W6-04 INSPECTIONS ..... W6 - 1

W6-05 MATERIALS & CONSTRUCTION REQUIREMENTS ..... W6 - 2

CHAPTER W6 – SUMMARY OF UNDERGROUND FIRE SYSTEM INSTALLATION REQUIREMENTS FOR COMMERCIAL/MULTI-FAMILY PROJECTS (FOR SERVICES GREATER THAN 2 INCHES IN DIAMETER)

W6-01 GENERAL

Listed below is a summary of the requirements for the installation of underground fire lines in commercial and multi-family projects. A detailed listing of requirements can be found in Section 6-7, "Automatic Fire Sprinkler and Standpipe Systems" of the Fire Department's Construction Guidelines and the Utilities Department's Engineering Standards – water works section.

W6-02 PERMITTING

Installation of a dedicated fire service line from the municipal water main to the building floor flange and underground fire sprinkler piping and appurtenances (e.g. FDC's) shall be accomplished under a Utility Developer Extension Agreement (UE).

W6-03 INSTALLATION

Contractor must be a Level "U" or Level III licensed contractor in accordance with RCW 18-160 and WAC 212-80 to install any portion of the fire sprinkler underground piping. Developer shall submit proof of Contractor's Certificate of Competency Holder and fire sprinkler system licensing prior to permit issuance. State law does not allow a licensed contractor to subcontract fire sprinkler system installation to an unlicensed contractor.

W6-04 INSPECTIONS

Utilities Inspectors will inspect and test the underground fire lines:

(1) DCVA Inside the Building – from the municipal water main to within five (5) feet of the building foundation; and

(2) DCVA Outside the Building – from the municipal water main to the downstream flange on the DCVA.

Wall-mounted PIV's and FDC's , as well as interior DCVA's and swing check valves will be inspected by the Fire Department under a separate permit.

Connections and fittings shall not be backfilled prior to inspection.

Pressure test – 225 psi for two hours, or 50 psi in excess of working pressures, whichever is

greater, with no loss between the gate valve on the municipal water main and the floor flange.

Bag Flush – In the presence of the Fire Inspector, first charge the service line from a fire hydrant (Standard Detail W-9) through the FDC and flush out the floor flange. Next, flush the entire fire line out at the floor flange.

The flush must be witnessed by the Fire Inspector. The fire line shall be flushed for a minimum of 15 minutes at scouring velocities unless otherwise directed by the Inspector. If debris is detected in the bag, additional test(s) shall be performed until the debris has been cleared from the line.

Disinfection and Purity Test – See Utilities Engineering Standards Section W5-17.

Inspection processes and approved materials may be different outside the Bellevue city limits (e.g. Clyde Hill, Medina, Hunts Point, etc.). New backflow assembly test reports from outside of Bellevue city limits must be submitted to Bellevue Utilities, 425-452-5208.

W6-05 MATERIALS & CONSTRUCTION REQUIREMENTS

W6-05.1 General

Minimum depth of cover for all piping is 3 feet.

Maximum depth of cover for all piping is 6 feet.

W6-05.2 Pipe

Ductile Iron Pipe, Class 52, cement mortar lined or epoxy coated. See Utilities Engineering Standards Section W4-02.

Polyethylene encasement, 8 mil thickness minimum. See Utilities Engineering Standards Section W4-03.

All pipe shall have restrained joints (See Utilities Engineering Standards Section W4-28). Field lock gaskets are not allowed.

Casings are required under walls and footings. See Utilities Engineering Standards Section W4-36 and W4-37.

W6-05.3 Fittings

Ductile Iron, Class 52, compact type, cement mortar lined or epoxy coated. See Utilities Engineering Standards Section W4-04.

All fittings shall have restrained joints (See Utilities Engineering Standards Section W4-

28) and concrete thrust blocking. Dual restraint is required on all changes in direction. "Field-Lok" gaskets as manufactured by V.S. Pipe and Foundry are not allowed.

Cement concrete blocking is required at all changes in direction (Standard Details W-1, W-2, and W-3).

W6-05.4 Double Check Valve Assembly (DCVA)

Assembly must be installed in the orientation approved by the Washington State Department of Health. See Utilities Engineering Standards Section W4-31 and Standard Detail W-45.

W6-05.5 (Not Used)

W6-05.6 Post Indicator Valve (PIV)

Location – PIV shall be set on the fire service line between the easement/property line and the point of connection of the FDC on the fire service line.

Clearance – 3 feet from obstructions, vegetation, fencing, structures, curb line, and edge of sidewalk; 5 feet from protective bollards.

PIV – Listed for fire protection service, rated for 200 psi test pressure.

Paint – 2 coats of Rust-Oleum Regal Red over primer.

W6-05.7 Bollards

Bollards are required when the PIV or FDC may be subject to vehicular damage. Install6-inch diameter minimum, Schedule 40 iron pipe or Class 52 DI pipe, filled with Class 3000 concrete.

Height – equal to or higher than the height of the FDC or PIV.

Embedment – 3 foot depth in a 15-inch diameter concrete footing.

Spacing – sufficient to protect the FDC or PIV spaced not more than 4 feet apart.

Paint – 2 coats of Rust-Oleum Regal Red over primer.

W6-05.8 Tamper Protection

Tamper (supervisory) switches shall be installed on PIV's and DCVA's.

Electrical conduits penetrating vault walls shall be neatly cored or drilled and the annular space grouted, inside and out, to prevent seepage.

A vault drain (gravity to storm drain or sump pump – no dry wells) is required if tamper switches and wiring are not waterproof.

Tamper protection will be inspected by Fire Department under the fire sprinkler permit (FB).

END OF CHAPTER W6

APPENDIX W-1

WATER WORKS STANDARD DETAILS

CONCRETE BLOCKING W-1

VERTICAL BLOCKING WITH RESTRAINED JOINTS FOR NEW LINES W-2

VERTICAL BLOCKING FOR CONNECTING TO EXISTING MAIN W-3

CONCRETE SLOPE ANCHOR DETAIL W-4

PIPE CLAMP AND ANCHOR RODS FOR CONCRETE BLOCKING W-5

TYPICAL TRENCH DETAIL W-6

CASING INSTALLATION W-7

TYPICAL A.C. WATER MAIN
CROSSING REPLACEMENT DETAIL W-8

FILLING NEW WATER MAINS W-9

TAPPING TEES W-10

VALVE BOX INSTALLATION W-11

VALVE OPERATING EXTENSION W-12

FIRE HYDRANT ASSEMBLY W-13

FIRE HYDRANT GUARD POST & VALVE MARKER POST W-14

2" BLOW-OFF ASSEMBLY W-15

1" AIR & VACUUM RELEASE VALVE ASSEMBLY W-16

STANDARD PRESSURE REDUCING STATION W-17

TYPICAL P.R.V. SCHEMATIC W-18

PRESSURE REDUCING STATION ACCESS LADDER AND
PRESSURE RELIEF DRAIN W-19

INDIVIDUAL PRESSURE REDUCING VALVE ASSEMBLY (RESIDENTIAL) W-20

INDIVIDUAL PRESSURE REDUCING VALVE ASSEMBLY
(MULTI-FAMILY OR COMMERCIAL) W-21

INDIVIDUAL PRESSURE REDUCING VALVE ASSEMBLY WITH
PRESSURE RELIEF (MULTI-FAMILY OR COMMERCIAL) W-22

1"X 1" SINGLE WATER SERVICE OR DOMESTIC IRRIGATION SERVICE
(HORIZONTAL METER SETTER) W-23

1" X 1" SINGLE WATER SERVICE OR DOMESTIC IRRIGATION SERVICE
(VERTICAL METER SETTER) W-24

1 1/2" DOMESTIC WATER AND/OR FIRE SERVICE W-25

1 1/2" DOMESTIC WATER SERVICE (COMMERCIAL AND MULTI-FAMILY) W-26

1 1/2" IRRIGATION WATER SERVICE W-27

1 1/2" IRRIGATION WATER SERVICE
(COMMERCIAL AND MULTI-FAMILY) W-28

2" DOMESTIC WATER AND/OR FIRE SERVICE W-29

2" DOMESTIC WATER SERVICE (COMMERCIAL AND MULTI-FAMILY) W-30

2" IRRIGATION WATER SERVICE W-31

2" IRRIGATION OR FIRE SPRINKLER WATER SERVICE
(COMMERCIAL AND MULTI-FAMILY) W-32

3" TO 6" DOMESTIC METER INSTALLATION W-33

8" DOMESTIC METER INSTALLATION W-34

3" TO 6" IRRIGATION METER INSTALLATION W-35

1" TO 2" DOUBLE CHECK VALVE ASSEMBLY FOR IRRIGATION SYSTEMS
(OUTSIDE INSTALLATION) W-36

INSIDE DCVA INSTALLATION FOR RESIDENTIAL FIRE
SPRINKLER SYSTEMS W-37

DOUBLE CHECK VALVE ASSEMBLY (INSIDE INSTALLATION) W-38

OUTSIDE DCVA INSTALLATION FOR 1 1/2" AND 2"
COMMERCIAL FIRE SPRINKLER SYSTEMS W-39

OUTSIDE DCVA INSTALLATION FOR 3" AND LARGER COMMERCIAL FIRE
SPRINKLER SYSTEMS W-40

1 1/2" AND 2" DOMESTIC DOUBLE CHECK VALVE ASSEMBLY FOR
CONTINUOUS SUPPLY (OUTSIDE INSTALLATION) W-41

3" TO 6" DOMESTIC DOUBLE CHECK VALVE ASSEMBLY
FOR CONTINUOUS SUPPLY (OUTSIDE INSTALLATION) W-42

8" AND 10" DOMESTIC DOUBLE CHECK VALVE ASSEMBLY
FOR CONTINUOUS SUPPLY (OUTSIDE INSTALLATION) W-43

3" TO 10" DOUBLE CHECK VALVE ASSEMBLY FOR DOMESTIC AND
IRRIGATION SERVICES (OUTSIDE INSTALLATION) W-44

3" TO 10" DOUBLE CHECK DETECTOR ASSEMBLY FOR FIRE SPRINKLER
SYSTEMS (OUTSIDE INSTALLATION) W-45
REDUCED PRESSURE BACKFLOW ASSEMBLY FOR DOMESTIC AND
IRRIGATION SERVICES (OUTSIDE INSTALLATION) W-46A

3" TO 10" REDUCED PRESSURE BACKFLOW ASSEMBLY FOR DOMESTIC AND
IRRIGATION SERVICES (BURIED VAULT INSTALLATION) W-46B

3" TO 10" REDUCED PRESSURE DETECTOR ASSEMBLY FOR FIRE SPRINKLER
SYSTEM (OUTSIDE INSTALLATION) W-47

REDUCED PRESSURE BACKFLOW ASSEMBLY FOR DOMESTIC AND IRRIGATION
SERVICE (INSIDE INSTALLATION) W-48

REQUIREMENTS FOR FDC AND CHECK VALVE ROUTED THROUGH BACKFLOW
ASSEMBLY VAULT – 1 ..... W-49

REQUIREMENTS FOR FDC AND CHECK VALVE ROUTED THROUGH BACKFLOW
ASSEMBLY VAULT – 2 ..... W-50

NOT USED W-51

NOT USED W-52

PROJECT SIGN DETAIL W-53

ROADWAY CLEARANCES FOR ABOVE GROUND APPURTENANCES W-54

FIRELINE VALVE MARKER W-55

THRUST BLOCK ADJACENT TO VAULT W-56

THRUST BLOCK – TABLE							
		MINIMUM BEARING AREA AGAINST UNDISTURBED SOIL SQUARE FEET					
PIPE SIZE	PRESSURE PSI	A	B	C	D	E	X (100 PSI)
4"	200 300	2/(1) 3/(2)	1/(NONE) 2/(2)	1/(NONE) 2/(1)	NONE 1/(1)	NONE NONE	NONE
6"	200 300	4/(3) 6/(4)	3/(2) 4/(3)	3/(1) 3/(2)	1/(1) 2/(1)	1/(NONE) 1/(NONE)	NONE
8"	200 300	7/(5) 11/(8)	5/(3) 8/(5)	4/(3) 6/(4)	2/(2) 3/(2)	1/(1) 2/(1)	3/(2)
10"	200 275	11/(8) 16/(11)	8/(6) 11/(7)	6/(4) 9/(6)	3/(2) 5/(3)	2/(1) 3/(2)	4/(3)
12"	200 250	16/(11) 24/(16)	11/(8) 17/(11)	9/(6) 13/(9)	5/(3) 7/(5)	3/(2) 4/(3)	5/(4)
14"	200 250	22/(13) 33/(22)	16/(11) 23/(16)	12/(8) 18/(12)	6/(4) 9/(6)	3/(2) 5/(3)	7/(6)
16"	200 225	29/(19) 32/(21)	21/(14) 23/(16)	16/(11) 17/(12)	8/(6) 9/(6)	5/(3) 5/(3)	10/(7)
18"	200	36/(24)	26/(17)	20/(13)	10/(7)	5/(4)	13/(9)
20"	200	45/(29)	32/(21)	24/(16)	13/(8)	7/(4)	16/(11)
24"	200	64/(43)	46/(30)	35/(23)	18/(12)	9/(6)	23/(16)

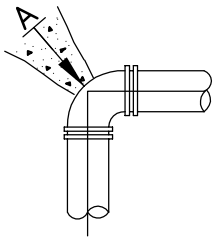

90° BEND

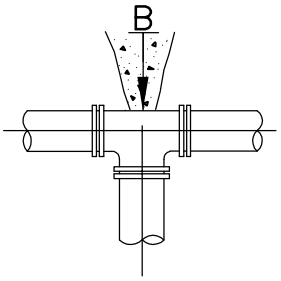

TEE

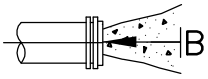

CAP

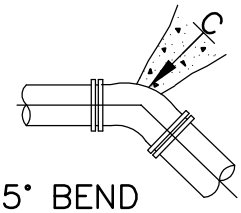

45° BEND

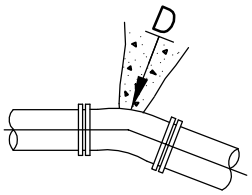

22 1/2° BEND

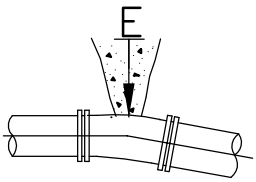

11 1/4° BEND

SAFE BEARING LOADS IN LB./SQ. FT.
THE SAFE BEARING LOADS GIVEN IN THE FOLLOWING TABLE ARE FOR HORIZONTAL THRUSTS WHEN THE DEPTH OF COVER OVER THE PIPE EXCEEDS 2 FEET.

SOIL	SAFE BEARING LOAD LB. PER SQ. FT.
* MUCK, PEAT, ETC.	0
SOFT CLAY	1,000
SAND	2,000
SAND & GRAVEL	3,000
SAND & GRAVEL CEMENTED WITH CLAY	4,000
HARD SHALE	10,000

* IN MUCK OR PEAT, ALL THRUSTS SHALL BE RESTRAINED BY PILES OR TIE RODS TO SOLID FOUNDATIONS OR BY REMOVAL OF MUCK OR PEAT AND REPLACEMENT WITH BALLAST OF SUFFICIENT STABILITY TO RESIST THRUST.

NOTES:
1. SQUARE FEET OF CONCRETE THRUSTS – BLOCK AREA BASED ON SAFE BEARING LOAD OF 2000/(3000) POUNDS PER SQUARE FOOT.
2. AREAS MUST BE ADJUSTED FOR OTHER SIZE PIPE, PRESSURES & SOIL CONDITIONS.
3. CONCRETE BLOCKING SHALL BE CAST IN PLACE & HAVE MINIMUM OF 1/4 SQUARE FOOT BEARING AGAINST THE FITTING.
4. BLOCK SHALL BEAR AGAINST FITTINGS ONLY & SHALL BE CLEAR OF JOINTS TO PERMIT TAKING UP OR DISMANTLING JOINT.
5. CONTRACTOR SHALL INSTALL BLOCKING ADEQUATE TO WITHSTAND FULL TEST PRESSURE AS WELL AS TO CONTINUOUSLY WITHSTAND OPERATING PRESSURE UNDER ALL CONDITIONS OF SERVICE.

City of Bellevue

WATER UTILITY

TITLE

CONCRETE BLOCKING

JANUARY 2013

NO SCALE

NO. W-1

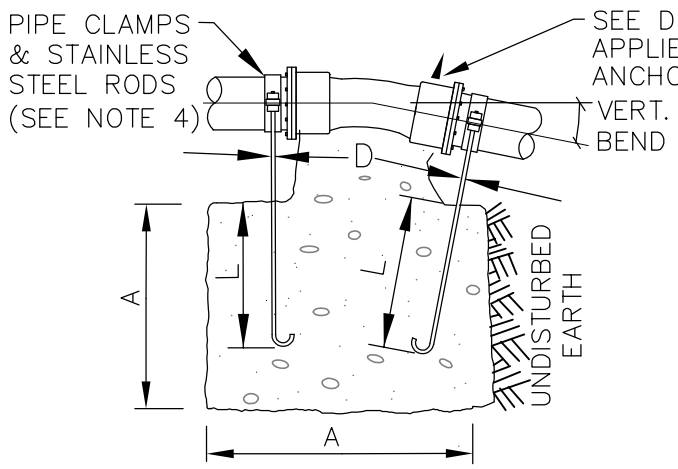

VERTICAL BLOCKING
11 1/4° & 22 1/2° BENDS

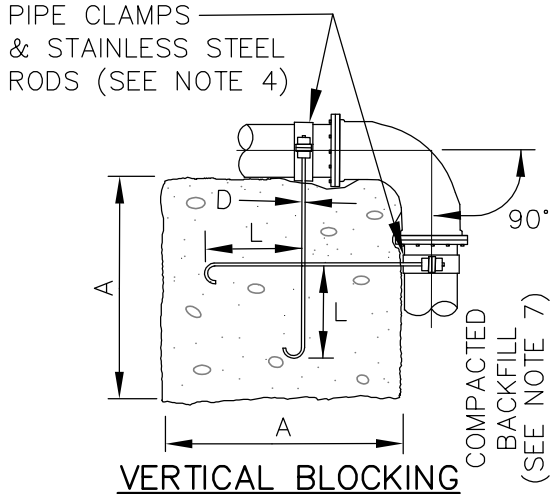

VERTICAL BLOCKING
FOR 90° BENDS
(SEE NOTE 6)

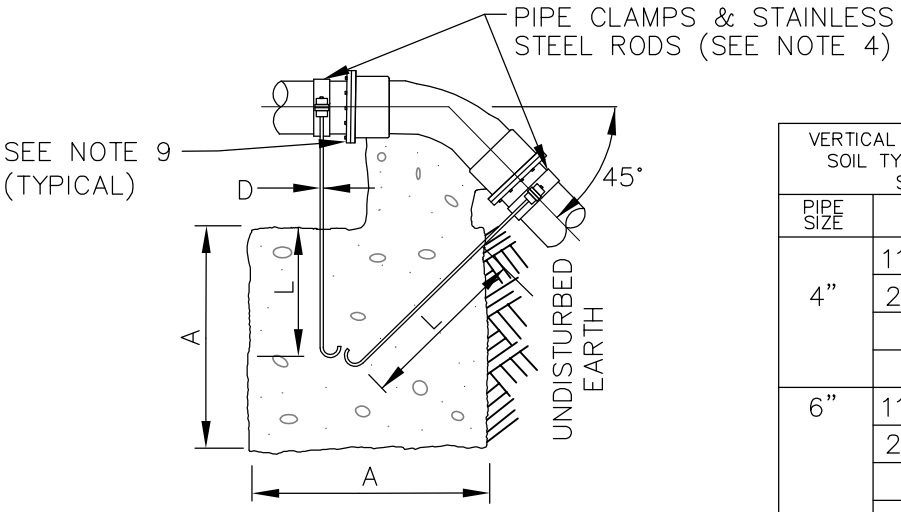

VERTICAL BLOCKING
FOR 45° BENDS

VERTICAL BLOCKING SIZE W/RESTRAINED JOINTS SOIL TYPE = COHESIVE GRANULAR [GC+SC] SAND, GRAVEL, CLAY MIXTURE					
PIPE SIZE	V B	CU FT	A	D	L
4"	11 1/4°	*			
	22 1/2°	*			
	45°	*			
	90°	16	2.5'	3/4"	2.0'
6"	11 1/4°	*			
	22 1/2°	*			
	45°	13	2.3'	3/4"	2.0'
	90°	43	3.5'	3/4"	2.0'
8"	11 1/4°	*			
	22 1/2°	*			
	45°	33	3.2'	3/4"	2.0'
	90°	86	4.4'	3/4"	2.0'
10"	11 1/4°	*			
	22 1/2°	13	2.3'	3/4"	2.0'
	45°	64	4.0'	3/4"	2.0'
	90°	141	5.2'	1"	3.5'
12"	11 1/4°	*			
	22 1/2°	20	2.7'	3/4"	2.0'
	45°	111	4.8'	3/4"	2.0'
	90°	206	5.9'	1 1/8"	4.0'

* BLOCKING NOT REQUIRED IF 36 FEET OF PIPE IS RESTRAINED ON EACH SIDE OF BEND.

NOTES:

1. NO CHANGE IN PIPE DIRECTION OR DIAMETER SHALL OCCUR WITHIN 36 FEET OF THE VERTICAL BEND. BENDS, TEES, REDUCERS, ETC. BEYOND THE 36 FOOT LIMIT SHALL BE RESTRAINED BY STANDARD CONCRETE BLOCKING PER STD. DTL. W-1 & W-3.
2. CONCRETE BLOCKING SIZES BASED ON:
   - 36 FEET OF PIPE RESTRAINED EACH SIDE OF BEND.
   - THRUST BLOCK AREAS BASED ON SAFE BEARING LOAD OF 1,000 PSF.
   - 2,500 PSI CONCRETE.
   - MINIMUM 3 FEET OF COVER.
   - PIPE THRUST BASED ON 200 PSI PRESSURE.
   - PIPE ENCASED IN POLYETHYLENE.
   - VERTICAL BLOCK SIZE BASED ON CONCRETE WEIGHT OF 150 POUNDS PER CUBIC FOOT.
   - TRENCH CONDITIONS BASED ON TYPE 2, FLAT BOTTOM TRENCH WITH LIGHTLY CONSOLIDATED BACKFILL, PER ANSI/AWWA C150/A21.50.
   - FACTOR OF SAFETY IS 1.5.
   - SOIL FRICTIONAL RESISTANCE BASED ON COHESIVE GRANULAR SOIL TYPE (GC+SC). SAND, GRAVEL, CLAY MIXTURE.
3. BLOCKING DESIGN MUST BE ADJUSTED FOR OTHER SIZE PIPE, PRESSURES AND SOIL CONDITIONS.
4. PIPE CLAMP (STAINLESS STEEL TOLCO 4H 316SS). RODS (STAINLESS STEEL ALL-THREAD 316SS)
5. LINE SHALL NOT BE PRESSURIZED UNTIL ALL TRENCHING WITHIN 100 FEET OF VERTICAL BEND IS BACKFILLED AND COMPACTED TO MINIMUM COVER OF 3 FEET OVER PIPE.
6. 90° VERTICAL BENDS SHALL ONLY BE INSTALLED WHERE GIVEN PRIOR APPROVAL BY THE UTILITY.
7. BACKFILL TRENCH BEYOND 90° VERTICAL BLOCK WITH CRUSHED SURFACING TOP COURSE MATERIAL COMPACTED TO 95% MAXIMUM DENSITY. CRUSHED BACKFILL SHALL EXTEND 20 FEET BEYOND BLOCK OR TO FIRM BEARING TRENCH WALL, WHICHEVER IS LESS.
8. LEAVE BLOCK OPEN OR SHEETED 24 HOURS MINIMUM.
9. MEGA-LUG FITTINGS.

JANUARY 2013 NO SCALE

City of Bellevue

VERTICAL BLOCKING
WITH RESTRAINED JOINTS
FOR NEW LINES

NO. W-2

VERTICAL BLOCKING FOR 11 1/4°–22 1/2°–30° BENDS					
PIPE SIZE	V B	CU FT	A	D	L
4"	11 1/4°	8	2.0'	3/4"	1.5'
	22 1/2°	11	2.2'		2.0'
	30°	17	2.6'		
6"	11 1/4°	11	2.2'	3/4"	2.0'
	22 1/2°	25	2.9'		
	30°	41	3.5'		
8"	11 1/4°	16	2.5'	3/4"	2.0'
	22 1/2°	47	3.6'		
	30°	70	4.1'	3/4"	2.5'
12"	11 1/4°	32	3.2'	3/4"	2.0'
	22 1/2°	88	4.5'	7/8"	3.0'
	30°	132	5.1'		
16"	11 1/4°	70	4.1'	7/8"	3.0'
	22 1/2°	184	5.7'	1 1/8"	4.0'
	30°	275	6.5'	1 1/4"	
20"	11 1/4°	91	4.5'	7/8"	3.0'
	22 1/2°	225	6.1'	1 1/4"	4.0'
	30°	330	6.9'	1 3/8"	4.5'
24"	11 1/4°	128	5.0'	1"	3.5'
	22 1/2°	320	6.8'	1 3/8"	4.5'
	30°	480	7.9'	1 5/8"	5.5'
VERTICAL BLOCKING FOR 45° BENDS					
4"	45°	30	3.1'	3/4"	2.0'
6"		68	4.1'		
8"		123	5.0'		
12"		232	6.1'	3/4"	2.5'
16"		478	7.8'	1 1/8"	4.0'
20"		560	8.2'	1 1/4"	
24"		820	9.4'	1 3/8"	4.5'

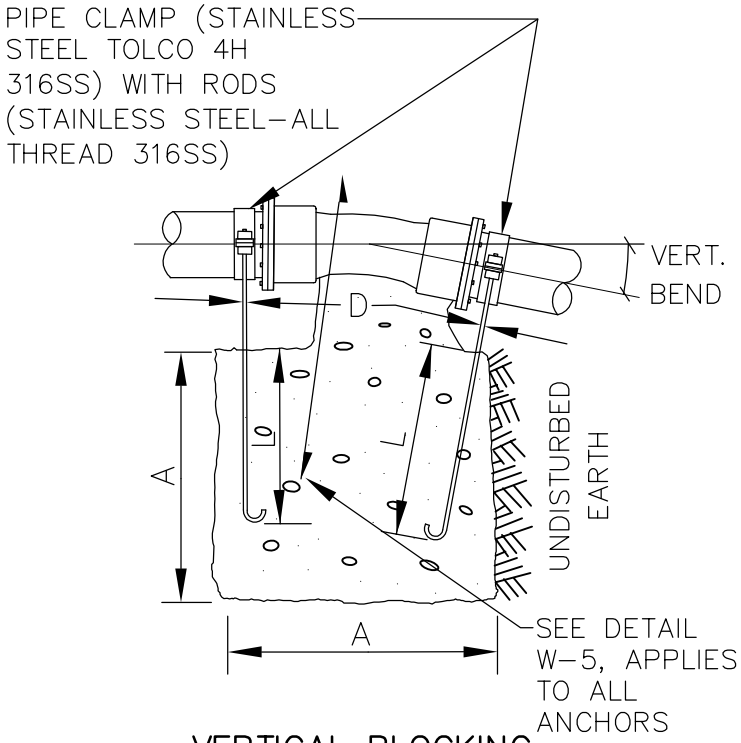

VERTICAL BLOCKING
FOR 11 1/4°, 22 1/2°, & 30° BENDS

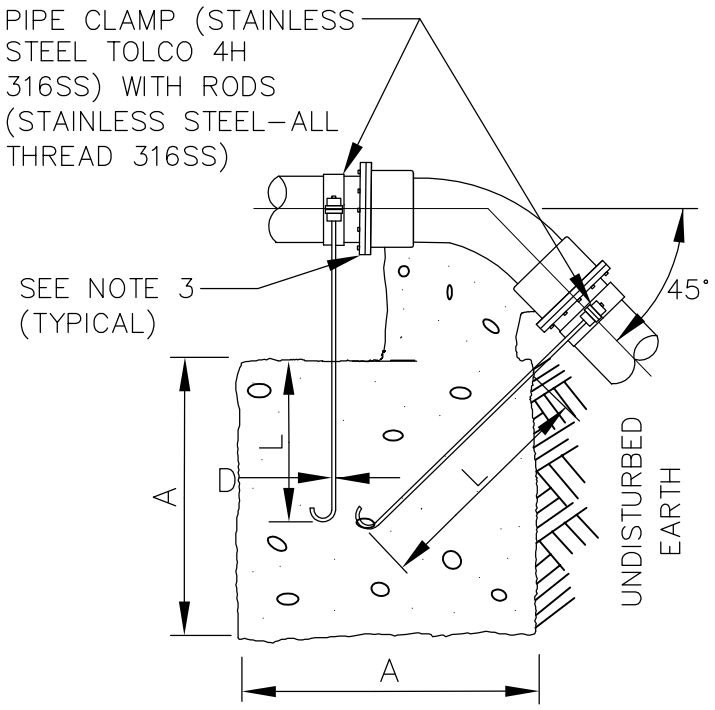

VERTICAL BLOCKING
FOR 45° BENDS

NOTES:

1. CONCRETE BLOCKING BASED ON 200 PSI PRESSURE AND 2500 PSI CONCRETE.
2. LEAVE BLOCK OPEN OR SHEETED 24 HOURS MINIMUM.
3. MEGA–LUG FITTINGS.

JANUARY 2013 NO SCALE

City of Bellevue

VERTICAL BLOCKING
FOR CONNECTING TO
EXISTING MAIN

NO. W–3

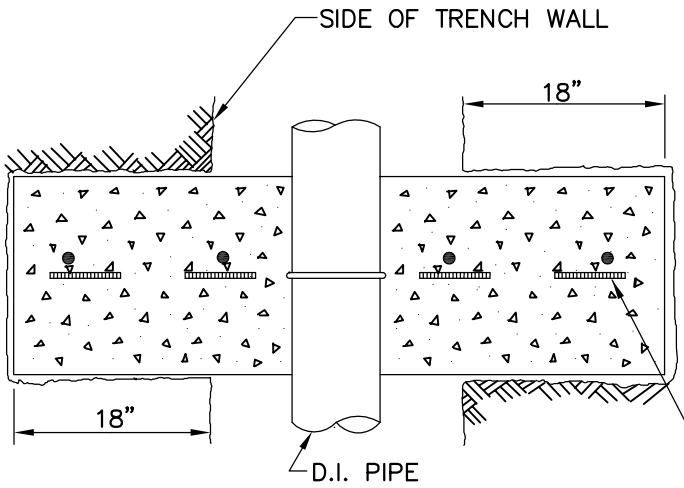

PIPE SIZE	DIMENSIONS (INCHES)				
	A	B	C	D	E
4"	2.4	4.8	17	13	14.6
6"	3.5	6.9	18	14	14.5
8"	4.5	9.1	19	15	14.5
10"	5.6	11.1	20	16	14.4
12"	6.6	13.2	21	17	14.4
14"	7.7	15.3	22	18	14.3
16"	8.7	17.4	23	19	14.3
18"	9.8	19.5	24	20	14.2

SINGLE MAT #4'S @ 12" O.C.
BW – 3" COVER ALL WAYS

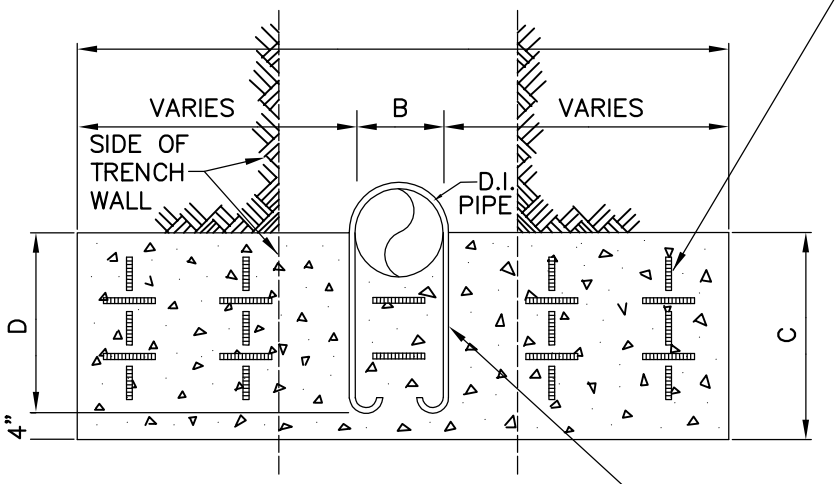

PIPE CLAMP AND J–BOLT OR ALL–THREAD WITH NUTS AND WASHERS PER DETAIL W–5

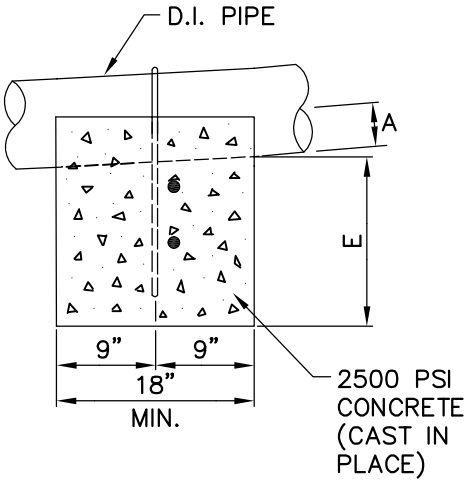

SLOPES > 20% – PROVIDE CONCRETE SLOPE ANCHORS (20' TO 25' ON CNTR.)

City of Bellevue

CONCRETE SLOPE ANCHOR DETAIL

JANUARY 2013

NO SCALE

NO. W–4

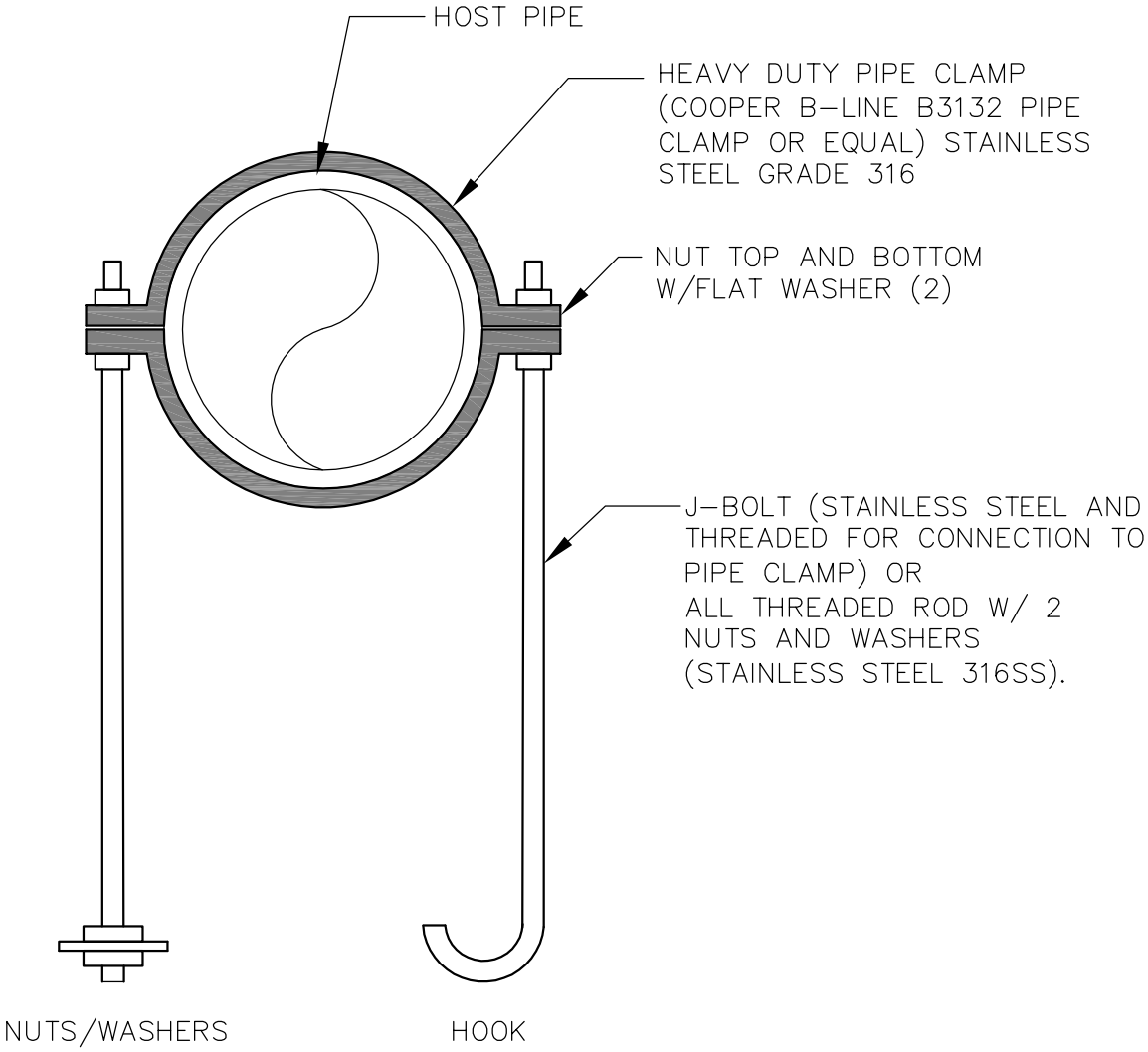

NOTES:

1. J-BOLT DIAMETER:
   - PIPE DIAMETER LESS THAN OR EQUAL TO 6": 7/8", 6" & 8" PIPE: 1", 10" = 1-1/4".
   - PIPE DIAMETER GREATER THAN 12": 1-1/2".
2. TIGHTEN TOP NUTS TO TENSION BOLTS.
3. TIGHTEN LOWER NUTS TO COMPRESS CLAMP SNUG.

City of Bellevue

WATER UTILITY

TITLE

PIPE CLAMP AND ANCHOR RODS FOR CONCRETE BLOCKING

JANUARY 2013

NO SCALE

NO. W-5

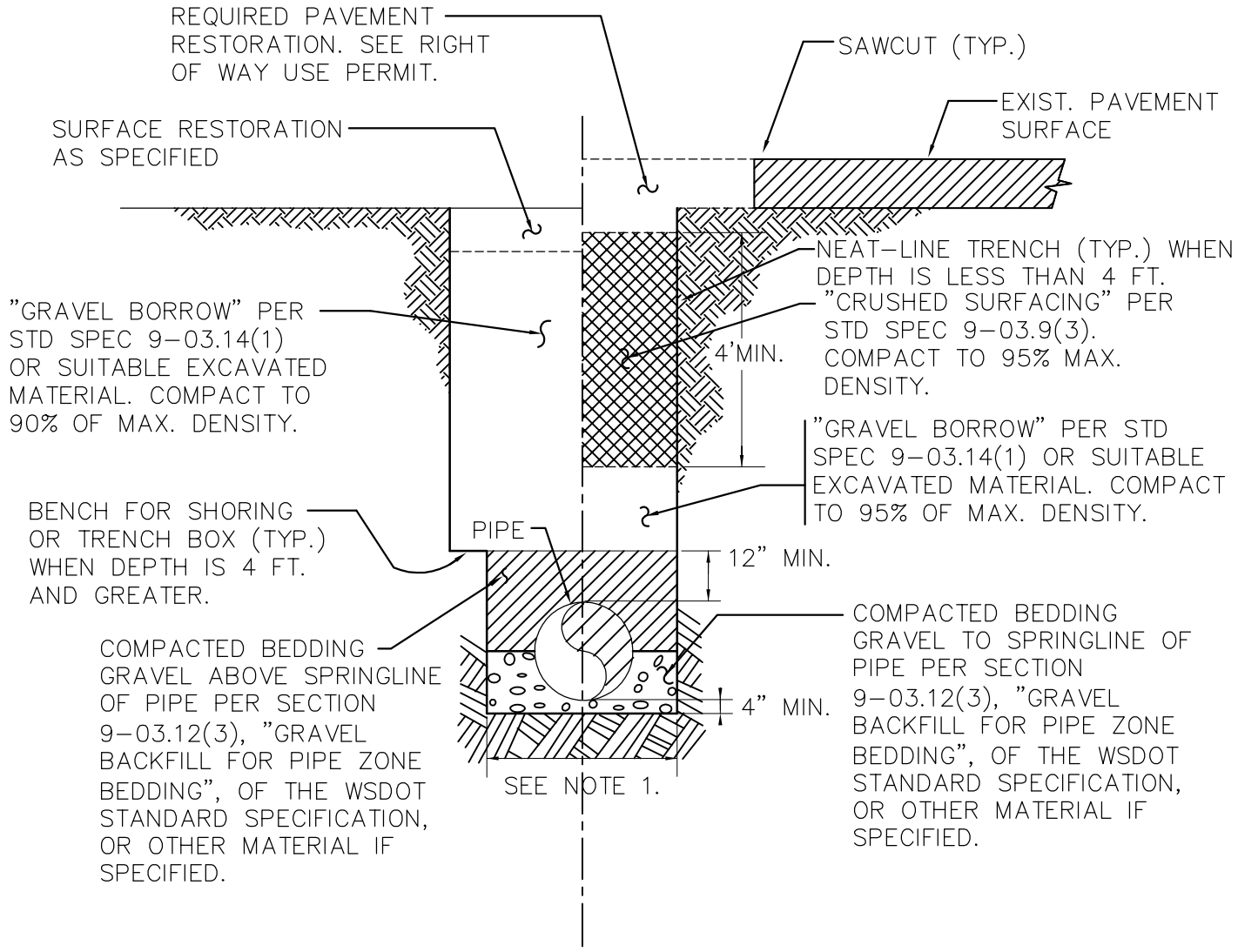

NOTES:

1. MAXIMUM WIDTH OF TRENCH AT TOP OF PIPE:
   * 36" FOR PIPE UP TO AND INCLUDING 12" NOMINAL DIAMETER.
   * I.D. PLUS 18" FOR PIPE LARGER THAN 12" NOMINAL DIAMETER.
2. EXCAVATIONS OVER 4' DEEP SHALL COMPLY WITH THE SAFETY STANDARDS DESCRIBED IN CHAPTER 296-155, PART N OF THE WAC.
3. SEE "BEDDING, BACKFILL AND COMPACTION" IN CHAPTER W5 OF THE ENGINEERING STANDARDS FOR ADDITIONAL CONSTRUCTION REQUIREMENTS.

City of Bellevue

WATER UTILITY

TITLE

TYPICAL TRENCH DETAIL

JANUARY 2013

NO SCALE

NO. W-6

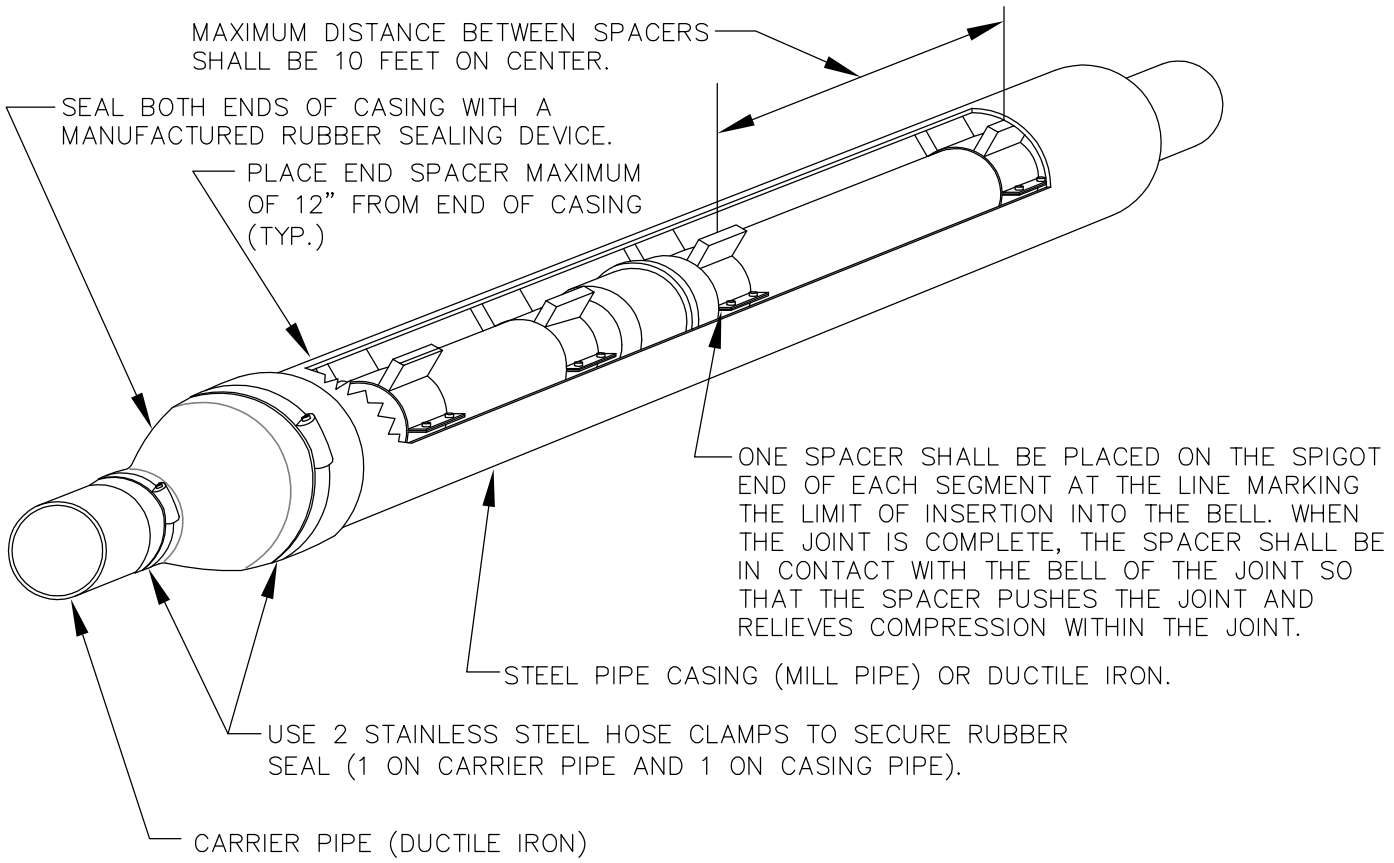

CASING SPACERS (SEE APPROVED MATERIALS LIST)

CARRIER PIPE DIAMETER	4"	6"	8"	10"	12"
CASING DIAMETER (PUSH-ON JOINT CARRIER PIPE)	10"	12"	14"	16"	20"
CASING DIAMETER (MJ/MEGALUG JOINT CARRIER PIPE)	14"	16"	18"	20"	22"*
STEEL CASING THICKNESS	0.25"	0.25"	0.25"	0.25"	0.25"
SPACER BAND WIDTH	8"	8"	8"	8"	8"

NOTES: * 24" FOR DUCTILE IRON CASING.

1. CASING SPACERS SHALL BE "CENTER POSITIONING" TYPE.
2. MINIMUM RUNNER WIDTH SHALL BE 2 INCHES.
3. RUNNER HEIGHT SHALL BE SIZED TO PROVIDE:
   A. MINIMUM 0.75" BETWEEN CARRIER PIPE BELL AND CASING PIPE WALL AT ALL TIMES.
   B. MINIMUM 1" CLEARANCE BETWEEN RUNNERS AND TOP OF CASING WALL TO PREVENT JAMMING DURING INSTALLATION.
4. STEEL CASING DIAMETERS ARE "OUTSIDE DIAMETER" FOR 16" AND LARGER.
5. SPACER BAND WIDTH SHALL BE 12" FOR CARRIER PIPES THAT ARE 36" DIAMETER OR GREATER.
6. FOR STEEL CASING, PROVIDE SHOP-APPLIED ANTI-CORROSIVE COATING ON CASING EXTERIOR CONFORMING TO AWWA C210. MINIMUM COATING THICKNESS 16 MILS DFT (DO NOT EXCEED MANUFACTURER'S MAXIMUM THICKNESS). PRODUCT SHALL BE EQUAL TO TNEMEC HI-BUILD TNEME-TAR SERIES 46H-413.

JANUARY 2013 NO SCALE

City of Bellevue

WATER UTILITY

TITLE

CASING INSTALLATION

NO. W-7

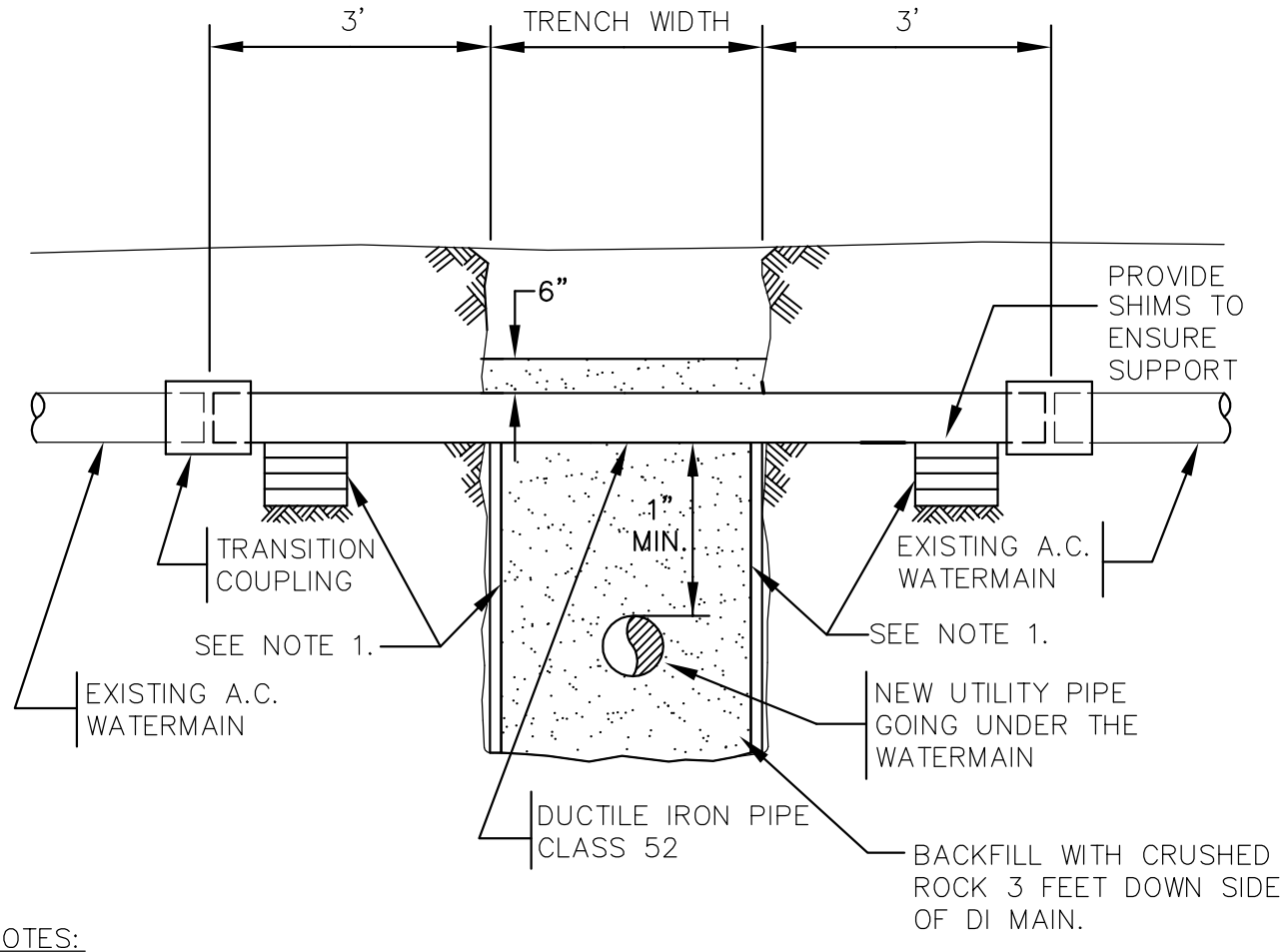

NOTES:

1. D.I. PIPE SHALL REST ON FIRM BEARING EARTH: SHORE TRENCH WALL UNDER WATERMAIN AS SHOWN, OR SUPPORT PIPE WITH PATIO BLOCKS (8"x16"X 2"). STACK BLOCKS AS REQUIRED TO REST ON FIRM BEARING SOIL.
2. WRAP DUCTILE IRON PIPE AND TRANSITION COUPLINGS WITH 8 MIL POLYETHYLENE CONFORMING TO AWWA C-105.
3. THE CONTRACTOR IS REQUIRED TO MAINTAIN WORKERS' EXPOSURE TO ASBESTOS MATERIAL AT OR BELOW THE LIMIT PRESCRIBED IN WAC 296-62-07705.
4. ASBESTOS CEMENT PIPE SHALL BE CUT WITH A HAND-OPERATED CARBIDE BLADE CUTTER WITH CONTROLLED FLOWING WATER.
5. CONTAMINATED CLOTHING SHALL BE LEFT AND BURIED IN TRENCH, OR TRANSPORTED IN SEALED IMPERMEABLE BAGS & LABELED IN ACCORDANCE WITH WAC 296-62-07721. ASBESTOS CEMENT PIPE SHALL BE LEFT AND BURIED IN TRENCH.

City of Bellevue

WATER UTILITY

TITLE

TYPICAL A.C. WATERMAIN CROSSING REPLACEMENT DETAIL

JANUARY 2013

NO SCALE

NO. W-8

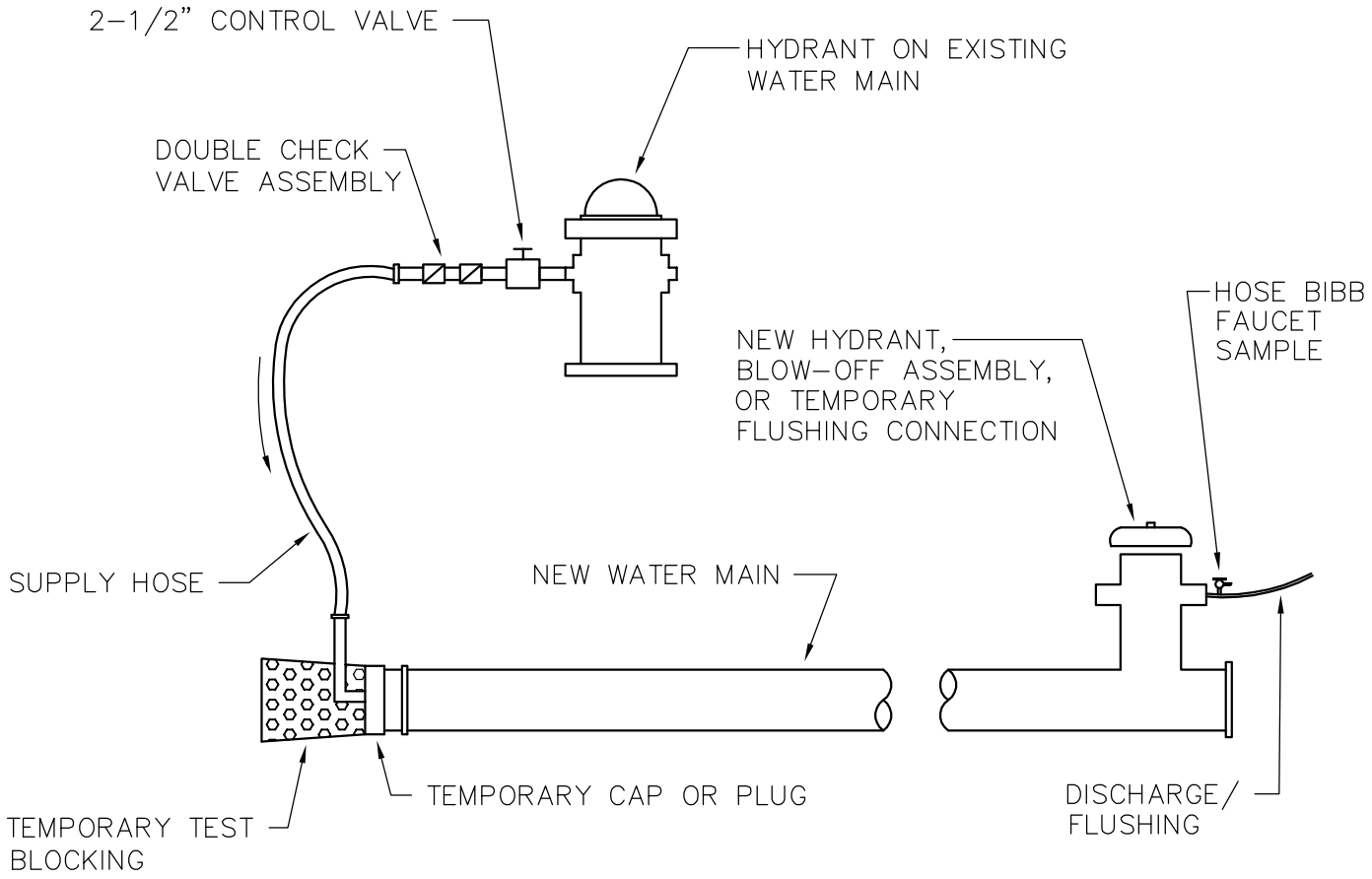

NOTES:

1. AN APPROVED BACKFLOW PREVENTION ASSEMBLY SHALL BE INSTALLED BETWEEN THE EXISTING AND NEW WATER LINES DURING DISINFECTION AND FLUSHING OF NEW WATERMAIN.

2. THE BACKFLOW PREVENTION ASSEMBLY AND SUPPLY HOSE MUST BE DISCONNECTED DURING HYDROSTATIC PRESSURE TESTING OF THE NEW MAIN.

3. THE NEW WATERMAIN SHALL BE CONNECTED TO THE EXISTING SYSTEM ONLY AFTER NEW MAIN IS FLUSHED, DISINFECTED AND SATISFACTORY BACTERIOLOGICAL SAMPLE RESULTS ARE OBTAINED.

4. THE INTERIORS OF ALL PIPES AND FITTINGS TO BE USED IN FINAL CONNECTION MUST BE SWABBED OR SPRAYED WITH A 1% AVAILABLE CHLORINE SOLUTION.

City of Bellevue

WATER UTILITY

TITLE

FILLING NEW WATER MAINS

JANUARY 2013

NO SCALE

NO. W-9

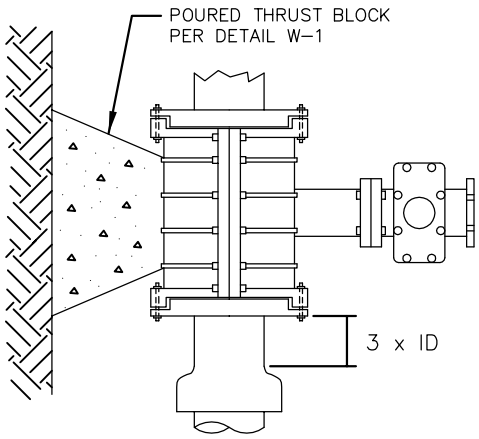

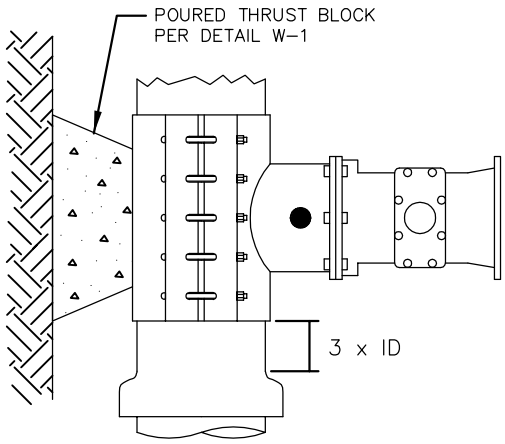

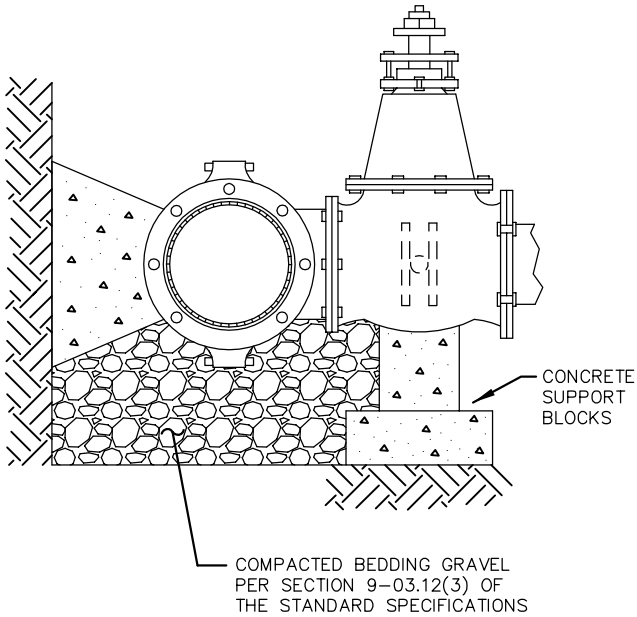

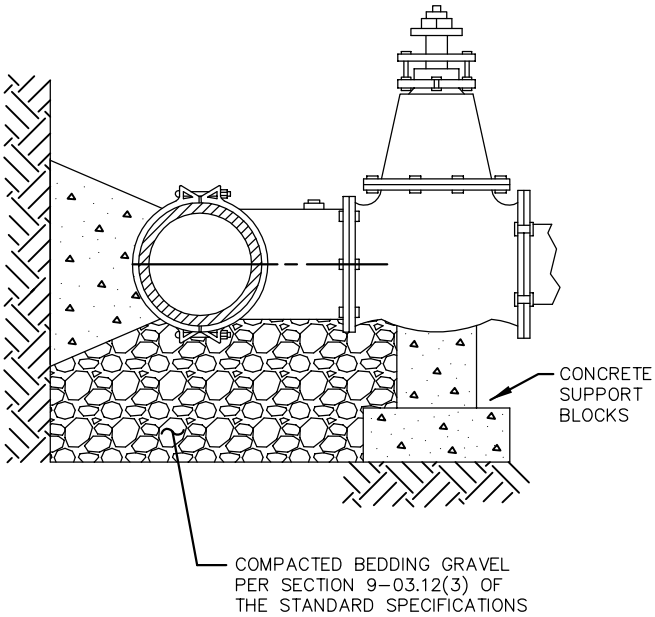

DUTILE IRON TAPPING TEE MECHANICAL JOINT SLEEVE

INSTALLED ON ASBESTOS CEMENT PIPE, CAST IRON PIPE AND DUCTILE IRON PIPE.

STAINLESS STEEL OR STEEL TAPPING TEE

STAINLESS STEEL TAPPING TEE

INSTALLED ON ASBESTOS CEMENT PIPE, CAST IRON PIPE AND DUCTILE IRON PIPE.

STEEL TAPPING TEE

INSTALLED ON DUCTILE IRON PIPE ONLY.

NOTES:

1. STAINLESS STEEL TAPPING TEES SHALL HAVE FULL CIRCLE SEAL. BOLTS AND NUTS SHALL BE STAINLESS STEEL.
2. STEEL TAPPING TEES SHALL BE EPOXY COATED. BOLTS AND NUTS SHALL BE COR-TEN, OR STAINLESS STEEL.
3. ALL TEES AND VALVES TO BE WATER TESTED BEFORE TAP.
4. TAPPING TEE MAY BE SIZE ON SIZE. TAP SHALL BE AT LEAST 2" SMALLER DIAMETER THAN THE EXISTING MAIN.

City of Bellevue

WATER UTILITY

TITLE

TAPPING TEES

JANUARY 2013

NO SCALE

NO. W-10

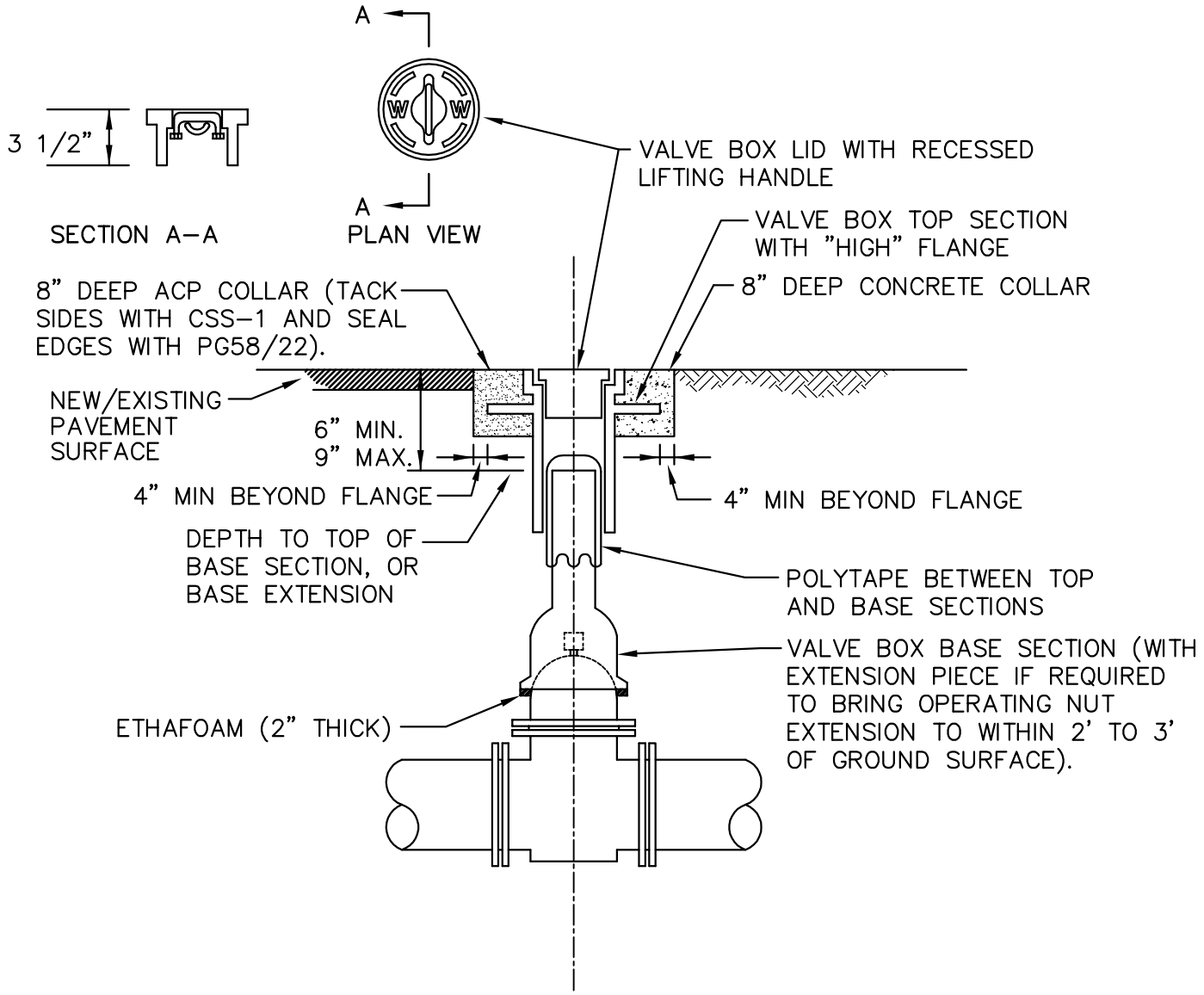

PAVED AREAS

UNPAVED AREAS

NOTES:

1. ALL PARTS SHALL BE CAST OR DUCTILE IRON AND COATED WITH ASPHALTIC VARNISH.
2. OLYMPIC FOUNDRY INC: #VB045 LID, TOP AND BASE SECTION.
3. RICH (VANRICH CASTING CORP.): TOP SECTION AND LID #045 WITH RICH STANDARD BASE.
4. 12" ADJUSTING SLEEVE #044A.

City of Bellevue

WATER UTILITY

TITLE

VALVE BOX INSTALLATION

JANUARY 2013

NO SCALE

NO. W–11

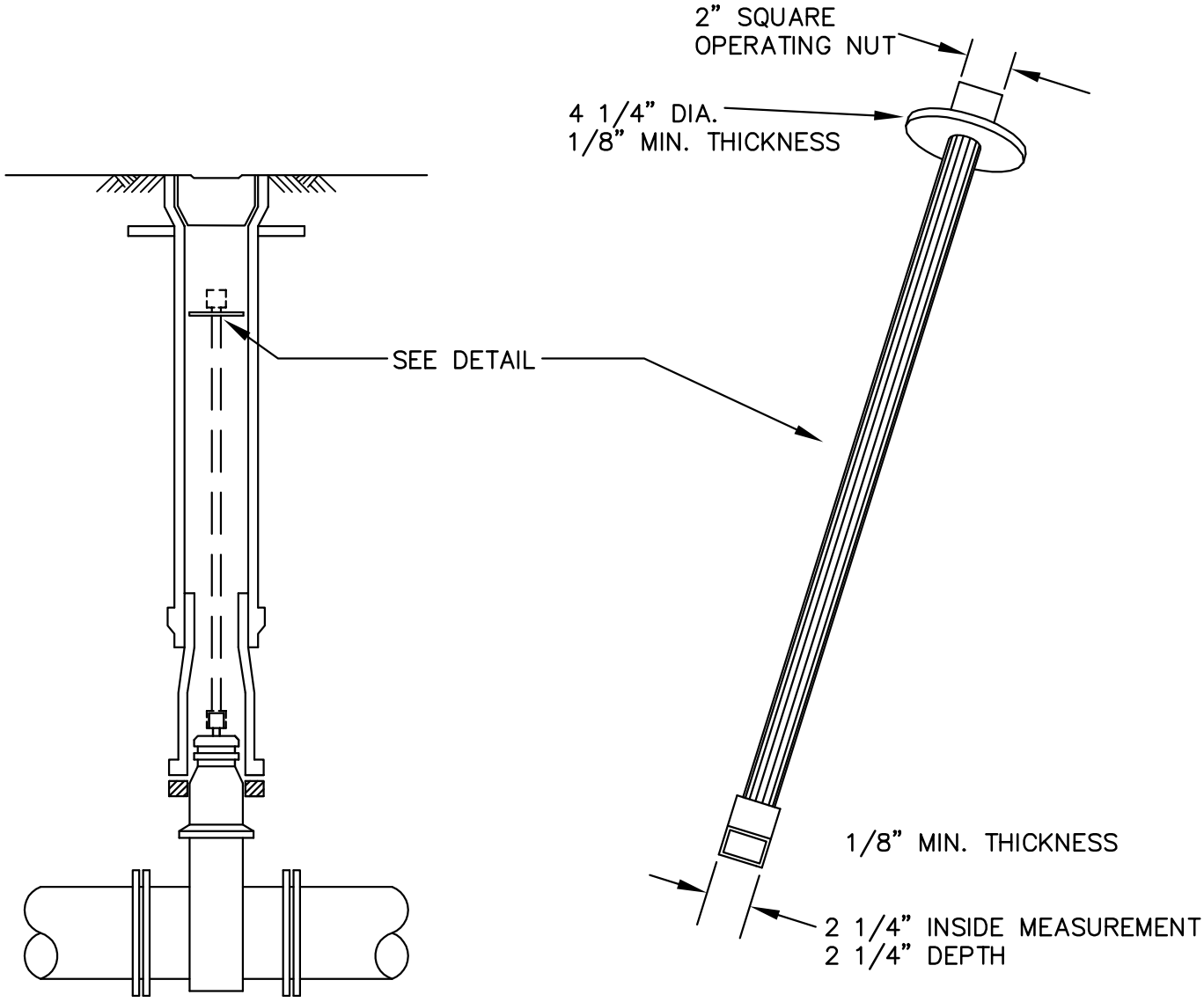

VALVE OPERATING NUT EXTENSION

EXTENSIONS ARE REQUIRED WHEN THE VALVE NUT IS MORE THAN THREE (3) FEET BELOW FINISHED GRADE. EXTENSIONS ARE TO BE A MINIMUM OF ONE (1) FOOT LONG. ONLY ONE EXTENSION TO BE USED PER VALVE.

NOTES:

1. ALL EXTENSIONS ARE TO BE MADE OF STEEL, SIZED AS NOTED, AND HOT DIPPED GALVANIZED.
2. INSTALL EXTENSIONS PERPENDICULAR TO THE WATER LINE VERTICAL ALIGNMENT.

City of Bellevue

WATER UTILITY

TITLE

VALVE OPERATING EXTENSION

JANUARY 2013

NO SCALE

NO. W-12

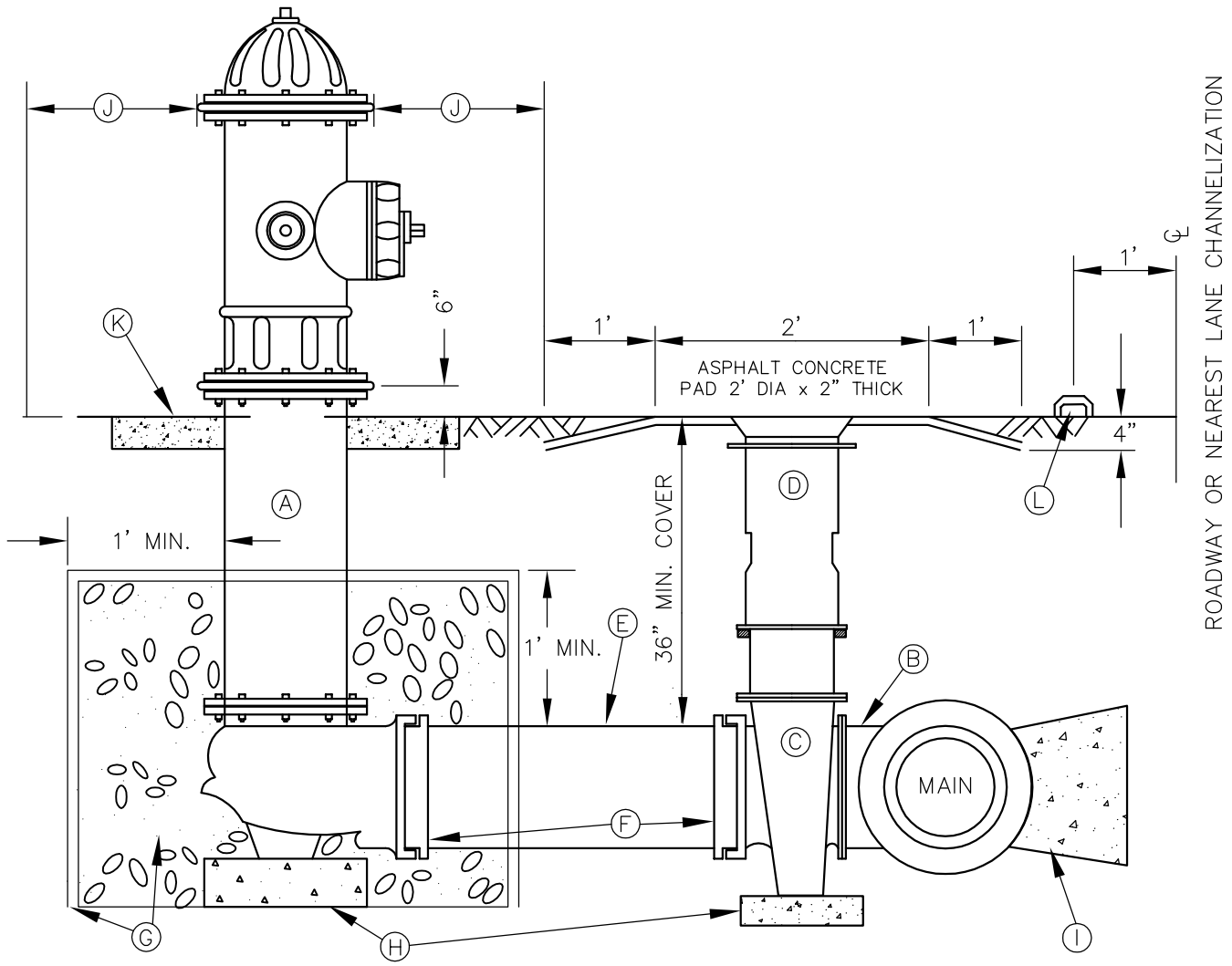

A. 1–5 1/4" M.V.O. HYDRANT WITH 2–2 1/2" N.S.T. AND 1–4" PUMPER PORTS, CITY OF SEATTLE STANDARD THREAD–M.J. INLET, WITH LUGS, BRASS TO BRASS SUB–SEAT. FIRE HYDRANT TO BE PAINTED WITH TWO COATS OF "SAFETY YELLOW," RUSTOLEUM, KRYLON, SHERWIN WILLIAMS, OR EQUAL. PUMPER PORT TO FACE STREET, OR AS DIRECTED BY THE FIRE DEPARTMENT.

B. 6" FLANGE OUTLET ON CAST OR DUCTILE IRON TEE.

C. 1–AUXILIARY GATE VALVE: 6" AWWA C509, RESILIENT SEAT, M.J.xFL. WITH LUGS.

D. 1–TWO–PIECE CAST IRON VALVE BOX EQUAL TO RICH SEATTLE TYPE #045 WITH RECESSED HANDLE LID.

E. 1–6" DUCTILE IRON CLASS 52 CEMENT–LINED PIPE, LENGTH TO FIT. WHERE MORE THAN ONE LENGTH OF PIPE IS REQUIRED, CONNECT PIPES WITH MECHANICAL JOINT SLEEVE, RESTRAIN PIPE AND SLEEVE WITH MEGALUG RESTRAINERS, OR RESTRAIN PIPES WITH UNI–FLANGE SERIES 1400 JOINT RESTRAINERS.

F. RESTRAIN MECHANICAL JOINTS WITH MEGALUG RESTRAINERS.

G. 1/2 YARD WASHED DRAIN ROCK (3" TO 3/8"), MIN. 1' ABOVE BOOT FLANGE PLACE 8 MIL POLYETHYLENE FILM AROUND TOP AND SIDES OF GRAVEL DO NOT BLOCK DRAIN HOLES.

H. 16"X8"X4" MIN. SIZE CONCRETE BLOCK UNDER HYDRANT AND VALVE.

I. CONC. BLOCKING PER STD DETAIL NO. W–1.

J. 3' MIN. RADIUS OF LEVEL GROUND AROUND OUTSIDE OF HYDRANT.

K. IN UNIMPROVED AREAS INSTALL 2' RADIUS BY 4" THICK CONCRETE PAD. PAD IS NOT REQUIRED IN AREAS WITH MOWED TURF, BEAUTY BARK, CRUSHED ROCK SURFACE, CONCRETE, OR ASPHALT.

L. INSTALL A BLUE, RAISED TYPE 2 PAVEMENT MARKER ON THE SAME SIDE OF ROAD AS THE HYDRANT, ONE FOOT OFF THE ROADWAY CENTERLINE, OR NEAREST LANE CHANNELIZATION.

City of Bellevue

WATER UTILITY

TITLE

FIRE HYDRANT ASSEMBLY

JANUARY 2013

NO SCALE

NO. W–13

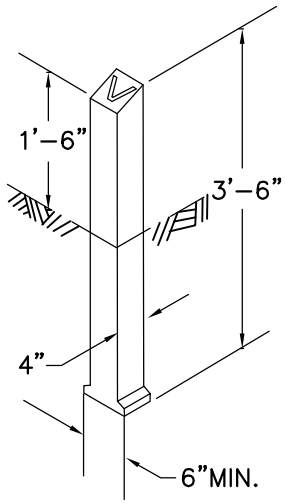

VALVE MARKER POST

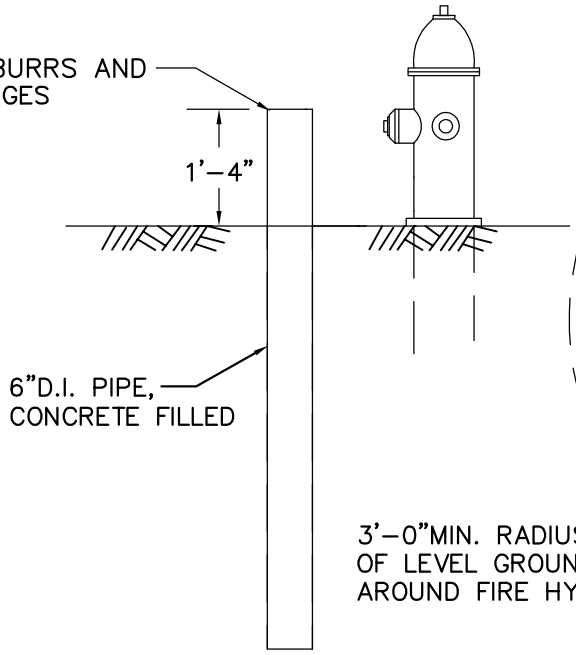

ELEVATION

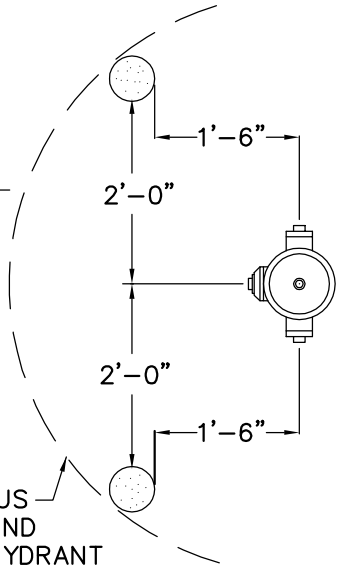

PLAN

FIRE HYDRANT GUARD POST

NOTES:

1. GUARD POST SHALL BE 6" CL.52 D.I. PIPE, 6' LONG, FILLED WITH CONCRETE. PAINT WITH TWO COATS OF "SAFETY YELLOW" RUSTOLEUM, KRYLON, SHERWIN WILLIAMS OR EQUAL.

2. VALVE MARKER POST SHALL BE EQUAL TO FOG TITE METER SEAL COMPANY. PAINT WITH TWO COATS OF RUST–OLEUM HIGH GLOSS WHITE PAINT. PAINT DISTANCE FROM THE VALVE MARKER TO THE VALVE ON THE POST WITH BLACK ENAMEL PAINT.

3. VALVE MARKER POST TO BE USED FOR ALL MAINLINE VALVES OUTSIDE PAVED AREAS.

City of Bellevue

WATER UTILITY

TITLE

FIRE HYDRANT GUARD POST
& VALVE MARKER POST

JANUARY 2013

NO SCALE

NO. W–14

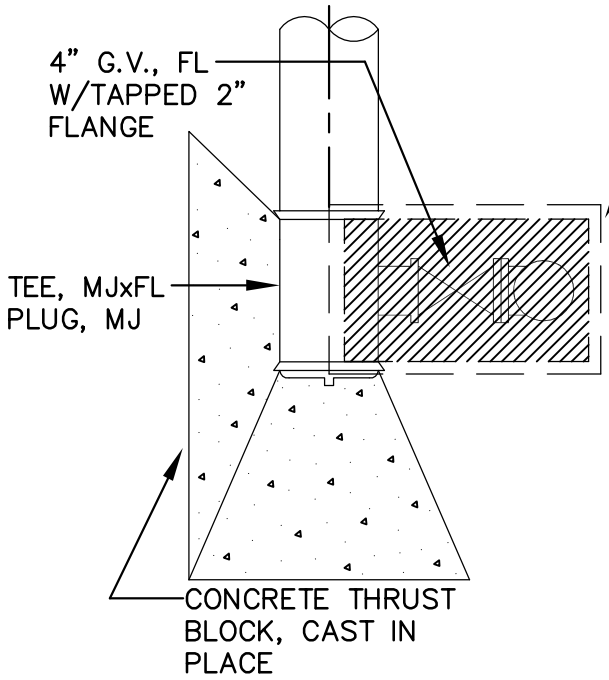

(PLAN)
TOP VIEW

METER BOX

IN PAVED AREAS

CUL-DE-SAC (DEAD-END):	OLYMPIC FOUNDRY SM-30
THRU-STREET SHOULDER:	OLYMPIC FOUNDRY SM-30
TRAVELED STREET LANE:	24" DIAMETER CAST IRON MANHOLE COVER FOR 24" OPENING FRAME TO READ "WATER", WITH RAISED NON-SKID PATTERN RATED FOR H-20 LOAD. FRAME SHALL BE 6" DEEP, SET WITH FLANGE-SIDE DOWN ON 24" DIAMETER CONCRETE DONUTS (TOTAL DEPTH OF DONUTS = 12").

OUTSIDE PAVED AREAS
(NOT SUBJECT TO TRAFFIC LOAD)

CARSON INDUSTRIES
1730-18 BCFXL WITH 1730 COVER.

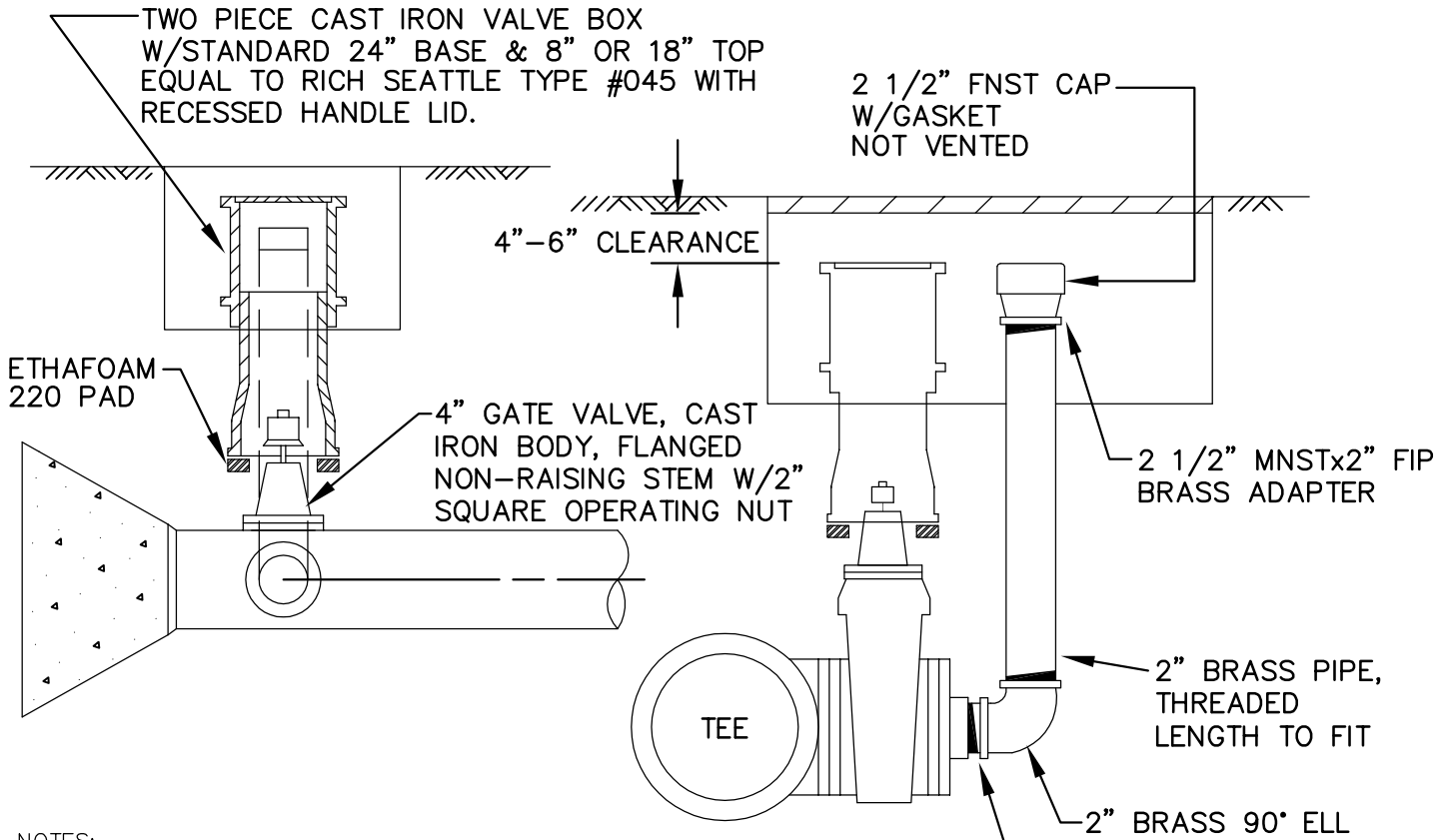

SIDE VIEW
(PROFILE)

NOTES:

1. ALL PIPE SHALL BE BRASS BEYOND GATE VALVE.
2. ALL ASSEMBLIES SHALL BE LOCATED IN STREET UNLESS OTHERWISE NOTED.
3. WHEN INSTALLED OUTSIDE PAVED AREAS, INSTALL VALVE MARKER POST PER STANDARD DETAIL NO. W-14 AND FIELD LOCATE ADJACENT TO METER BOX PAINTED WITH TWO COATS OF RUSTOLEUM HIGH GLOSS WHITE PAINT.

City of Bellevue

WATER UTILITY

TITLE

2" BLOW-OFF ASSEMBLY

JANUARY 2013

NO SCALE

NO. W-15

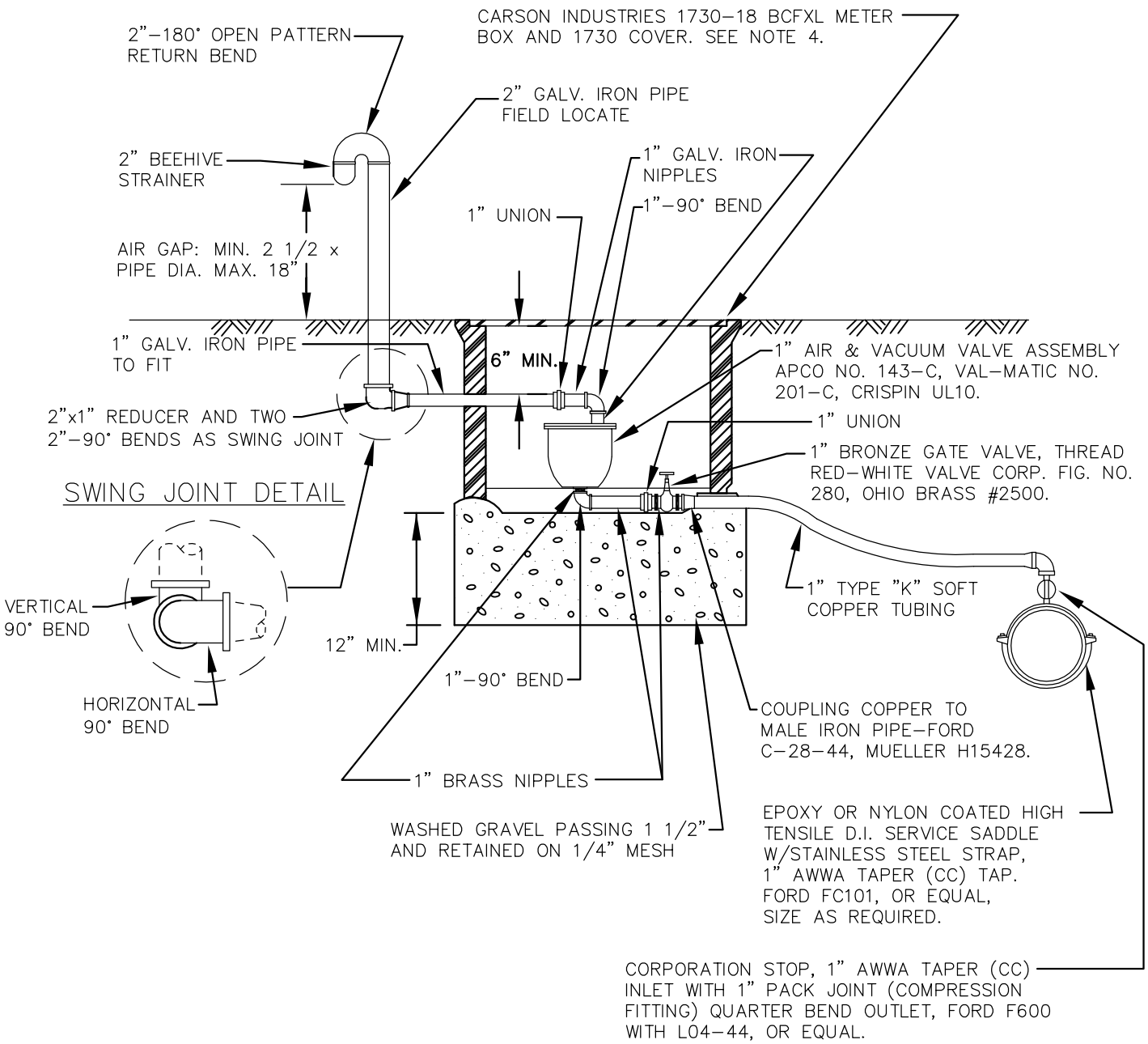

NOTES:

1. ALL FITTINGS TO BE BRASS OR COPPER FROM WATER MAIN TO 1" AIR & VACUUM ASSEMBLY.
2. 2" GALVANIZED PIPE ABOVE GRADE TO BE PAINTED WITH 2 COATS RUSTOLEUM HIGH GLOSS WHITE PAINT.
3. AIR & VACUUM RELEASE VALVE ASSEMBLY MUST BE INSTALLED AT HIGHEST POINT OF LINE. IF HIGH POINT FALLS IN A LOCATION WHERE ASSEMBLY CANNOT BE INSTALLED, PROVIDE ADDITIONAL DEPTH OF LINE TO CREATE HIGH POINT AT A LOCATION WHERE ASSEMBLY CAN BE INSTALLED.
4. LOCATE AIR & VACUUM METER BOX OUTSIDE OF TRAFFIC AREAS, BEHIND CURB. IN SIDEWALKS AND AREAS WITH VEHICULAR TRAFFIC, USE OLYMPIC FOUNDRY SM–30 CAST IRON BOX & COVER.

City of Bellevue

WATER UTILITY

TITLE

1" AIR & VACUUM RELEASE VALVE ASSEMBLY

JANUARY 2013

NO SCALE

NO. W–16

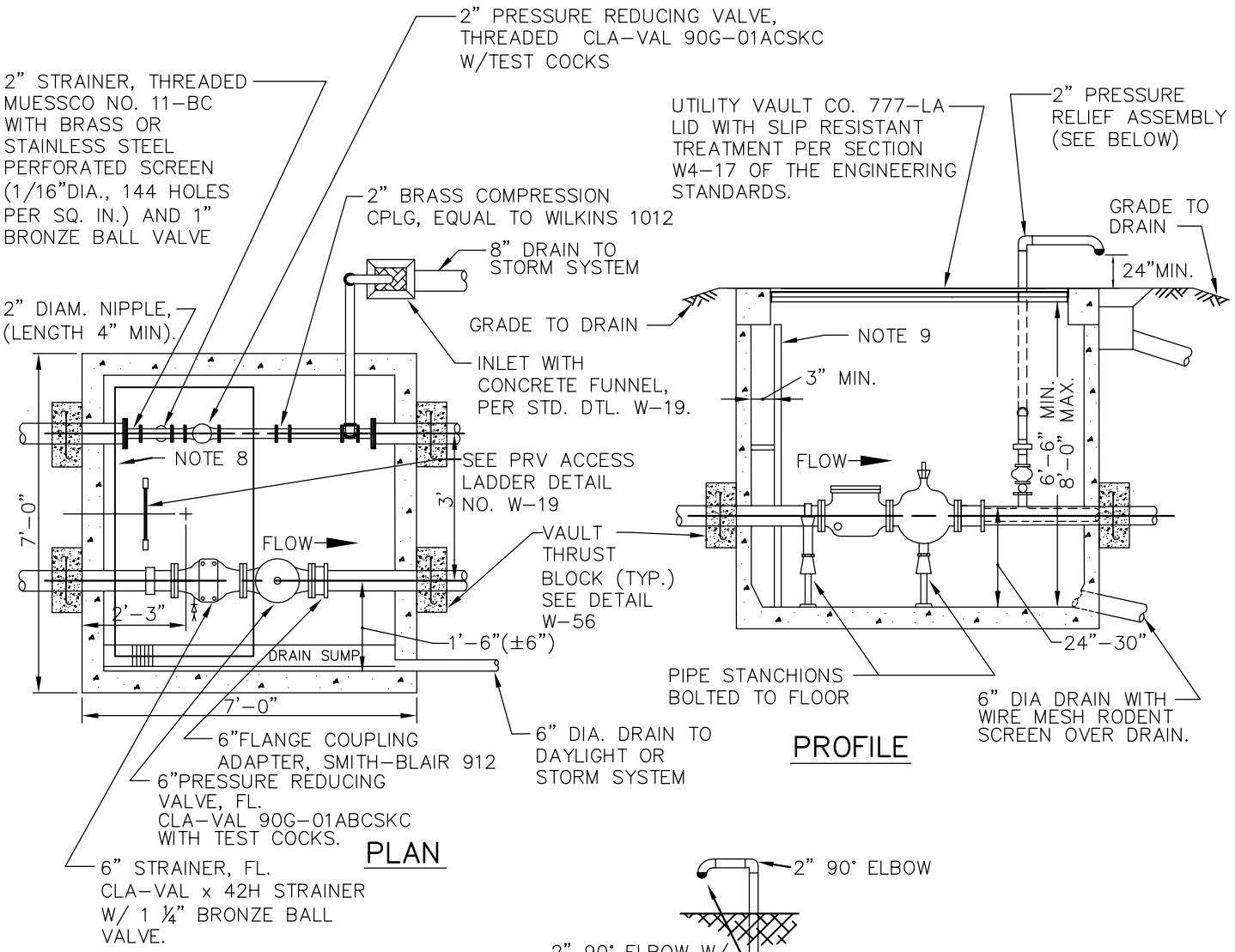

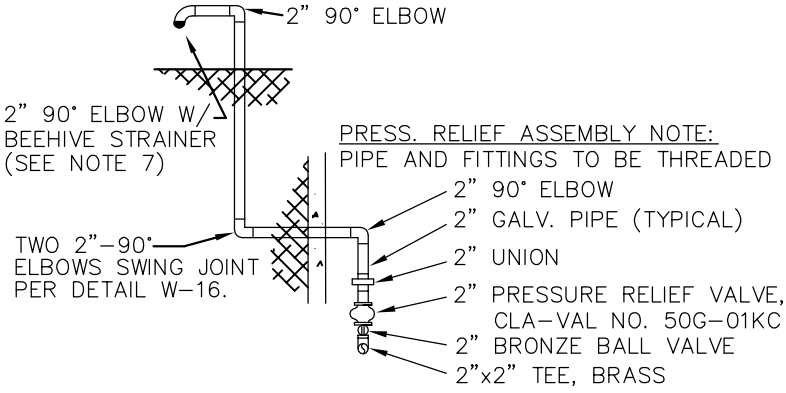

2" PRESSURE RELIEF ASSEMBLY

NOTES:

1. SIZING OF VALVES WILL BE MODIFIED FOR OTHER SIZES OF PIPE.
2. GALVANIZED LADDER TO BE SECURED TO VAULT PER STD. DTL. NO. W-19.
3. ALL P.R.V.s SHALL HAVE OPENING/CLOSING SPEED CONTROLS, EPOXY COATED BODY AND VALVE POSITION INDICATOR, CLA-VAL X101.
4. PILOT CONTROLS SHALL BE ON SIDE OF P.R.V. FACING INTERIOR OF VAULT TO PROVIDE EASY ACCESS.
5. ALL CLA-VAL PRVs AND PRESSURE RELIEF VALVES SHALL BE EQUIPPED W/STAINLESS STEEL TRIM (SEAT, STEM & COVER BEARING).
6. SEAL ALL PIPE PENETRATIONS THROUGH VAULT W/ LINK SEAL MODULAR SEALS.
7. PRESSURE RELIEF DISCHARGE DOWNSPOUT SHALL DIRECT WATER TOWARDS CENTER OF INLET GRATE.
8. HATCH AND LADDER PER DETAIL W-19.
9. PROVIDE LADDER-UP EXTENSION, BILCO MODEL LU-2, OR EQUAL.
10. MINIMUM 2' OF LEVEL, UNOBSTRUCTED AREA AROUND HATCHES.
11. PROVIDE CAST OR FIELD CORE DRILLED HOLES THROUGH VAULT WALLS FOR PIPE PENETRATIONS.

JANUARY 2013 NO SCALE

City of Bellevue

WATER UTILITY

TITLE

STANDARD PRESSURE REDUCING STATION

NO. W-17

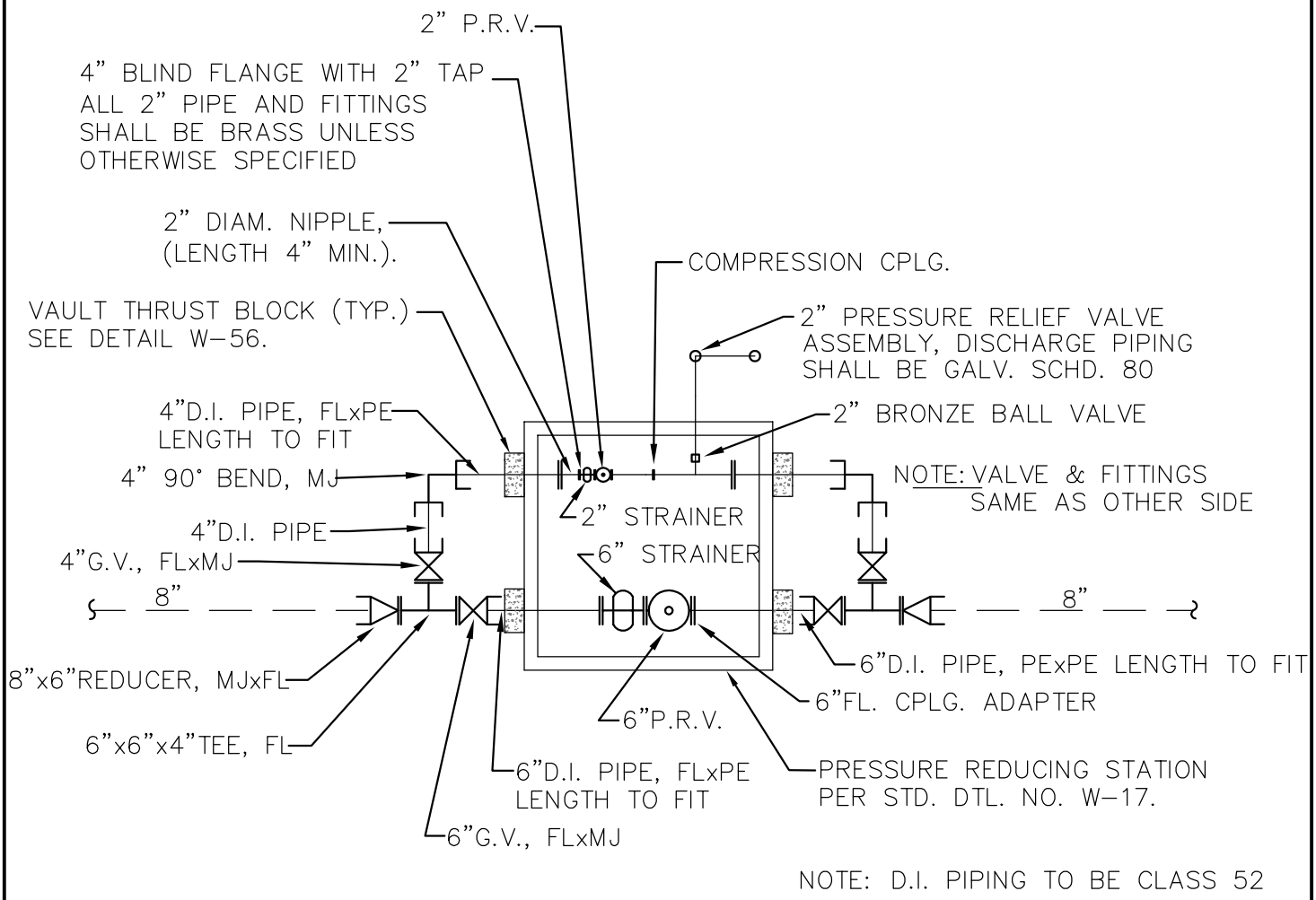

NOTES:

1. SIZING OF VALVES WILL BE MODIFIED FOR OTHER SIZES OF PIPE.
2. GALVANIZED LADDER TO BE SECURED TO VAULT PER STD. DTL. NO. W-19.
3. ALL P.R.V.s SHALL HAVE OPENING/CLOSING SPEED CONTROLS, EPOXY COATED BODY AND VALVE POSITION INDICATOR, CLA-VAL X101.
4. PILOT CONTROLS SHALL BE ON SIDE OF P.R.V. FACING INTERIOR OF VAULT TO PROVIDE EASY ACCESS.
5. SEAL ALL PIPE PENETRATIONS THROUGH VAULT W/ LINK SEAL MODULAR SEALS.

City of Bellevue

WATER UTILITY

TITLE

TYPICAL P.R.V. SCHEMATIC

JANUARY 2013

NO SCALE

NO. W-18

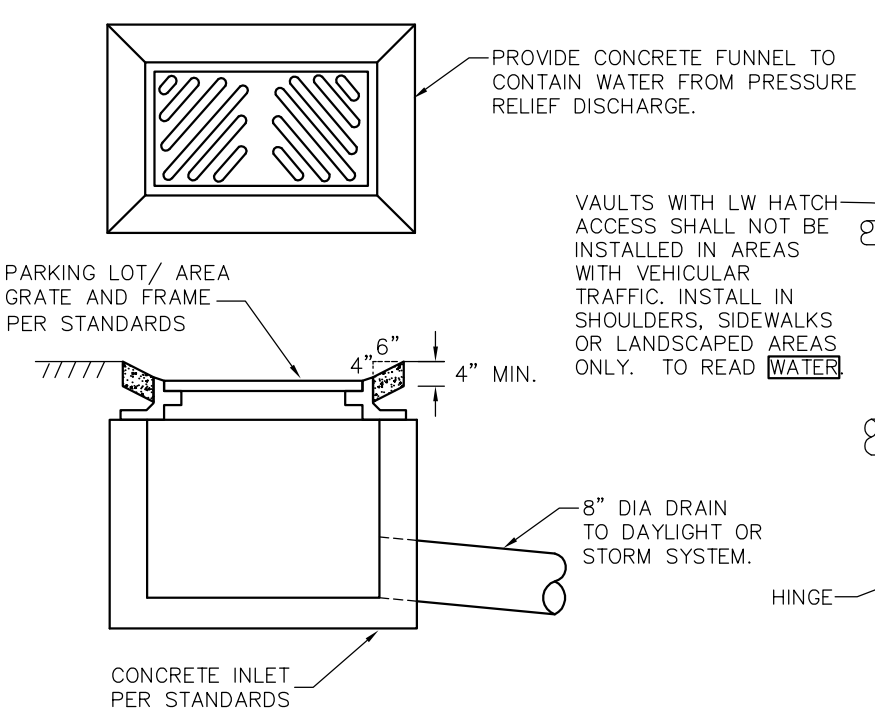

PRESSURE RELIEF DRAIN

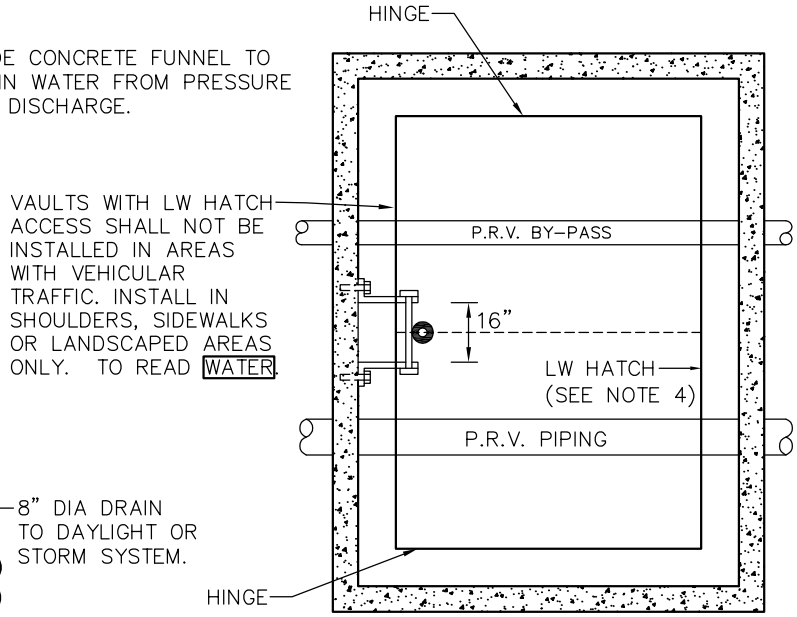

PLAN VIEW

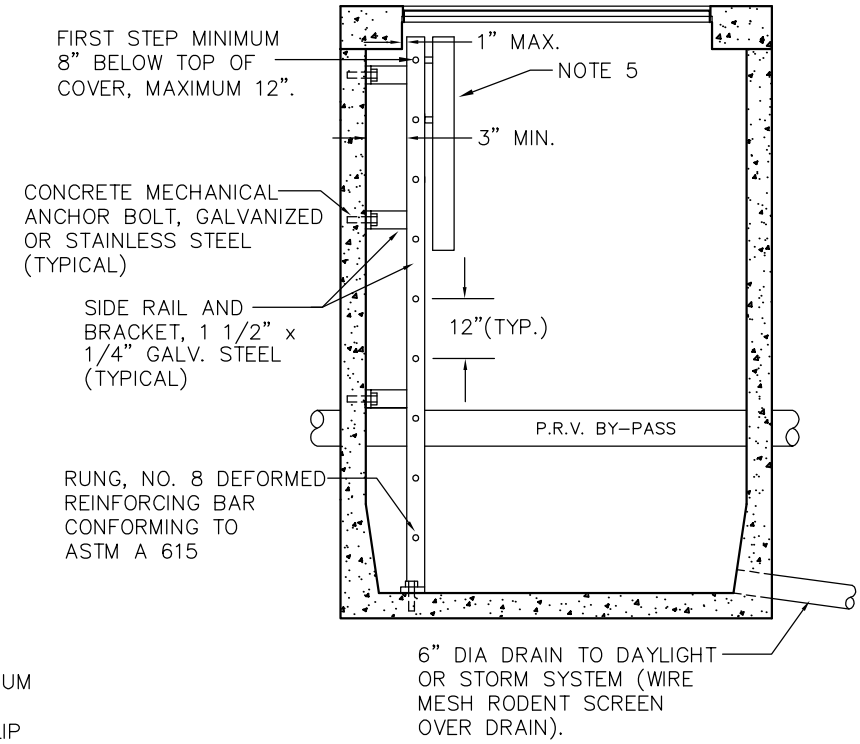

ELEVATION VIEW

NOTES:

1. LADDER TO BE SECURED TO VAULT WALL AT 3 LOCATIONS, ONE AT THE TOP, MIDDLE AND BOTTOM.
2. ALL LADDER PARTS TO BE GALVANIZED CONFORMING TO ASTM A 123
3. LOCATE PRESSURE RELIEF DRAIN OUTSIDE PEDESTRIAN AND TRAFFIC AREAS.
4. ACCESS HATCH SHALL BE LOCKING ALUMINUM LW PRODUCTS HHD 48"x60" DOUBLE DOOR MODEL RATED FOR H-30 LOADING WITH SLIP RESISTANT TREATMENT PER SECTION W4-17 OF THE ENGINEERING STANDARDS. HATCHES SHALL INCLUDE RECESSED PADLOCK HASP SIZED TO ACCEPT CITY OF BELLEVUE WATER DIVISION PADLOCKS (CONTACT LW PRODUCTS).
5. LADDER-UP ATTACHMENT REQUIRED ON ALL VAULT LADDERS. BILCO MODEL LU-2, OR EQUAL.
6. MANHOLE LID IS OPTIONAL ONLY WHEN STATION COVER IS LOCATED IN TRAFFIC.
7. DRAIN HATCH GUTTER DRAIN TO EXISTING CB OR DAYLIGHT.

City of Bellevue

WATER UTILITY

TITLE

PRESSURE REDUCING STATION ACCESS LADDER AND PRESSURE RELIEF DRAIN

NO. W-19

JANUARY 2013

NO SCALE

P.R.V. SHALL HAVE AN INTEGRAL BYPASS

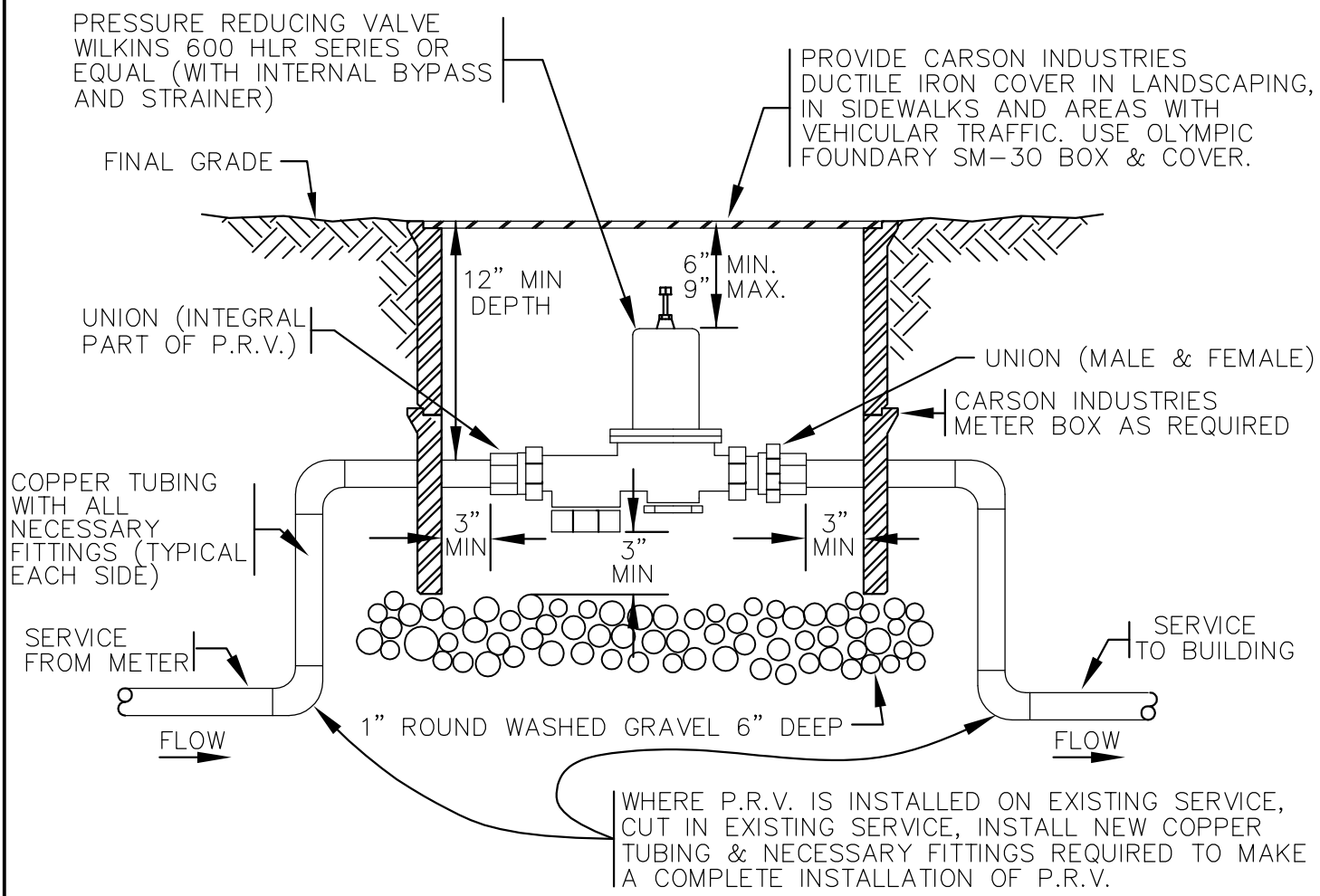

P.R.V. SIZE	CARSON INDUSTRIES METER BOX MODEL NO.
2"	1730-18 BCFXL
1 1/2"	1730-18 BCFXL
1"	1730-18 BCFXL

City of Bellevue

WATER UTILITY

TITLE

INDIVIDUAL PRESSURE REDUCING VALVE ASSEMBLY (RESIDENTIAL)

JANUARY 2013

NO SCALE

NO. W-20

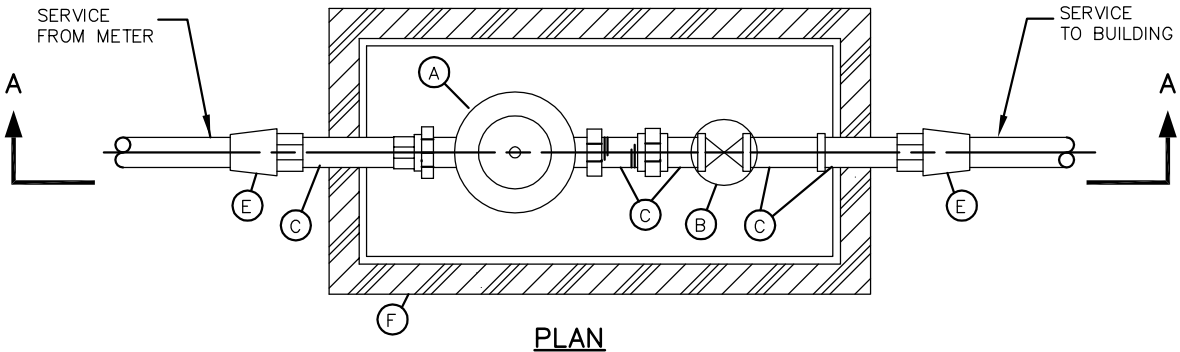

PLAN

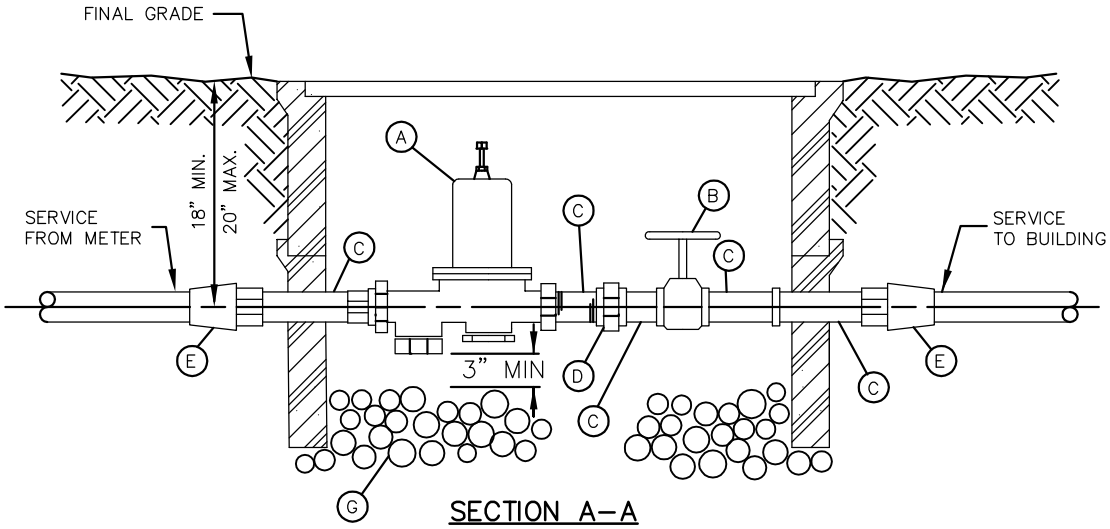

SECTION A–A

MATERIALS LIST

(A) PRESSURE REGULATOR – WILKINS 600 HLR SERIES OR EQUAL (WITH INTERNAL BYPASS AND STRAINER)

(B) BRONZE BALL VALVE, THREADED.

(C) NIPPLE x 2 1/2" LONG, MALE.

(D) UNION, FEMALE.

(E) ADAPTER, FEMALE x COMPRESSION FITTING FOR COPPER.

(F) METER BOX FOR 1" INSTALLATION:
CARSON INDUSTRIES 1730–18 BCFXL WITH 1730 COVER
FOR 1 1/2" & 2" INSTALLATION:
CARSON INDUSTRIES 1730–18 BCFXL WITH 1730 COVER
FOR ALL SIZE INSTALLATIONS:
PROVIDE CARSON INDUSTRIES DUCTILE IRON COVER IN LANDSCAPING.
FOR SIDEWALKS AND AREAS WITH VEHICULAR TRAFFIC, PROVIDE OLYMPIC FOUNDRY SM–30 CAST IRON BOX & COVER.

(G) 1" ROUND WASHED GRAVEL, 8" MIN. DEPTH.

NOTES:

1. PRESSURE REGULATOR SIZE AS SPECIFIED OR SHOWN ON PLAN.
2. SIZES FOR ITEMS (B) THROUGH (E) SHALL CORRESPOND TO THE SPECIFIED SIZE OF THE PRESSURE REGULATOR.
3. ALL FITTINGS AND NIPPLES ARE BRASS WITH IRON PIPE THREADS.

City of Bellevue

WATER UTILITY

TITLE

INDIVIDUAL PRESSURE REDUCING VALVE ASSEMBLY (MULTI–FAMILY OR COMMERCIAL)

NO. W–21

JANUARY 2013

NO SCALE

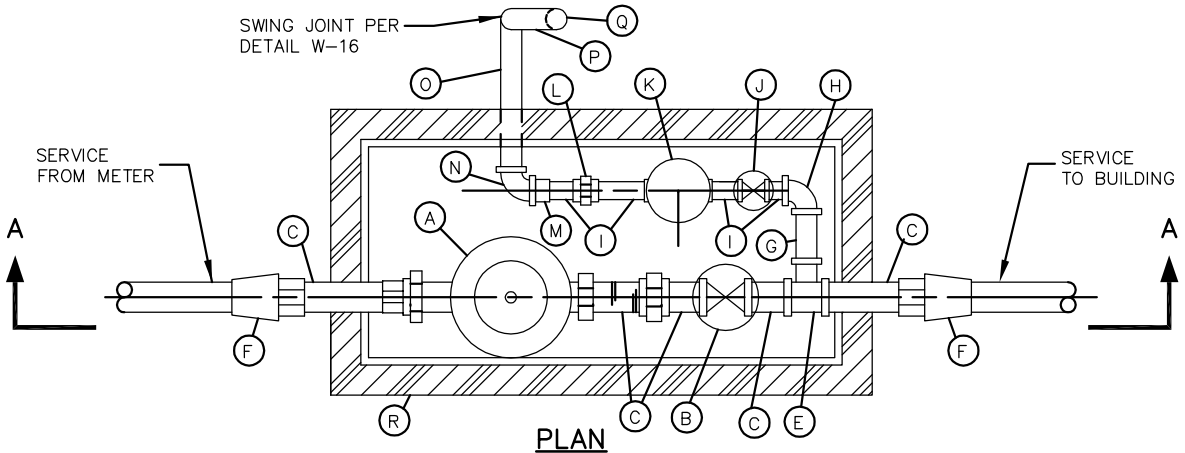

PLAN

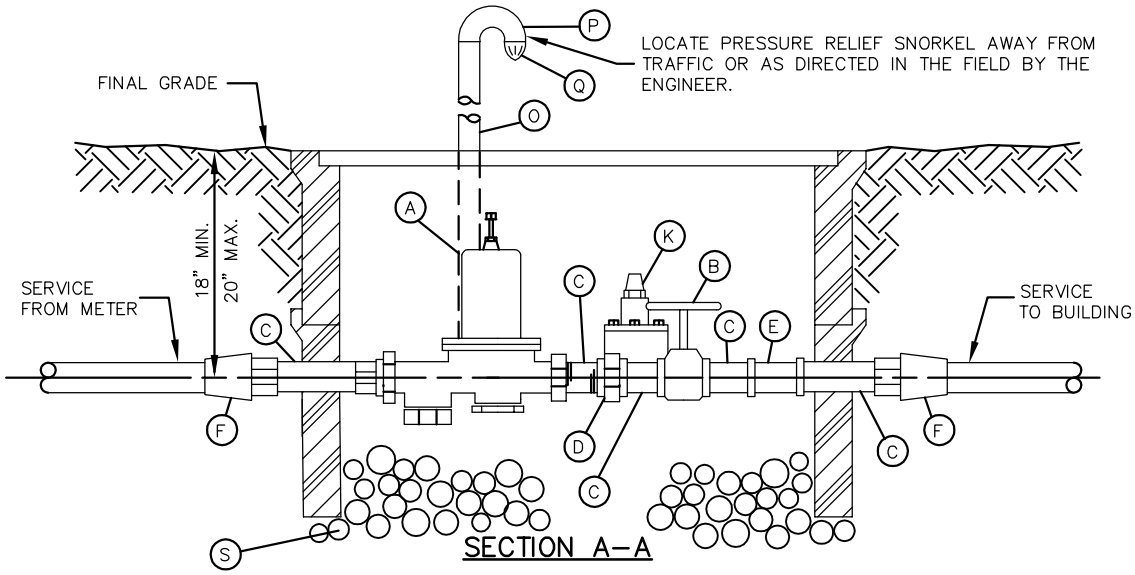

SECTION A–A

MATERIALS LIST

- (A) PRESSURE REGULATOR – WILKINS 600 SERIES OR EQUAL (WITH INTEGRAL BYPASS AND STRAINER)
- (B) BRONZE BALL VALVE, THREADED (FEMALE x FEMALE).
- (C) NIPPLE x 2 1/2" LONG MALE.
- (D) UNION, FEMALE.
- (E) REDUCING TEE x 3/4" DIAMETER BRANCH, FEMALE.
- (F) ADAPTER, FEMALE x COMPRESSION FITTING FOR COPPER.
- (G) 3/4" NIPPLE x LENGTH TO FIT, MALE.
- (H) 3/4" 90° ELBOW, FEMALE.
- (I) 3/4" x 2 1/2" NIPPLE, MALE.
- (J) 3/4" BRONZE BALL VALVE, THREADED (FEMALE x FEMALE).
- (K) 3/4" PRESSURE RELIEF VALVE – CLAVAL 55 F
- (L) 3/4" UNION, FEMALE.
- (M) 3/4" x 2" BUSHING.
- (N) 2" 90° ELBOW, FEMALE.
- (O) 2" G.I. PIPE x LENGTH TO FIT AS DIRECTED, 10' MAX. INTEGRATED LENGTH.
- (P) 2" OPEN PATTERN RETURN BEND, G.I.
- (Q) 2" BEEHIVE STRAINER.
- (R) 17"x 30" METER BOX CARSON INDUSTRIES, (2) 1730–18 BCFXL (STACKED). PROVIDE CARSON INDUSTRIES DUCTILE IRON COVER IN LANDSCAPING. FOR SIDEWALKS AND AREAS WITH VEHICULAR TRAFFIC, OLYMPIC FOUNDRY SM–30 CAST IRON BOX & COVER.
- (S) 1" ROUND WASHED GRAVEL, 8" MIN. DEPTH.

NOTES:

1. PRESSURE REGULATOR SIZE AS SPECIFIED OR SHOWN ON PLAN.
2. SIZES FOR ITEMS (B) THROUGH (F) SHALL CORRESPOND TO THE SPECIFIED SIZE OF THE PRESSURE REGULATOR.
3. FITTINGS AND NIPPLES ARE BRASS WITH IRON PIPE THREADS, UNLESS OTHERWISE SHOWN.
4. FOR 2" INSTALLATION, MINIMUM INSIDE LENGTH OF BOX SHALL BE 32".

JANUARY 2013 NO SCALE

City of Bellevue

WATER UTILITY

TITLE INDIVIDUAL PRESSURE REDUCING VALVE ASSEMBLY WITH PRESSURE RELIEF (MULTI–FAMILY OR COMMERCIAL) NO. W–22

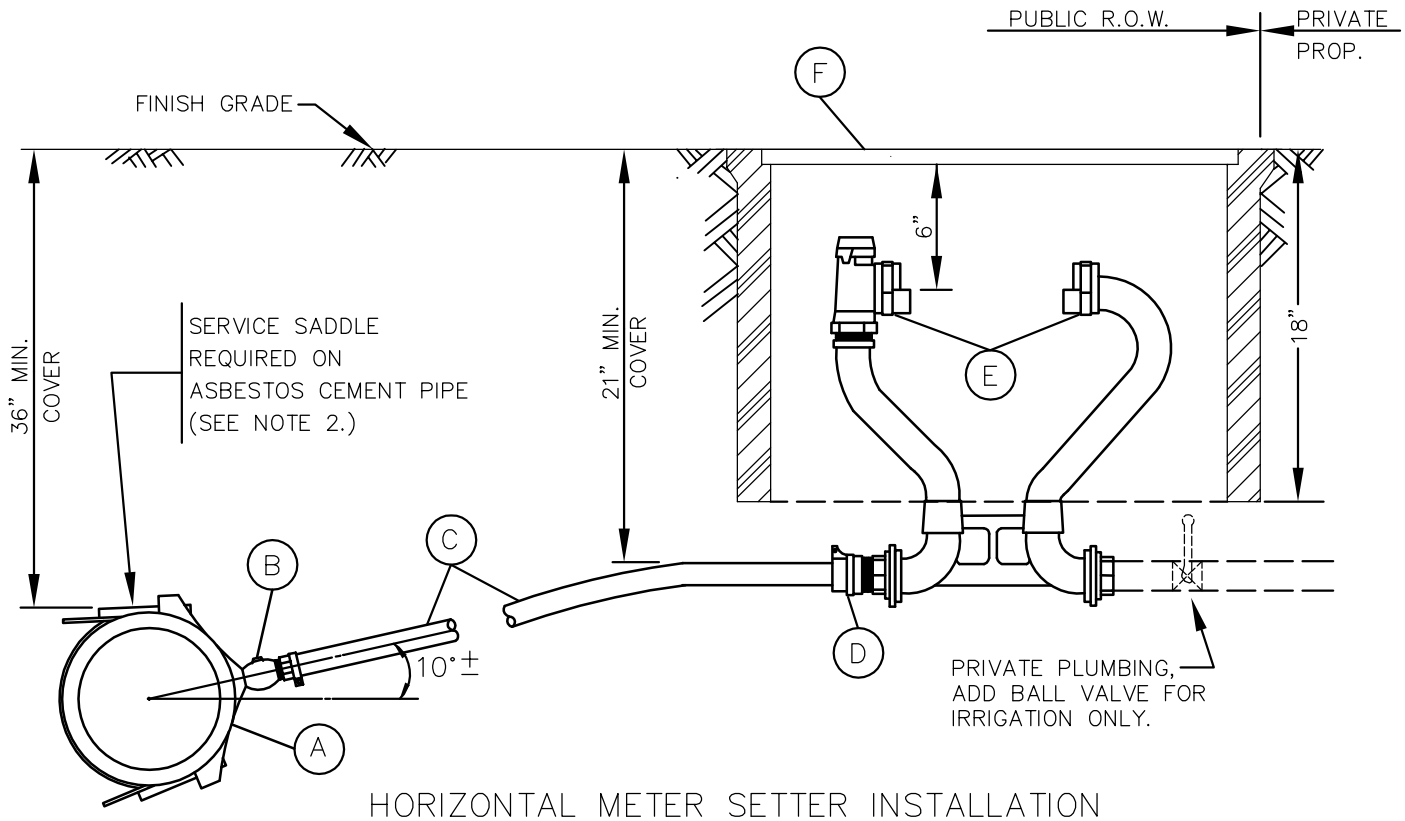

HORIZONTAL METER SETTER INSTALLATION

(A) EPOXY OR NYLON COATED HIGH TENSILE D.I. SERVICE SADDLE W/ STAINLESS STEEL STRAP AND EPOXY COATED BOSS, 1" AWWA TAPER (CC) TAP, FORD FC101 OR EQUAL, SIZE AS REQUIRED.

(B) BALL CORPORATION STOP, 1" AWWA TAPER (CC) INLET BY 1" PACK JOINT (COMPRESSION FITTING) FOR COPPER OUTLET, FORD FB1000-4, MUELLER NO. B-25008, OR EQUAL.

(C) 1" COPPER TUBING, TYPE K.

(D) COUPLING, 1" MALE IRON PIPE THREAD BY 1" PACK JOINT (COMPRESSION FITTING) FOR COPPER, FORD C84-44, MUELLER NO. H-15428, OR EQUAL.

(E) 1" METER SETTER WITH DOUBLE (DUAL) PURPOSE COUPLINGS AND ANGLE METER VALVE (ANGLE STOP) WITH PADLOCK WINGS, FORD V74-12W, MUELLER 1" NO. H-1404 X 12 WITH MULTIPURPOSE CONNECTION NO. H-14222, A.Y. MCDONALD 20-412WXDD44, OR EQUAL.

(F) METER BOX, EQUAL TO:
CARSON INDUSTRIES 1527-18 BCFXL METER BOX WITH 1527 COVER WITH MAX VIEW READER DOOR IN NONTRAVELED AREAS. OLYMPIC FOUNDRY SM30 IN SIDEWALK AND IN AREAS WITH VEHICULAR TRAFFIC.

NOTES:

1. SERVICE LINE SHALL BE PERPENDICULAR TO THE WATERMAIN, UNLESS OTHERWISE APPROVED BY THE ENGINEER.
2. SERVICE SADDLE INSTALLED AT CONTRACTOR'S OPTION ON CLASS 52 OR THICKER D.I. PIPE, THE CORP. STOP MAY BE TAPPED DIRECTLY INTO THE PIPE.
3. APPROVED BACKFLOW PREVENTION MUST BE INSTALLED WITH IRRIGATION SERVICE PER D.O.H. REQUIREMENTS. IRRIGATION SYSTEM SHALL NOT BE PUT INTO SERVICE UNTIL THE BACKFLOW PREVENTION DEVICE IS APPROVED BY A CITY OF BELLEVUE WATER QUALITY TECHNICIAN.
4. METER WILL BE SUPPLIED AND INSTALLED BY THE CITY OF BELLEVUE.

City of Bellevue

WATER UTILITY

TITLE

1" x 1"
SINGLE WATER SERVICE OR
DOMESTIC IRRIGATION SERVICE
(HORIZONTAL METER SETTER)

NO. W-23

JANUARY 2013

NO SCALE

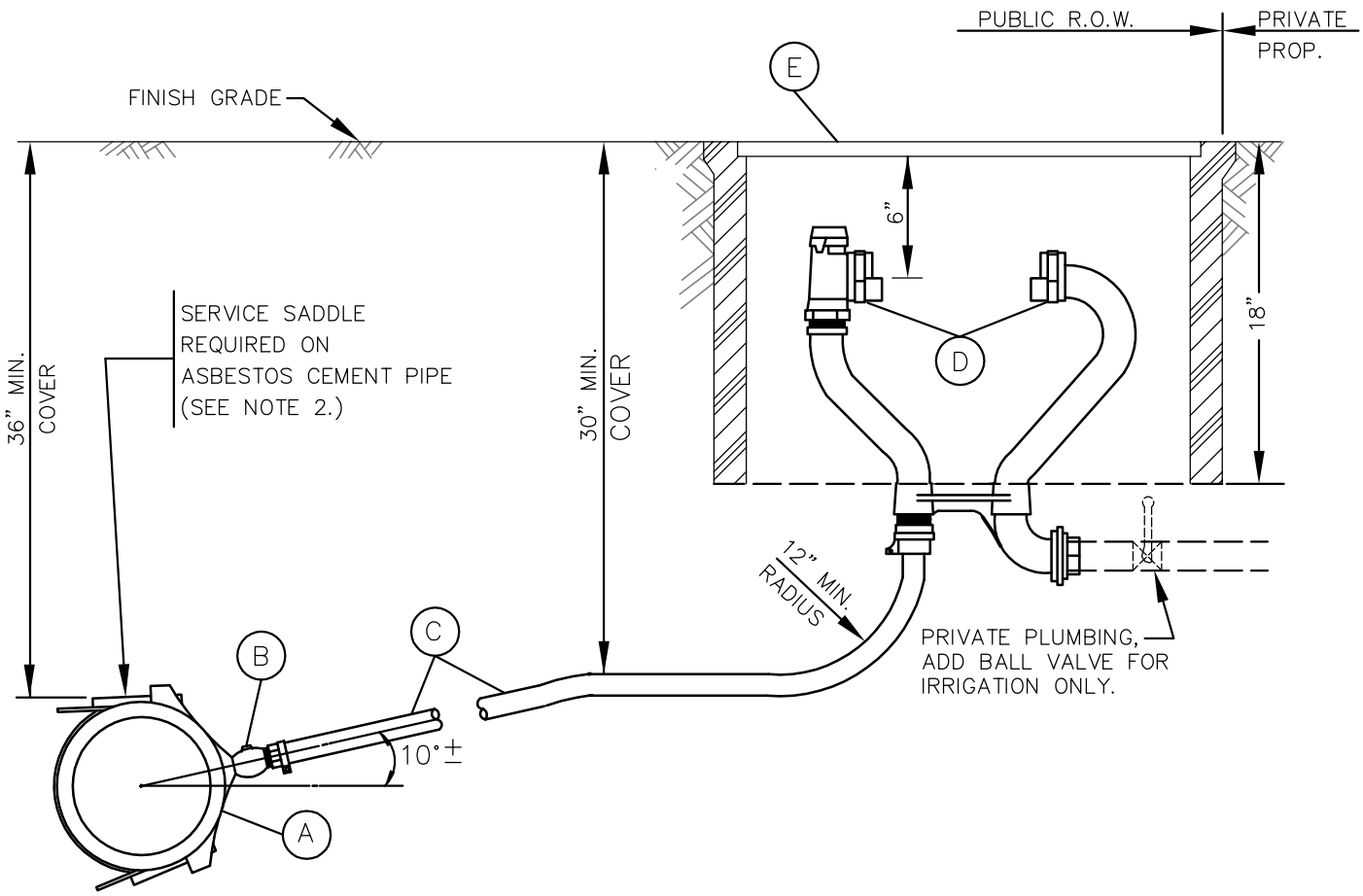

VERTICAL METER SETTER INSTALLATION

(A) EPOXY OR NYLON COATED HIGH TENSILE D.I. SERVICE SADDLE W/ STAINLESS STEEL STRAP AND EPOXY COATED BOSS, 1" AWWA TAPER (CC) TAP, FORD FC101 OR EQUAL, SIZE AS REQUIRED.

(B) BALL CORPORATION STOP, 1" AWWA TAPER (CC) INLET BY 1" PACK JOINT (COMPRESSION FITTING) FOR COPPER OUTLET, FORD FB1000-4, MUELLER NO. P-15028, OR EQUAL.

(C) 1" COPPER TUBING, TYPE K.

(D) 1" METER SETTER WITH ANGLE STOP, 1" PACK JOINT (COMPRESSION FITTING) FOR COPPER INLET BY DOUBLE (DUAL) PURPOSE COUPLING OUTLET, ANGLE METER VALVE (ANGLE STOP) WITH PADLOCK WINGS, VERTICAL INLET BY HORIZONTAL OUTLET, FORD V74-84 x 12W, A.Y. MCDONALD 39-412WX2D44 (WITH INLET COUPLING M.I.P.T. BY PACK JOINT, 4753-22), OR EQUAL.

(E) METER BOX, EQUAL TO:
CARSON INDUSTRIES 1527-18 BCFXL METER BOX WITH 1527 COVER WITH MAX VIEW READER DOOR IN NON-TRAVELED AREAS. OLYMPIC FOUNDRY SM30 IN SIDEWALK AND IN AREAS WITH VEHICULAR TRAFFIC.

NOTES:

1. SERVICE LINE SHALL BE PERPENDICULAR TO THE WATERMAIN, UNLESS OTHERWISE APPROVED BY THE ENGINEER.
2. SERVICE SADDLE INSTALLED AT CONTRACTOR'S OPTION ON CLASS 52 OR THICKER D.I. PIPE, THE CORP. STOP MAY BE TAPPED DIRECTLY INTO THE PIPE.
3. APPROVED BACKFLOW PREVENTION MUST BE INSTALLED WITH IRRIGATION SERVICE PER D.O.H. REQUIREMENTS. IRRIGATION SYSTEM SHALL NOT BE PUT INTO SERVICE UNTIL THE BACKFLOW PREVENTION DEVICE IS APPROVED BY A CITY OF BELLEVUE WATER QUALITY TECHNICIAN.
4. METER WILL BE SUPPLIED AND INSTALLED BY THE CITY OF BELLEVUE.

JANUARY 2013 NO SCALE

City of Bellevue

WATER UTILITY

TITLE

1" x 1"
SINGLE WATER SERVICE OR
DOMESTIC IRRIGATION SERVICE
(VERTICAL METER SETTER) NO. W-24

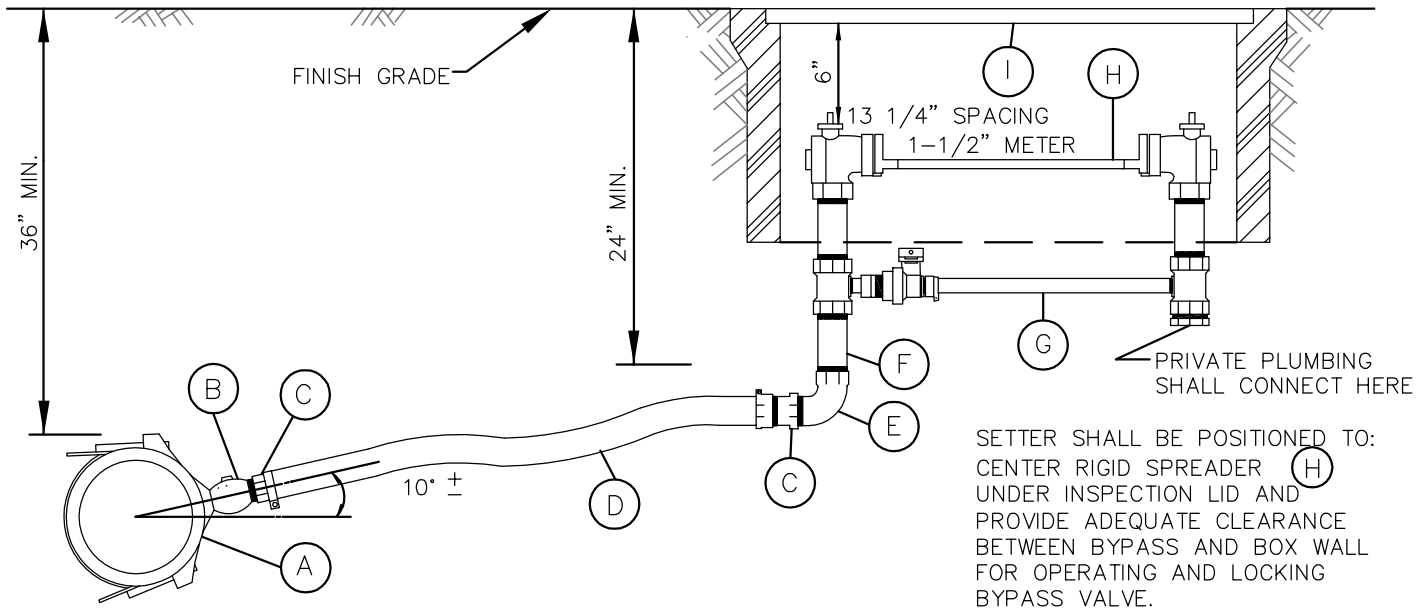

(A) EPOXY OR NYLON COATED HIGH TENSILE D.I. SERVICE SADDLE W/ DOUBLE STAINLESS STEEL STRAP AND EPOXY COATED BOSS, 1 1/2" AWWA TAPER (CC) TAP, FORD FC202 OR FCD202, OR EQUAL, SIZE AS REQUIRED.

(B) BALL CORPORATION STOP, 1 1/2" AWWA TAPER (CC) INLET BY 1 1/2" MALE IRON PIPE THREAD OUTLET WITH BALL VALVE (OR EQUAL LOW-FRICTION VALVE), FORD BALLCORP FB400-6, MUELLER ORISEAL NO. H-9968, OR EQUAL.

(C) COUPLING, 1 1/2" FEMALE IRON PIPE THREAD BY 1 1/2" PACK JOINT (COMPRESSION FITTING) FOR COPPER, FORD C14-66, MUELLER NO. H-15451, OR EQUAL.

(D) 1 1/2" COPPER TUBING, TYPE K.

(E) 1 1/2" STREET ELL, BRASS, FEMALE IRON PIPE THREAD BY FEMALE IRON PIPE THREAD.

(F) 1 1/2" NIPPLE, BRASS, M.I.P.T. X M.I.P.T., LENGTH AS REQUIRED TO MEET PROPER GRADE.

(G) 1 1/2" BRASS AND COPPER METER SETTER WITH LOW BYPASS:
- FLANGED BALL METER VALVE ON INLET AND OUTLET
- BALL VALVE ON BYPASS
- PADLOCK WINGS ON ALL VALVES
- VERTICAL INLET AND OUTLET, F.I.P.T.
- BUSHING INCLUDED ON OUTLET

FORD VBB76-12B-11-66 WITH LOW BYPASS OR A.Y. MCDONALD 20B612WWFF665 VERTICAL METER SETTER WITH VALVE ROTATED 90 DEG., OR EQUAL.

(H) RIGID METER SPREADER, SUPPLIED BY CITY OF BELLEVUE, TO BE INSTALLED IN METER SETTER BY CONTRACTOR.

(I) METER BOX, EQUAL TO:
CARSON INDUSTRIES 1730-18 BCFXL METER BOX WITH 1730 COVER WITH MAX VIEW READER DOOR IN NON-TRAVELED AREAS. OLYMPIC FOUNDRY SM30 IN SIDEWALK AND IN AREAS WITH VEHICULAR TRAFFIC.

NOTES:

1. SERVICE LINE SHALL BE PERPENDICULAR TO THE WATERMAIN, UNLESS OTHERWISE APPROVED BY THE ENGINEER.
2. BYPASS WILL BE LOCKED OFF BY CONSTRUCTION INSPECTOR WHEN METER SPREADER IS INSTALLED.
3. METER WILL BE SUPPLIED AND INSTALLED BY THE CITY OF BELLEVUE.

City of Bellevue

WATER UTILITY

TITLE

1 1/2" DOMESTIC WATER AND/OR FIRE SERVICE

JANUARY 2013

NO SCALE

NO. W-25

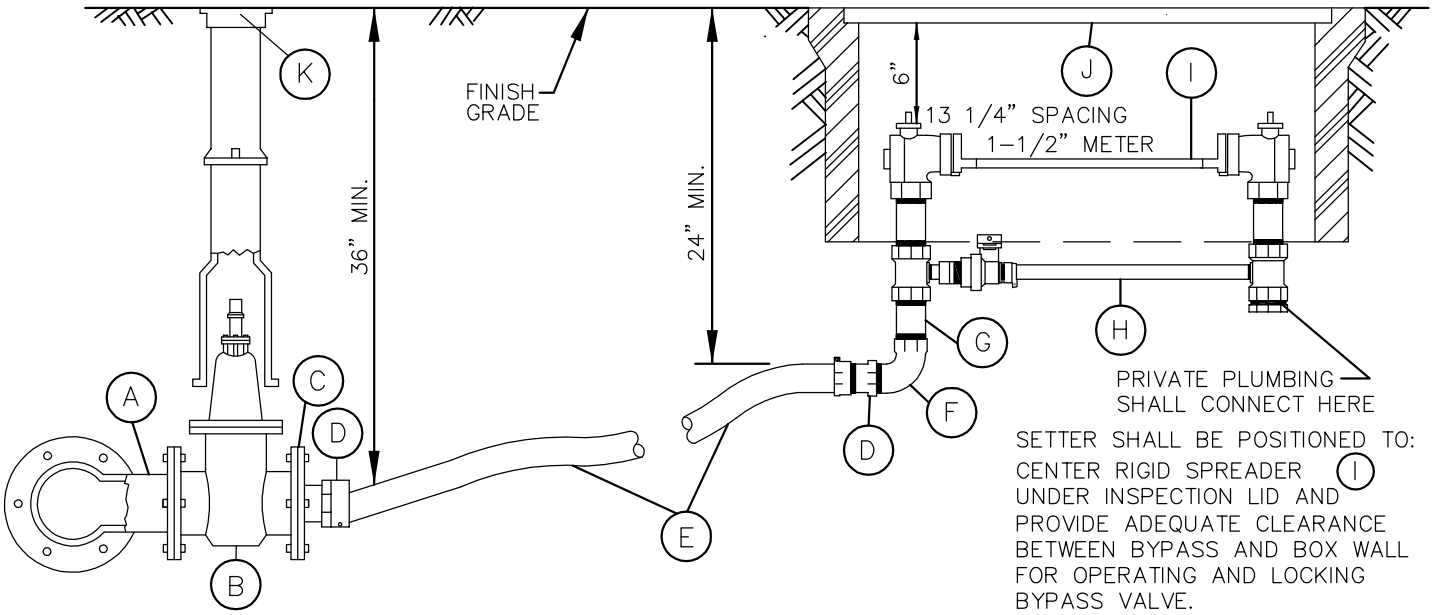

(A) DUCTILE IRON TEE WITH 4" BRANCH, FL WITH (3) GATE VALVES (ON NEW MAINS), TAPPING TEE WITH 4" BRANCH, FL WITH (1) GATE VALVE (ON EXISTING MAINS).

(B) 4" GATE VALVE, FL.

(C) 4" REDUCING COMPANION FLANGE WITH 1 1/2" TAP.

(D) COUPLING, 1 1/2" MALE IRON PIPE THREAD BY 1 1/2" PACK JOINT (COMPRESSION FITTING) FOR COPPER, FORD C14-66, MUELLER NO. H-15451, OR EQUAL.

(E) 1 1/2" COPPER TUBING, TYPE K.

(F) 1 1/2" STREET ELL, BRASS, FEMALE IRON PIPE THREAD BY FEMALE IRON PIPE THREAD.

(G) 1 1/2" NIPPLE, BRASS, M.I.P.T. x M.I.P.T., LENGTH AS REQUIRED TO MEET PROPER GRADE.

(H) 1 1/2" BRASS AND COPPER METER SETTER WITH LOW BYPASS:
- FLANGED BALL METER VALVE ON INLET AND OUTLET
- BALL VALVE ON BYPASS
- PADLOCK WINGS ON ALL VALVES
- VERTICAL INLET AND OUTLET, F.I.P.T.
- BUSHING INCLUDED ON OUTLET

FORD VBB76-12B-11-66 WITH LOW BYPASS OR A.Y. MCDONALD 20B612WWFF665 VERTICAL METER SETTER WITH VALVE ROTATED 90 DEG., OR EQUAL.

(I) RIGID METER SPREADER, SUPPLIED BY CITY OF BELLEVUE, TO BE INSTALLED IN METER SETTER BY CONTRACTOR.

(J) METER BOX, EQUAL TO:
CARSON INDUSTRIES 1730-18 BCFXL METER BOX WITH 1730 COVER WITH MAX VIEW READER DOOR IN NON-TRAVELED AREAS. OLYMPIC FOUNDRY SM30 IN SIDEWALK AND IN AREAS WITH VEHICULAR TRAFFIC.

(K) TWO PIECE CAST IRON VALVE BOX TO FIT, EQUAL TO RICH SEATTLE TYPE #045 - WITH RECESSED HANDLE LID. SEE DETAIL W-11.

NOTES:

1. SERVICE LINE SHALL BE PERPENDICULAR TO THE WATERMAIN, UNLESS OTHERWISE APPROVED BY THE ENGINEER.
2. BYPASS WILL BE LOCKED OFF BY CONSTRUCTION INSPECTOR WHEN METER SPREADER IS INSTALLED.
3. METER WILL BE SUPPLIED AND INSTALLED BY THE CITY OF BELLEVUE.

City of Bellevue

WATER UTILITY

TITLE

1 1/2" DOMESTIC WATER SERVICE (COMMERCIAL AND MULTI-FAMILY)

JANUARY 2013

NO SCALE

NO. W-26

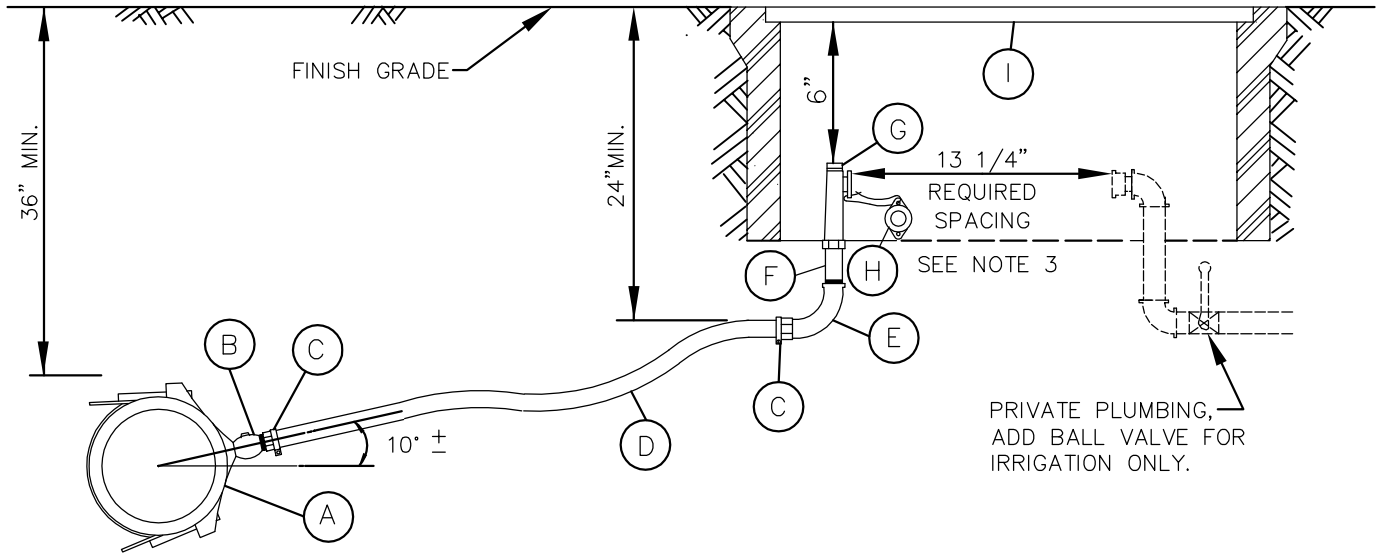

(A) EPOXY OR NYLON COATED HIGH TENSILE D.I. SERVICE SADDLE W/ DOUBLE STAINLESS STEEL STRAP AND EPOXY COATED BOSS, 1 1/2" AWWA TAPER (CC) TAP, FORD FC202 OR FCD202, OR EQUAL, SIZE AS REQUIRED.

(B) BALL CORPORATION STOP, 1–1/2" AWWA TAPER (CC) INLET BY 1–1/2" MALE IRON PIPE THREAD OUTLET WITH BALL VALVE (OR EQUAL LOW–FRICTION VALVE), FORD BALLCORP FB400–6, MUELLER ORISEAL NO. H–9968, OR EQUAL.

(C) COUPLING, 1–1/2" FEMALE IRON PIPE THREAD BY 1–1/2" PACK JOINT (COMPRESSION FITTING) FOR COPPER, FORD C14–66, MUELLER NO. H–15451, OR EQUAL.

(D) 1–1/2" COPPER TUBING, TYPE K.

(E) 1–1/2" STREET ELL, BRASS, FEMALE IRON PIPE THREAD BY FEMALE IRON PIPE THREAD.

(F) 1–1/2" NIPPLE, BRASS, M.I.P.T. x M.I.P.T., LENGTH AS REQUIRED TO MEET PROPER GRADE.

(G) 1–1/2" ANGLE METER VALVE WITH PADLOCK WINGS, FEMALE IRON PIPE BY FLANGED END FOR METER, FORD FV13–666W, MUELLER NO. H–14286, OR EQUAL.

(H) 1–1/2" COMPANION FLANGE, FORD NO. 6F FLANGE, OR EQUAL. TO BE WIRED OR SECURED TO ANGLE VALVE.

(I) METER BOX, EQUAL TO:
CARSON INDUSTRIES 1730–18 BCFXL METER BOX WITH 1730 COVER WITH MAX VIEW READER DOOR IN NON–TRAVELED AREAS. OLYMPIC FOUNDRY SM30 IN SIDEWALK AND IN AREAS WITH VEHICULAR TRAFFIC.

NOTES:

1. SERVICE LINE SHALL BE PERPENDICULAR TO THE WATERMAIN, UNLESS OTHERWISE APPROVED BY THE ENGINEER.
2. APPROVED BACKFLOW PREVENTION DEVICE MUST BE INSTALLED PER D.O.H. REQUIREMENTS. IRRIGATION SYSTEM SHALL NOT BE PUT INTO SERVICE UNTIL THE BACKFLOW PREVENTION DEVICE IS APPROVED BY THE CITY OF BELLEVUE WATER QUALITY TECHNICIAN.
3. IF SERVICE IS PLUMBED ON CUSTOMER'S SIDE PRIOR TO METER SET, 13–1/4" SPACING MUST BE ALLOWED FOR METER.
4. METER WILL BE SUPPLIED AND INSTALLED BY THE CITY OF BELLEVUE.

City of Bellevue

WATER UTILITY

TITLE

1 1/2" IRRIGATION WATER SERVICE

JANUARY 2013

NO SCALE

NO. W–27

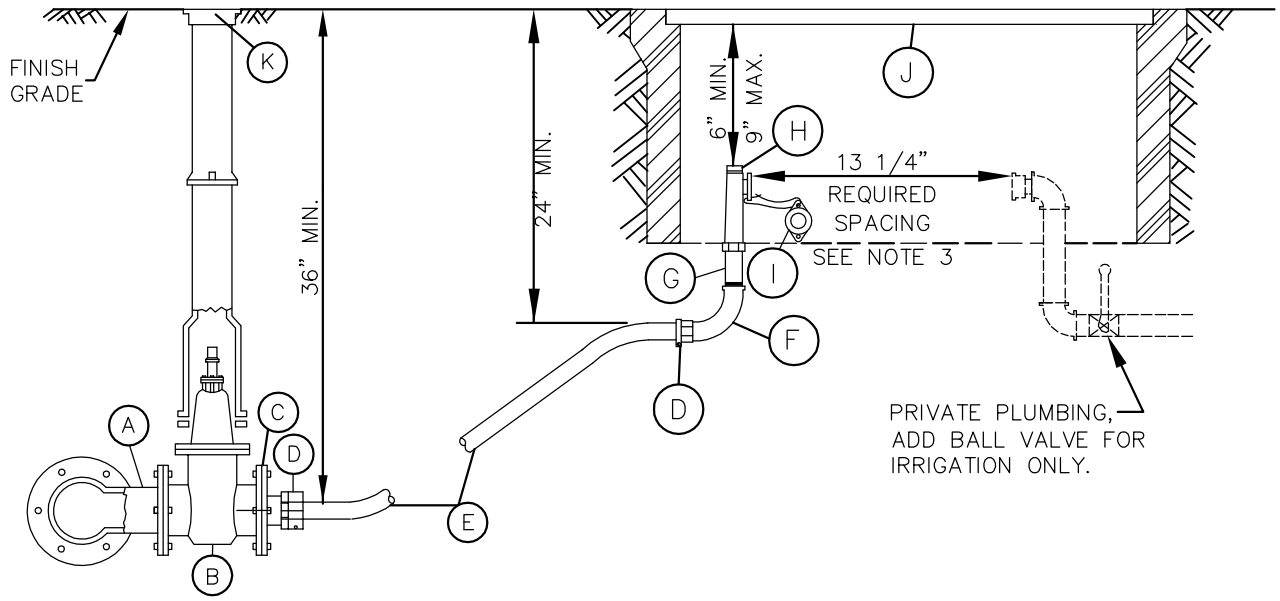

(A) DUCTILE IRON TEE WITH 4" BRANCH, FL WITH (3) GATE VALVES (ON NEW MAINS), TAPPING TEE WITH 4" BRANCH, FL WITH (1) GATE VALVE (ON EXISTING MAINS).

(B) 4" GATE VALVE, FL.

(C) 4" REDUCING COMPANION FLANGE WITH 1 1/2" TAP.

(D) COUPLING, 1 1/2" MALE IRON PIPE THREAD BY 1 1/2" PACK JOINT (COMPRESSION FITTING) FOR COPPER, FORD C14-66, MUELLER NO. H-15451, OR EQUAL.

(E) 1 1/2" COPPER TUBING, TYPE K.

(F) 1 1/2" STREET ELL, BRASS, FEMALE IRON PIPE THREAD BY FEMALE IRON PIPE THREAD.

(G) 1 1/2" NIPPLE, BRASS, M.I.P.T. x M.I.P.T., LENGTH AS REQUIRED TO MEET PROPER GRADE.

(H) 1 1/2" ANGLE METER VALVE WITH PADLOCK WINGS, FEMALE IRON PIPE BY FLANGED END FOR METER, FORD FV13-666W, MUELLER NO. H-14286, OR EQUAL.

(I) 1 1/2" COMPANION FLANGE, FORD NO. 6F FLANGE, OR EQUAL. TO BE WIRED OR SECURED TO ANGLE VALVE.

(J) METER BOX, EQUAL TO:
CARSON INDUSTRIES 1730-18 BCFXL METER BOX WITH 1730 COVER WITH MAX VIEW READER DOOR IN NON-TRAVELED AREAS. OLYMPIC FOUNDRY SM30 IN SIDEWALK AND IN AREAS WITH VEHICULAR TRAFFIC.

(K) TWO PIECE CAST IRON VALVE BOX TO FIT, EQUAL TO RICH SEATTLE TYPE #045 - WITH RECESSED HANDLE LID. SEE DETAIL W-11.

NOTES:

1. SERVICE LINE SHALL BE PERPENDICULAR TO THE WATERMAIN, UNLESS OTHERWISE APPROVED BY THE ENGINEER.
2. APPROVED BACKFLOW PREVENTION DEVICE MUST BE INSTALLED PER D.O.H. REQUIREMENTS. IRRIGATION SYSTEM SHALL NOT BE PUT INTO SERVICE UNTIL THE BACKFLOW PREVENTION DEVICE IS APPROVED BY THE CITY OF BELLEVUE WATER QUALITY TECHNICIAN.
3. IF SERVICE IS PLUMBED ON CUSTOMER'S SIDE PRIOR TO METER SET, 13-1/4" SPACING MUST BE ALLOWED FOR METER.
4. METER WILL BE SUPPLIED AND INSTALLED BY THE CITY OF BELLEVUE.

City of Bellevue

WATER UTILITY

TITLE

1 1/2" IRRIGATION WATER SERVICE (COMMERCIAL AND MULTI-FAMILY)

JANUARY 2013

NO SCALE

NO. W-28

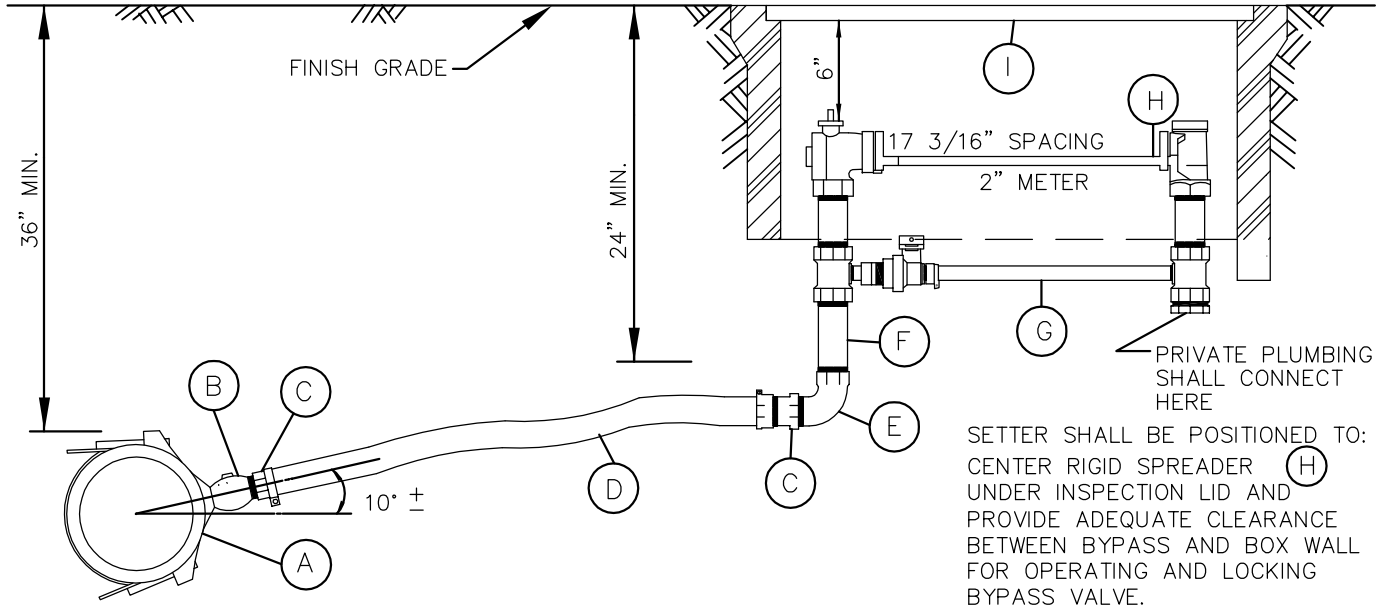

(A) EPOXY OR NYLON COATED HIGH TENSILE D.I. SERVICE SADDLE W/ DOUBLE STAINLESS STEEL STRAP AND EPOXY COATED BOSS, 2" AWWA TAPER (CC) TAP, FORD FC202 OR FCD202, OR EQUAL, SIZE AS REQUIRED.

(B) BALL CORPORATION STOP, 2" AWWA TAPER (CC) INLET BY 2" MALE IRON PIPE THREAD OUTLET WITH BALL VALVE (OR EQUAL LOW-FRICTION VALVE), FORD BALLCORP FB400-7. MUELLER ORISEAL NO. H-9968, OR EQUAL.

(C) COUPLING, 2" FEMALE IRON PIPE THREAD BY 2" PACK JOINT (COMPRESSION FITTING) FOR COPPER, FORD C14-77, MUELLER NO. H-15451, OR EQUAL.

(D) 2" COPPER TUBING, TYPE K.

(E) 2" STREET ELL, BRASS, FEMALE IRON PIPE THREAD BY FEMALE IRON PIPE THREAD.

(F) 2" NIPPLE, BRASS, M.I.P.T. x M.I.P.T., 6" LONG OR AS REQUIRED TO MEET PROPER GRADE.

(G) 2" BRASS AND COPPER METER SETTER WITH HIGH BYPASS:
- FLANGED BALL METER VALVE ON INLET AND OUTLET
- BALL VALVE ON BYPASS
- PADLOCK WINGS ON ALL VALVES
- VERTICAL INLET AND OUTLET, F.I.P.T.
- BUSHING INCLUDED ON OUTLET

FORD VBB77-12B-11-77 WITH LOW BYPASS OR A.Y. MCDONALD 20B712WWFF775 VERTICAL METER SETTER WITH VALVE ROTATED 90 DEG., OR EQUAL.

(H) RIGID METER SPREADER, SUPPLIED BY CITY OF BELLEVUE, TO BE INSTALLED IN METER SETTER BY CONTRACTOR.

(I) METER BOX, EQUAL TO:
CARSON INDUSTRIES 1730-18 BCFXL METER BOX WITH 1730 COVER WITH MAX VIEW READER DOOR IN NON-TRAVELED AREAS. OLYMPIC FOUNDRY SM30 IN SIDEWALK AND IN AREAS WITH VEHICULAR TRAFFIC.

NOTES:

1. SERVICE LINE SHALL BE PERPENDICULAR TO THE WATERMAIN, UNLESS OTHERWISE APPROVED BY THE ENGINEER.
2. BYPASS WILL BE LOCKED OFF BY CONSTRUCTION INSPECTOR WHEN METER SPREADER IS INSTALLED.
3. METER WILL BE SUPPLIED AND INSTALLED BY THE CITY OF BELLEVUE.

City of Bellevue

WATER UTILITY

TITLE

2" DOMESTIC WATER AND/OR FIRE SERVICE

JANUARY 2013

NO SCALE

NO. W-29

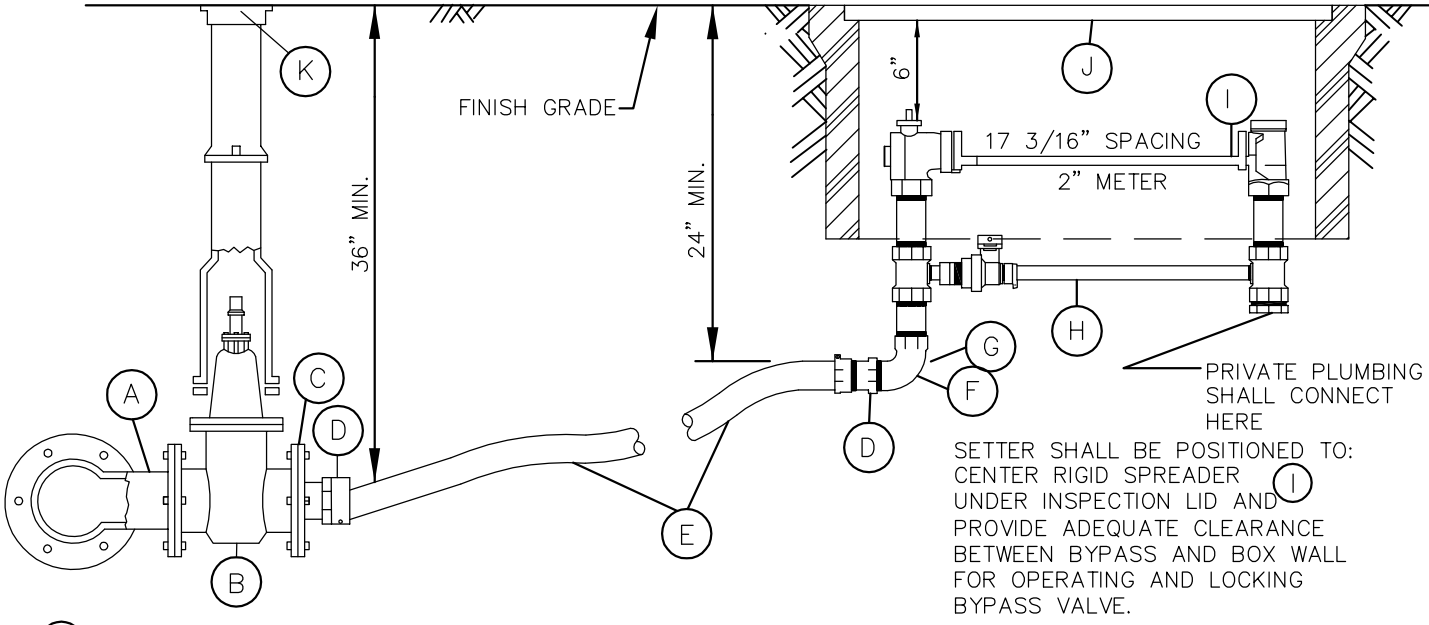

(A) DUCTILE IRON TEE WITH 4" BRANCH, FL WITH (3) GATE VALVES (ON NEW MAINS), TAPPING TEE WITH 4" BRANCH, FL WITH (1) GATE VALVE (ON EXISTING MAINS).

(B) 4" GATE VALVE, FL.

(C) 4" REDUCING COMPANION FLANGE WITH 2" TAP.

(D) COUPLING, 2" MALE IRON PIPE THREAD BY 2" PACK JOINT (COMPRESSION FITTING) FOR COPPER, FORD C14-77, MUELLER NO. H-15451, OR EQUAL.

(E) 2" COPPER TUBING, TYPE K.

(F) 2" STREET ELL, BRASS, FEMALE IRON PIPE THREAD BY FEMALE IRON PIPE THREAD.

(G) 2" NIPPLE, BRASS, M.I.P.T. x M.I.P.T., LENGTH AS REQUIRED TO MEET PROPER GRADE.

(H) 2" BRASS AND COPPER METER SETTER WITH LOW BYPASS:
- FLANGED BALL METER VALVE ON INLET AND OUTLET
- BALL VALVE ON BYPASS
- PADLOCK WINGS ON ALL VALVES
- VERTICAL INLET AND OUTLET, F.I.P.T.
- BUSHING INCLUDED ON OUTLET

FORD VBB77-12B-11-77 WITH LOW BYPASS OR A.Y. MCDONALD 20B712WWFF775 VERTICAL METER SETTER WITH VALVE ROTATED 90 DEG., OR EQUAL.

(I) RIGID METER SPREADER, SUPPLIED BY CITY OF BELLEVUE, TO BE INSTALLED IN METER SETTER BY CONTRACTOR.

(J) METER BOX, EQUAL TO:
CARSON INDUSTRIES 1730-18 BCFXL METER BOX AND 1730 COVER WITH MAX VIEW READER DOOR IN NON-TRAVELED AREAS. OLYMPIC FOUNDRY SM30 IN SIDEWALK AND AREAS WITH VEHICULAR TRAFFIC.

(K) TWO PIECE CAST IRON VALVE BOX TO FIT, EQUAL TO RICH SEATTLE TYPE #045 - WITH RECESSED HANDLE LID. SEE DETAIL W-11.

NOTES:

1. SERVICE LINE SHALL BE PERPENDICULAR TO THE WATERMAIN, UNLESS OTHERWISE APPROVED BY THE ENGINEER.
2. BYPASS WILL BE LOCKED OFF BY CONSTRUCTION INSPECTOR WHEN METER SPREADER IS INSTALLED.
3. METER WILL BE SUPPLIED AND INSTALLED BY THE CITY OF BELLEVUE.

City of Bellevue

WATER UTILITY

TITLE

2" DOMESTIC WATER SERVICE
(COMMERCIAL AND MULTI-FAMILY)

JANUARY 2013

NO SCALE

NO. W-30

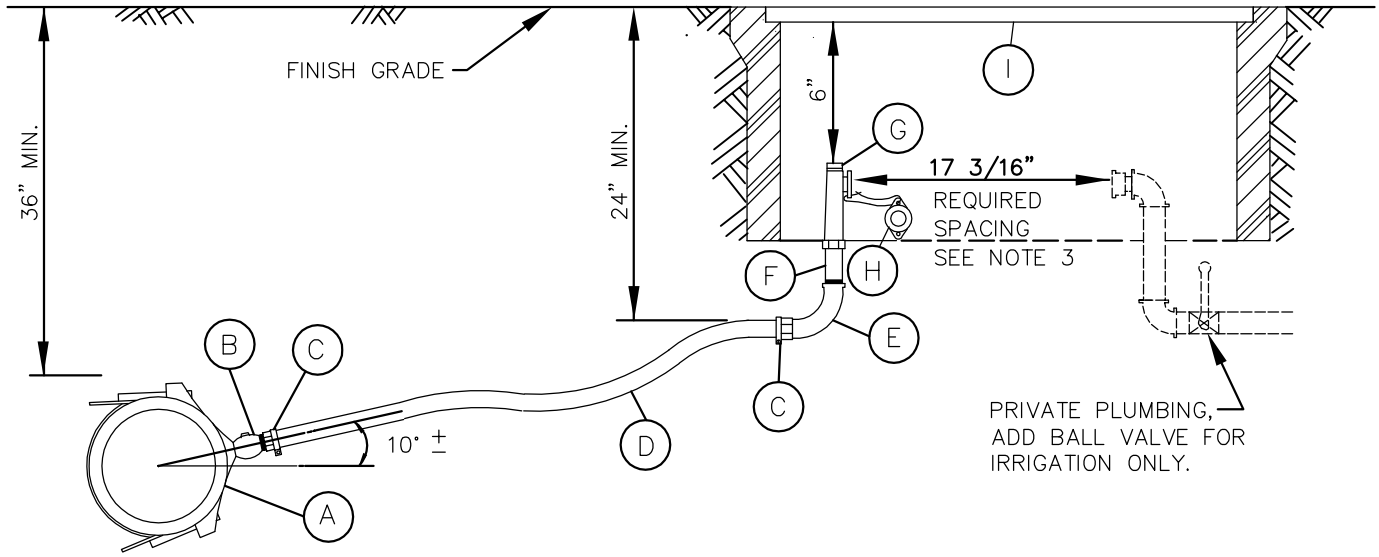

(A) EPOXY OR NYLON COATED HIGH TENSILE D.I. SERVICE SADDLE W/ DOUBLE STAINLESS STEEL STRAP AND EPOXY COATED BOSS, 2" AWWA TAPER (CC) TAP, ROMAC 202S, OR EQUAL, SIZE AS REQUIRED.

(B) BALL CORPORATION STOP, 2" AWWA TAPER (CC) INLET BY 2" MALE IRON PIPE THREAD OUTLET WITH BALL VALVE (OR EQUAL LOW-FRICTION VALVE), FORD BALLCORP FB400-7, MUELLER ORISEAL NO. H-9968, OR EQUAL.

(C) COUPLING, 2" FEMALE IRON PIPE THREAD BY 2" PACK JOINT (COMPRESSION FITTING) FOR COPPER, FORD C14-77, MUELLER NO. H-15451, OR EQUAL.

(D) 2" COPPER TUBING, TYPE K.

(E) 2" STREET ELL, BRASS, FEMALE IRON PIPE THREAD BY FEMALE IRON PIPE THREAD.

(F) 2" NIPPLE, BRASS, M.I.P.T. x M.I.P.T., LENGTH AS REQUIRED TO MEET PROPER GRADE.

(G) 2" ANGLE METER VALVE WITH PADLOCK WINGS, FEMALE IRON PIPE BY FLANGED END FOR METER, FORD FV13-777W, MUELLER NO. H-14286, OR EQUAL.

(H) 2" COMPANION FLANGE, FORD NO. 7F FLANGE, OR EQUAL. TO BE WIRED OR SECURED TO ANGLE VALVE.

(I) METER BOX, EQUAL TO:
CARSON INDUSTRIES 1730-18 BCFXL METER BOX WITH 1730 COVER WITH MAX VIEW READER DOOR IN NON-TRAVELED AREAS. OLYMPIC FOUNDRY SM30 IN SIDEWALK AND AREAS WITH VEHICULAR TRAFFIC.

NOTES:

1. SERVICE LINE SHALL BE PERPENDICULAR TO THE WATERMAIN, UNLESS OTHERWISE APPROVED BY THE ENGINEER.
2. APPROVED BACKFLOW PREVENTION DEVICE MUST BE INSTALLED PER D.O.H. REQUIREMENTS. IRRIGATION SYSTEM SHALL NOT BE PUT INTO SERVICE UNTIL THE BACKFLOW PREVENTION DEVICE IS APPROVED BY THE CITY OF BELLEVUE WATER QUALITY TECHNICIAN.
3. CUSTOMER'S SIDE OF SERVICE SHALL NOT BE PLUMBED INSIDE THE METER BOX UNTIL THE METER IS SET.
4. METER WILL BE SUPPLIED AND INSTALLED BY THE CITY OF BELLEVUE.

City of Bellevue

WATER UTILITY

TITLE

2" IRRIGATION WATER SERVICE

JANUARY 2013

NO SCALE

NO. W-31

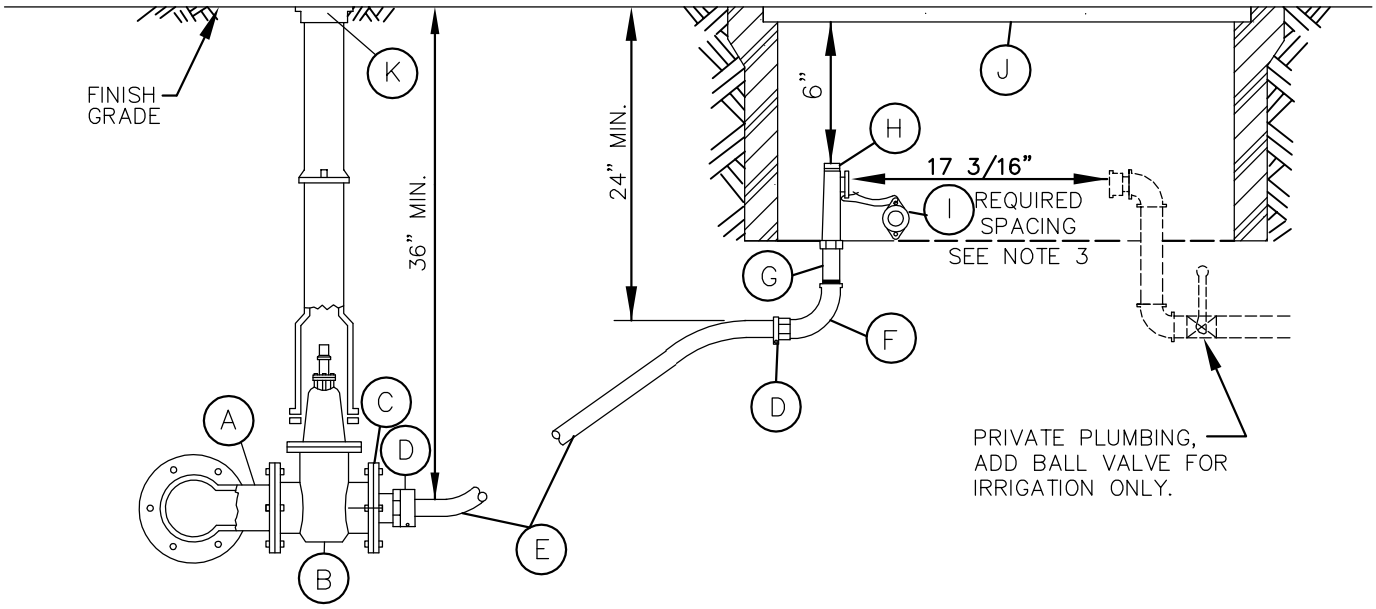

(A) DUCTILE IRON TEE WITH 4" BRANCH, FL. WITH (3) GATE VALVES (ON NEW MAINS), TAPPING TEE WITH 4" BRANCH, FL. WITH (1) GATE VALVE (ON EXISTING MAINS).

(B) 4" GATE VALVE, FL.

(C) 4" REDUCING COMPANION FLANGE WITH 2" TAP.

(D) COUPLING, 2" MALE IRON PIPE THREAD BY 2" PACK JOINT (COMPRESSION FITTING) FOR COPPER, FORD C14-77, MUELLER NO. H-15451, OR EQUAL.

(E) 2" COPPER TUBING, TYPE K.

(F) 2" STREET ELL, BRASS, FEMALE IRON PIPE THREAD BY FEMALE IRON PIPE THREAD.

(G) 2" NIPPLE, BRASS, M.I.P.T. x M.I.P.T., LENGTH AS REQUIRED TO MEET PROPER GRADE.

(H) 2" ANGLE METER VALVE WITH PADLOCK WINGS, FEMALE IRON PIPE BY FLANGE END FOR METER, FORD FV13-777W, MUELLER NO. H-14286, OR EQUAL.

(I) 2" COMPANION FLANGE, FORD NO. 7F FLANGE, OR EQUAL. TO BE WIRED OR SECURED TO ANGLE VALVE.

(J) METER BOX, EQUAL TO:
CARSON INDUSTRIES 1730-18 BCFXL METER BOX WITH 1730 COVER WITH MAX VIEW READER DOOR IN NON-TRAVELED AREAS. OLYMPIC FOUNDRY SM30 IN SIDEWALK AND AREAS WITH VEHICULAR TRAFFIC.

(K) TWO PIECE CAST IRON VALVE BOX TO FIT, EQUAL TO RICH SEATTLE TYPE #045 - WITH RECESSED HANDLE LID. SEE DETAIL W-11.

NOTES:

1. SERVICE LINE SHALL BE PERPENDICULAR TO THE WATERMAIN, UNLESS OTHERWISE APPROVED BY THE ENGINEER.
2. APPROVED BACKFLOW PREVENTION DEVICE MUST BE INSTALLED PER D.O.H. REQUIREMENTS. IRRIGATION OR FIRE SPRINKLER SYSTEM SHALL NOT BE PUT INTO SERVICE UNTIL THE BACKFLOW PREVENTION DEVICE IS APPROVED BY THE CITY OF BELLEVUE WATER QUALITY TECHNICIAN.
3. CUSTOMER'S SIDE OF SERVICE SHALL NOT BE PLUMBED INSIDE THE METER BOX UNTIL THE METER IS SET.
4. METER WILL BE SUPPLIED AND INSTALLED BY THE CITY OF BELLEVUE.
5. SEE DETAIL W-55 FOR VALUE MARKER TO BE LOCATED IN VALUE BOX CONNECTION TO MAIN. FOR FIRELINE SERVICE ONLY.

City of Bellevue

WATER UTILITIES

TITLE 2" IRRIGATION OR FIRE SPRINKLER WATER SERVICE (COMMERCIAL AND MULTI-FAMILY)

JANUARY 2013

NO SCALE

NO. W-32

MATERIALS LIST – (ALL SIZES ARE SAME AS METER UNLESS OTHERWISE LISTED)

1. 1–MECH. CPLG. TO FIT, EQUAL TO ROMAC 501
2. 1–4"x3" REDUCER, P.E.xM.J. (FOR 3" SERVICE ONLY)
3. 1–TEE, M.J. x FL.
4. 1–GATE VALVE, F.L.x M.J. (W/VALVE BOX & COVER)
5. 3–D.I. PIPE, P.E., LENGTH AS REQUIRED
6. 2–90° BEND, M.J.
7. 2–D.I. PIPE, P.E.xFL., LENGTH AS REQUIRED.
8. 1–EPOXY OR NYLON COATED SERVICE SADDLE, FORD FC202 (TAP POINTED UP AT 12–O'CLOCK) OR EQUAL, 1–CORPORATION STOP, AWWA TAPER(CC) x M.I.P.T., FORD FB400–7, WITH 2" F.I.P.T. x 2 1/2" M.N.S.T. ADAPTOR AND CAP (2 1/2" F.N.S.T.)
9. 3–GATE VALVE, FL.
10. SENSUS OMNI C2 METER W/ INTERNAL STRAINER, W/ELECTRONIC RESOLUTION (100'S OF CUBIC FEET FOR 3" METER, 500 CUBIC FEET FOR 4–6" METER) REGISTER).
11. 1–D.I. ADAPTER FL. x P.E., LENGTH TO FIT.
12. 2–FL.xCPLG. ADAPTER, EQUAL TO SMITH–BLAIR 912.
13. WELDED FL. RESTRAINT OR MEGA–LUG MID–SPAN RESTRAINT AND THRUST BLOCK ADJACENT TO VAULT SEE STANDARD DETAIL W–56.
14. PRECAST CONC. VAULT BY UTILITY VAULT CO. (SEE TABLE FOR MODEL NO.) W/TWO DIAMOND PLATE DOORS RATED FOR H–30 LOADING.
15. 1–2" BRASS NIPPLE, M.I.P.T.xM.I.P.T., 6" LONG, CONNECT TO TEST PORT OF COMPOUND METER. BALL VALVE FORD FB1000 FIPTxFIPT SIZED TO FIT OMNI C2 FLUSHPORT.
16. 2" M.I.P.T. X 2 1/2" MNST ADAPTOR AND CAP (2 1/2" FNST).
17. TR/PL SENSOR (TO MOUNT IN VAULT ACCESS DOOR).
18. 2–ADJUSTABLE STANCHION BOLTED TO FLOOR.
19. 1–GALVANIZED STEEL LADDER TO BE ATTACHED TO VAULT. THE FIRST STEP SHALL BE MAX. 8" BELOW TOP OF COVER.
20. 1–BILCO LADDER UP, LU–2 MODEL AT TOP OF THE LADDER. SEE DETAIL W–19.
21. 1– TEE, FL.

METER SIZE	MAIN–LINE	BYPASS	CORP STOP FOR FLUSH PORT–SIZE	MIN. CLEARANCES				VAULT MODEL	VAULT COVER * (W/SPECIAL OFFSET)
				A	B	C	D		
3"	4"D.I.	4" D.I.	2"	10"	6"	2'–8"	6"	577–LA	57TL–2–332P
4"	4"D.I.	4" D.I.	2"	12"	6"	2'–8"	6"	676–WA	676–TW–2–332P
6"	6"D.I.	6" D.I.	2"	12"	6"	3'–2"	6"	4484–LA	4484–TL2–332P

* COVER MODIFIED PER NOTE 6.

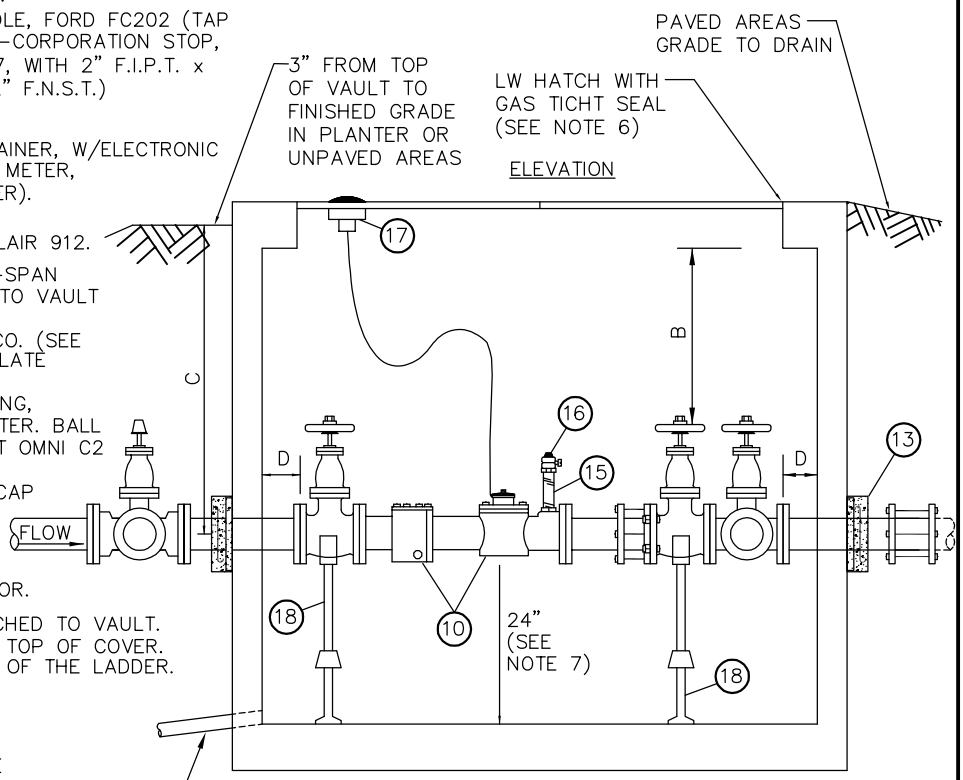

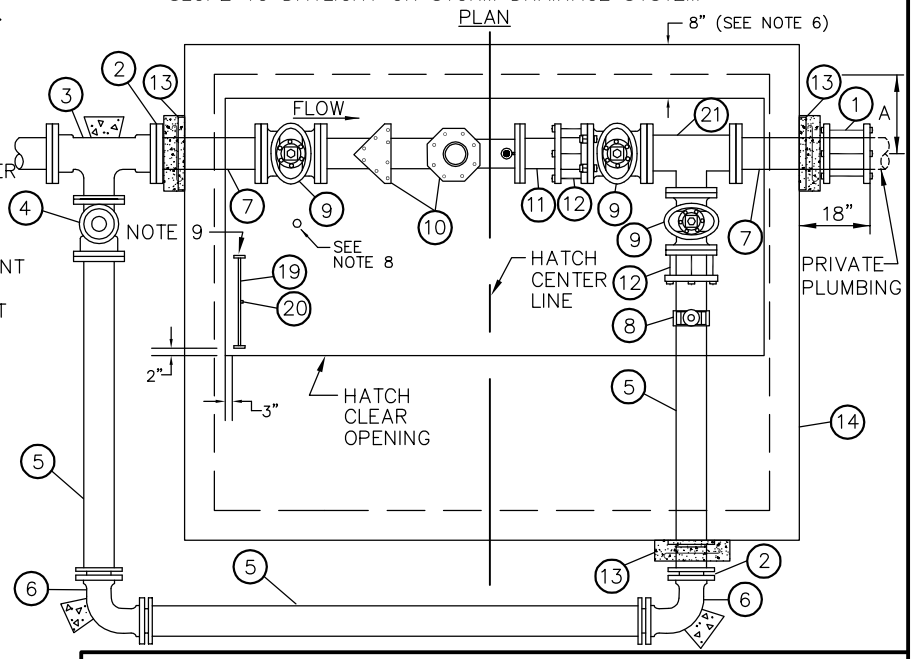

NOTES:

1. ALL MATERIALS, INCLUDING METER SHALL BE FURNISHED BY CONTRACTOR.
2. ALL PIPE & FITTINGS 3" & LARGER SHALL BE CEMENT LINED DUCTILE IRON, CLASS 52 MINIMUM.
3. TEE WITH (3) GATE VALVES REQUIRED AT DISTRIBUTION MAIN.
4. VAULTS SHALL NOT BE INSTALLED IN AREAS W/VEHICULAR TRAFFIC.
5. IN CENTRAL BUSINESS DISTRICT, 3" THROUGH 6" METERS SHALL CONNECT TO WATER MAIN W/8" PIPE (SUBSTITUTE 8"xSERVICE SIZE REDUCER M.J.xP.E., AT UPSTREAM SIDE OF ITEM (3)).
6. VAULT COVER SHALL INCLUDE 2 LOCKING ALUMINUM LW HATCH DOORS (PART NO. HHD–36"x72") DOORS SHALL HAVE SLIP RESISTANT TREATMENT PER SECTION W4–17 OF THE ENGINEERING STANDARDS. DOORS SHALL BE CAST IN COVER WITH 8" SPECIAL OFFSET FROM VAULT WALL, AS SHOWN. COVER TO READ "WATER".
7. PROVIDE 24" CLEARANCE BETWEEN VAULT FLOOR & BOTTOM OF COMPOUND METER. WHERE ELEVATION OF VAULT FLOOR IS TOO LOW TO DRAIN TO DAYLIGHT OR STORM SYSTEM, THIS CLEARANCE CAN BE REDUCED TO A MINIMUM OF 12", IF SUBSTITUTION OF A SHORTER VAULT ALLOWS FLOOR TO DRAIN TO DAYLIGHT OR STORM SYSTEM (APPROVED BY THE UTILITY ON A CASE BY CASE BASIS ONLY). SUBSTITUTE VAULTS ARE AS FOLLOWS:
   3" 575–LA WITH 57TL–2–332P COVER (WITH SPECIAL OFFSET + LW ALUM. HATCH)
   4" 675–WA WITH 675–TW–2–332P COVER (WITH SPECIAL OFFSET + LW ALUM. HATCH)
8. PROVIDE 2 1/4" DIAM. OPENING IN ALUMINUM DOOR FOR TR/PL SENSOR.
9. LADDER TO BE BOLTED TO VAULT FLOOR AND TO VAULT WALL AT THREE LOCATIONS. RUNGS SHALL BE SPACED AT 12" ON CENTER.
10. ALL FITTINGS OUTSIDE VAULT SHALL INCLUDE THRUST BLOCKING AND JOINT RESTRAINT DEVICES.
11. PIPE, FITTINGS, VALVES OUTSIDE VAULT SHALL BE 4" FOR 3" SERVICE INSTALLATION.
12. MINIMUM 2' OF LEVEL, UNOBSTRUCTED AREA AROUND HATCHES.

JANUARY 2013 NO SCALE

City of Bellevue WATER UTILITY

TITLE

3" TO 6" DOMESTIC METER INSTALLATION

NO. W–33

MATERIALS LIST – (ALL SIZES ARE SAME AS METER UNLESS OTHERWISE LISTED)

1. 1–MECH CPLG. TO FIT, EQUAL TO ROMAC 501
2. 1–TEE, M.J. x FL.
3. 1–GATE VALVE, F.L.x M.J. (W/VALVE BOX & COVER)
4. 3–D.I. PIPE, P.E., LENGTH AS REQUIRED
5. 2–90° BEND, M.J.
6. 2–D.I. PIPE, P.E.xFL., LENGTH AS REQUIRED.
7. 1–EPOXY OR NYLON COATED SERVICE SADDLE, FORD FC202 OR FCD202 OR EQUAL (TAP POINTED UP AT 12–O'CLOCK). 1–CORPORATION STOP, AWWA TAPER(CC) x M.I.P.T. FORD FB1000–7, WITH 2" F.I.P.T. x 2 1/2" M.N.S.T. ADAPTER PLUS CAP (2 1/2" F.N.S.T.).
8. 3–GATE VALVE, FL.
9. 1–NEPTUNE HIGH PERFORMANCE PROTECTUS III FIRE SERVICE METER WITH "E–CODER" SOLID STATE ABSOLUTE ENCODER REGISTERS THAT REMOTELY READ IN 100 CUBIC FOOT INCREMENTS.
10. 1–D.I. ADAPTER FL. x P.E., (LENGTH TO FIT)
11. 2–FLxCPLG. ADAPTER, EQUAL TO SMITH–BLAIR 912.
12. MEGA–LUG MID–SPAN RESTRAINT AND THRUST BLOCK ADJACENT TO VAULT SEE STANDARD DETAIL W–56.
13. PRECAST CONC. VAULT BY UTLITY VAULT CO. (SEE TABLE FOR MODEL NO.) W/ THREE DIAMOND PLATE DOORS RATED FOR H–30 LOADING.
14. 1–TEE, FL.
15. SENSOR (TO MOUNT IN VAULT ACCESS DOOR.)
16. 4–ADJUSTABLE STANCHIONS BOLTED TO FLOOR.
17. 1–GALVANIZED STEEL LADDER (1'–4"WIDE) TO BE BOLTED TO VAULT FLOOR AND TO VAULT WALL AT THREE LOCATIONS. RUNGS SHALL BE SPACED AT 12" ON CENTER. LADDER SHALL INCLUDE BILCO MODEL LU–2 LADDER–UP, SEE DETAIL 19.
18. 2" TEST PORT, 2" EPOXY OR NYLON COATED SERVICE SADDLE, ROMAC 202NS (TOP UP), 2"–CD12PSTUP AWWA TAPER(CC) x M.I.P.T. FORD FB400–7 WITH 2" F.I.P.T. x 2 1/2" M.N.S.T. ADAPTOR PLUS CAP (2–1/2" F.N.S.T.).

METER SIZE	MAIN–LINE	BYPASS	CORP STOP FOR FLUSH PORT–SIZE	MIN. CLEARANCES				VAULT MODEL	VAULT COVER * (W/SPECIAL OFFSET)
				A	B	C	D		
8"	8"D.I.	8" D.I.	2"	21"	6"	5'–0"	6"	712–LA	712TL–3–332P

* COVER MODIFIED PER NOTE 5.

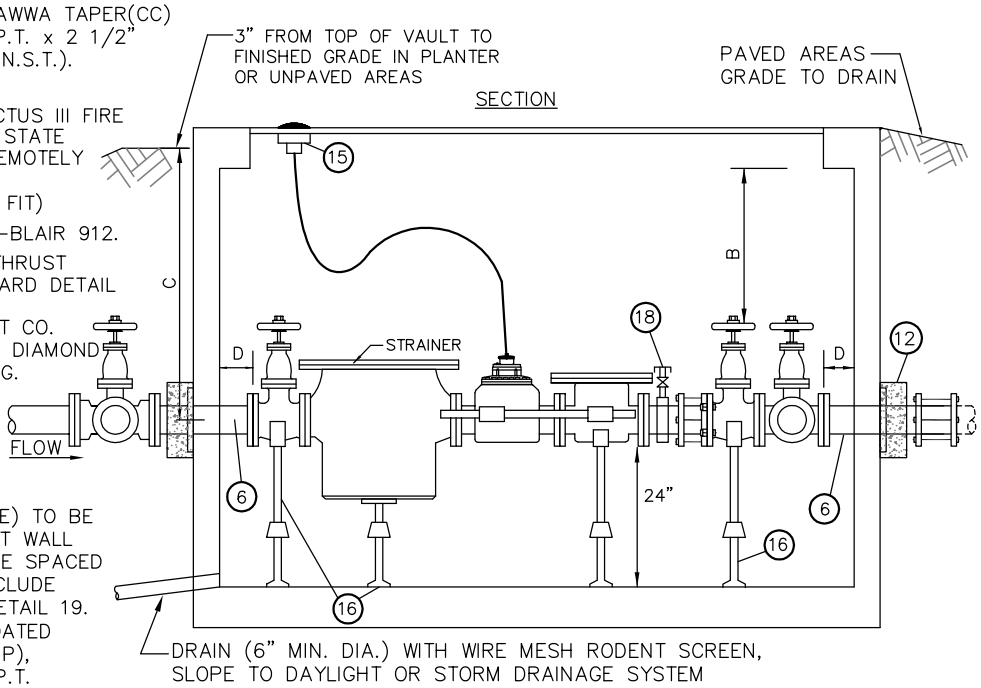

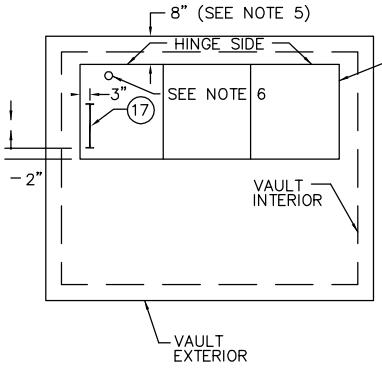

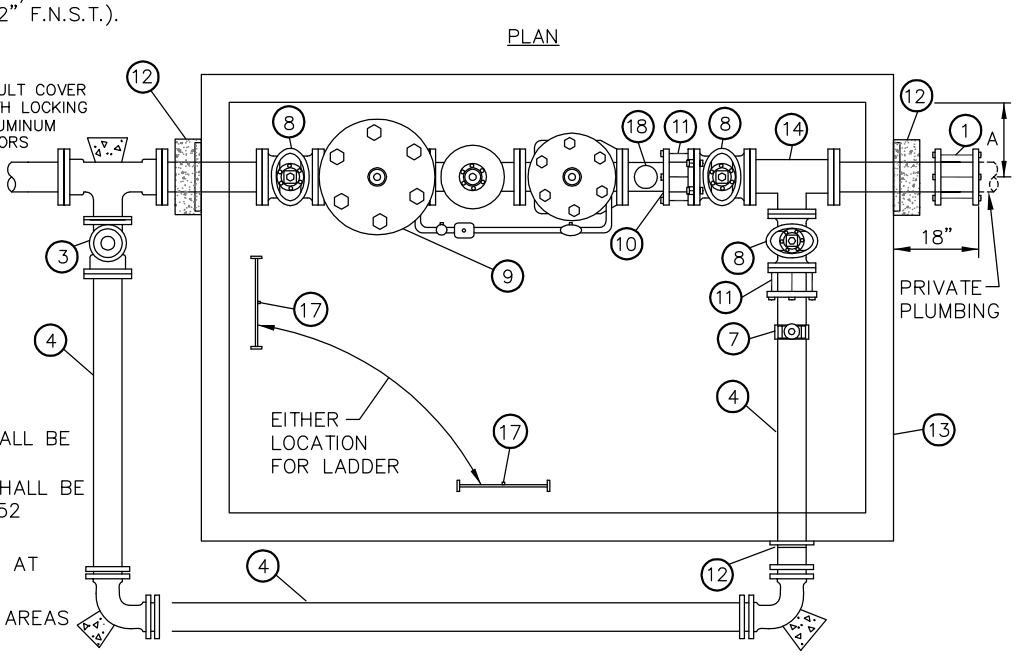

NOTES:

1. ALL MATERIALS, INCLUDING METER SHALL BE FURNISHED BY CONTRACTOR.
2. ALL PIPE & FITTINGS 3" & LARGER SHALL BE CEMENT LINED DUCTILE IRON, CLASS 52 MINIMUM.
3. TEE WITH (3) GATE VALVES REQUIRED AT DISTRIBUTION MAIN.
4. VAULTS SHALL NOT BE INSTALLED IN AREAS W/VEHICULAR TRAFFIC.
5. VAULT COVER SHALL INCLUDE 3 LOCKING ALUMINUM LW HATCH DOORS (PART NO. HHS–42"x42") WITH SLIP RESISTANT TREATMENT PER SECTION W4–17 OF THE ENGINEERING STANDARDS. DOORS SHALL BE CAST IN COVER WITH 8" SPECIAL OFFSET FROM VAULT WALL, AS SHOWN. COVER TO READ "WATER".
6. PROVIDE 2 1/4" DIAM. OPENING IN STEEL DOOR FOR SENSOR.
7. ALL FITTINGS OUTSIDE VAULT SHALL INCLUDE THRUST BLOCKING AND JOINT RESTRAINT DEVICES.
8. MINIMUM 2' OF LEVEL, UNOBSTRUCTED AREA AROUND HATCHES.

City of Bellevue

WATER UTILITY

TITLE

8" DOMESTIC METER INSTALLATION

NO. W–34

JANUARY 2013

NO SCALE

MATERIALS LIST– (ALL SIZES ARE SAME AS METER UNLESS OTHERWISE LISTED)

1. 2–MECH. CPLG. TO FIT, EQUAL TO ROMAC 501 (4"x3" REDUCER, M.J. FOR 3" METER INSTALLATION ON UPSTREAM SIDE OF VAULT).
2. 2–GATE VALVE, FLANGE.
3. 1–SENSUS OMNI C2 METER WITH INTERNAL STRAINER WITH ELECTRONIC REGISTER RESOLUTION (100'S OF CUBIC FEET FOR 3" METER, 500 CUBIC FEET FOR 4–6" METER) REGISTER.
4. 1–D.I. ADPT. FL.xPE. LENGTH TO FIT.
5. 1–CPLG. ADPT., FL. ROMAC – FCA 501.
6. PRECAST CONC. VAULT BY UTILITY VAULT CO. (577–LA.) WITH TWO DIAMOND PLATE DOORS RATED FOR H–30 LOADING W/ 8" OFFSET, SEE NOTE 7.
7. WELDED FL. RESTRAINT OR MEGALUG MID–SPAN RESTRAINT AND THRUST BLOCK ADJACENT TO VAULT STANDARD DETAIL W–56.
8. CONNECT THE FOLLOWING TO METER TEST PORT. 1–2" BRASS NIPPLE, M.I.P.T. x M.I.P.T. AND 2" F.I.P.T. x 2 1/2" M.N.S.T. PLUS CAP (2 1/2" M.N.S.T.), 6" LONG 1–2" BALL VALVE, F.I.P.T. X M.I.P.T. FORD B81–777
9. 1–GALVANIZED STEEL LADDER TO BE ATTACHED TO VAULT. SEE NOTE 11.
10. TR/PL SENSOR (TO MOUNT IN VAULT ACCESS DOOR).

PLAN

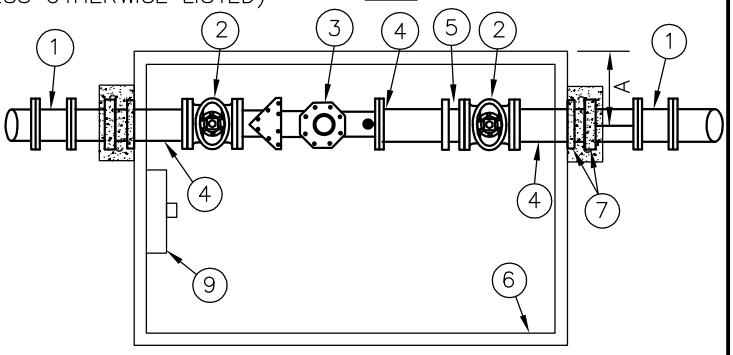

8. MINIMUM 2' OF LEVEL, UNOBSTRUCTED AREA AROUND HATCHES.
9. PROVIDE 24" CLEARANCE BETWEEN VAULT FLOOR & BOTTOM OF METER, WHERE ELEVATION OF VAULT FLOOR IS TOO LOW TO DRAIN TO DAYLIGHT OR STORM SYSTEM. THIS CLEARANCE CAN BE REDUCED TO A MINIMUM OF 12", IF SUBSTITUTION OF A SHORTER VAULT ALLOWS FLOOR TO DRAIN TO DAYLIGHT OR STORM SYSTEM (APPROVED BY THE UTILITY ON A CASE BY CASE BASIS ONLY.) SUBSTITUTE VAULT AS FOLLOWS: 575–LA WITH LW PRODUCTS HHD–48"x48" COVER (WITH SPECIAL OFFSET) ALLOWED ONLY ON 3" AND 4" METERS.
10. PROVIDE 2 1/4" DIAM. OPENING IN ALUMINUM HATCH DOOR FOR TR/PL SENSOR.
11. LADDER TO BE BOLTED TO VAULT FLOOR AND TO VAULT WALL AT THREE LOCATIONS. RUNGS SHALL BE SPACED AT 12" ON CENTER. LADDER SHALL INCLUDE BILCO MODEL LU–2 LADDER–UP. SEE DETAIL 19.
12. A FULL FLOW BYPASS MAY BE REQUIRED, DEPENDING ON APPLICATION. TO BE DETERMINED BY THE CITY.

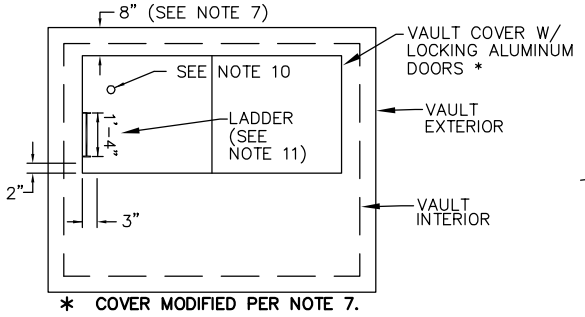

* COVER MODIFIED PER NOTE 7.

ELEVATION

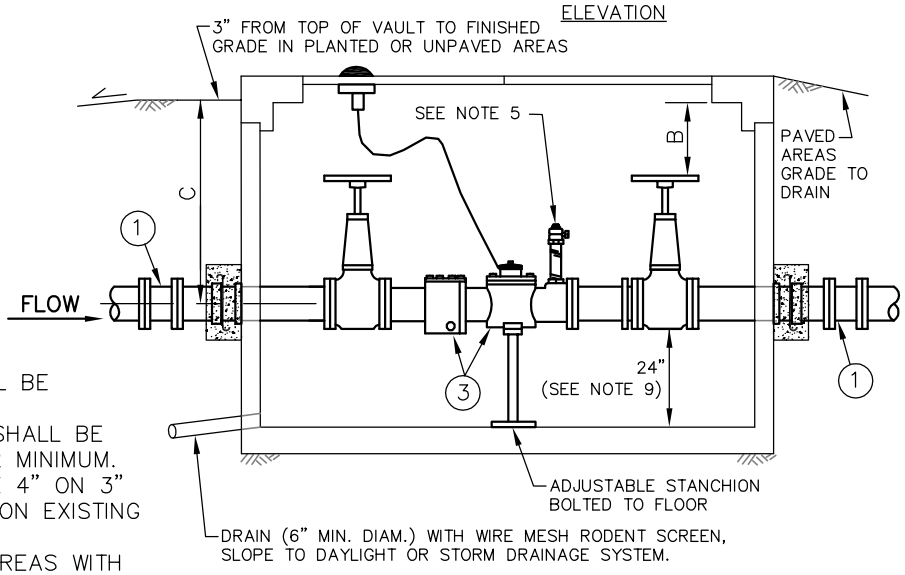

NOTES:

1. ALL MATERIALS INCLUDING METER SHALL BE FURNISHED BY CONTRACTOR.
2. ALL PIPE & FITTINGS 3" AND LARGER SHALL BE CEMENT LINED DUCTILE IRON, CLASS 52 MINIMUM.
3. PIPING FROM MAIN TO VAULT SHALL BE 4" ON 3" METER INSTALLATION. TEE WITH VALVE ON EXISTING MAIN REQUIRED.
4. VAULTS SHALL NOT BE INSTALLED IN AREAS WITH VEHICULAR TRAFFIC.
5. TEST PORT NOZZLE SHALL BE DIRECTED UPWARD UNLESS OTHERWISE DIRECTED, (SEE ITEM 8).
6. IN CENTRAL BUSINESS DISTRICT, CONNECT TO WATER MAIN WITH 8" PIPE. SUBSTITUTE 8" X SERVICE SIZE REDUCER, MJ, FOR ITEM 1 ON UPSTREAM SIDE OF VAULT.
7. VAULT COVER SHALL INCLUDE 2 LOCKING ALUMINUM LW HATCH DOORS (PART NO. HHD–48"x48") WITH SLIP RESISTANT TREATMENT PER SECTION W4–17 OF THE ENGINEERING STANDARDS. DOORS SHALL BE CAST IN COVER WITH 8" SPECIAL OFFSET FROM VAULT WALL, AS SHOWN. COVER TO READ "WATER".

METER SIZE	MAIN–LINE	CORP. STOP FOR METER TESTING SIZE	MINIMUM CLEARANCES			
			A	B	C	D
3"	4"D.I.	2"	10"	6"	2'–8"	9"
4"	4"D.I.	2"	12"	6"	2'–8"	9"
6"	6"D.I.	2"	13"	6"	3'–2"	6"

City of Bellevue

WATER UTILITY

TITLE

3" TO 6" IRRIGATION METER INSTALLATION

JANUARY 2013

NO SCALE

NO. W–35

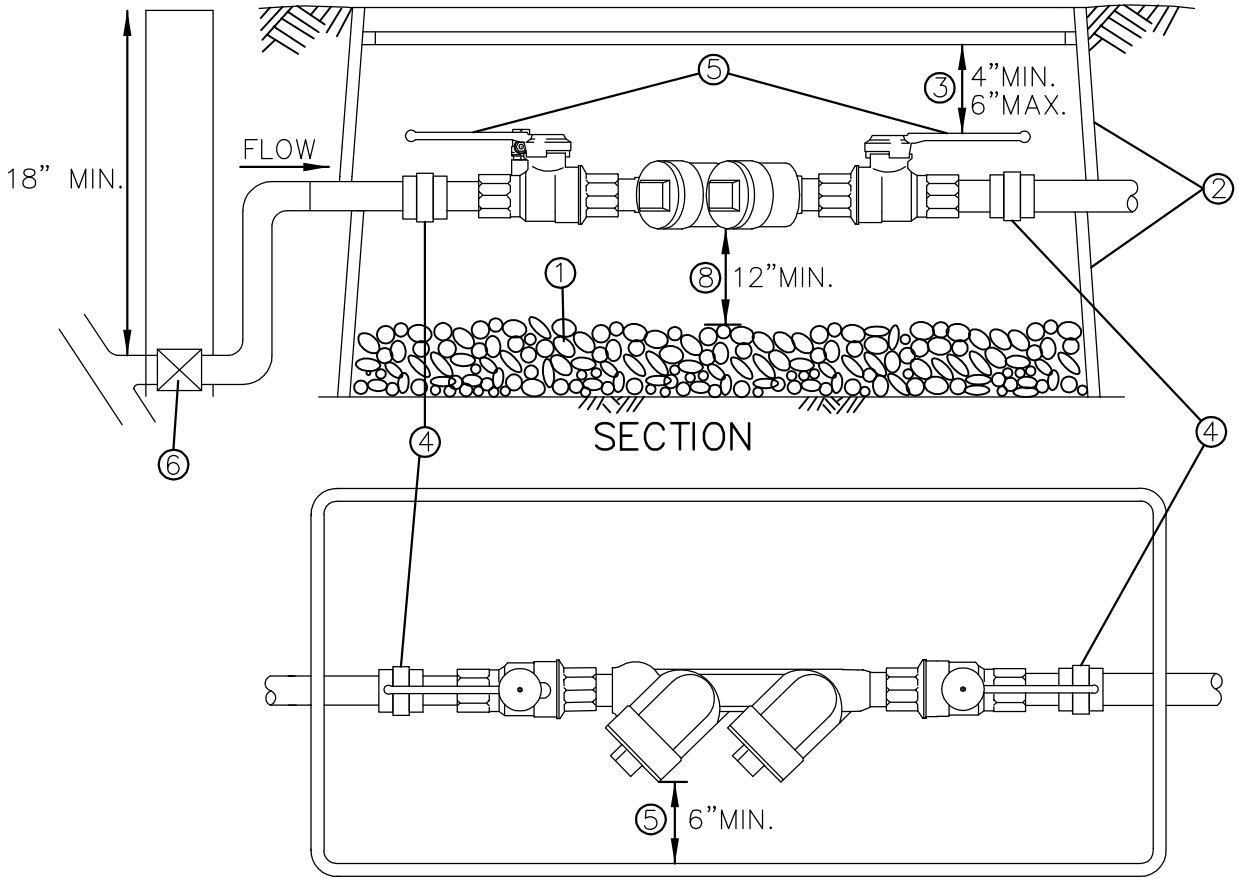

PLAN

1. 1" ROUND WASHED GRAVEL BY 6" DEEP ON BOTTOM OF BOX
2. ENCLOSE 2" & SMALLER D.C.V.A. IN TWO METER BOXES STACKED ON TOP OF EACH OTHER OR, OVERSIZED BOX. MUST HAVE REMOVABLE COVER. BOXES TO BE LOCATED IN SIDEWALK AND AREAS WITH VEHICULAR TRAFFIC SHALL BE METAL, EQUAL TO OLYMPIC FOUNDRY SM30. BOXES IN OTHER NON-TRAFFIC AREAS TO BE CARSON INDUSTRIES 1730-18 BCFXL METER BOX WITH 1730 COVER.
3. MAXIMUM OF 6" DISTANCE BETWEEN UNDERSIDE OF LID AND HIGHEST POINT OF DEVICE.
4. (2) UNIONS.
5. WHEN TEST-COCKS ARE FACING SIDEWAYS THERE MUST BE A 6" MIN. CLEARANCE BETWEEN THEM AND SIDE OF BOX.
6. PER PLUMBING CODE REQUIREMENT, IRRIGATION SYSTEMS MUST HAVE SHUT OFF INSTALLED AS SHOWN. FEMALE FITTINGS ARE PROHIBITED IN CONJUNCTION WITH METALLIC MALE FITTINGS.

NOTES:

1. ALL INSTALLATIONS MUST MEET MINIMUM STANDARDS OF THE UNIFORM PLUMBING CODE AND WSDOH APPROVED INSTALLATIONS LIST.
2. TESTING IS REQUIRED BY A WASHINGTON STATE DEPARTMENT OF HEALTH CERITFIED BACKFLOW ASSEMBLY TESTER UPON INSTALLATION AND ANNUALLY THEREAFTER. ASSEMBLY TO BE MAINTAINED BY OWNER.

City of Bellevue

WATER UTILITY

TITLE

1" TO 2" DOUBLE CHECK VALVE ASSEMBLY FOR IRRIGATION SYSTEMS (OUTSIDE INSTALLATION)

JANUARY 2013

NO SCALE

NO. W-36

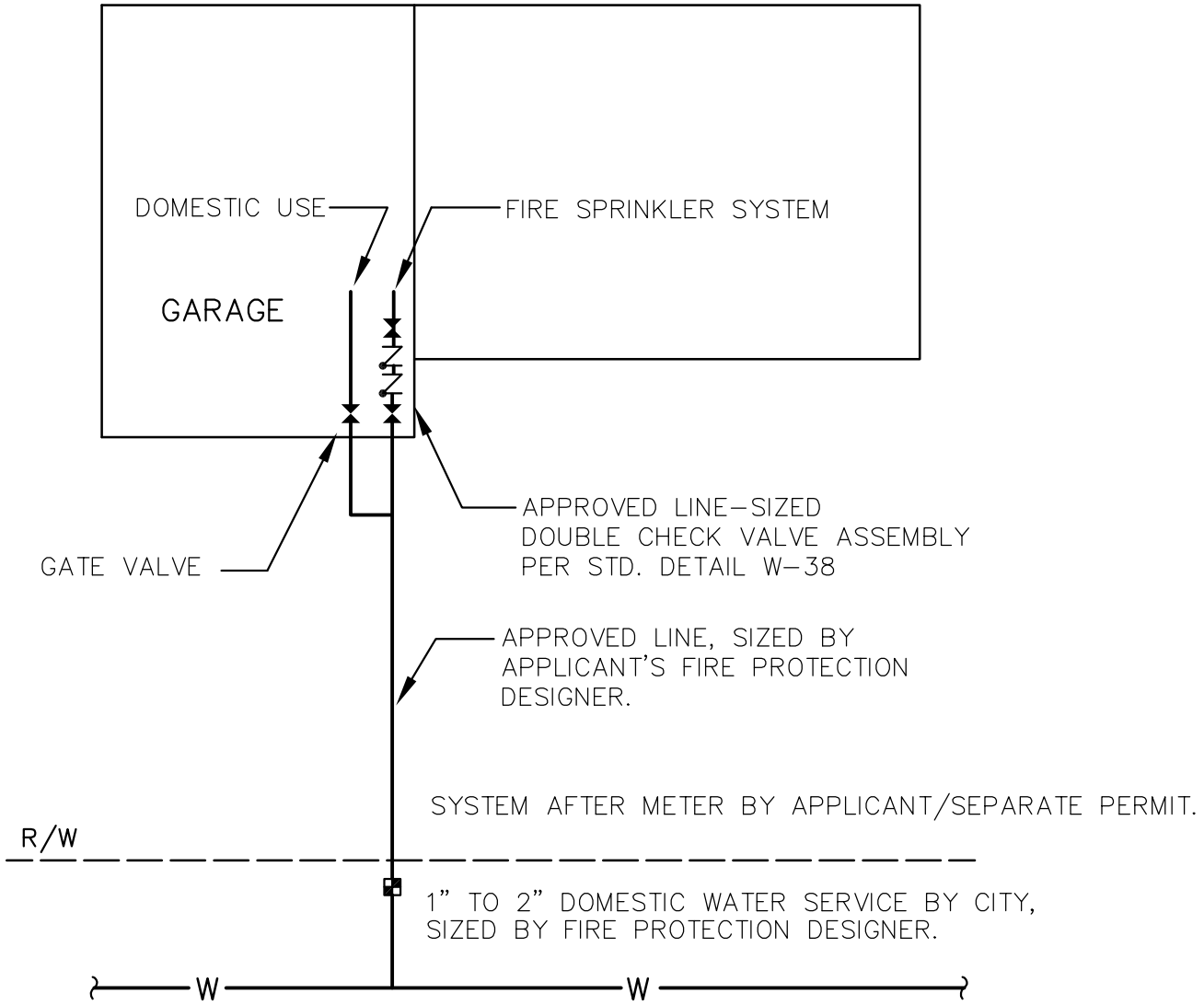

NOTE:

1. TESTING IS REQUIRED BY A WASHINGTON STATE DEPARTMENT OF HEALTH CERTIFIED BACKFLOW ASSEMBLY TESTER UPON INSTALLATION AND ANNUALLY THEREAFTER. ASSEMBLY TO BE MAINTAINED BY OWNER.

City of Bellevue

WATER UTILITY

TITLE

INSIDE DCVA INSTALLATION FOR RESIDENTIAL FIRE SPRINKLER SYSTEMS

JANUARY 2013

NO SCALE

NO. W-37

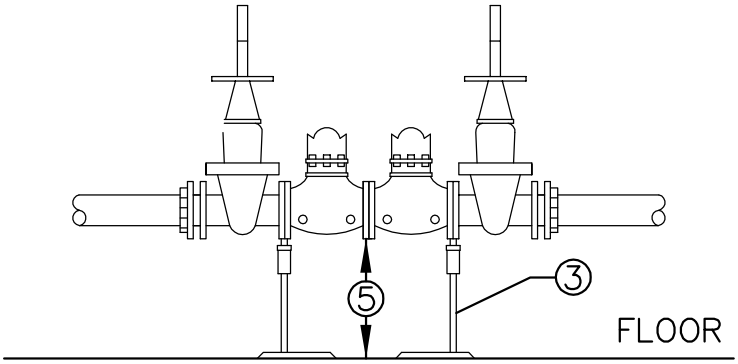

SECTION

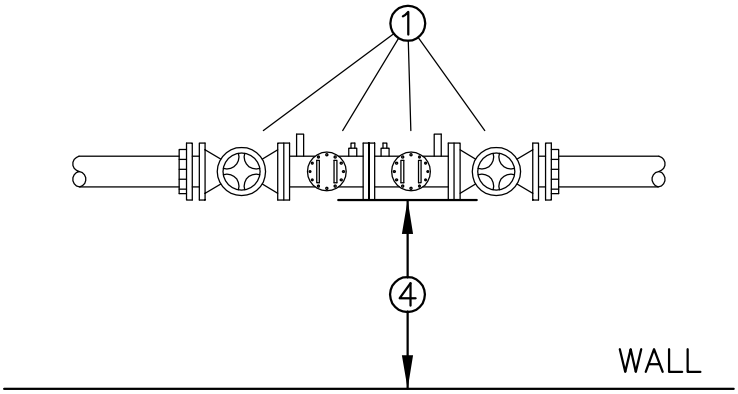

PLAN

NOTES:

1. LINE-SIZED WA STATE APPROVED DOUBLE CHECK VALVE ASSEMBLY. THE D.C.V.A. INCLUDES (2) RESILIENT-SEATED SHUT-OFF VALVES AND (4) RESILIENT-SEATED TEST-COCKS.
2. THE D.C.V.A. MUST BE INSTALLED PER WSDOH APPROVED INSTALLATIONS LIST.
3. (2) SUPPORTS (EITHER WALL OR FLOOR) ONE ON EACH SIDE OF ASSEMBLY, MUST FIRMLY ANCHOR DEVICE. REQUIRED FOR 2 1/2" AND LARGER LINE SIZE.
4. MUST PROVIDE A MINIMUM OF 6" SIDE CLEARANCE BETWEEN D.C.V.A. AND WALL OR OBSTRUCTION.
5. CLEARANCE BETWEEN FLOOR AND ASSEMBLY MUST BE A MINIMUM OF 12" AND A MAXIMUM OF 5'.
6. TESTING IS REQUIRED BY A WASHINGTON STATE DEPARTMENT OF HEALTH CERTIFIED BACKFLOW ASSEMBLY TESTER UPON INSTALLATION AND ANNUALLY THEREAFTER. ASSEMBLY TO BE MAINTAINED BY OWNER.
7. PROTECT AGAINST FREEZING OR DAMAGE. USE HEAT-TAPE IF AREA IS SUBJECT TO FREEZING.
8. INTERIOR WATER APPURTENANCES MUST CONFORM TO UNIFORM PLUMBING CODE REQUIREMENTS.
9. FDC TO BE LOCATED DOWNSTREAM OF DCVA (COMMERCIAL ONLY).

City of Bellevue

WATER UTILITY

TITLE

DOUBLE CHECK VALVE ASSEMBLY (INSIDE INSTALLATION)

JANUARY 2013

NO SCALE

NO. W-38

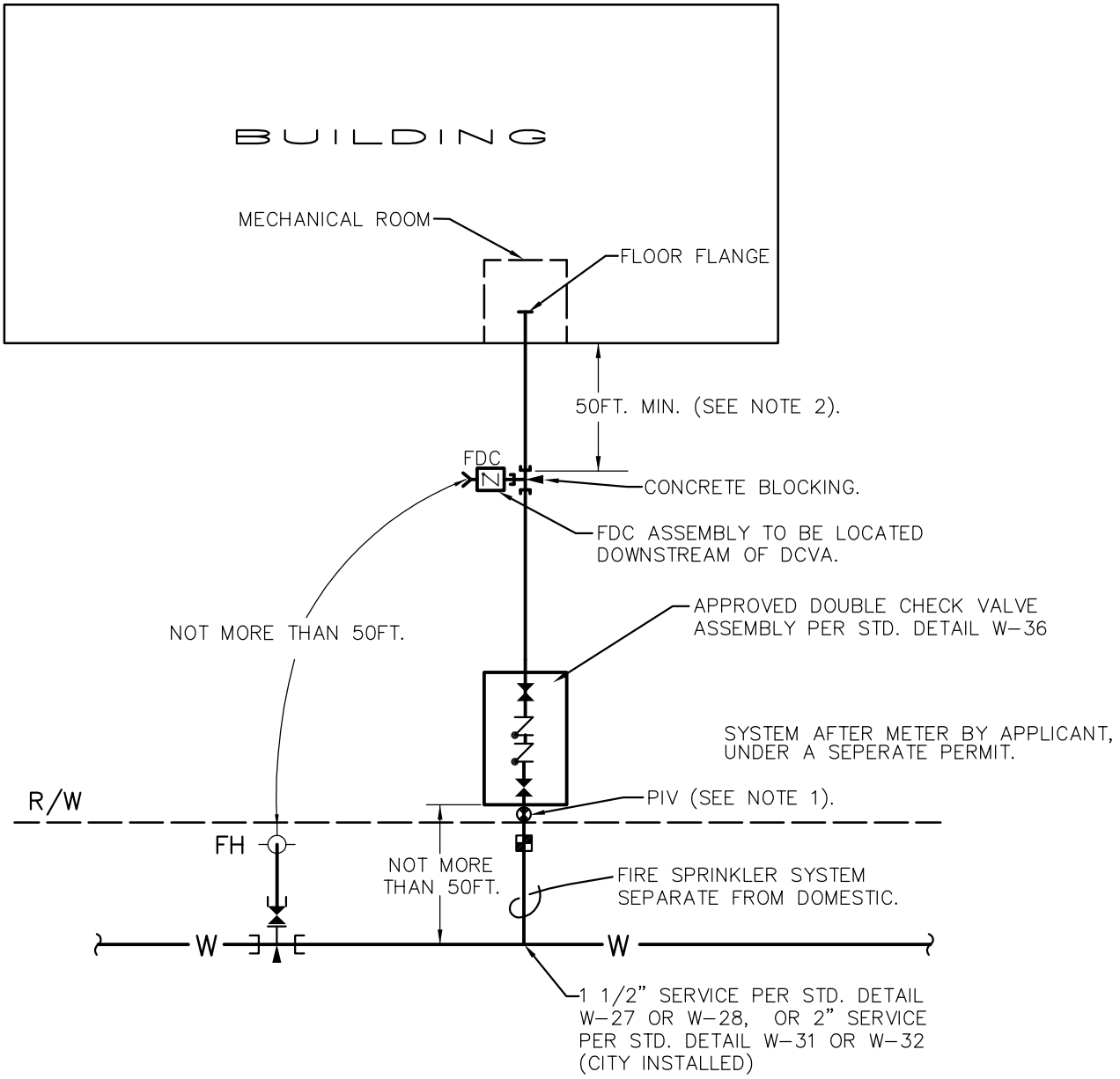

NOTES:

1. PIV MUST BE LOCATED ON THE FIRELINE BETWEEN THE R/W LINE AND THE FDC.
2. FIRE MARSHALL SHALL APPROVE FDC LOCATION IF LESS THAN 50FT. FROM STRUCTURE.
3. TESTING IS REQUIRED BY A WASHINGTON STATE DEPARTMENT OF HEALTH CERTIFIED BACKFLOW ASSEMBLY TESTER UPON INSTALLATION AND ANNUALLY THEREAFTER. ASSEMBLY TO BE MAINTAINED BY OWNER.

City of Bellevue

WATER UTILITY

TITLE

OUTSIDE DCVA INSTALLATION FOR 1 1/2" & 2" COMMERCIAL FIRE SPRINKLER SYSTEMS

NO. W-39

JANUARY 2013

NO SCALE

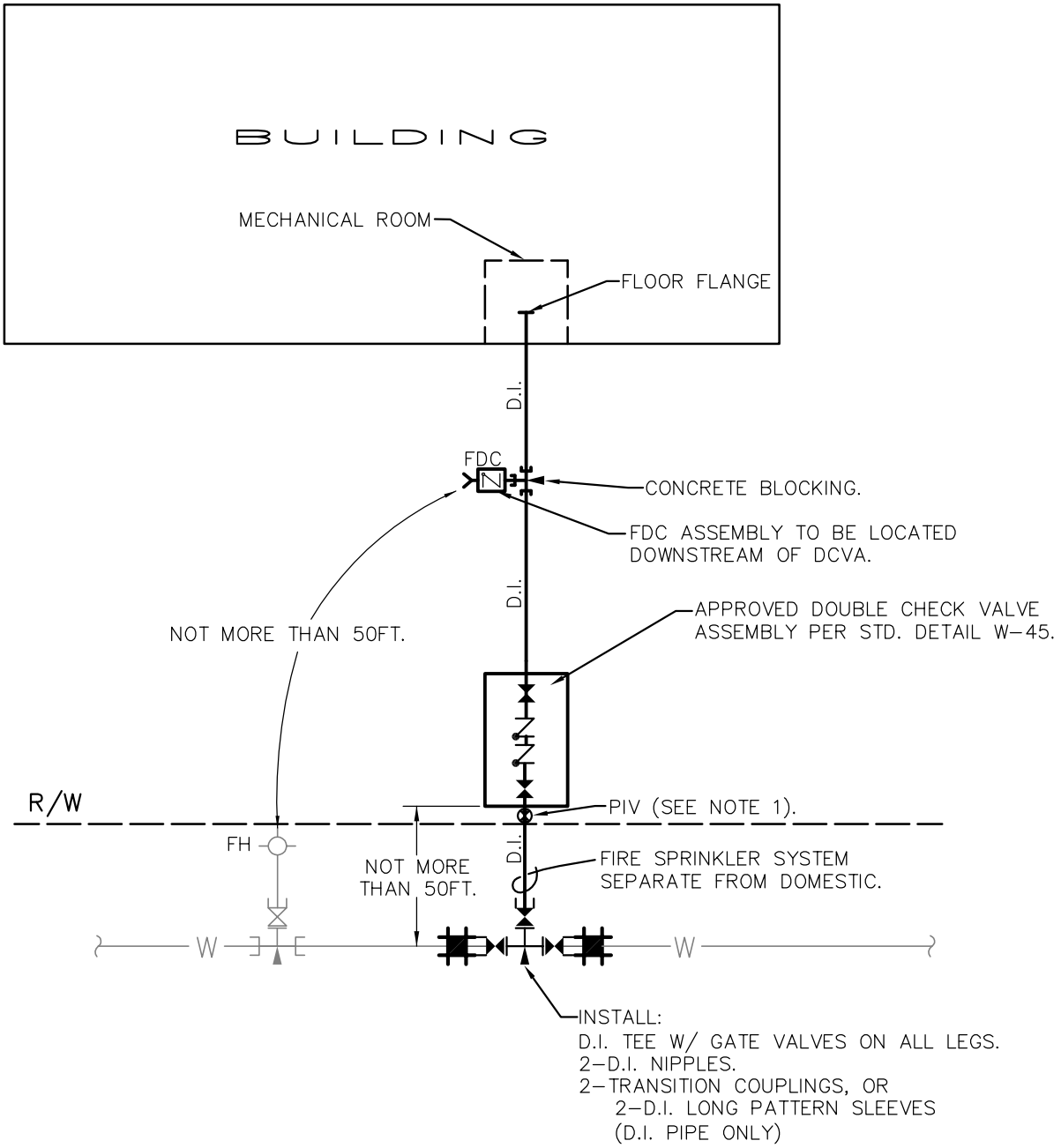

NOTES:

1. WHERE POSSIBLE, PIV SHALL BE LOCATED ON THE FIRELINE BETWEEN THE R/W LINE AND THE FDC.
2. FIRE MARSHALL SHALL APPROVE FDC LOCATION.
3. TESTING IS REQUIRED BY A WASHINGTON STATE DEPARTMENT OF HEALTH CERTIFIED BACKFLOW ASSEMBLY TESTER UPON INSTALLATION AND ANNUALLY THEREAFTER. ASSEMBLY TO BE MAINTAINED BY OWNER.

City of Bellevue

WATER UTILITY

TITLE

OUTSIDE DCVA INSTALLATION FOR 3" AND LARGER COMMERCIAL FIRE SPRINKLER SYSTEMS

NO. W-40

JANUARY 2013

NO SCALE

METER SIZE	MAINLINE	BY PASS	VAULT MODEL	VAULT COVER *
1 1/2"	1 1/2" COPPER	1" BRASS MINIMUM	644-LA	64-2-332P
2"	2" COPPER	1" BRASS MINIMUM	644-LA	64-2-332P

* COVER MODIFIED PER NOTE 9.

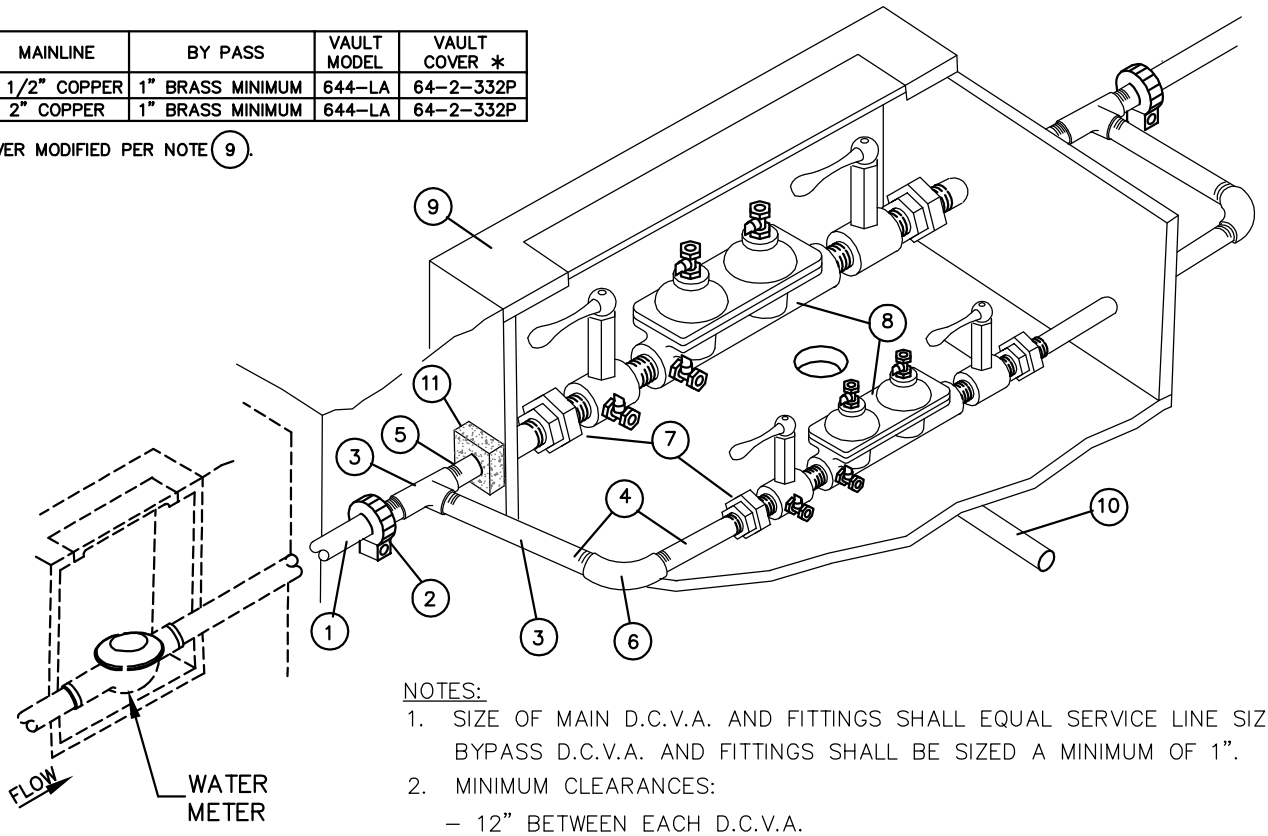

NOTES:

1. SIZE OF MAIN D.C.V.A. AND FITTINGS SHALL EQUAL SERVICE LINE SIZE. BYPASS D.C.V.A. AND FITTINGS SHALL BE SIZED A MINIMUM OF 1".
2. MINIMUM CLEARANCES:
   - 12" BETWEEN EACH D.C.V.A.
   - 12" BETWEEN D.C.V.A. AND SIDE OF VAULT.
   - 12" BETWEEN D.C.V.A. AND VAULT FLOOR.
   - 24" SOIL COVER OVER SERVICE LINE.
3. INSTALL PLUGS IN ALL TEST COCKS.
4. TESTING IS REQUIRED BY A WASHINGTON STATE DEPARTMENT OF HEALTH CERTIFIED BACKFLOW ASSEMBLY TESTER UPON INSTALLATION AND ANNUALLY THEREAFTER. ASSEMBLY TO BE MAINTAINED BY OWNER.
5. BRASS FITTINGS.
6. WHERE ACCESS OPENING DOES NOT EXPOSE SHUT OFF VALVES, MIN. 18" CLEARANCE SHALL BE REQUIRED BETWEEN TOP OF VALVE AND UNDERSIDE OF VAULT COVER.

1. COPPER TUBING, TYPE K. *
2. COUPLING, MALE IRON PIPE THREAD BY PACK JOINT (COMPRESSION FITTING) FOR COPPER, MUELLER NO. H-15428 OR EQUAL. *
3. BRASS TEE, MAIN LINE SIZE x 1", FEMALE IRON PIPE THREAD. *
4. BRASS NIPPLE, LENGTH TO FIT, 1", MALE IRON PIPE THREAD. *
5. BRASS NIPPLE, MAIN LINE SIZE, LENGTH TO FIT, MALE IRON PIPE THREAD. *
6. BRASS ELBOW, 1", FEMALE IRON PIPE THREAD. *
7. BRASS UNION, MALE x FEMALE IRON PIPE THREAD. *
8. WASHINGTON STATE APPROVED DOUBLE CHECK VALVE ASSEMBLY. MUST BE INSTALLED IN APPROVED ORIENTATION.
9. CONCRETE VAULT WITH 2 LOCKING ALUMINUM LW HATCH DOORS (PART NO. HHD-36"x72"), RATED FOR H-30 LOADING, WITH SLIP RESISTANT TREATMENT PER SECTION W4-17 OF THE ENGINEERING STANDARDS. COVER TO READ "WATER". SIZE VAULT TO PROVIDE MINIMUM CLEARANCES LISTED IN NOTE 2.
10. DRAIN, SLOPE TO DAYLIGHT OR STORM DRAINAGE SYSTEM (DO NOT CONNECT TO SANITARY SEWER). WIRE MESH RODENT SCREEN OVER DRAIN.
11. VAULT PENETRATION THRUST BLOCK SEE STANDARD DETAIL W-56.

* TYPICAL, EACH SIDE OF D.C.V.A.

City of Bellevue

WATER UTILITY

TITLE

1 1/2" AND 2" DOMESTIC DOUBLE CHECK VALVE ASSEMBLY FOR CONTINUOUS SUPPLY (OUTSIDE INSTALLATION)

NO. W-41

JANUARY 2013

NO SCALE

VAULT MODEL	VAULT COVER * (W/SPECIAL OFFSET)
675–LA	675–TL–2–332P
675–LA	675–TL–2–332P
675–LA	675–TL–2–332P

* COVER MODIFIED PER NOTE (9).

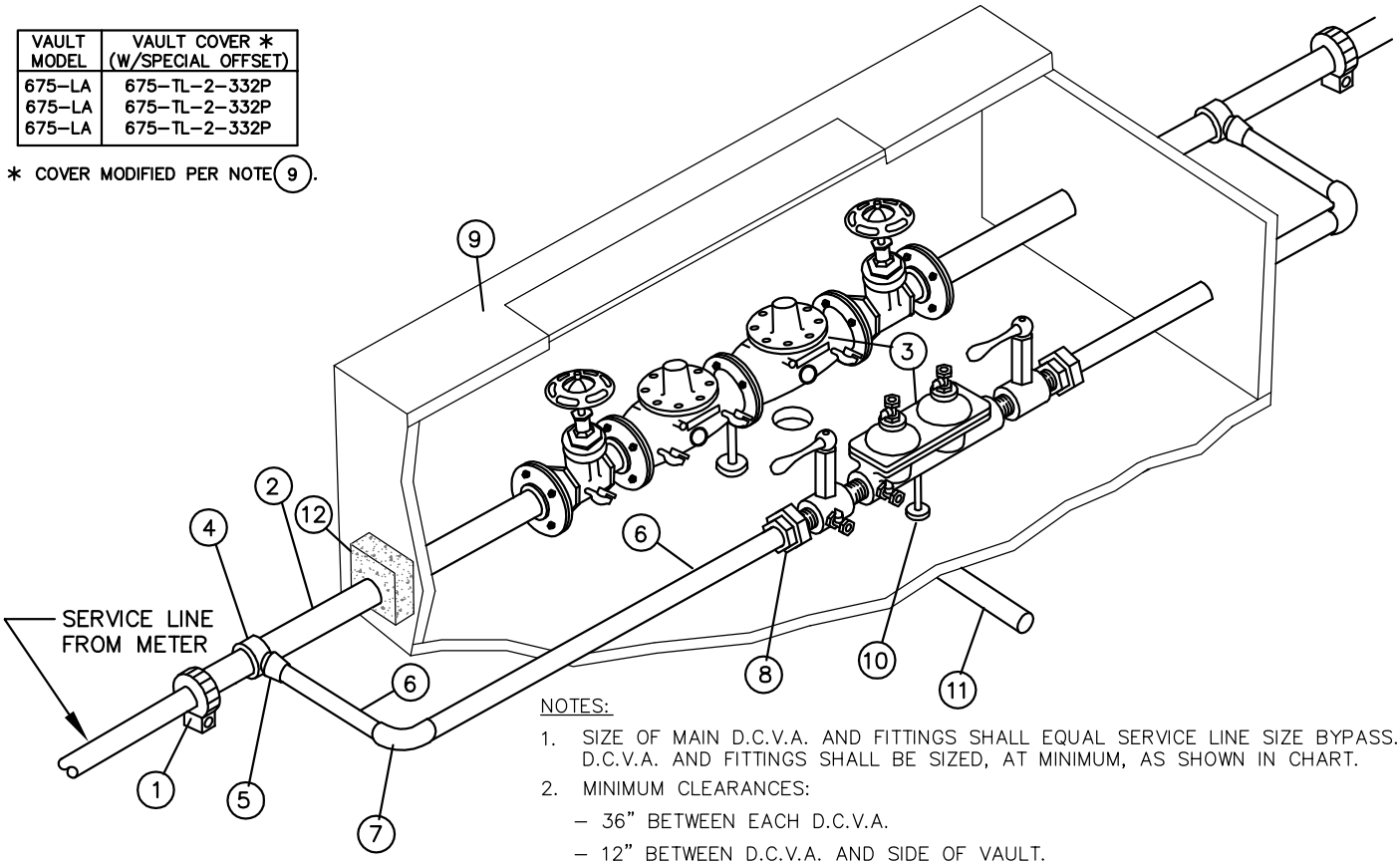

METER SIZE	MAIN–LINE	BY PASS
3"	3"D.I.	1 1/2" COPPER MINIMUM
4"	4"D.I.	1 1/2" COPPER MINIMUM
6"	6"D.I.	2" COPPER MINIMUM

NOTES:

1. SIZE OF MAIN D.C.V.A. AND FITTINGS SHALL EQUAL SERVICE LINE SIZE BYPASS. D.C.V.A. AND FITTINGS SHALL BE SIZED, AT MINIMUM, AS SHOWN IN CHART.
2. MINIMUM CLEARANCES:
   - 36" BETWEEN EACH D.C.V.A.
   - 12" BETWEEN D.C.V.A. AND SIDE OF VAULT.
   - 12" BETWEEN D.C.V.A. AND VAULT FLOOR.
   - 24" SOIL COVER OVER SERVICE LINE.
3. INSTALL PLUGS IN ALL TEST COCKS.
4. TESTING IS REQUIRED BY A WASHINGTON STATE DEPARTMENT OF HEALTH CERTIFIED BACKFLOW ASSEMBLY TESTER UPON INSTALLATION AND ANNUALLY THEREAFTER. ASSEMBLY TO BE MAINTAINED BY OWNER.
5. PROVIDE LADDER AND LADDER–UP PER DETAIL W–19.
6. WHERE ACCESS OPENING DOES NOT EXPOSE SHUT OFF VALVES MIN. 18" CLEARANCE SHALL BE REQUIRED BETWEEN TOP OF VALVE AND UNDERSIDE OF VAULT COVER.
7. MINIMUM 2' OF LEVEL, UNOBSTRUCTED AREA AROUND HATCHES.
8. LOCATE HATCH PER DETAIL W–17.

(1) FLEX COUPLING , ROCKWELL 441 OR EQUAL. *

(2) D.I. PIPE, P.E. X FL., LENGTH TO FIT. *

(3) STATE APPROVED INTERNALLY LOADED DOUBLE CHECK VALVE ASSEMBLY, COMPLETE WITH (2) FULL FLOW BALL VALVE SHUT–OFF VALVES AND TEST COCKS. *

(4) DOUBLE STRAP SERVICE SADDLE, ROMAC 202S WITH IPS TAP, OR EQUAL. *

(5) COUPLING, OUTSIDE IRON PIPE THREAD TO COPPER COMPRESSION CONNECTION, MUELLER H–15428, OR EQUAL. *

(6) COPPER TUBING, TYPE K. *

(7) 1/4 BEND COUPLING, COPPER TO COPPER, MUELLER H–15526, OR EQUAL. *

(8) COUPLING, COPPER COMPRESSION CONNECTION BY FEMALE IRON PIPE THREAD, MUELLER H–15451, OR EQUAL. *

(9) CONCRETE VAULT WITH 2 LOCKING ALUMINUM LW HATCH DOORS (PART NO. HHD–36"x72"), RATED FOR H–30 LOADING, WITH SLIP RESISTANT TREATMENT PER SECTION W4–17 OF THE ENGINEERING STANDARDS. COVER TO READ "WATER". SIZE VAULT TO PROVIDE MINIMUM CLEARANCES LISTED IN NOTE 2.

(10) ADJUSTABLE PIPE STANCHIONS, BOLTED TO FLOOR.

(11) DRAIN, SLOPE TO DAYLIGHT OR STORM DRAINAGE SYSTEM (DO NOT CONNECT TOSANITARY SEWER). WIRE MESH RODENT SCREEN OVER DRAIN.

(12) VAULT PENETRATION THRUST BLOCK SEE STANDARD DETAIL W–56.

* TYPICAL, EACH SIDE OF D.C.V.A.

JANUARY 2013 NO SCALE

City of Bellevue

WATER UTILITY

TITLE 3" TO 6" DOMESTIC DOUBLE CHECK VALVE ASSEMBLY FOR CONTINUOUS SUPPLY (OUTSIDE INSTALLATION)

NO. W–42

METER SIZE	MAINLINE	BY PASS	VAULT MODEL	VAULT COVER * (W/SPECIAL OFFSET)
8"	8" D.I.	MIN 4" D.I.	810-LA	810-TL-2-332P
10"	10" D.I.	MIN 4" D.I.	810-LA	810-TL-2-332P

* COVER MODIFIED PER NOTE (7).

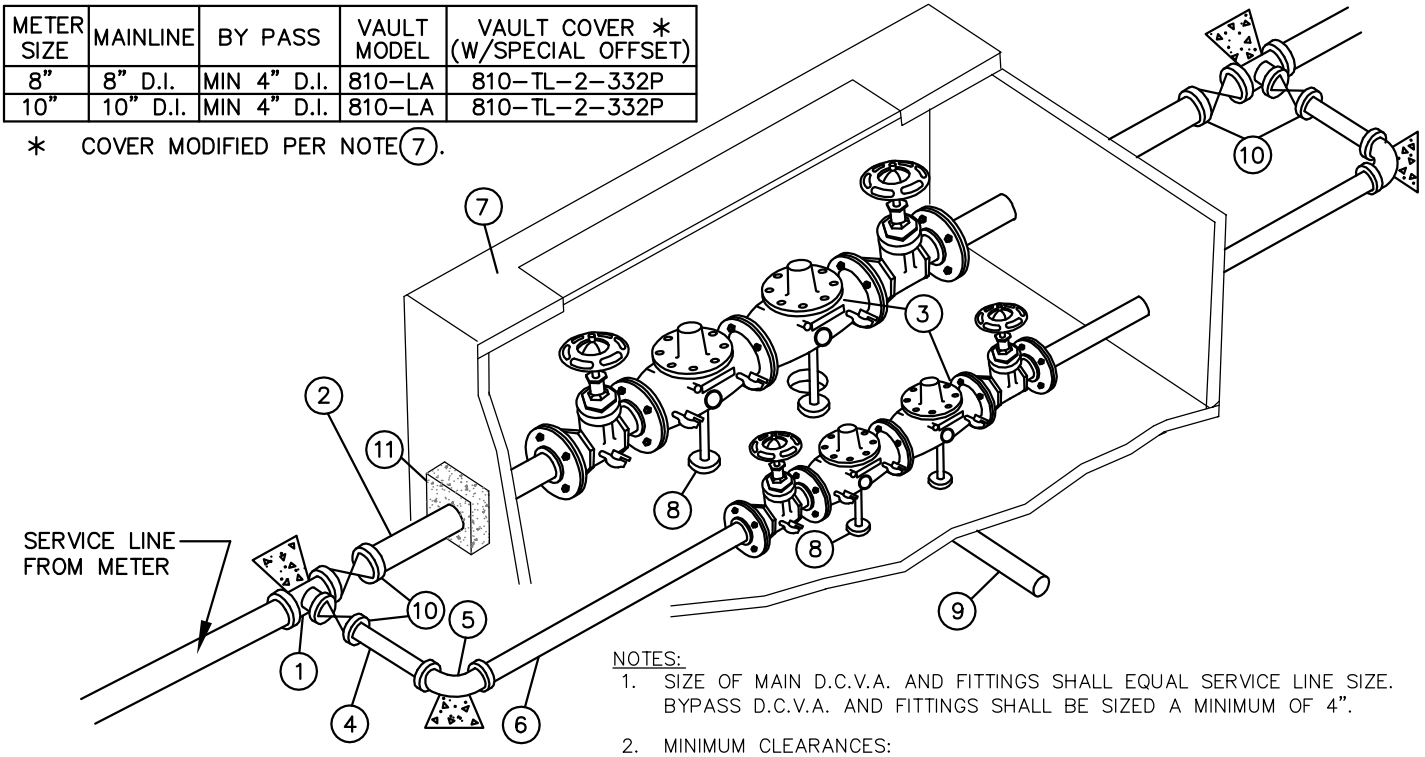

NOTES:

1. SIZE OF MAIN D.C.V.A. AND FITTINGS SHALL EQUAL SERVICE LINE SIZE. BYPASS D.C.V.A. AND FITTINGS SHALL BE SIZED A MINIMUM OF 4".
2. MINIMUM CLEARANCES:
   - 36" BETWEEN EACH D.C.V.A.
   - 12" BETWEEN D.C.V.A. AND SIDE OF VAULT.
   - 12" BETWEEN D.C.V.A. AND VAULT FLOOR.
   - 24" SOIL COVER OVER SERVICE LINE.
3. INSTALL PLUGS IN ALL TEST COCKS.
4. TESTING IS REQUIRED BY A WASHINGTON STATE DEPARTMENT OF HEALTH CERTIFIED BACKFLOW ASSEMBLY TESTER UPON INSTALLATION AND ANNUALLY THEREAFTER. ASSEMBLY TO BE MAINTAINED BY OWNER.
5. PROVIDE LADDER AND LADDER-UP PER DETAIL W-19.
6. WHERE ACCESS OPENING DOES NOT EXPOSE SHUT OFF VALVES MIN. 24" CLEARANCE SHALL BE REQUIRED BETWEEN TOP OF VALVE AND UNDERSIDE OF VAULT COVER.
7. ALL FITTINGS OUTSIDE VAULT SHALL INCLUDE THRUST BLOCKING AND JOINT RESTRAINT DEVICES.
8. MINIMUM 2' OF LEVEL, UNOBSTRUCTED AREA AROUND HATCHES.
9. LOCATE HATCH PER DETAIL W-17.

(1) TEE, MJ, MAINLINE SIZE BY 4" MINIMUM BRANCH. *

(2) D.I. PIPE, P.E. X FL., LENGTH TO FIT. *

(3) STATE APPROVED INTERNALLY LOADED DOUBLE CHECK VALVE ASSEMBLY, COMPLETE WITH (2) FULL FLOW BALL VALVE SHUT-OFF VALVES AND TEST COCKS.

(4) 4" MINIMUM DI PIPE, PE x PE, LENGTH TO FIT. *

(5) 4" MINIMUM 90° BEND, MJ. *

(6) 4" MINIMUM DI PIPE, PE x FL, LENGTH TO FIT. *

(7) CONCRETE VAULT WITH 2 LOCKING ALUMINUM LW HATCH DOORS (PART NO. HHD-36"x72"), RATED FOR H-30 LOADING, WITH SLIP RESISTANT TREATMENT PER SECTION W4-17 OF THE ENGINEERING STANDARDS. COVER TO READ "WATER". SIZE VAULT TO PROVIDE MINIMUM CLEARANCES LISTED IN NOTE 2.

(8) ADJUSTABLE PIPE STANCHIONS, BOLTED TO FLOOR.

(9) DRAIN, SLOPE TO DAYLIGHT OR STORM DRAINAGE SYSTEM (DO NOT CONNECT TO SANITARY SEWER). WIRE MESH RODENT SCREEN OVER DRAIN.

(10) GATE VALVE, F.L.xM.J. (WITH VALVE BOX AND COVER).

(11) VAULT PENETRATION THRUST BLOCK SEE STANDARD DETAIL W-56 FOR BOTH MAINLINE AND BYPASS.

* TYPICAL, EACH SIDE OF D.C.V.A.

JANUARY 2013 NO SCALE

City of Bellevue

WATER UTILITY

TITLE 8" AND 10" DOMESTIC DOUBLE CHECK VALVE ASSEMBLY FOR CONTINUOUS SUPPLY (OUTSIDE INSTALLATION)

NO. W-43

PLAN

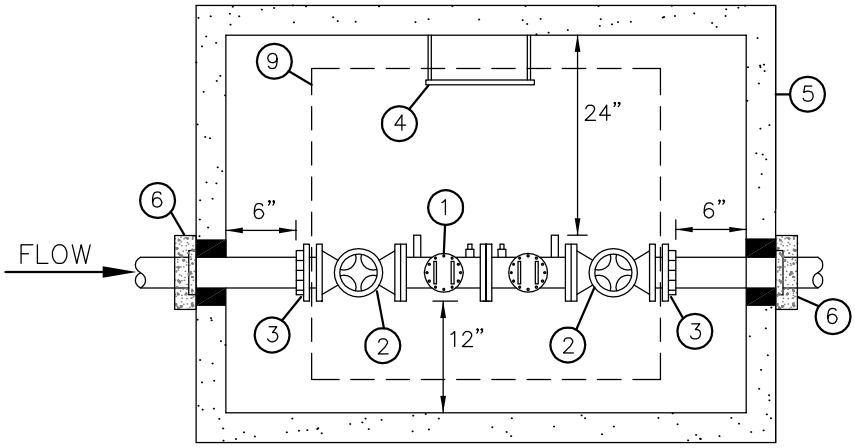

ELEVATION

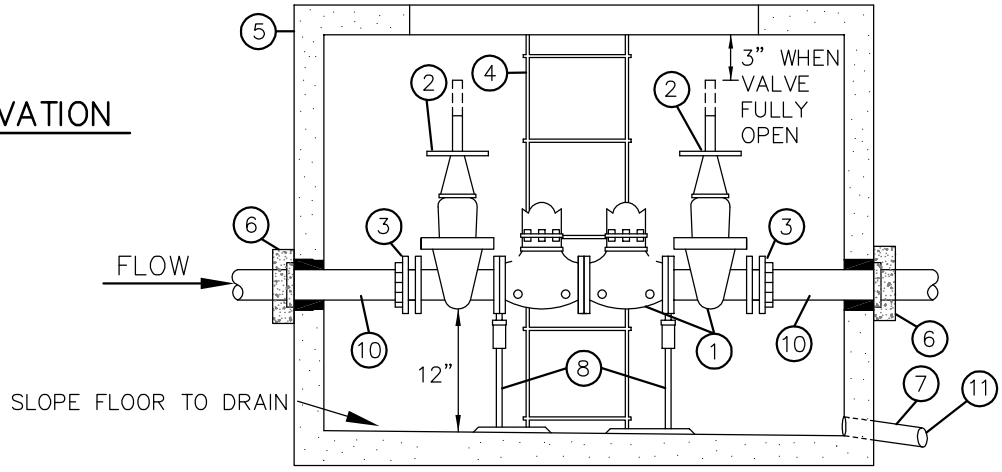

1. STATE APPROVED DOUBLE CHECK VALVE ASSEMBLY, COMPLETE WITH (2) RESILIENT SEATED O.S.&Y. VALVES AND (4) RESILIENT SEATED TEST COCKS.
2. EACH VALVE SHALL BE MARKED WITH MODEL NUMBER WITH DESIGNATION OF RESILIENT SEAT: SUCH AS "RS" OR "R", WHICH MUST BE CAST, MOLDED, OR AFFIXED ONTO THE BODY OR BONNET OF THE VALVE. ALL FERROUS BODIED VALVES SHALL BE COATED WITH A MINIMUM OF 4MLS. OF EPOXY OR EQUIVALENT POLYMERIZED COATING.
3. MEGAFLANGE
4. ONE GALVANIZED STEEL LADDER TO BE SECURED TO VAULT WITH LADDER-UP (BILCO MODEL LU-2). LADDER TO BE ATTACHED TO VAULT PER STANDARD DETAIL W-19.
5. CONCRETE VAULT WITH 2 LOCKING ALUMINUM LW HATCH DOORS (PART NO. HHD-36"x72"), RATED FOR H-30 LOADING WITH SLIP RESISTANT TREATMENT PER SECTION W4-17 OF THE ENGINEERING STANDARDS. COVER TO READ "WATER". VAULT SHALL BE EQUAL TO UTILITY VAULT CO. MODEL LISTED IN TABLE BELOW.
6. WATER TIGHT GROUT. RESTRAIN INLET/OUTLET PIPE WITH MEGALUG MID-SPAN RESTRAINT AND THRUST BLOCK ADJACENT TO VAULT SEE STANDARD DETAIL W-56.
7. DRAIN, SLOPE TO DAYLIGHT OR STORM DRAINAGE SYSTEM, MINIMUM DIAMETER 6".
8. TWO ADJUSTABLE PIPE STANCHIONS, BOLTED TO FLOOR.
9. ACCESS TO BE CENTERED OVER ASSEMBLY.
10. CL. 52 D.I., PExFL WITH RETAINER GLANDS.
11. INSTALL WIRE MESH RODENT SCREEN OVER DRAIN OUTLET.

SIZE	MIN. VAULT SIZE (INSIDE) W	L	H	UTIL. VAULT CO. MODEL	UTIL. VAULT CO. COVER *
3"	3'-8"	4'-8"	3'-3"	644-LA	64-2-332P
4"	3'-10"	5'-3"	3'-8"	575-LA	57TL-2-332P
6"	4'-0"	6'-6"	4'-5"	577-LA	57TL-20332P
8"	4'-5"	7'-8"	5'-3"	4484-LA	4484-TL2-332P
10"	4'-8"	8'-8"	6'-1"	5106-LA	5106-TL3-332

* COVER MODIFIED PER NOTE (5).

NOTES:

1. TESTING IS REQUIRED BY A WASHINGTON STATE DEPARTMENT OF HEALTH CERTIFIED BACKFLOW ASSEMBLY TESTER UPON INSTALLATION AND ANNUALLY THEREAFTER. ASSEMBLY TO BE MAINTAINED BY OWNER.
2. TEE AND GATE VALVES REQUIRED ON MAIN.
3. ALL CLEARANCES SHOWN ARE MINIMUM.
4. VAULTS SHALL NOT BE INSTALLED IN AREAS WITH VEHICULAR TRAFFIC.
5. IN CENTRAL BUSINESS DISTRICT, 3" THROUGH 6" ASSEMBLIES SHALL CONNECT TO WATER MAIN WITH 8" PIPE.
6. MINIMUM 2' OF LEVEL, UNOBSTRUCTED AREA AROUND HATCHES.

JANUARY 2013 NO SCALE

City of Bellevue

WATER UTILITY

TITLE

3" TO 10" DOUBLE CHECK VALVE ASSEMBLY FOR DOMESTIC AND IRRIGATION SERVICES (OUTSIDE INSTALLATION)

NO. W-44

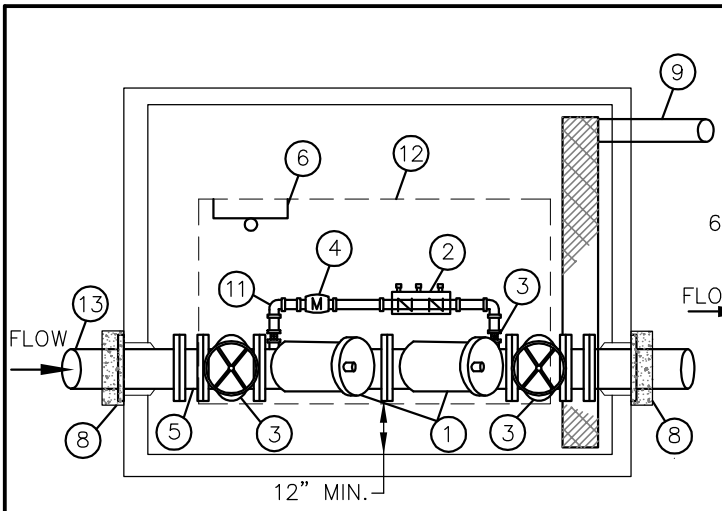

PLAN

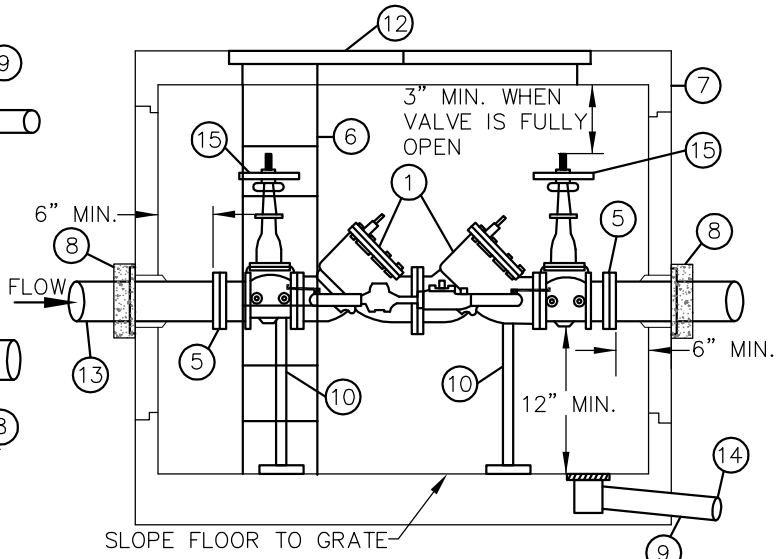

ELEVATION

1. STATE APPROVED DOUBLE CHECK VALVE ASSEMBLY, COMPLETE WITH (2) RESILIENT SEATED O.S.&Y. VALVES AND (4) RESILIENT SEATED TEST COCKS, AND BRASS OR COPPER DETECTOR BY-PASS. FACE TEST COCKS TOWARD CENTER OF VAULT AND ACCESSIBLE.
2. STATE APPROVED 3/4" DOUBLE CHECK VALVE ASSEMBLY, COMPLETE WITH (2) RESILIENT SEATED BALL VALVES AND (4) RESILIENT SEATED TEST COCKS. FACE TEST COCKS TOWARD CENTER OF VAULT.
3. EACH VALVE SHALL BE MARKED WITH MODEL NUMBER WITH DESIGNATION OF RESILIENT SEAT: SUCH AS "RS" OR "R", WHICH MUST BE CAST, MOLDED, OR AFFIXED ONTO THE BODY OR BONNET OF THE VALVE. ALL FERROUS BODIED VALVES SHALL BE COATED WITH A MINIMUM OF 4MLS. OF EPOXY OR EQUIVALENT POLYMERIZED COATING.
4. 3/4" METER (CUBIC FEET READING)
5. MEGAFLANGE
6. ONE GALVANIZED STEEL LADDER TO BE SECURED TO VAULT WITH LADDER-UP (BILCO MODEL LU-2). LADDER TO BE ATTACHED TO VAULT PER STANDARD DETAIL W-19.
7. CONCRETE VAULT WITH 2 LOCKING ALUMINUM LW HATCH DOORS (PART NO. HHD-42"x72"), RATED FOR H-30 LOADING, OFFSET WITH SLIP RESISTANT TREATMENT PER SECTION W4-17 OF THE ENGINEERING STANDARDS. COVER TO READ "WATER". VAULT SHALL BE EQUAL TO UTILITY VAULT CO. MODEL LISTED IN THE TABLE BELOW.
8. WATER TIGHT GROUT. RESTRAIN INLET/OUTLET PIPE WITH MEGALUG MID-SPAN RESTRAINT AND THRUST BLOCK ADJACENT TO VAULT SEE STANDARD DETAIL W-56.
9. DRAIN, SLOPE TO DAYLIGHT OR STORM DRAINAGE SYSTEM, MINIMUM DIAMETER 6".
10. TWO ADJUSTABLE PIPE STANCHIONS, BOLTED TO FLOOR.
11. ALL PLUMBING FOR BY-PASS TO BE COPPER AND BRASS.
12. ACCESS TO BE CENTERED OVER ASSEMBLY.
13. CL. 52 D.I., PExFL WITH RETAINER GLANDS.
14. INSTALL WIRE MESH RODENT SCREEN OVER DRAIN OUTLET.
15. 2 VALVE SUPERVISORY SWITCHES, SPDT, PER FIRE DEPARTMENT REQUIREMENTS (1 SWITCH PER VALVE).

NOTES:

1. TESTING IS REQUIRED BY A WASHINGTON STATE DEPARTMENT OF HEALTH CERTIFIED BACKFLOW ASSEMBLY TESTER UPON INSTALLATION AND ANNUALLY THEREAFTER. ASSEMBLY TO BE MAINTAINED BY OWNER.
2. TEE & GATE VALVES REQUIRED ON MAIN.
3. WHEN DOUBLE CHECK VALVE ASSEMBLY IS USED IN SAME LINE WITH DOMESTIC BUILDING METER, METERED DETECTOR BYPASS SHALL BE OMITTED.
4. ALL CLEARANCES SHOWN ARE MINIMUM.
5. VAULTS SHALL NOT BE INSTALLED IN AREAS WITH VEHICULAR TRAFFIC.
6. IN CENTRAL BUSINESS DISTRICT, 3" THROUGH 6" ASSEMBLIES SHALL CONNECT TO WATER MAIN WITH 8" PIPE.
7. FDC TO BE LOCATED DOWNSTREAM OF DCVA. FDC LINE & CHECK VALVE MAY BE ROUTED INSIDE THE DCVA VAULT PROVIDED ALL PROVISIONS IN STANDARD DETAIL W-48 ARE MET.
8. MINIMUM 2' OF LEVEL, UNOBSTRUCTED AREA AROUND HATCHES.
9. SECURE A VALVE MARKER, PER DETAIL W-55, TO EACH GATE VALVE HANDLE.
10. LONGER VALVE ASSEMBLIES MAY REQUIRE A LARGER VAULT TO MEET THE REQUIRED CLEARANCES. SUBMIT FOR APPROVAL.

SIZE	MIN. VAULT SIZE (INSIDE) W	L	H	UTIL. VAULT CO. MODEL	UTIL. VAULT CO. COVER *
3"	4'-2"	4'-8"	3'-3"	675-WA	675-2-332P
4"	4'-6"	5'-3"	3'-8"	675-WA	675-2-332P
6"	4'-8"	6'-6"	4'-5"	675-WA	675-2-332P
8"	5'-0"	7'-8"	5'-3"	687-LA	687-TL-2-332
10"	5'-2"	8'-8"	6'-1"	5106-LA	5106-TL3-332

* COVER MODIFIED PER NOTE 7.

City of Bellevue

WATER UTILITY

TITLE

3" TO 10" DOUBLE CHECK DETECTOR ASSEMBLY FOR FIRE SPRINKLER SYSTEMS (OUTSIDE INSTALLATION)

NO. W-45

JANUARY 2013

NO SCALE

NOTICE: OUTSIDE-INSTALLED RPBA IS NOT ALLOWED IN BURIED VAULTS. DEVELOPER SHALL PROVIDE UTILITIES WITH A DESIGN FOR AN ABOVE-GROUND ENCLOSURE THAT DRAINS TO DAY LIGHT FOR APPROVAL. CLEARANCES SHOWN BELOW SHALL APPLY TO THE ENCLOSURE.

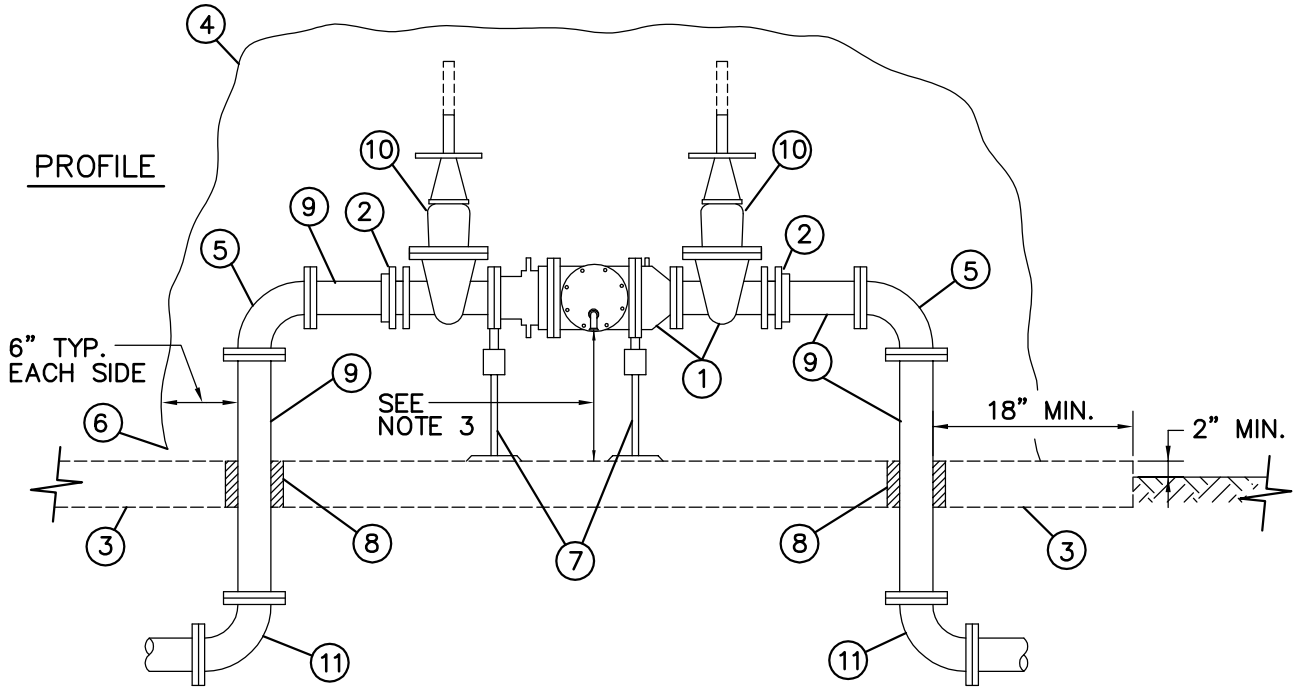

1. STATE APPROVED REDUCED PRESSURE BACKFLOW ASSEMBLY, COMPLETE WITH (2) RESILIENT SEATED O.S.&Y. GATE VALVES (2" AND SMALLER: FULL FLOW RESILIENT SEATED BALL VALVES) AND (4) RESILIENT SEATED TEST COCKS.
2. MEGAFLANGE. (2" AND SMALLER: BRASS UNION, M.I.P.T.xF.I.P.T.).
3. 4" CONC. (2,000 PSI) SLAB EXTENDED 6" BEYOND ENCLOSURE (ALL DIRECTIONS). REINFORCED W/ 6x6 W2.9xW2.9 WWF.
4. APPROVED ENCLOSURE. CONTRACTOR TO VERIFY REQUIRED SIZE.
5. 90° BEND, FL (2" AND SMALLER: BRASS, F.I. P.T.).
6. ENCLOSURE DRAIN, SIZED IN ACCORDNCE WITH PNWS-AWWA CROSS CONNECTION CONTROL MANUAL (7TH ADDITION) FIGURE 6-1.
7. TWO ADJUSTABLE PIPE STANCHIONS, BOLTED TO SLAB.
8. PVC SLEEVE THROUGH SLAB.
9. CL. 52 D.I., PExFL (2" AND SMALLER: BRASS NIPLE, M.I.P.T.)
10. EACH VALVE SHALL BE MARKED WITH MODEL NUMBER WITH DESIGNATION OF RESILIENT SEAT: SUCH AS "RS" OR "R", WHICH MUST BE CAST, MOLDED, OR AFFIXED ONTO THE BODY OR BONNET OF THE VALVE. ALL FERROUS BODIED VALVES SHALL BE COATED WITH A MINIMUM OF 4MLS. OF EPOXY OR EQUIVALENT POLYMERIZED COATING.
11. 90° BEND, RESTRAINED JOINT (2" AND SMALLER: BRASS, COMPRESSION x F.I.P.T.).

NOTES:
1. PROVIDE ELECTRICAL HEAT TAPE FREEZE PROTECTION.
2. WHEN THE REDUCED PRESSURE ASSEMBLY IS LOCATED INSIDE A BUILDING A SIZED DRAIN LINE SHALL BE PROVIDED FOR RELIEF PORT. THERE MUST BE AN APPROVED AIR GAP BETWEEN THE RELIEF PORT AND DRAIN.
3. ALLOW 12"+ NOMINAL DIAMETER OF ASSEMBLY CLEARANCE BELOW RELIEF PORT FOR REPAIR. ALSO PROVIDE 12" MIN. AIR GAP CLEARANCE FROM TOP OF DRAIN PIPE.
4. REDUCED PRESSURE BACKFLOW ASSEMBLY WILL BE ALLOWED TO BE INSTALLED IN VAULTS ONLY IN CASES WHERE NO OTHER MEANS OF INSTALLATION IS AVAILABLE AND AS APPROVED BY A CITY OF BELLEVUE WATER QUALITY TECHNICIAN.
5. TESTING IS REQUIRED BY A WASHINGTON STATE DEPARTMENT OF HEALTH CERTIFIED BACKFLOW ASSEMBLY TESTER UPON INSTALLATION AND ANNUALLY THEREAFTER. ASSEMBLY TO BE MAINTAINED BY OWNER.
6. ALL CLEARANCES SHOWN ARE MINIMUM.
7. ENCLOSURES SHALL NOT BE INSTALLED IN AREAS WITH VEHICULAR TRAFFIC.
8. TEE AND GATE VALVES REQUIRED ON MAIN.
9. IN CENTRAL BUSINESS DISTRICT, 3" THROUGH 6" ASSEMBLIES SHALL CONNECT TO WATER MAIN WITH 8" PIPE.
10. MINIMUM 2' OF LEVEL, UNOBSTRUCTED AREA AROUND ENCLOSURES.
11. RPBA INSTALLATIONS THAT DIFFER FROM THE STANDARD DETAIL MUST BE APPROVED BY THE CROSS CONNECTION PROGRAM ADMINISTRATOR (425-452-5208) AND WILL BE REVIEWED ON A CASE-BY-CASE BASIS TO ENSURE THEY MEET CURRENT MINIMUM REQUIREMENTS FOR INSTALLATION AND FREEZE PROTECTION.

City of Bellevue

WATER UTILITY

TITLE

REDUCED PRESSURE BACKFLOW ASSEMBLY FOR DOMESTIC AND IRRIGATION SERVICE (OUTSIDE INSTALLATION)

NO. W-46A

JANUARY 2013

NO SCALE

NOTICE: OUTSIDE–INSTALLED RPBA IS NOT ALLOWED IN BURIED VAULTS. DEVELOPER SHALL PROVIDE UTILITIES WITH A DESIGN FOR AN ABOVE–GROUND ENCLOSURE THAT DRAINS TO DAY LIGHT FOR APPROVAL. THE BURIED VAULT DETAIL SHOWN BELOW IS ONLY ALLOWED WHEN GIVEN SPECIAL APPROVAL BY THE CITY.

PROFILE

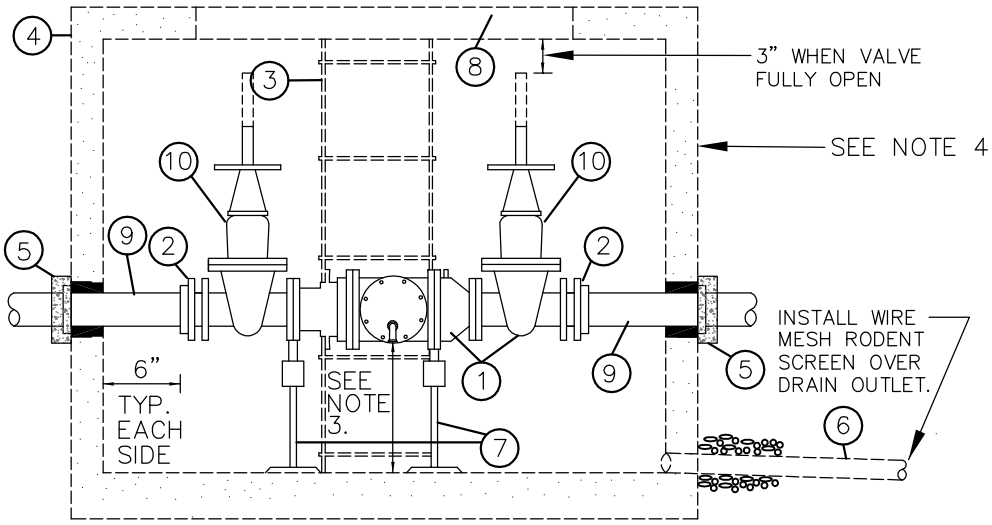

1. STATE APPROVED REDUCED PRESSURE BACKFLOW ASSEMBLY, COMPLETE WITH (2) RESILIENT SEATED O.S.&Y. GATE VALVES AND (4) RESILIENT SEATED TEST COCKS. FACE TEST COCKS TOWARD CENTER OF VAULT AND ACCESSABLE.
2. MEGAFLANGE
3. ONE GALVANIZED STEEL LADDER TO BE SECURED TO VAULT WITH LADDER–UP (BILCO MODEL LU–2). LADDER TO BE ATTACHED TO VAULT PER STANDARD DETAIL W–19.
4. CONCRETE VAULT WITH 2 LOCKING ALUMINUM LW HATCH DOORS (PART NO. HHD–36"x72") RATED FOR H–30 LOADING WITH SLIP RESISTANT TREATMENT PER SECTION W4–17 OF THE ENGINEERING STANDARDS. COVER TO READ "WATER". VAULT SHALL BE EQUAL TO UTILITY VAULT CO. MODEL LISTED IN THE TABLE BELOW.
5. WATER TIGHT GROUT. RESTRAIN INLET/OUTLET PIPE WITH MEGALUG MID–SPAN RESTRAINT AND THRUST BLOCK ADJACENT TO VAULT SEE STANDARD DETAIL W–56.
6. DRAIN, SLOPE TO DAYLIGHT WITH BORE SIGHTED DAYLIGHT DRAIN CLEARLY VISIBLE END TO END WITH STRAIGHT PIPE, SIZED TO MEET FLOW REQUIREMENTS OF RPBA RELIEF VENT.
7. TWO ADJUSTABLE PIPE STANCHIONS, BOLTED TO FLOOR.
8. ACCESS TO BE CENTERED OVER ASSEMBLY.
9. CL. 52 D.I., PExFL WITH RETAINER GLANDS.
10. EACH VALVE SHALL BE MARKED WITH MODEL NUMBER WITH DESIGNATION OF RESILIENT SEAT: SUCH AS "RS" OR "R", WHICH MUST BE CAST, MOLDED, OR AFFIXED ONTO THE BODY OR BONNET OF THE VALVE. ALL FERROUS BODIED VALVES SHALL BE COATED WITH A MINIMUM OF 4MLS. OF EPOXY OR EQUIVALENT POLYMERIZED COATING.

SIZE	MIN. VAULT SIZE (INSIDE) W	L	H	UTIL. VAULT CO. MODEL	UTIL. VAULT CO. COVER *
3"	4'–3"	4'–8"	3'–11"	575–LA	64–2–332P
4"	4'–3"	5'–3"	4'–7"	577–LA	57TL–2–332P
6"	4'–4"	6'–6"	5'–5"	4484–LA	4484–TL2–332P
8"	5'–2"	7'–7"	7'–1"	687–LA	687–TL–2–332
10"	5'–4"	8'–8"	8'–0"	5106–2X	5106–TL3–332

* COVER MODIFIED PER NOTE 4.

NOTES:
1. DAYLIGHT DRAIN MUST BE ABLE TO BE LINE SIGHTED, INSTALLED ABOVE MAXIMUM FLOOD LEVEL, AND BE ABLE TO HANDLE THE VOLUME OF WATER THAT CAN BE DISCHARGED FROM THE RELIEF VALVE PORT.
2. WHEN THE REDUCED PRESSURE ASSEMBLY IS LOCATED INSIDE A BUILDING A SIZED DRAIN LINE SHALL BE PROVIDED FOR RELIEF PORT. THERE MUST BE AN APPROVED AIR GAP BETWEEN THE RELIEF PORT AND DRAIN.
3. ALLOW 12"+ NOMINAL DIAMETER OF ASSEMBLY CLEARANCE BELOW RELIEF PORT FOR REPAIR. ALSO PROVIDE 12" MIN. AIR GAP CLEARANCE FROM TOP OF DRAIN PIPE.
4. REDUCED PRESSURE BACKFLOW ASSEMBLY WILL BE ALLOWED TO BE INSTALLED IN VAULTS ONLY IN CASES WHERE NO OTHER MEANS OF INSTALLATION IS AVAILABLE AND AS APPROVED BY A CITY OF BELLEVUE WATER QUALITY TECHNICIAN.
5. TESTING IS REQUIRED BY A WASHINGTON STATE DEPARTMENT OF HEALTH CERTIFIED BACKFLOW ASSEMBLY TESTER UPON INSTALLATION AND ANNUALLY THEREAFTER. ASSEMBLY TO BE MAINTAINED BY OWNER.
6. MINIMUM CLEARANCE BETWEEN ASSEMBLY AND WALL ON LADDER SIDE OF VAULT IS 24". MINIMUM CLEARANCE FROM OPPOSITE WALL IS 12". ALL CLEARANCES SHOWN ARE MINIMUM.
7. VAULTS SHALL NOT BE INSTALLED IN AREAS WITH VEHICULAR TRAFFIC.
8. TEE AND GATE VALVES REQUIRED ON MAIN.
9. IN CENTRAL BUSINESS DISTRICT, 3" THROUGH 6" ASSEMBLIES SHALL CONNECT TO WATER MAIN WITH 8" PIPE.
10. MINIMUM 2' OF LEVEL, UNOBSTRUCTED AREA AROUND HATCHES.
11. RPBA INSTALLATIONS THAT DIFFER FROM THE STANDARD DETAIL MUST BE APPROVED BY THE CROSS CONNECTION PROGRAM ADMINISTRATOR (425–452–5208) AND WILL BE REVIEWED ON A CASE–BY–CASE BASIS TO ENSURE THEY MEET CURRENT MINIMUM REQUIREMENTS FOR INSTALLATION AND FREEZE PROTECTION.

City of Bellevue

WATER UTILITY

TITLE

3" TO 10" REDUCED PRESSURE BACKFLOW ASSEMBLY FOR DOMESTIC AND IRRIGATION SERVICE (BURIED VAULT INSTALLATION) NO. W–46B

JANUARY 2013

NO SCALE

NOTICE: OUTSIDE-INSTALLED RPBA IS NOT ALLOWED IN BURIED VAULTS. DEVELOPER SHALL PROVIDE UTILITIES WITH A DESIGN FOR AN ABOVE-GROUND ENCLOSURE THAT DRAINS TO DAY LIGHT FOR APPROVAL. CLEARANCES SHOWN BELOW SHALL APPLY TO THE ENCLOSURE. THE BURIED VAULT DETAIL SHOWN BELOW IS ONLY ALLOWED WHEN GIVEN SPECIAL APPROVAL BY THE CITY.

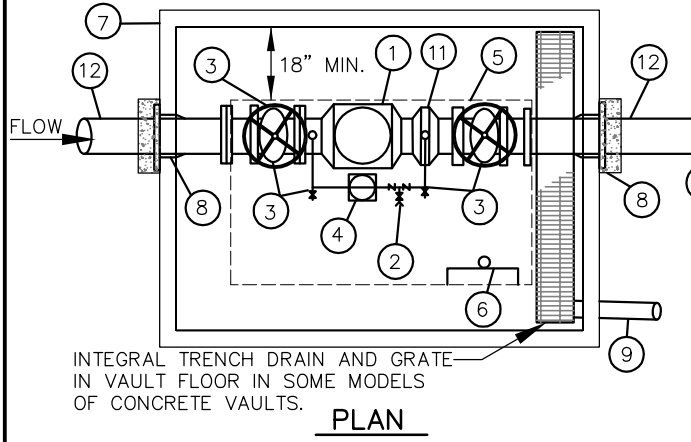

PLAN

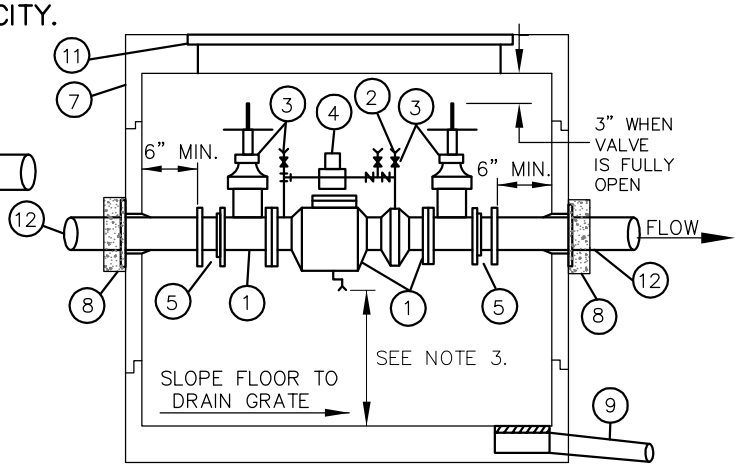

ELEVATION

1. STATE APPROVED REDUCED PRESSURE BACKFLOW ASSEMBLY, COMPLETE WITH (2) RESILIENT SEATED O.S.&Y. GATE VALVES AND (4) RESILIENT SEATED TEST COCKS, AND BRASS OR COPPER DETECTOR BY-PASS, CENTERED IN VAULT.
2. STATE APPROVED 3/4" REDUCED PRESSURE ASSEMBLY ON BY-PASS, COMPLETE WITH (2) RESILIENT SEATED BALL VALVES AND (4) RESILIENT SEATED TEST COCKS.
3. EACH VALVE SHALL BE MARKED WITH MODEL NUMBER WITH DESIGNATION OF RESILIENT SEAT: SUCH AS "RS OR "R", WHICH MUST BE CAST, MOLDED, OR AFFIXED ONTO THE BODY OR BONNET OF THE VALVE. ALL FERROUS BODIED VALVES SHALL BE COATED WITH A MIN. OF 4mils d.f.t. EPOXY OR EQUIVALENT POLYMERIZED COATING.
4. 3/4" METER (CUBIC FEET READING) AS REQUIRED.
5. MEGAFLANGE
6. ONE GALVANIZED STEEL LADDER TO BE SECURED TO VAULT WITH LADDER-UP (BILCO MODEL LU-2). LADDER TO BE ATTACHED TO VAULT PER STANDARD DETAIL W-19.
7. CONCRETE VAULT WITH 2 LOCKING ALUMINUM LW HATCH DOORS (PART NO. HHD-42"x72") RATED FOR H-30 LOADING WITH SLIP RESISTANT TREATMENT PER SECTION W4-17 OF THE ENGINEERING STANDARDS. COVER TO READ "WATER". VAULT SHALL BE EQUAL TO UTILITY VAULT CO. MODEL LISTED IN TABLE BELOW.
8. WATER TIGHT GROUT. RESTRAIN INLET/OUTLET PIPE WITH MEGALUG MID-SPAN RESTRAINT AND THRUST BLOCK ADJACENT TO VAULT SEE STANDARD DETAIL W-56.
9. DRAIN, SLOPE TO DAYLIGHT WITH BORE SIGHTED DAYLIGHT DRAIN CLEARLY VISIBLE END TO END WITH STRAIGHT PIPE, SIZED TO MEET FLOW REQUIREMENTS OF RPBA RELIEF VENT. INSTALL WIRE MESH RODENT SCREEN OVER DRAIN OUTLET.
10. TWO ADJUSTABLE PIPE STANCHIONS, BOLTED TO FLOOR.
11. ACCESS TO BE CENTERED OVER ASSEMBLY.
12. CL. 52 D.I., PExFL WITH RETAINER GLANDS.
13. VALVE SUPERVISORY SWITCH, SPDT, PER FIRE DEPARTMENT REQUIREMENTS.

SIZE	MIN. VAULT SIZE (INSIDE) W	L	H	UTIL. VAULT CO. MODEL	UTIL. VAULT CO. COVER *
3"	4'-9"	4'-8"	3'-11"	675-WA	675-2-332P
4"	5'-0"	5'-3"	4'-7"	675-WA	675-2-332P
6"	5'-1"	6'-6"	5'-5"	676-WA	676-2-332P
8"	5'-9"	7'-7"	7'-1"	687-LA	687-TL-2-332
10"	5'-10"	8'-8"	8'-0"	612-2X	612-3-332P

* COVER MODIFIED PER NOTE 7.

NOTES:

1. DAYLIGHT DRAIN MUST BE ABLE TO BE LINE SIGHTED, INSTALLED ABOVE MAXIMUM FLOOD LEVEL, AND BE ABLE TO HANDLE THE VOLUME OF WATER THAT CAN BE DISCHARGED FROM THE RELIEF VALVE PORT.
2. WHEN THE REDUCED PRESSURE ASSEMBLY IS LOCATED INSIDE A BUILDING A SIZED DRAIN LINE SHALL BE PROVIDED FOR RELIEF PORT. THERE MUST BE AN APPROVED AIR GAP BETWEEN THE RELIEF PORT AND DRAIN.
3. ALLOW 12"+ NOMINAL DIAMETER OF ASSEMBLY CLEARANCE BELOW RELIEF PORT FOR REPAIR. ALSO PROVIDE 12MIN. AIR GAP CLEARANCE FROM TOP OF DRAIN PIPE.
4. REDUCED PRESSURE BACKFLOW ASSEMBLY WILL BE ALLOWED TO BE INSTALLED IN VAULTS ONLY IN CASES WHERE NO OTHER MEANS OF INSTALLATION IS AVAILABLE AND AS APPROVED BY A CITY OF BELLEVUE WATER QUALITY TECHNICIAN.
5. TESTING IS REQUIRED BY A WASHINGTON STATE DEPARTMENT OF HEALTH CERTIFIED BACKFLOW ASSEMBLY TESTER UPON INSTALLATION AND ANNUALLY THEREAFTER. ASSEMBLY TO BE MAINTAINED BY OWNER.
6. MINIMUM CLEARANCE BETWEEN ASSEMBLY AND WALL ON LADDER SIDE OF VAULT IS 24". MINIMUM CLEARANCE FROM OPPOSITE WALL 12". ALL CLEARANCES SHOWN ARE MINIMUM.
7. VAULTS SHALL NOT BE INSTALLED IN AREAS WITH VEHICULAR TRAFFIC.
8. TEE AND GATE VALVES REQUIRED ON MAIN.
9. IN CENTRAL BUSINESS DISTRICT, 3" THROUGH 6" ASSEMBLIES SHALL CONNECT TO WATER MAIN WITH 8" PIPE.
10. FDC TO BE LOCATED DOWNSTREAM OF RPBA. FDC LINE AND CHECK VALVE MAY BE ROUTED INSIDE THE RPBA VAULT PROVIDED ALL PROVISIONS OF STANDARD DETAIL W-48 ARE MET.
11. MINIMUM 2' OF LEVEL, UNOBSTRUCTED AREA AROUND HATCHES.
12. SECURE A VALVE MARKER, PER DETAIL W-55, TO EACH GATE VALVE HANDLE.
13. LONGER VALVE ASSEMBLIES MAY REQUIRE A LARGER VAULT TO MEET THE REQUIRED CLEARANCES. SUBMIT FOR APPROVAL.
14. RPBA INSTALLATIONS THAT DIFFER FROM THE STANDARD DETAIL MUST BE APPROVED BY THE CROSS CONNECTION PROGRAM ADMINISTRATOR (425-452-5208) AND WILL BE REVIEWED ON A CASE-BY-CASE BASIS TO ENSURE THEY MEET CURRENT MINIMUM REQUIREMENTS FOR INSTALLATION AND FREEZE PROTECTION.

JANUARY 2013 NO SCALE

City of Bellevue WATER UTILITY

TITLE 3" TO 10" REDUCED PRESSURE DETECTOR ASSEMBLY FOR FIRE SPRINKLER SYSTEMS (OUTSIDE INSTALLATION) NO. W-47

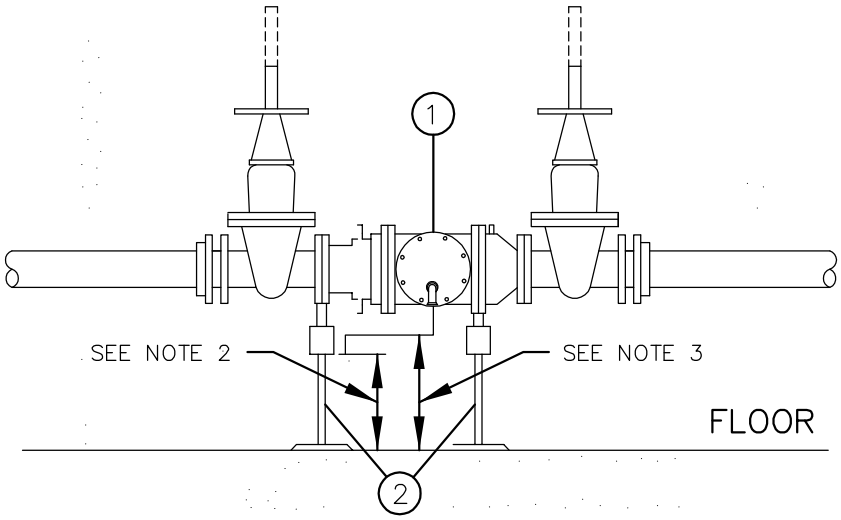

1. LINE-SIZED WA STATE APPROVED REDUCED PRESSURE BACKFLOW ASSEMBLY, COMPLETE WITH (2) RESILIENT SEATED O.S.&Y. GATE VALVES AND (4) RESILIENT SEATED TEST COCKS.

2. TWO ADJUSTABLE PIPE STANCHIONS, BOLTED TO FLOOR. REQUIRED FOR ASSEMBLIES 2 1/2" AND LARGER.

NOTES:

1. WHEN THE REDUCED PRESSURE ASSEMBLY IS LOCATED INSIDE A BUILDING A SIZED DRAIN LINE SHALL BE PROVIDED FOR RELIEF PORT. THERE MUST BE AN APPROVED AIR GAP BETWEEN THE RELIEF PORT AND DRAIN.
2. ALLOW 12"+ NOMINAL DIAMETER OF ASSEMBLY CLEARANCE BELOW RELIEF PORT FOR REPAIR. MAXIMUM CLEARANCE OF 5'.
3. ASSEMBLY TO BE MAINTAINED BY OWNER AND ANNUAL CERTIFICATION REQUIRED.
4. SIDE CLEARANCES TO WALL;
   VALVE SIZE 2" AND LESS: 6" CLEARANCE.
   VALVE SIZE 3" AND ABOVE: 12" CLEARANCE.
5. TESTING IS REQUIRED BY A WASHINGTON STATE DEPARTMENT OF HEALTH CERTIFIED BACKFLOW ASSEMBLY TESTER UPON INSTALLATION AND ANNUALLY THEREAFTER. ASSEMBLY TO BE MAINTAINED BY OWNER.
6. PROTECT AGAINST FREEZING OR DAMAGE. USE HEAT-TAPE IF AREA IS SUBJECT TO FREEZING.
7. INTERIOR WATER APPURTENANCES MUST CONFORM TO UNIFORM PLUMBING CODE REQUIREMENTS.
8. DEVICE TO BE INSTALLED NO HIGHER THAN 5 FEET ABOVE FLOOR.
9. RPBA INSTALLATIONS THAT DIFFER FROM THE STANDARD DETAIL MUST BE APPROVED BY THE CROSS CONNECTION PROGRAM ADMINISTRATOR (425-452-5208) AND WILL BE REVIEWED ON A CASE-BY-CASE BASIS TO ENSURE THEY MEET CURRENT MINIMUM REQUIREMENTS FOR INSTALLATION AND FREEZE PROTECTION.

City of Bellevue

WATER UTILITY

TITLE

REDUCED PRESSURE BACKFLOW ASSEMBLY (INSIDE INSTALLATION)

JANUARY 2013

NO SCALE

NO. W-48

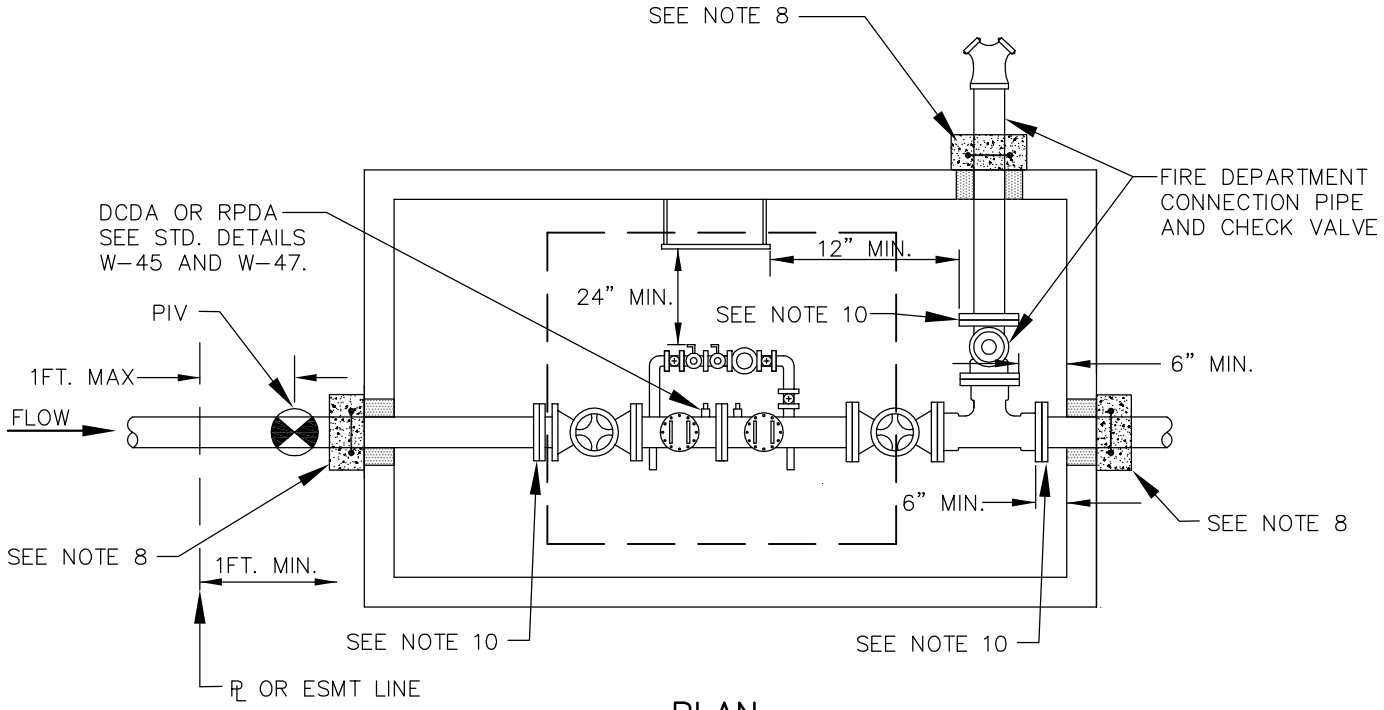

PLAN

NOTES:

1. FDC TO BE LOCATED DOWNSTREAM OF DCDA (DOUBLE CHECK DETECTOR ASSEMBLY) OR RPDA (REDUCED PRESSURE DETECTOR ASSEMBLY).
2. PROVIDE MINIMUM OF 6" CLEARANCE BETWEEN VALVES, FITTINGS AND THE VAULT WALL.
3. ALL DIMENSIONS SHOWN ARE MINIMUM ALLOWED.
4. INSTALL FDC LINE ON SIDE OF VAULT WITH GREATEST AVAILABLE SPACE, AS SHOWN.
5. WHEN FDC LINE IS ROUTED THROUGH THE VAULT, THE VAULT SIZE SHALL BE INCREASED TO MATCH THE SIZE REQUIRED FOR THE MINIMUM CLEARANCES.
6. ALL PIPE JOINTS SHALL BE RESTRAINED. CONCRETE BLOCKING IS REQUIRED AT CHANGES IN DIRECTION.
7. CORE DRILL (O.D. +2") VAULT IF KNOCK-OUTS ARE NOT PROVIDED.
8. SEAL PIPE PENETRATIONS WITH WATER-TIGHT GROUT. RESTRAIN INLET/OUTLET PIPES WITH MEGALUG MID-SPAN RESTRAINT AND THRUST BLOCK ADJACENT TO VAULT (DETAIL W-56).
9. WHEN PIV IS LOCATED IN VAULT, THE VAULT SIZE SHALL BE INCREASED TO MATCH THE SIZE REQUIRED TO ACCOMMODATE PIV INSTALLATION WITH 6" CLEARANCES ON VAULT INTERIOR. (LID TO BE CORE DRILLED – USE LINK SEAL/GROUT TO SEAL PENETRATION).
10. MEGAFLANGE ON PE CONNECTION TO FLANGED VALVES AND TEE.
11. TESTING IS REQUIRED BY A WASHINGTON STATE DEPARTMENT OF HEALTH CERTIFIED BACKFLOW ASSEMBLY TESTER UPON INSTALLATION AND ANNUALLY THEREAFTER. ASSEMBLY TO BE MAINTAINED BY OWNER.
12. POSITION DCVA WITHIN HATCH TO ALLOW FOR VERTICAL REMOVAL.

City of Bellevue

WATER UTILITY

TITLE

REQUIREMENTS FOR FDC AND CHECK VALVE ROUTED THROUGH BACKFLOW ASSEMBLY VAULT-1

NO. W-49

JANUARY 2013

NO SCALE

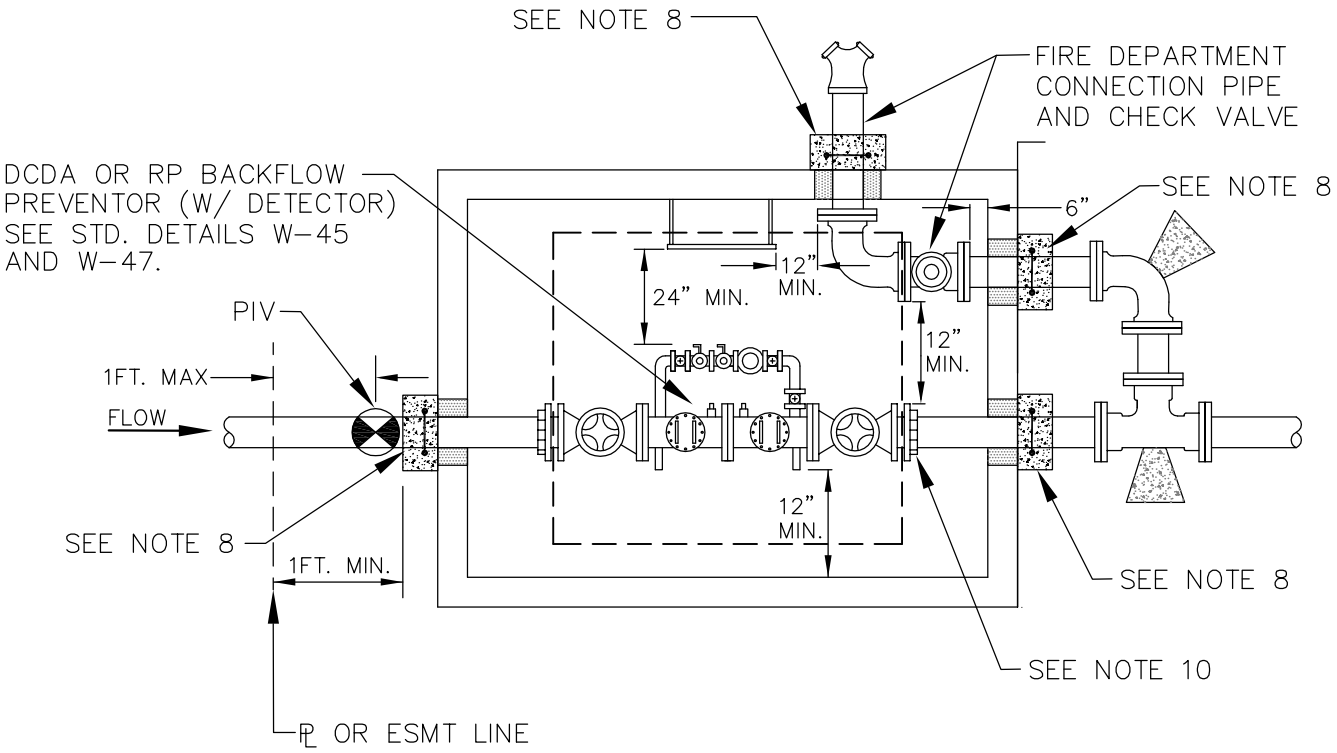

PLAN

NOTES:

1. FDC TO BE LOCATED DOWNSTREAM OF DCDA (DOUBLE CHECK DETECTOR ASSEMBLY) OR RPDA (REDUCED PRESSURE DETECTOR ASSEMBLY).
2. PROVIDE MINIMUM OF 6" CLEARANCE BETWEEN VALVES, FITTINGS AND THE VAULT WALL.
3. ALL DIMENSIONS SHOWN ARE MINIMUM ALLOWED.
4. INSTALL FDC LINE ON SIDE OF VAULT WITH GREATEST AVAILABLE SPACE, AS SHOWN.
5. WHEN FDC LINE IS ROUTED THROUGH THE VAULT, THE VAULT SIZE SHALL BE INCREASED TO MATCH THE SIZE REQUIRED FOR THE MINIMUM CLEARANCES.
6. ALL PIPE JOINTS SHALL BE RESTRAINED. CONCRETE BLOCKING IS REQUIRED AT CHANGES IN DIRECTION.
7. CORE DRILL (O.D. +2") VAULT IF KNOCK-OUTS ARE NOT PROVIDED.
8. SEAL PIPE PENETRATIONS WITH WATER-TIGHT GROUT. RESTRAIN INLET/OUTLET PIPES WITH MEGALUG MID-SPAN RESTRAINT AND THRUST BLOCK ADJACENT TO VAULT (DETAIL W-56).
9. WHEN PIV IS LOCATED IN VAULT, THE VAULT SIZE SHALL BE INCREASED TO MATCH THE SIZE REQUIRED TO ACCOMMODATE PIV INSTALLATION WITH 6" CLEARANCES ON VAULT INTERIOR. (LID TO BE CORE DRILLED – USE LINK SEAL/GROUT TO SEAL PENETRATION).
10. MEGAFLANGE ON PE CONNECTION TO FLANGED VALVES AND TEE.
11. TESTING IS REQUIRED BY A WASHINGTON STATE DEPARTMENT OF HEALTH CERTIFIED BACKFLOW ASSEMBLY TESTER UPON INSTALLATION AND ANNUALLY THEREAFTER. ASSEMBLY TO BE MAINTAINED BY OWNER.
12. POSITION DCVA WITHIN HATCH TO ALLOW FOR VERTICAL REMOVAL.

City of Bellevue

WATER UTILITY

TITLE

REQUIREMENTS FOR FDC AND CHECK VALVE ROUTED THROUGH BACKFLOW ASSEMBLY VAULT-2

NO. W-50

JANUARY 2013

NO SCALE

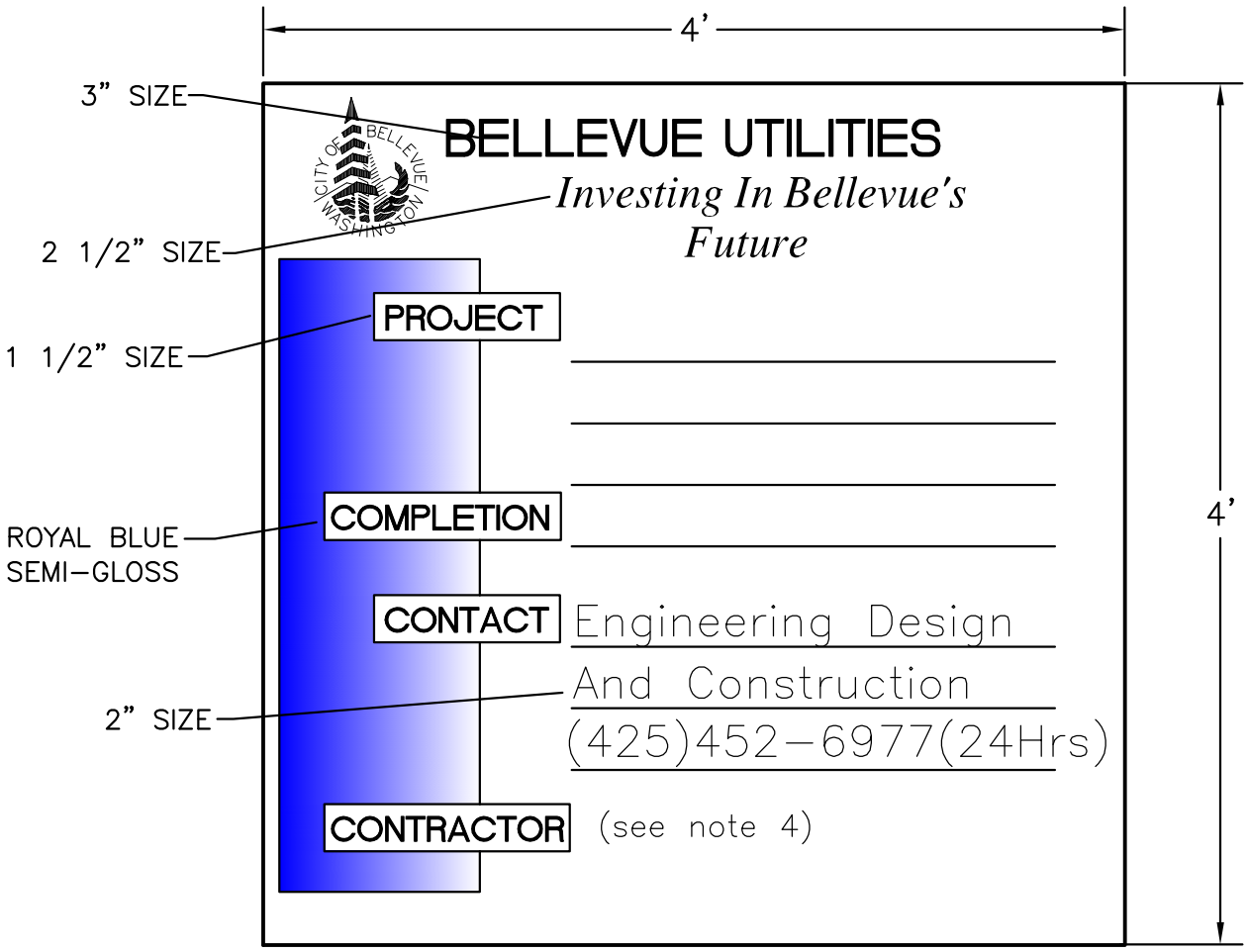

NOTES

1. SIGN MATERIAL: 5/8" EXTERIOR PLYWOOD, PAINTED WHITE(GLOSS OR SEMI GLOSS).
2. LETTERING: BLACK VINYL OR SEMI-GLOSS PAINT.
3. CONTRACTOR SHALL INSTALL PROJECT SIGN(S) OF 4x4 PT POST AT LOCATION(S) SHOWN ON THE PLANS OR AS DIRECTED BY THE ENGINEER.
4. CONTRACTOR SHALL PROVIDE A WHITE VINYL DECAL WITH 2-INCH BLACK LETTERING LISTING THE CONTRACTOR'S NAME AND BUSINESS TELEPHONE NUMBER.

City of Bellevue

WATER UTILITY

TITLE

PROJECT SIGN DETAIL

JANUARY 2013

NO SCALE

NO. W-53

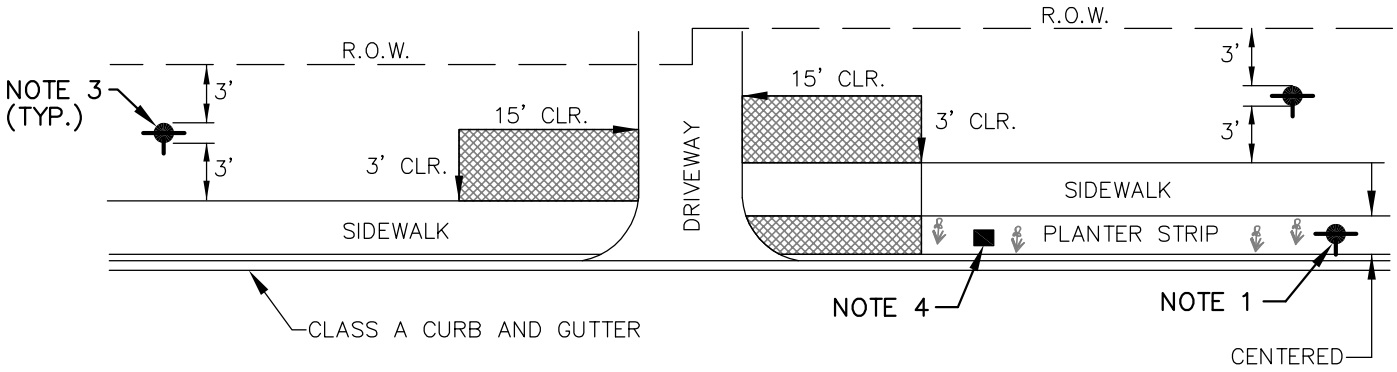

WITH VERTICAL CURB

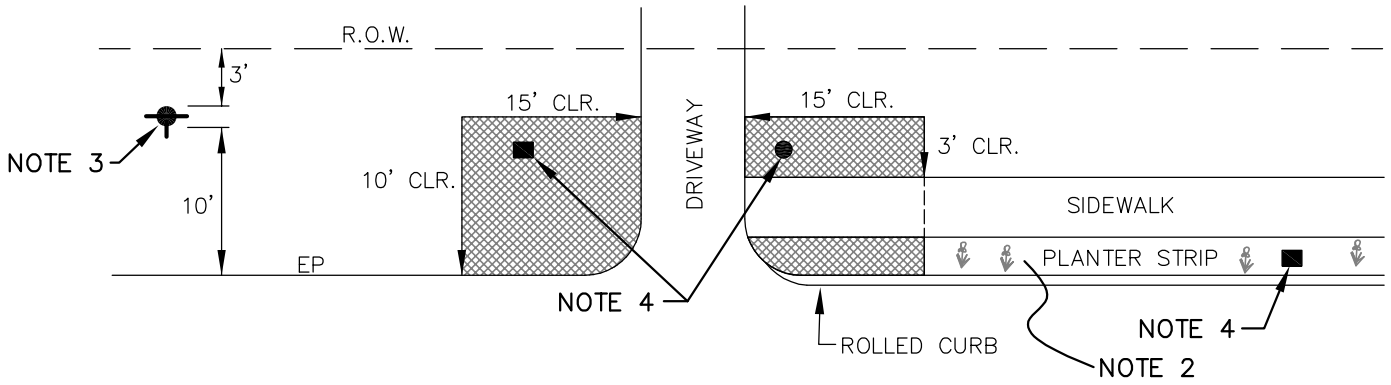

WITHOUT VERTICAL CURB

CLEAR ZONE, NO ABOVE GROUND APPURTENANCES.

NOTES:

1. CBD ONLY OR WHEN PLANTER STRIP WIDTH IS 6FT OR GREATER.
2. NO ABOVE GROUND APPURTENANCES IN THE PLANTER STRIP BEHIND ROLLED CURBS.
3. HYDRANTS TO BE LOCATED 3FT. FROM THE EDGE OF RIGHT OF WAY.
4. BELOW GROUND FACILITIES IN CLEARANCE ZONES, SIDEWALKS AND PLANTER STRIPS MUST BE RATED FOR TRAFFIC LOADING.
5. ALL DIMENSIONS SHOWN ARE MINIMUM.

City of Bellevue

WATER UTILITY

TITLE

ROADWAY CLEARANCES
FOR ABOVE GROUND APPURTENANCES

JANUARY 2013

NO SCALE

NO. W-54

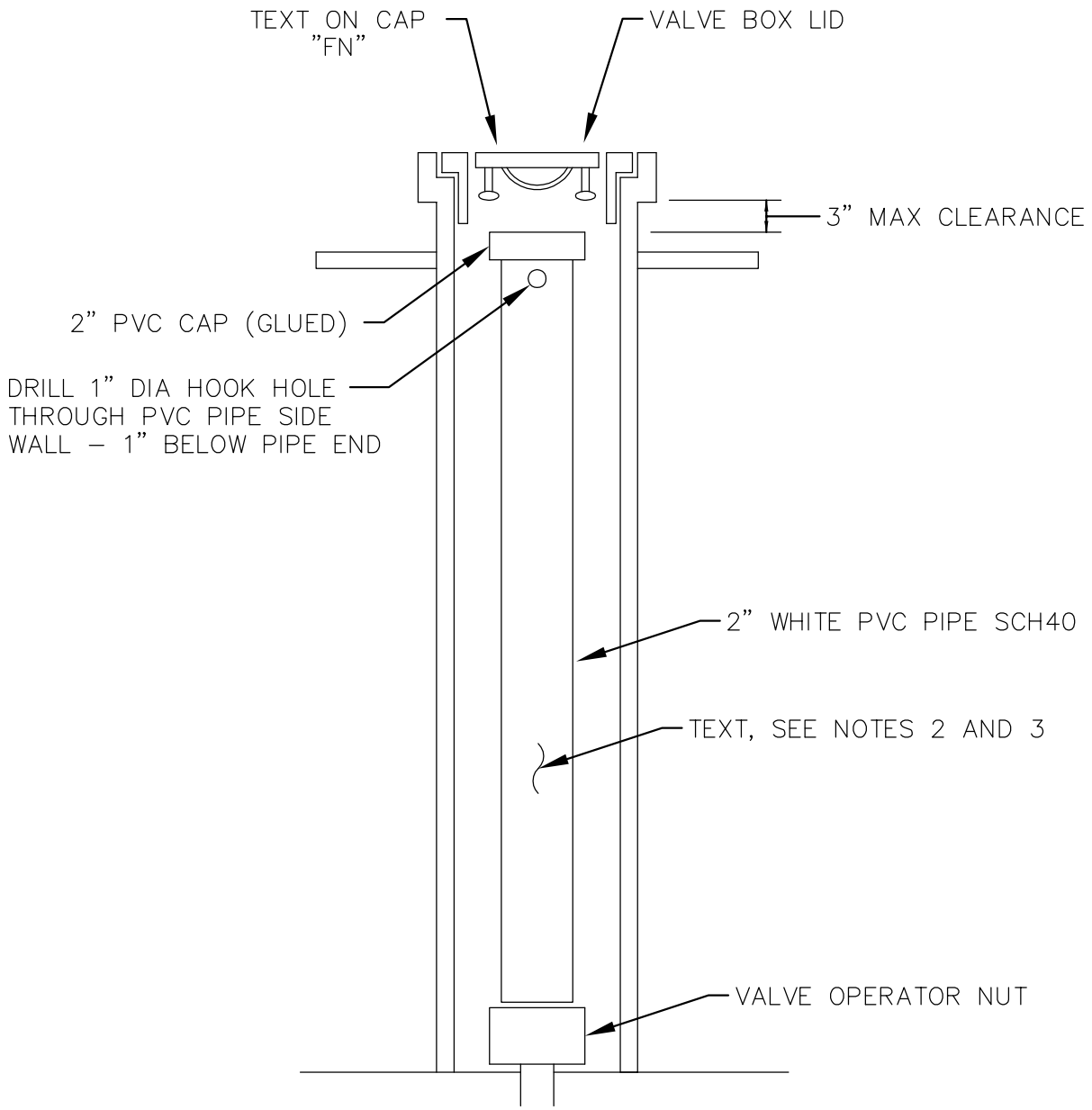

NOTES:

1. CUT 2" PVC SCH40 TO LENGTH TO REST ON OPERATOR NUT AND EXTEND WITHIN 3" OF TOP OF VALVE BOX .
2. TEXT ON PVC PIPE SHALL READ "FIRE LINE – DO NOT CLOSE VALVE."
3. TEXT SHALL BE PRINTED CLEARLY AND NEATLY WITH A BLACK PERMANENT INK MARKING PEN.

City of Bellevue

WATER UTILITY

TITLE

FIRELINE VALVE MARKER

JANUARY 2013

NO SCALE

NO. W–55

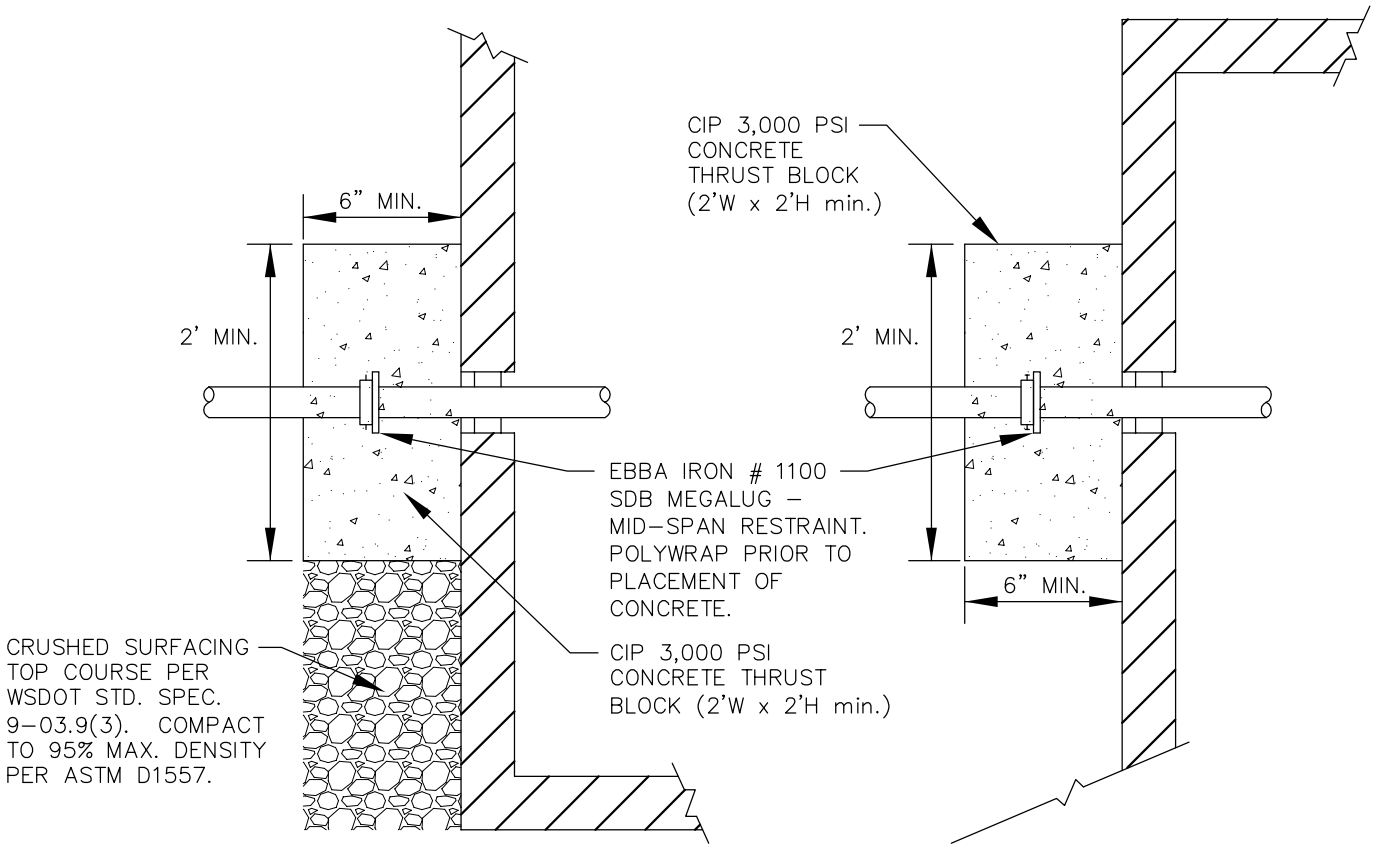

THRUST BLOCK ADJACENT TO VAULT

NTS

City of Bellevue

WATER UTILITY

TITLE

THRUST BLOCK ADJACENT TO VAULT

JANUARY 2013

NO SCALE

NO. W–56

APPENDIX W-2

DRAFTING STANDARDS

WATER SYMBOLS .....PAGE 1

SANITARY/STORM SEWER SYMBOLS .....PAGE 2

SURVEY SYMBOLS.....PAGE 3

SURFACE FEATURES/LANDSCAPE SYMBOLS.....PAGE 4

SIGNALIZATION SYMBOLS.....PAGE 5

CHANNELIZATION SYMBOLS .....PAGE 7

GAS/POWER/TELEPHONE SYMBOLS .....PAGE 8

SURFACE FEATURES LINETYPES.....PAGE 9

SURVEY LINETYPES .....PAGE 10

UTILITIES LINETYPES .....PAGE 11

TEXT STYLES.....PAGE 12

NOTES.....PAGE 12

WATER SYMBOLS

SYMBOL EXIST.	SYMBOL PROP.	DESCRIPTION	BLOCK	LAYER
		ADAPTER, FL. x M.J.	WAFM/SAME	WA–FITT–3333–SYM
		BENDS:		
		90 DEGREE BEND, FL.	W90F/SAME	WA–FITT–3333–SYM
		45 DEGREE BEND, FL.	W45F/SAME	WA–FITT–3333–SYM
		22.5 DEGREE BEND, FL.	W22F/SAME	WA–FITT–3333–SYM
		11.25 DEGREE BEND, FL.	W11F/SAME	WA–FITT–3333–SYM
		90 DEGREE BEND, M.J.	W90M/SAME	WA–FITT–3333–SYM
		45 DEGREE BEND, M.J.	W45M/SAME	WA–FITT–3333–SYM
		22.5 DEGREE BEND, M.J.	W22M/SAME	WA–FITT–3333–SYM
		11.25 DEGREE BEND, M.J.	W11M/SAME	WA–FITT–3333–SYM
		VERTICAL BEND, FL.	WVTF/SAME	WA–FITT–3333–SYM
		VERTICAL BEND, M.J.	WVTM/SAME	WA–FITT–3333–SYM
		REDUCERS:		
		REDUCER, FL.	WRF/WRFP	WA–FITT–3333–SYM
		REDUCER, M.J.	WRM/WRMP	WA–FITT–3333–SYM
		REDUCER, M.J. x FL.	WRMF/WRMFP	WA–FITT–3333–SYM
		REDUCER, M.J. x P.E.	WRMB/WRMBP	WA–FITT–3333–SYM
		REDUCER, P.E. x M.J./FL. x M.J.	WRBM/WRBMP	WA–FITT–3333–SYM
		TEES:		
		TAPPING TEE & VALVE, FL. x M.J.	WTTM/WTTMP	WA–VALV–3333–SYM
		TEE, FL.	WTF/SAME	WA–FITT–3333–SYM
		TEE, M.J.	WTM/SAME	WA–FITT–3333–SYM
		TEE, M.J. x FL.	WTMF/SAME	WA–FITT–3333–SYM
		VALVES:		
		BUTTERFLY VALVE, FL.	WBFV/WBFVP	WA–VALV–3333–SYM
		BUTTERFLY VALVE, FL. x M.J.	WBVFM/WBVFMP	WA–VALV–3333–SYM
		BUTTERFLY VALVE, M.J.	WBVM/WBVMP	WA–VALV–3333–SYM
		GATE VALVE, FL.	WGV/WGVP	WA–VALV–3333–SYM
			SAME – INDICATES USE SAME BLOCK FOR PROPOSED.	3333–USE EXST/PRO

American Public Works Association Washington State Chapter

City of Bellevue

WATER SYMBOLS

PAGE 2

SYMBOL EXIST.	SYMBOL PROP.	DESCRIPTION (ABBR)		BLOCK	LAYER
		GATE VALVE, FL. x M.J.		WGVFM/WGVFMP	WA–VALV–3333–SYM
		GATE VALVE, M.J.		WGVM/WGVMP	WA–VALV–3333–SYM
		AIR RELIEF VALVE	(AIR)	WARV/WARVP	WA–VALV–3333–SYM
		BLOW–OFF VALVE	(BO)	WBOV/WBOVP	WA–VALV–3333–SYM
		CHECK VALVE	(CK)	WCKV/WCKVP	WA–VALV–3333–SYM
		PLUG VALVE	(PV)	WPV/WPVP	WA–VALV–3333–SYM
		CAP/PLUG		WCAP	WA–FITT–3333–SYM
		COUPLING	(CPL)	WCOUP/WCOUPP	WA–FITT–3333–SYM
		GUARD POST	(GP)	WGP/WGPP	WA–FITT–3333–SYM
		REDUCER	(RED)	WRED/WREDP	WA–FITT–3333–SYM
		THRUST BLOCK	(TB)	WTB/WTBP	WA–FITT–3333–SYM
		WATER METER	(WM)	WMET/WMETP	WA–METR–3333–SYM
		FIRE HYDRANTS:			
		2–PORT	(FH)	WFH2/WFH2P	WA–FHYD–3333–SYM
		3–PORT	(FH)	WFH3/WFH3P	WA–FHYD–3333–SYM
		JOINTS:			
		FLANGE/BLIND FL	(FL)/(BL FL)	WFL	WA–FITT–3333–SYM
		MECHANICAL	(MJ)	WMJ	WA–FITT–3333–SYM
		PUSH–ON/HUB		WHUB	WA–FITT–3333–SYM
		THREAD	(THD)	WTH	WA–FITT–3333–SYM

3333 – USE EXST/PROP

SANITARY/STORM SEWER SYMBOLS

SYMBOL EXIST.	SYMBOL PROP.	DESCRIPTION (ABBR)		BLOCK	LAYER
		SAN. SEWER CLEAN OUT	(CO)	SSCO/SSCOP	SS–STCR–3333–SYM
		SAN. SEWER MANHOLE	(SSMH)	SSMH/SSMHP	SS–STCR–3333–SYM
		STORM DRAIN CATCH BASIN	(CB)	SDCB/SDCBP	SD–STCR–3333–SYM
		STORM DRAIN CULVERT	(CULV)	SDC/SDCP	SD–GLIN–3333–SYM
		STORM DRAIN MANHOLE	(SDMH)	SDMH/SDMHP	SD–STCR–3333–S

3333 – USE EXST/PR

American Public Works Association Washington State Chapter

City of Bellevue

SURVEY SYMBOLS

SYMBOL THEOR./ EXIST.	SYMBOL FOUND/ PROP.	DESCRIPTION	(ABBR)	BLOCK	LAYER
		ANGLE POINT	(AP)	SAP/SAPP	SV–CTRL–3333–SYM
		BENCH MARK	(BM)	SBM/SBMP	SV–CTRL–3333–SYM
		BLOCK CORNER	(BC)	SBC/SBCP	SV–CTRL–3333–SYM
		IRON PIPE	(IP)	SIP/SIPP	SV–CTRL–3333–SYM
		MONUMENT (IN CASE)	(MIC)	SMIC/SMICP	SV–CTRL–3333–SYM
		MONUMENT (SURFACE)	(MON)	SMON/SMONP	SV–CTRL–3333–SYM
		OWNERSHIP TIE	(OT)	SOT	SV–LOTN–3333–SYM
		SECTION DATA:			
		SECTION CENTER		SSCT	SV–SECT–3333–SYM
		SECTION CORNER		SSC/SSCP	SV–SECT–3333–SYM
		QUARTER CORNER		SQC/SQCP	SV–QSCT–3333–SYM
		SIXTEENTH CORNER		SSXC/SSXCP	SV–16ST–3333–SYM
		CLOSING CORNER		SCC/SCCP	SV–222A–3333–SYM
MC	MC	MEANDER CORNER	(MC)	SMC/SMCP	SV–222A–3333–SYM
WC	WC	WITNESS CORNER	(WC)	SWC/SWCP	SV–SECT–3333–SYM
		SOIL BORING	(SB)	SSB/SSBP	SV–SOIL–3333–SYM
		SPOT ELEVATION	(SE)	SSE/SSEP	SV–CTRL–3333–SYM
		TAX LOT / PARCEL NUMBER		STLN	SV–222B–3333–SYM

222A – USE RANG/SECT/TWNS
222B – USE PRCL/LOTN
3333 – USE EXST/PROP OR FOUN/THEO

BLOCK: SNA
LAYER: SV–NORA–3333–SYM

BLOCK: SDAT
LAYER: SV–DATM–3333–SYM

American Public Works Association Washington State Chapter

City of Bellevue

PAGE 4

SURFACE FEATURES/LANDSCAPING

SYMBOL EXIST.	SYMBOL PROP.	DESCRIPTION	BLOCK	LAYER
BUS	BUS	BUS STOP	SFBS/SFBSP	SF–BUSS–3333–SYM
		EMBANKMENT	SFB/SFBP	SF–EMBT–3333–SYM
		MAIL BOX	SFMB/SFMBP	SF–MAIL–3333–SYM
		RIP RAP	SFRR/SFRRP	SF–RIPR–3333–SYM
		ROCKERY	SFR/SFRP	SF–ROCK–3333–SYM
		SHRUB	SFS/SFSP	SF–VEGE–3333–SYM
		SIGN	SFSN/SFSNP	SF–SIGN–3333–SYM
		TREE (Conifer)	SFC/SFCP	SF–VEGE–3333–SYM
		TREE (Deciduous)	SFD/SFDP	SF–VEGE–3333–SYM
		YARD LIGHT	SFL/SFLP	SF–LITE–3333–SYM

3333 – USE EXST/PROP

American Public Works Association Washington State Chapter

City of Bellevue

SIGNALIZATION SYMBOLS

SYMBOL EXIST.	SYMBOL PROP.	DESCRIPTION	BLOCK	LAYER
		AERIAL DISCONNECT	TAD/TADP	TF-SIGL-3333-SYM
		AERIAL TERMINAL COMPARTMENT	TATC/TATCP	TF-SIGL-3333-SYM
		DETECTORS:		
		DIPOLE DETECTOR	TDD/TDDP	TF-SIGL-3333-SYM
		QUADRAPOLE DETECTOR	TQD/TQDP	TF-SIGL-3333-SYM
		PEDESTRIAN DETECTOR	TPD/TPDP	TF-SIGL-3333-SYM
		EMERGENCY VEHICLE INDICATOR LIGHTS:		
		INDICATOR LIGHTS	TIL/TILP	TF-SIGL-3333-SYM
		OPTICOM SENSOR	TOS/TOSP	TF-SIGL-3333-SYM
		OPTICOM SENSOR W/ INDICATOR LIGHTS	TOSL/TOSLP	TF-SIGL-3333-SYM
		FLASHING WARNING SYSTEM	TFWS/TFWSP	TF-SIGL-3333-SYM
		JUNCTION BOX (TYPE I, II, III)	TJB1/TJB1P TJB2/TJB2P TJB3/TJB3P	TF-SIGL-3333-SYM TF-SIGL-3333-SYM TF-SIGL-3333-SYM
		PEDESTRIAN PUSHBUTTON POST W/ PUSHBUTTON	TPB/TPBP	TF-SIGL-3333-SYM
		PEDESTRIAN SIGNAL HEAD	TPSH/TPSHP	TF-SIGL-3333-SYM
		POLE NOTE	TPN	TF-SIGL-3333-SYM
		R/R CROSSING GATE	TRG/TRGP	TF-SIGL-3333-SYM
		R/R CROSSING SIGNAL	TRC/TRCP	TF-SIGL-3333-SYM

3333-USE EXST/PRO

American Public Works Association Washington State Chapter

City of Bellevue

PAGE 6

SIGNALIZATION SYMBOLS

SYMBOL EXIST.	SYMBOL PROP.	DESCRIPTION	BLOCK	LAYER
		SIGNAL CONTROLLER	TSC/TSCP	TF-SIGL-3333-SYM
		SIGNAL LOAD CENTER	TSLC/TSLCP	TF-SIGL-3333-SYM
		STREET LIGHT ASSEMBLY	TSLA/TSLAP	TF-SIGL-3333-SYM
		TRAFFIC SIGNS:		
		BRIDGE	TSB/TSBP	TF-SIGN-3333-SYM
		CANTILEVERED	TSCL/TSCLP	TF-SIGN-3333-SYM
		SINGLE POST	TSS/TSSP	TF-SIGN-3333-SYM
		DOUBLE POST	TSD/TSDP	TF-SIGN-3333-SYM
		TRAFFIC SIGNAL POLE	TPOL/TPOLP	TF-SIGL-3333-SYM
		TRAFFIC SIGNAL POLE W/ LUMINAIRE	TSPL/TSPLP	TF-SIGL-3333-SYM
		TRAFFIC SIGNAL SUPPORT POLE	TSPOL/TSPOLP	TF-SIGL-3333-SYM
		VEHICLE SIGNAL HEAD	TVH/TVHP	TF-SIGL-3333-SYM
		VEHICLE SIGNAL HEAD W/ARROW INDICATOR	TVHA/TVHAP	TF-SIGL-3333-SYM
		WIRE NOTE	TWN	TF-SIGL-3333-SYM

3333 – USE EXST/PROP

American Public Works Association Washington State Chapter

City of Bellevue

CHANNELIZATION SYMBOLS

SYMBOL EXIST.	SYMBOL PROP.	DESCRIPTION	BLOCK	LAYER
		BIKE PATH	CB/CBP	TF–CHAN–3333–SYM
		HANDICAP SYMBOL	CHS/CHSP	TF–CHAN–3333–SYM
		H.O.V. LANE SYMBOL	CHOV/CHOVP	TF–CHAN–3333–SYM
		ONLY	CO/COP	TF–CHAN–3333–SYM
		RAILROAD CROSSING	CRR/CRRP	TF–CHAN–3333–SYM
		SCHOOL	CSC/CSCP	TF–CHAN–3333–SYM
		STOP	CS/CSP	TF–CHAN–3333–SYM
		LANE CONTROL ARROWS: STRAIGHT ARROW	CSA/CSAP	TF–CHAN–3333–SYM
		LT.RT.STR.ARROW	CLRS/CLRSP	TF–CHAN–3333–SYM
		LEFT–RIGHT ARROW	CLR/CLRP	TF–CHAN–3333–SYM
		2–WAY LEFT TURN	C2W/C2WP	TF–CHAN–3333–SYM 3333 – USE EXST/PROP

American Public Works Association Washington State Chapter

City of Bellevue

CHANNELIZATION SYMBOLS

PAGE 8

SYMBOL EXIST.	SYMBOL PROP.	DESCRIPTION	BLOCK	LAYER
		LEFT TURN ARROW	CLT/CLTP	TF–CHAN–3333–SYM
		RIGHT TURN ARROW	CRT/CRTP	TF–CHAN–3333–SYM
		LEFT–SRAIGHT ARROW	CLS/CLSP	TF–CHAN–3333–SYM
		RIGHT–STRAIGHT ARROW	CRS/CRSP	TF–CHAN–3333–SYM
		RAISED MARKERS:		
○	●	LANE MARKERS TYPE I	CLM1/CLM1P	TF–CHAN–3333–SYM
□	■	LANE MARKERS TYPE II	CLM2/CLM2P	TF–CHAN–3333–SYM

3333 – USE EXST/PROP

GAS/POWER/TELEPHONE SYMBOLS

SYMBOL EXIST.	SYMBOL PROP.	DESCRIPTION	(ABBR)	BLOCK	LAYER
		GAS METER	(GM)	GMET/GMETP	GS–METR–3333–SYM
		GAS VALVE	(GV)	GV/GVP	GS–VALV–3333–SYM
△	▲	PAD MOUNTED TRANSFORMER	(P TRAN)	PTRAN/PTRANP	PO–STCR–3333–SYM
P	P	POWER VAULT	(POW V)	PV/PVP	PO–STCR–3333–SYM
⊠		TRANSMISSION TOWER	(TRANS TWR)	PTWR	PO–STCR–EXST–SYM
-o-	-●-	UTILITY POLE	(PP, TP)	UP/UPP	11–STCR–3333–SYM
←	←	UTILITY POLE ANCHOR		UPA/UPAP	11–STCR–3333–SYM
□	■	TELEPHONE RISER	(TEL R)	TELR/TELRP	TL–STCR–3333–SYM
T	T	TELEPHONE VAULT	(TEL V)	TV/TVP	TL–STCR–3333–SYM

11 – USE PO/TL
3333 – USE EXST/PROP

American Public Works Association Washington State Chapter

City of Bellevue

LINETYPES

LINETYPE	DESCRIPTION	COLOR	LT NAME	LAYER
	SURFACE FEATURES:			
0.2" 0.1"	BUILDING LINE (EXISTING) NO. 2.5 PEN	GREEN	EXBUILD	SF-BLDG-EXST-LIN
	BUILDING LINE (PROPOSED) NO. 2.5 PEN	GREEN	CONTINUOUS	SF-BLDG-PROP-LIN
1.5" 0.1" 0.1" 0.05"	CREEK/DITCH CENTERLINE (EXIST.) NO. 0 PEN	WHITE	DITCH	SF-DTCH-EXST-LIN
	CREEK/DITCH CENTERLINE (PROP.) NO. 2.5 PEN	GREEN	DITCH	SF-DTCH-PROP-LIN
	CURB/PAVEMENT/SIDEWALK (EX) NO. 0 PEN	WHITE	CONTINUOUS	SF-222A-EXST-LIN
	CURB/PAVEMENT/SIDEWALK (PROP) NO. 1 PEN	CYAN	CONTINUOUS	SF-222A-PROP-LIN
1.0" 0.075"	FENCE (EXISTING) NO. 000 PEN	YELLOW	FNC1	SF-FENC-EXST-LIN
	FENCE (PROPOSED) NO. 1 PEN	CYAN	FNC1	SF-FENC-PROP-LIN
1.0" 0.075"	GUARDRAIL (EXISTING) NO. 000 PEN	YELLOW	EGR1	SF-GURD-EXST-LIN
	GUARDRAIL (PROPOSED) NO. 1 PEN	CYAN	PGR1	SF-GURD-PROP-LIN
2.0" 0.1" 0.1"	LAKE/POND NO. 0 PEN	WHITE	LAKE	SF-LAKE-EXST-LIN
0.15" 0.15"	MARSH/SWAMP PERIMETER NO. 0 PEN	WHITE	MARSH	SF-SWMP-EXST-LIN
0.5" 0.1" 0.125"	RAILROAD NO. 0 PEN	WHITE	R1R1	SF-RLRD-EXST-LIN
0.075"	RETAINING WALL (EXISTING) NO. 0 PEN	WHITE	ERW1	SF-WALL-EXST-LIN
	RETAINING WALL (PROPOSED) NO. 1 PEN	CYAN	PRW1	SF-WALL-PROP-LIN
	RIVERBANK/SHORELINE NO. 1 PEN	CYAN	CONTINUOUS	SF-222B-EXST-LIN

222A – USE CURB/PVMT
222B – USE RIVR/SHOR

American Public Works Association Washington State Chapter

City of Bellevue

PAGE 10

LINETYPES

LINETYPE	DESCRIPTION	COLOR	LT NAME	LAYER
	SURVEY:			
1.2" 0.05" 0.1"	CENTERLINE (EXISTING) NO. 000 PEN	YELLOW	EXCNTL	SV–CNTL–EXST–LIN
0.1"	CENTERLINE (PROPOSED) NO. 2.5 PEN	GREEN	PROCNTL	SV–CNTL–PROP–LIN
0.05"	CONTOUR (DEPRESSION) NO. 000 PEN	YELLOW	DEC1	SV–CONT–DEPR–LIN
0.5" * * * 0.1"	CONTOUR (EXISTING) NO. 000 PEN	YELLOW	CON	SV–CONT–EXST–LIN
* * *	CONTOUR (INDEX) NO. 1 PEN	CYAN	CON	SV–CONT–INDX–LIN
* * *	CONTOUR (PROPOSED) NO. 1 PEN	CYAN	CONTINUOUS	SV–CONT–PROP–LIN
0.1" 0.7" 0.04"	DONATION LAND CLAIM (EXIST.) NO. 1 PEN	CYAN	DLC	SV–DLCM–EXST–LIN
	DONATION LAND CLAIM (PROP.) NO. 2.5 PEN	GREEN	DLC	SV–DLCM–PROP–LIN
	EASEMENT (PERMANENT) NO. 1 PEN	CYAN	CONTINUOUS	SV–ESMT–PERM–LIN
0.4" 0.05"	EASEMENT (TEMPORARY) NO. 1 PEN	CYAN	TEMPESMT	SV–ESMT–TEMP–LIN
0.1" 0.05"	MEANDER LINE NO. 000 PEN	YELLOW	MEANDER	SV–MEAN–EXST–LIN
2.0" 0.075" 0.075"	PROPERTY LINE (EXISTING) NO. 000 PEN	YELLOW	PROPERT	SV–PROP–EXST–LIN
	PROPERTY LINE (PROPOSED) NO. 1 PEN	CYAN	PROPERT	SV–PROP–PROP
	RANGE/TOWNSHIP LINE NO. 2.5 PEN	GREEN	CONTINUOUS	SV–222A–EXST–LIN
0.5" 0.05" 0.1"	RESERVATION/PARK/FOREST (EX) NO. 1 PEN	CYAN	PARK	SV–PARK–EXST–LIN
	RESERVATION/PARK/FOREST (PRO) NO. 2.5 PEN	GREEN	PARK	SV–PARK–PROP–LIN
0.2" 0.05"	RIGHT–OF–WAY (EXISTING) NO. 1 PEN	CYAN	EXROW	SV–ROFW–EXST–LIN
0.1"	RIGHT–OF–WAY (PROPOSED) NO. 2.5 PEN	GREEN	CONTINUOUS	SV–ROFW–PROP–LIN
0.1"	RIGHT–OF–WAY (LIMITED ACCESS) NO. 1 PEN	CYAN	ROWL1	SV–LROW–EXST–LIN
	RIGHT–OF–WAY (LIMITED ACCESS) NO. 2.5 PEN	GREEN	ROWL1	SV–LROW–PROP–LIN
0.7" 0.05"	SECTION LINE NO. 2.5 PEN	GREEN	SECT	SV–SECT–EXST–LIN
0.1" 0.1" 0.7"	QUARTER SECTION LINE NO. 1 PEN	CYAN	QTRSECT	SV–QSCT–EXST–LIN
0.3" 0.1"	SIXTEENTH SECTION LINE NO. 1 PEN	CYAN	16THSECT	SV–16ST–EXST–LIN
0.8" 0.1" 0.2"	STATE/COUNTY/CORPORATE LIMIT NO. 2.5 PEN	GREEN	STATE	SV–222B–EXST–LIN
	STATE/COUNTY/CORPORATE LIMIT NO. 2.5 PEN	GREEN	STATE (PLINE .03"WIDE)	SV–222B–PROP–LIN

222A – USE RANG/TWNS
222B – USE STAT/CNTY/CITY
*** INSERT ELEVATION AT 6" INTERVALS (TEXT 0.1" HIGH)

American Public Works Association Washington State Chapter

City of Bellevue

LINETYPES

LINETYPE	DESCRIPTION	COLOR	LT NAME	LAYER
	UTILITIES (EXISTING):			
0.25" TV 0.1"	CABLE TELEVISION (AERIAL) NO. 0 PEN	RED	ATV	TV–ALIN–EXST–LIN
TV 0.1"	CABLE TELEVISION (BURIED) NO. 0 PEN	RED	TV	TV–BLIN–EXST–LIN
FM	FORCE MAIN NO. 0 PEN	MAGENTA	FM	SS–PLIN–EXST–LIN
G	GAS NO. 0 PEN	MAGENTA	G	GS–PLIN–EXST–LIN
O	OIL NO. 0 PEN	MAGENTA	O	OL–PLIN–EXST–LIN
0.25" P 0.1"	POWER (AERIAL) NO. 0 PEN	RED	AP	PO–ALIN–EXST–LIN
P	POWER (BURIED) NO. 0 PEN	RED	P	PO–BLIN–EXST–LIN
S	SANITARY SEWER NO. 0 PEN	WHITE	S	SS–GLIN–EXST–LIN
STE	STEAM NO. 0 PEN	MAGENTA	STE	ST–PLIN–EXST–LIN
D	STORM DRAINAGE NO. 0 PEN	WHITE	D	SD–2222–EXST–LIN
0.25" T 0.1"	TELEPHONE (AERIAL) NO. 0 PEN	RED	AT	TL–ALIN–EXST–LIN
T	TELEPHONE (BURIED) NO. 0 PEN	RED	T	TL–BLIN–EXST–LIN
0.1" 0.05"	UTILITY SERVICE LINE (GENERAL) NO. 000 PEN	YELLOW	SERV	11–SERV–EXST–LIN
W	WATER NO. 0 PEN	MAGENTA	W	WA–2222–EXST–LIN
	UTILITIES (PROPOSED):			
	MAIN LINE (LIST TYPE, SIZE, ETC.) NO. 0 PEN	*	CONTINUOUS (P–LINE .04" WIDE)	11–2222–PROP–LIN
	SERVICE (LIST TYPE, SIZE, ETC.) NO. 0 PEN	*	CONTINUOUS	11–SERV–PROP–LIN

* COLOR DEPENDS ON TYPE OF UTILITY (E.G. POWER, WATER, ETC.). TEXT IN UTILITY LINETYPES SPACED AT 3" INTERVALS.

11 – INDICATE UTILITY TYPE

2222 – USE ALIN/BLIN/GLIN/PLIN
ALIN – AERIAL LINE
BLIN – BURIED CONDUIT
GLIN – GRAVITY LINE
PLIN – PRESSURE LINE

American Public Works Association Washington State Chapter

City of Bellevue

TEXT STYLES

EXAMPLE	DESCRIPTION	STYLE	FONT	HEIGHT	COLOR	LAYER
EX. CONIFER	EXISTING FEATURES	80	SIMPLEX	0.08 INCH	YELLOW	SF-INFO-EXST-TXT
SCALE:	DRAWING SCALE	SCALE	ITALIC	0.12 INCH	YELLOW	SV-NORA-EXST-TXT
PROJECT	PROJECT TITLE	200	SIMPLEX	0.20 INCH	GREEN	RE-TITL-EXST-TXT
PROPOSED	GENERAL INSTRUCTION	120	SIMPLEX	0.12 INCH	CYAN	RE-INST-PROP-TXT
SEWER	PROPOSED SANITARY SEWER INSTRUCTIONS	120	SIMPLEX	0.12 INCH	CYAN	SS-INST-PROP-TXT
WATER	PROPOSED WATER INSTRUCTIONS	120	SIMPLEX	0.12 INCH	CYAN	WA-INST-PROP-TXT
STREET	STREET NAMES	240	SIMPLEX	0.24 INCH	GREEN	RE-STRT-EXST-TXT

NOTES

1. READ APWADOC2.DOC FOR MORE INFORMATION ON SYMBOL/LINETYPE INSERTION AND USE OF APWA MENUS.
2. INSERT MON OR MON-IN-CASE SYMBOLS INTO CENTER OF MONUMENTED SECTION CORNERS.
3. USE WATER VALVE AND FITTING SYMBOLS FOR SEWER FORCEMAIN VALVES AND FITTINGS.
4. LINETYPES ARE LOADED FROM THE APWALIN2.LIN LINETYPE FILE.
5. DITCH LINETYPE FLOW DIRECTION ARROW MUST BE INSERTED AT ENDS OF DASHED LINES AS SHOWN ABOVE (BLOCK NAME IS "FL").
6. COMPOSITE LINETYPES ARE DRAWN USING LISP ROUTINES IN APWA MENUS. ALTERNATE METHOD IS TO INSERT BLOCKS ALONG CONTINUOUS LINES AS FOLLOWS:

LINETYPE	BLOCK	SPACING (INCHES)
EXISTING FENCE	FP	1.0
PROPOSED FENCE	FP	1.0
EXISTING GUARDRAIL	GR	1.0
PROPOSED GUARDRAIL	GRP	1.0
EXISTING RAILROAD	RR	0.5
EXISTING RETAINING WALL	EW	0.25
PROPOSED RETAINING WALL	PW	0.25
DEPRESSION CONTOUR	DEP	0.1
LIMITED ACCESS R.O.W.	LA	0.1

7. LINEWEIGHTS ARE BASED ON DISPOSABLE LIQUID INK PLOTTER

POINT SIZES:	COLOR	PEN SIZE	NUMBER
	YELLOW	0.25	3x0
	MAGENTA RED WHITE	0.35	0
	CYAN	0.5	1
	GREEN	0.7	2 1/2

American Public Works Association Washington State Chapter

City of Bellevue

APPENDIX W-3

SAMPLE TITLE BLOCK

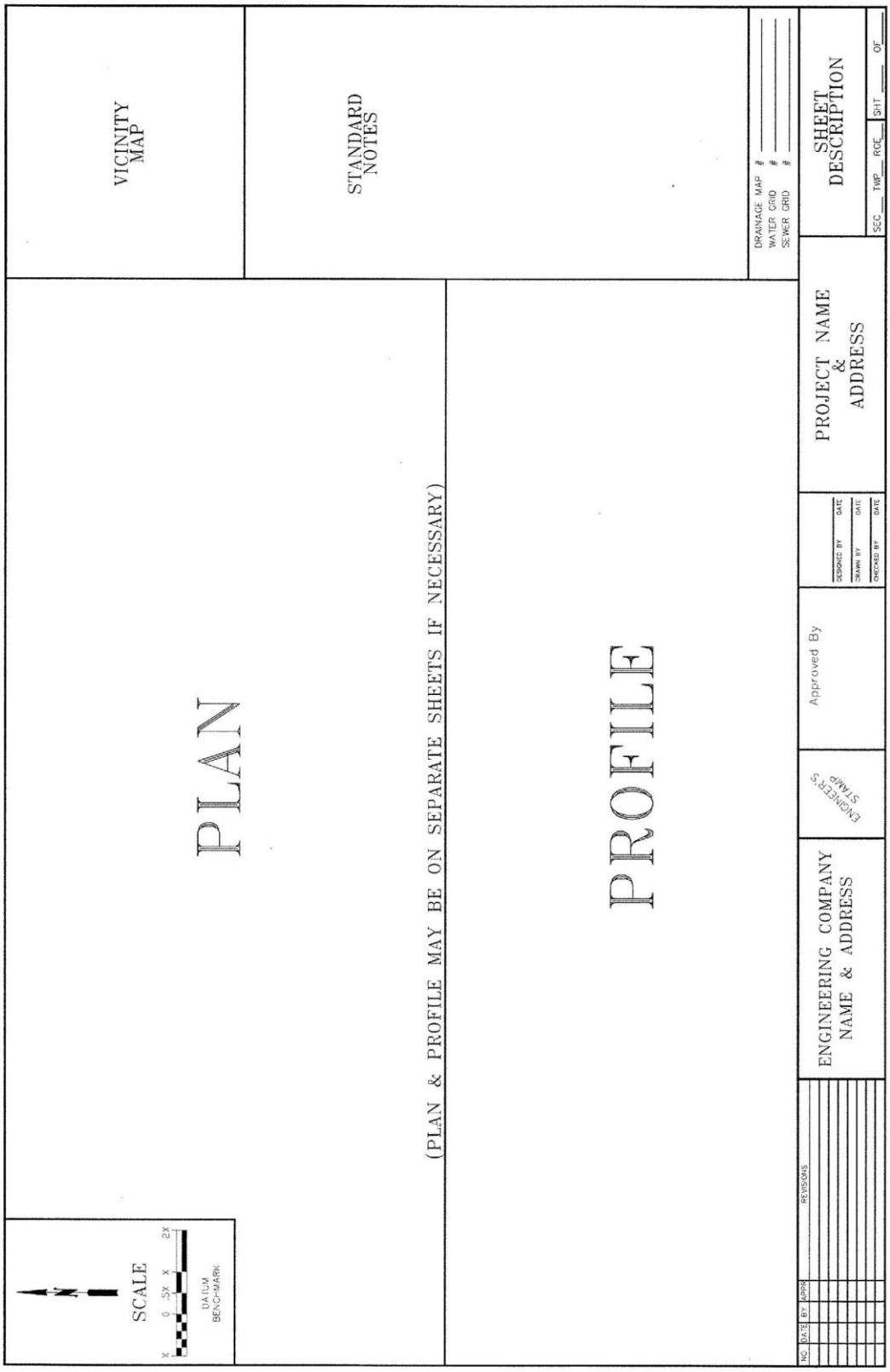
VICINITY MAP
STANDARD NOTES
DRAINAGE MAP #
WATER GRID #
SEWER GRID #
SHEET DESCRIPTION
SEC. TWP. RGE. SHT. OF
PLAN
(PLAN & PROFILE MAY BE ON SEPARATE SHEETS IF NECESSARY)
PROFILE
PROJECT NAME & ADDRESS
DESIGNED BY DATE
DRAWN BY DATE
CHECKED BY DATE
Approved By
ENGINEER'S STAMP
ENGINEERING COMPANY NAME & ADDRESS
SCALE
0 .5X X 2X
DATUM BENCHMARK
NO. DATE BY APPR. REVISIONS

APPENDIX W-4

WATER APPROVED MATERIALS LIST

The following manufacturers have been approved for use for water works construction. Where specific manufacturers are listed, no other manufacturer may be used without prior approval by the Utility.

DUCTILE IRON PIPE
All manufacturers that meet the performance requirements specified under the material section of the Standards.

DUCTILE IRON FITTINGS
All manufacturers that meet the performance requirements specified under the material section of the Standards.

GALVANIZED IRON PIPE
All manufacturers that meet the performance requirements specified under the material section of the Standards.

JOINT RESTRAINT SYSTEMS
American Ductile Iron Pipe (Flex-Ring)
EBAA Iron (MEGALUG 1100 Series)
EBAA Iron (MEGAFLANGE 2100 Series)
Griffin Pipe Products Company (Snap-Lok, Bolt-Lok)
Pacific States Cast Iron Pipe Co, (Thrust Lock)
Romac (Grip Ring), 600 Series, RomaGrip
Romac (Bell Restraint) 611 with 316SS stainless steel nuts and bolts
Star National Products (Shackle Products) - All rods and hardware shall be 316SS stainless steel.
Cooper B-Line B3132– 316SS stainless steel pipe clamps (embedded in concrete blocks)
US Pipe (TR FLEX)
Uni-Flange Corporation Series 1400, or Series 1450 with 316SS stainless steel nuts and bolts

REPAIR CLAMPS
Romac Industries, Models SS1 and SS2

COUPLINGS
Romac (400 and 501 Series), Smith-Blair (Rockwell), Mueller MaxiFit, Mueller MaxiStep

CASING (COATING FOR STEEL CASING)
Tnemec Hi-Build Tneme-Tar, Series 46H-413

CASING SPACERS

Pipeline Seal and Insulator Co.:
8" band, carbon steel with fusion-bonded coating, Model C8G-2
12" band, carbon steel with fusion-bonded coating, Model C12G-2

Cascade Waterworks Mfg. Co.:
Stainless Steel or hot-dip galvanized carbon steel Casing Spacers
(catalog number depends on size)

Advance Products & Systems, Inc.:
8" band, stainless steel, Model SSI8
12" band, stainless steel, Model SSI12
8" band, carbon steel with fusion-bonded coating, Model SI8
12" band, carbon steel with fusion-bonded coating, Model SI12

CASING END SEALS

Pipeline Seal and Insulator Co.:
Standard Pull-on (Model S)
Custom Pull-on (Model C)

Cascade Waterworks Mfg. Co.:
CCES End Seal

Advance Products & Systems, Inc.
Molded End Seal, Model AM

GATE VALVES

All manufacturers that meet the performance requirements specified under the material section of the standards.

PRV STATION

- PRESSURE REDUCING VALVES

CLA-VAL 90G-01ABCSKC }	6"	With Stainless Steel Trim on disk
CLA-VAL 90G-01ACSKC }	2"	guide, seat and cover bearing.

- STRAINERS

Cla-Val X43H}	6"	Mesh openings 0.059 inch
MUESSCO 11-BC }	2"	Stainless steel perforated screen, 1/16" diameter, 144 holes per square inch

- PRESSURE RELIEF VALVES

  CLA-VAL 50G-01KC} 2" With Stainless Steel Trim on disk guide, seat and cover bearing.

INDIVIDUAL PRESSURE REDUCING VALVES (Residential)
Wilkins 600 with built-in bypass

INDIVIDUAL PRESSURE REDUCING VALVES (Commercial)

- PRESSURE REDUCING VALVES

  Wilkins 600 HLR Series with built-in bypass

- PRESSURE RELIEF VALVES

  CLA-VAL 55F

SERVICE SADDLES

1" tap:	Ford FC101 (4" to 8" mains), epoxy-coated saddle with stainless steel strap Smith-Blair 315, epoxy-coated saddle with stainless steel strap A.Y. McDonald 4835A series, epoxy-coated saddle with stainless steel strap Romac 101NS, nylon-coated saddle with stainless steel strap
1 1/2" & 2" tap:	Ford FC202 and FCD202, epoxy-coated saddle with stainless steel strap(s) Smith-Blair 317, epoxy-coated saddle with stainless steel strap A.Y. McDonald 4845A or 4855A, epoxy-coated saddle with stainless steel strap(s) Romac 202NS, nylon-coated saddle with stainless steel strap(s)

CORPORATION STOPS

1" size:	Ford Ballcorp FB1000-4 Mueller No. P-15028 A.Y. McDonald 4701-22, 4701B-22
1 1/2" size:	Ford Ballcorp FB400-6 Mueller Oriseal No. H-9968 A.Y. McDonald 4701B-22, or 3128B (with FIPT by pack joint coupling 4754-22)
2" size:	Ford Ballcorp FB400-7 Mueller Oriseal No. H-9968 A.Y. McDonald 4701B-22, or 3128B (with FIPT by pack joint coupling 4754-22)

ANGLE METER VALVES

1 1/2" Irrigation: Ford FV13-666W
Mueller 1 2" H-14286
A.Y. McDonald 4604B

2" Irrigation: Ford FV13-777W
Mueller 2" H-14286
A.Y. McDonald 4604B

VALVE BOXES

Olympic Foundry Inc.: #VB045 Lid, Top and Base Section

RICH (VanRich Casting Corp.): Top section and lid #045 with RICH Standard Base

BUTTERFLY VALVES

All manufacturers that meet the performance requirements specified under the material section of the Standards.

AIR AND VACUUM RELEASE VALVES

APCO No. 143-C, Val-Matic No. 201C, Crispin UL10

FIRE HYDRANTS

M & H 929
Mueller Centurion (No other Mueller hydrants allowed)

BRASS WATER SERVICE FITTINGS AND VALVES

Approved manufacturers of brass fittings and valves up to 2" sizes include Ford, Mueller, James Jones Company (except James Jones meter setters, which are not approved), and A.Y. McDonald Manufacturing Co. The items supplied shall be equal to the models listed in these Standards.

METER SETTERS

1" x 1" (horizontal):
Ford V74-12W
Mueller 1" No. H-1404 x 12 with multi-purpose connection No. H-14222
A.Y. McDonald 20-412WXDD44

1" x 1" (vertical):
Ford V74-84 x 12W
A.Y. McDonald 39-412WX2D44 (inlet coupling is MIPT by pack joint, 4753-22)

1 1/2" Domestic:
Ford VBB76-12B-11-66
A.Y. McDonald 20B612WWFF665 Vertical Meter Setter with Valve Rotated 90°

2" Domestic:
Ford VBB87-12B-11-77
A.Y. McDonald 20B712WWFF775 Vertical Meter Setter with Valve Rotated 90°

METER BOXES

1" x 1" Services:	Carson Industries 1527-18 BCFXL Meter Box, and 1527 Cover with Max View Reader Door (formerly Mid-States Plastics MSBCF 1324-18) Olympic Foundry SM30
1 1/2" and 2" Domestic:	Carson Industries 1730-18 BCFXL Meter Box, and 1730 Cover with Max View Reader Door (formerly Mid-States Plastics MSBCF 1730-18) Olympic Foundry SM30
1 1/2" and 2" Irrigation:	Carson Industries 1730-18 BCFXL Meter Box, and 1730 Cover with Max View Reader Door (formerly Mid-States Plastics MSBCF 1730-18) Olympic Foundry SM-30
2” Blow-Off Assembly:	Olympic Foundry SM-30 Carson Industries 1730-18 BCFXL Meter Box, and 1730 Cover (formerly Mid-States Plastics MSBCF 1730-18)
1” Air and Vacuum Release:	Carson Industries 1730-18 BCFXL Meter Box, and 1730 Cover (formerly Mid-States Plastics MSBCF 1730-18)
Pressure Reducing Valve Assembly:	Carson Industries 1730-18 BCFXL Meter Box, and 1730 Cover (formerly Mid-States Plastics MSBCF 1730-18) Olympic Foundry SM-30

REDUCED PRESSURE BACKFLOW ASSEMBLIES
As approved on the most current Department of Health list for cross connection assemblies.

DOUBLE CHECK VALVE ASSEMBLIES
As approved on the most current Department of Health list for cross connection assemblies.

RESILIENT SEATED SHUT-OFF VALVES
All manufacturers that meet the performance requirements specified under the material section of the Standards.

NEOPRENE FOAM PAD (FOR CUSHION BETWEEN ADJACENT PIPES)
DOW Plastics Ethafoam^{tm} 220

LADDER-UP
Bilco, Model LU-2 (steel safety post, hot dip galvanized)

VAULT HATCH/DOOR AND NON-SLIP TREATMENT
L.W. Products Company, Inc., Models HHD and HHS (rated for H-30 Vehicle Loading)
Hatches shall include recessed padlock hasp sized to accept City of Bellevue Water Division padlocks.

Metal lids, hatches and access covers shall be constructed with a gray non-slip treatment by one of the approved products below:

Manufacturer	*COF	Product
LW Products	.95	Thermion Arc Metal Spray
SlipNOT Metal Safety Flooring	.99	SlipNOT Grip Plate
IKG Industries	>.80	MEBAC 1 (Metal Bonded Anti-Slip Coatings)
Grating Pacific LLC	.92	ALGRIP Safety Floor Plates

*COF – coefficient of friction as determined by ASTM C1028-89

LINK SEAL
Vault wall pipe penetration seals shall be Link Seal Model C-316 (EDPM) with stainless steel hardware.

EXPANSION ANCHOR BOLTS INTO CONCRETE
Expansion anchor bolts shall be wedge style “Power Stud”, “Power Bolt” Hilti KB3-HPG in stainless steel or galvanized steel.

APPENDIX W-5

WATER WORKS REFERENCE STANDARDS

1. STANDARDS FOR UTILITIES INSTALLED IN PROXIMITY OF SEATTLE PUBLIC UTILITIES TRANSMISSION PIPELINES ..... A(W5-1)

Standards for Utilities Installed in Proximity of Seattle Public Utilities Transmission Pipelines:

Seattle Public Utilities (SPU) operates several major water transmission pipelines within King County. These pipelines supply nearly all the domestic water to the communities in western King County. In some cases these pipelines are located within SPU's fee-owned right of way, within easements on private property or within the city streets, county road or state highways.

Vibrations, heavy loads, and other construction activities can damage these pipelines. If a pipeline is damaged there could be substantial collateral damage. For this reason SPU needs to review plans and apply standard pipe protection procedures for any project in close proximity to, or that will cross these pipelines.

In order to review any such project SPU will need:

- 3 copies of scalable plans that show the proposed improvements as they are located in relation to SPU facilities or electronic plans in pdf format.
- Names, addresses, and telephone numbers for the appropriate contact persons of the entity(ies) responsible for the work, including a contact person whom can be reached 24 hours a day.
- SPU's Record Plans can be obtained from the City of Seattle Vault which is located at 47th floor of the City of Seattle Municipal Tower, 700 5th Ave., Seattle, 98124. Phone: 206-684-5132.
  http://www.seattle.gov/util/Engineering/Records_Vault/Hours_&_Location/COS_001833.asp

SPU's General Design Requirements:

- When crossing SPU's pipelines the installed "facility" should be at a right angle to SPU's pipeline or parallel with the centerline of a controlling road.
- When crossing SPU's pipelines the vertical separation between the installed facility and SPU's pipelines should be 18 inches for a sewer line and 12 inches for all other facilities over the pipelines. The separation should be a minimum of 24 inches for all facilities installed under the pipelines.
- When crossing SPU's pipelines with a water or sewer main of ductile iron pipe (d.i.p.), one (19 to 20 foot) section must be centered on SPU's pipeline so that the section joints are not over or under any portion of SPU's pipeline. The joints must be pressurized and tested for leaks.
- When crossing SPU's pipelines, if the installed facility is not made of ductile iron pipe, the facility must be installed in a steel casing with walls at least 1/4 inch thick.
- When crossing SPU’s pipelines if the facility is installed within SPU fee-owned right-of-way, the steel casing must be installed the entire width of the right of way. If the facility is installed within a street right of way, the steel casing must extend at least 10 feet on each side of the pipeline.
- SPU's pipelines are set in a bed of pea gravel. Construction must be performed in a manner that will not allow the pea gravel to escape from under the pipeline.

- Construction methods must be employed to support the pipeline during excavation.
- "Trenchless" construction methods must be approved on a site by site basis due to the high probability of substantial collateral damage if one of SPU's pipelines is damaged.
- Cathodic pipe protection methods may be required.
- For parallel installations, SPU would like 10 feet of separation on each side of its pipelines.
- Shallow curb inlets can be closer than 10 feet if ductile iron is used and the drain line diverts the water to a catch basin at a remote location.
- Special protections or bridging methods may be required to protect the pipeline due to the width and/or depth of trenching in the vicinity of SPU pipelines.
- If SPU's pipeline is exposed, SPU wants to inspect the pipe prior to back filling.
- Special fill and/or compaction may be required depending on the method and depth of excavation.
- Overhead wire installations typically require a minimum of 25 feet of vertical clearance from the ground.
- Vibrations could damage some of SPU's pipelines; therefore pile driving, blasting and other vibration producing work may be restricted.
- Heavy loads could damage some of SPU's pipelines. Therefore pipe protection may be necessary if heavy equipment crosses the pipe. Typical protection would include temporary bridging using timbers and steel plate.

SPU Operations requirements:

- Notify SPU at least 48 hours notice prior to construction. Locating SPU's pipeline by potholing must be supervised. Call SPU's Lake Youngs Operations at 206-684-3933.
- Any work in close proximity to SPU's pipeline (including locating by potholing) must be supervised by SPU. Call SPU's Lake Youngs Headquarters at 206-684-3933 at least 48 hours in advance.

Questions:

Teri Hallauer
Sr. Real Property Agent
206-684-5971
Fax: 206-615-1215
teri.hallauer@seattle.gov

Audrey Hansen
Manager, Real Estate Services
206-684-5877

Seattle Public Utilities Real Estate Services
Seattle Municipal Tower
700 Fifth Avenue, Suite 4900
P.O. Box 34018
Seattle, WA 98124-4018

05/01/09