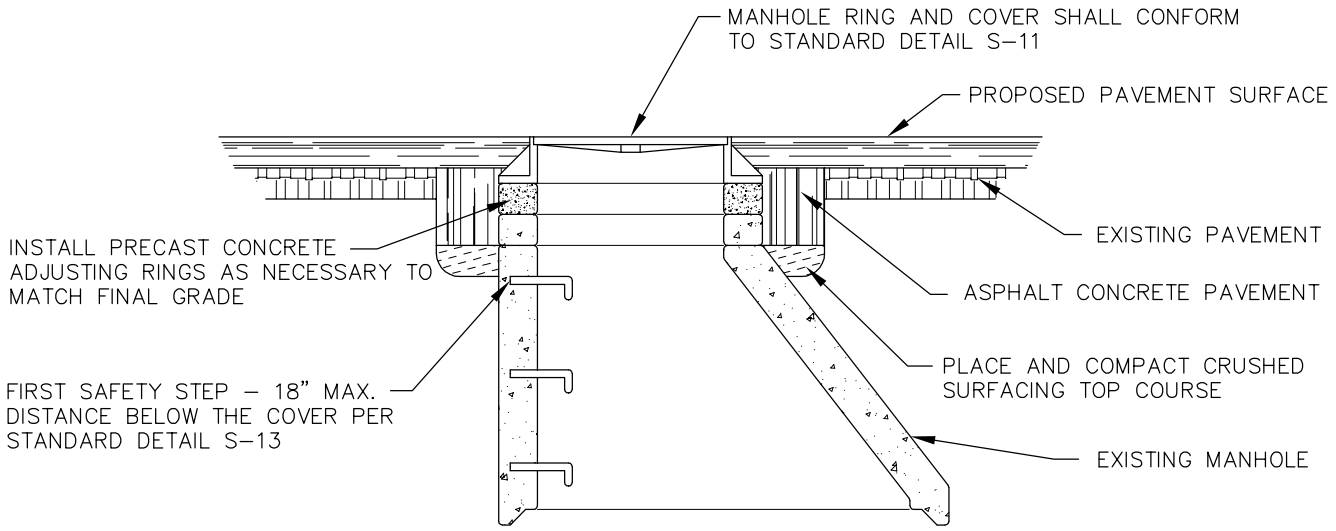

PAVED AREAS

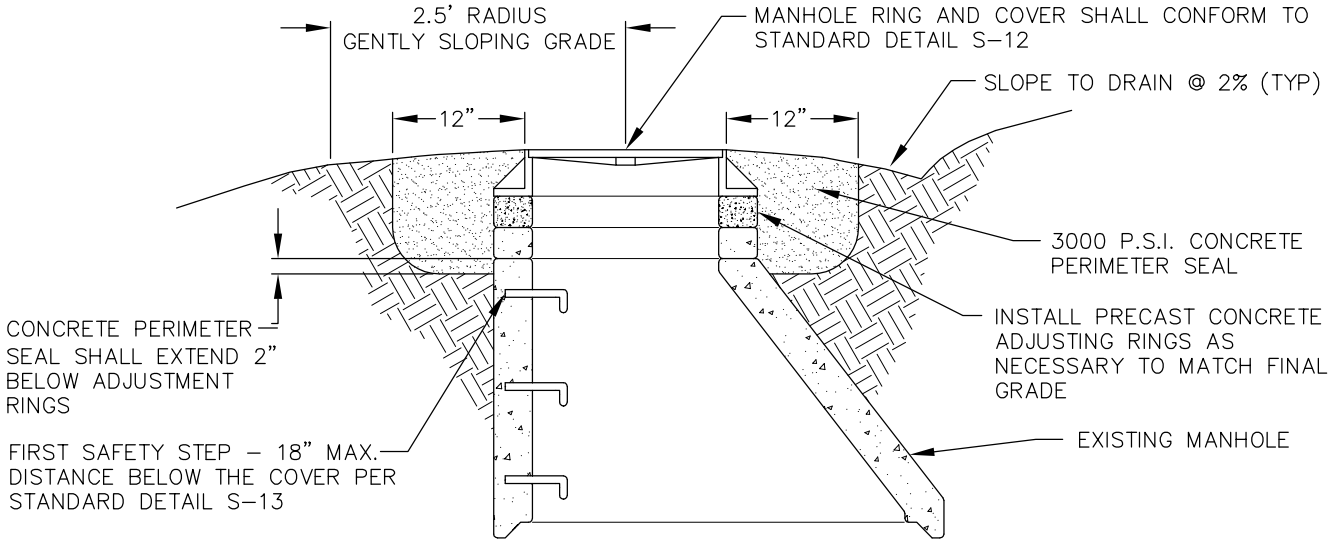

UNPAVED AREAS

NOTES:

1. 3/4" OF NON–SHRINK GROUT SHALL BE PLACED BETWEEN EACH LEVEL OF THE ADJUSTING RINGS, INCLUDING THE TOP OF THE CONE SECTION AND THE BOTTOM OF THE IRON RING.
2. GROUT INSIDE AND OUTSIDE OF THE MANHOLE NECK TO ACHIEVE WATERTIGHT CONSTRUCTION. FINISH SMOOTH THE INSIDE OF THE NECK. USE NON–SHRINK GROUT ONLY.
3. PRECAST ADJUSTING RINGS MUST BE CAST WITH GROOVES TO ALLOW FIELD INSTALLATION OF SAFETY STEPS.
4. SAFETY STEPS SHALL BE ADDED AS NEEDED.
5. REPLACE EXISTING RING AND COVER IF NON–CONFORMING OR WORN.
6. LOCKING RING AND COVERS ARE REQUIRED IN ALL UNPAVED AREAS AND EASEMENTS. LOCKING RING AND COVER SHALL CONFORM TO STANDARD DETAIL S–12.

City of Bellevue

SEWER UTILITIES

TITLE

MANHOLE GRADE ADJUSTMENT

JANUARY 2013

NO SCALE

NO. S–8