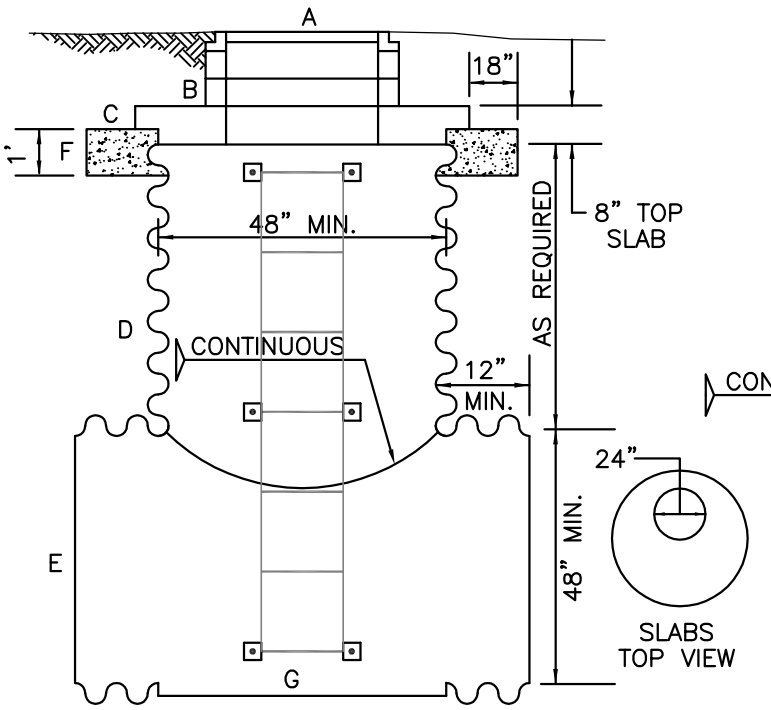

CONCENTRIC ELEVATION

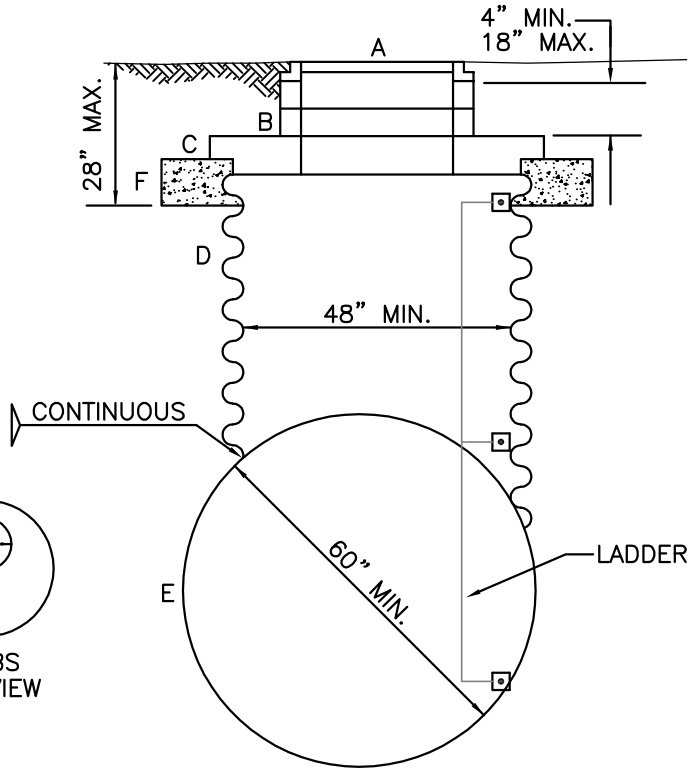

ECCENTRIC SECTION

LEGEND

A BOLT LOCKING MANHOLE RING AND COVER PER DETAIL D–22.

B CONCRETE GRADE RINGS AS NEEDED TO MATCH FINISHED GRADE PER DETAIL D–23.

C CONCRETE TOP SLAB FOR TYPE 2 CATCH BASIN, BEARS ON CONCRETE COLLAR.

D CMP RISER: 10 GAUGE HELICAL OR ANNULAR CORRUGATED METAL PIPE, DIAMETER TO MATCH DETENTION PIPE.

E CORRUGATED METAL STUBS AND DETENTION PIPE TO BE SAME GAUGE. STUB LENGTHS TO BE 12" MIN.

F CONCRETE COLLAR CL 3000.

G STEEL BOTTOM: 8 GAUGE BOTTOM PLATE WELDED TO RISER

NOTES:

1. ALL METAL PARTS AND SURFACES MUST BE MADE OF CORROSION RESISTANT MATERIAL. PIPES SHALL BE ASPHALT COATED TREATMENT #1, GALVANIZED STEEL OR ALUMINIZED STEEL.
2. NOT FOR USE IN ROADWAYS, DRIVEWAYS, AND OTHER VEHICULAR TRAFFIC AREAS.
3. FOR USE IN DETENTION PIPES ONLY.
4. APPLY NON–SHRINK GROUT TO INSIDE AND OUTSIDE OF ALL JOINTS, RISERS, RINGS, AND FRAMES.

City of Bellevue

STORM AND SURFACE WATER UTILITY

TITLE

CORRUGATED METAL MANHOLE

JANUARY 2013

NO SCALE

NO. D–24