NOTICE: OUTSIDE-INSTALLED RPBA IS NOT ALLOWED IN BURIED VAULTS. DEVELOPER SHALL PROVIDE UTILITIES WITH A DESIGN FOR AN ABOVE-GROUND ENCLOSURE THAT DRAINS TO DAY LIGHT FOR APPROVAL. CLEARANCES SHOWN BELOW SHALL APPLY TO THE ENCLOSURE. THE BURIED VAULT DETAIL SHOWN BELOW IS ONLY ALLOWED WHEN GIVEN SPECIAL APPROVAL BY THE CITY.

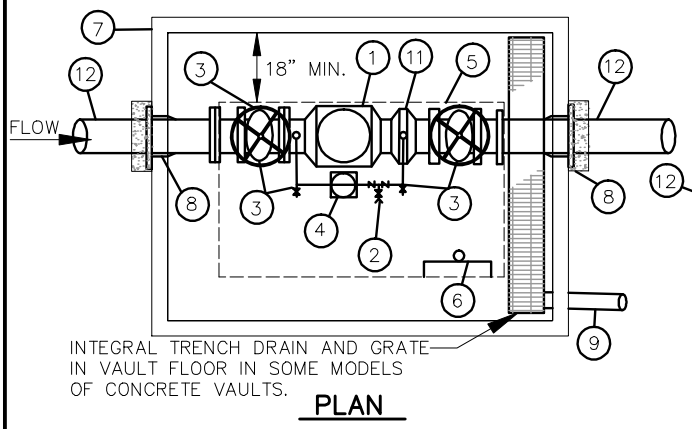

PLAN

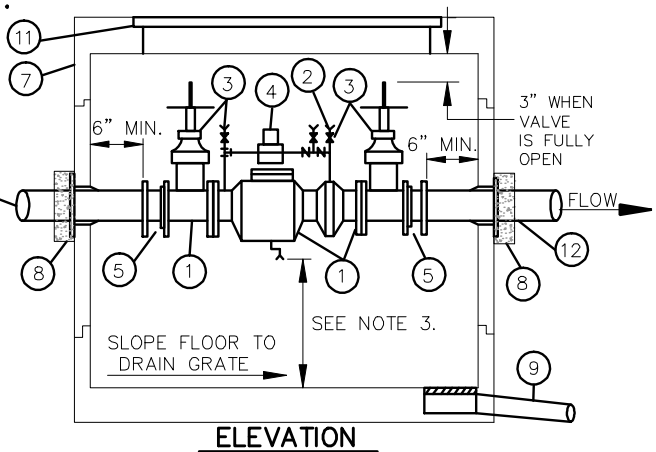

ELEVATION

1. STATE APPROVED REDUCED PRESSURE PRINCIPLE BACKFLOW ASSEMBLY, COMPLETE WITH (2) RESILIENT SEATED O.S.&Y. GATE VALVES AND (4) RESILIENT SEATED TEST COCKS, AND BRASS OR COPPER DETECTOR BY-PASS, CENTERED IN VAULT.
2. STATE APPROVED 3/4" REDUCED PRESSURE PRINCIPLE ASSEMBLY ON BY-PASS, COMPLETE WITH (2) RESILIENT SEATED BALL VALVES AND (4) RESILIENT SEATED TEST COCKS.
3. EACH VALVE SHALL BE MARKED WITH MODEL NUMBER WITH DESIGNATION OF RESILIENT SEAT: SUCH AS "RS OR "R", WHICH MUST BE CAST, MOLDED, OR AFFIXED ONTO THE BODY OR BONNET OF THE VALVE. ALL FERROUS BODIED VALVES SHALL BE COATED WITH A MIN. OF 4mils d.f.t. EPOXY OR EQUIVALENT POLYMERIZED COATING.
4. 3/4" METER (CUBIC FEET READING) AS REQUIRED.
5. MEGAFLANGE
6. ONE GALVANIZED STEEL LADDER TO BE SECURED TO VAULT WITH LADDER-UP (BILCO MODEL LU-2). LADDER TO BE ATTACHED TO VAULT PER STANDARD DETAIL W-19.
7. CONCRETE VAULT WITH 2 LOCKING ALUMINUM LW HATCH DOORS (PART NO. HHD-42"x72") RATED FOR H-30 LOADING WITH SLIP RESISTANT TREATMENT PER SECTION W4-17 OF THE ENGINEERING STANDARDS. COVER TO READ "WATER". VAULT SHALL BE EQUAL TO UTILITY VAULT CO. MODEL LISTED IN TABLE BELOW.
8. WATER TIGHT GROUT. RESTRAIN INLET/OUTLET PIPE WITH MEGALUG MID-SPAN RESTRAINT AND THRUST BLOCK ADJACENT TO VAULT SEE STANDARD DETAIL W-56.
9. DRAIN, SLOPE TO DAYLIGHT WITH BORE SIGHTED DAYLIGHT DRAIN CLEARLY VISIBLE END TO END WITH STRAIGHT PIPE, SIZED TO MEET FLOW REQUIREMENTS OF RPBA RELIEF VENT. INSTALL WIRE MESH RODENT SCREEN OVER DRAIN OUTLET.
10. TWO ADJUSTABLE PIPE STANCHIONS, BOLTED TO FLOOR.
11. ACCESS TO BE CENTERED OVER ASSEMBLY.
12. CL. 52 D.I., PExFL WITH RETAINER GLANDS.
13. VALVE SUPERVISORY SWITCH, SPDT, PER FIRE DEPARTMENT REQUIREMENTS.

SIZE	MIN. VAULT SIZE (INSIDE) W	L	H	UTIL. VAULT CO. MODEL	UTIL. VAULT CO. COVER *
3"	4'-9"	4'-8"	3'-11"	675-WA	675-2-332P
4"	5'-0"	5'-3"	4'-7"	675-WA	675-2-332P
6"	5'-1"	6'-6"	5'-5"	676-WA	676-2-332P
8"	5'-9"	7'-7"	7'-1"	687-LA	687-TL-2-332
10"	5'-10"	8'-8"	8'-0"	612-2X	612-3-332P

* COVER MODIFIED PER NOTE 7.

NOTES:

1. DAYLIGHT DRAIN MUST BE ABLE TO BE LINE SIGHTED, INSTALLED ABOVE MAXIMUM FLOOD LEVEL, AND BE ABLE TO HANDLE THE VOLUME OF WATER THAT CAN BE DISCHARGED FROM THE RELIEF VALVE PORT.
2. WHEN THE REDUCED PRESSURE ASSEMBLY IS LOCATED INSIDE A BUILDING A SIZED DRAIN LINE SHALL BE PROVIDED FOR RELIEF PORT. THERE MUST BE AN APPROVED AIR GAP BETWEEN THE RELIEF PORT AND DRAIN.
3. ALLOW 12"+ NOMINAL DIAMETER OF ASSEMBLY CLEARANCE BELOW RELIEF PORT FOR REPAIR. ALSO PROVIDE 12MIN. AIR GAP CLEARANCE FROM TOP OF DRAIN PIPE.
4. REDUCED PRESSURE PRINCIPLE BACKFLOW ASSEMBLY WILL BE ALLOWED TO BE INSTALLED IN VAULTS ONLY IN CASES WHERE NO OTHER MEANS OF INSTALLATION IS AVAILABLE AND AS APPROVED BY A CITY OF BELLEVUE WATER QUALITY TECHNICIAN.
5. TESTING IS REQUIRED BY A WASHINGTON STATE DEPARTMENT OF HEALTH CERTIFIED BACKFLOW ASSEMBLY TESTER UPON INSTALLATION AND ANNUALLY THEREAFTER. ASSEMBLY TO BE MAINTAINED BY OWNER.
6. MINIMUM CLEARANCE BETWEEN ASSEMBLY AND WALL ON LADDER SIDE OF VAULT IS 24". MINIMUM CLEARANCE FROM OPPOSITE WALL 12". ALL CLEARANCES SHOWN ARE MINIMUM.
7. VAULTS SHALL NOT BE INSTALLED IN AREAS WITH VEHICULAR TRAFFIC.
8. TEE AND GATE VALVES REQUIRED ON MAIN.
9. IN CENTRAL BUSINESS DISTRICT, 3" THROUGH 6" ASSEMBLIES SHALL CONNECT TO WATER MAIN WITH 8" PIPE.
10. FDC TO BE LOCATED DOWNSTREAM OF RPBA. FDC LINE AND CHECK VALVE MAY BE ROUTED INSIDE THE RPBA VAULT PROVIDED ALL PROVISIONS OF STANDARD DETAIL W-48 ARE MET.
11. MINIMUM 2' OF LEVEL, UNOBSTRUCTED AREA AROUND HATCHES.
12. SECURE A VALVE MARKER, PER DETAIL W-55, TO EACH GATE VALVE HANDLE.
13. LONGER VALVE ASSEMBLIES MAY REQUIRE A LARGER VAULT TO MEET THE REQUIRED CLEARANCES. SUBMIT FOR APPROVAL.
14. RPBA INSTALLATIONS THAT DIFFER FROM THE STANDARD DETAIL MUST BE APPROVED BY THE CROSS CONNECTION PROGRAM ADMINISTRATOR (425-452-5208) AND WILL BE REVIEWED ON A CASE-BY-CASE BASIS TO ENSURE THEY MEET CURRENT MINIMUM REQUIREMENTS FOR INSTALLATION AND FREEZE PROTECTION.

JANUARY 2012 NO SCALE

City of Bellevue

WATER UTILITY

TITLE 3" TO 10" REDUCED PRESSURE DETECTOR ASSEMBLY FOR FIRE SPRINKLER SYSTEMS (OUTSIDE INSTALLATION)

NO. W-47