VERTICAL BLOCKING FOR 11 1/4°–22 1/2°–30° BENDS					
PIPE SIZE	V B	CU FT	A	D	L
4"	11 1/4°	8	2.0'	3/4"	1.5'
	22 1/2°	11	2.2'		2.0'
	30°	17	2.6'		
6"	11 1/4°	11	2.2'	3/4"	2.0'
	22 1/2°	25	2.9'		
	30°	41	3.5'		
8"	11 1/4°	16	2.5'	3/4"	2.0'
	22 1/2°	47	3.6'		
	30°	70	4.1'	3/4"	2.5'
12"	11 1/4°	32	3.2'	3/4"	2.0'
	22 1/2°	88	4.5'	7/8"	3.0'
	30°	132	5.1'		
16"	11 1/4°	70	4.1'	7/8"	3.0'
	22 1/2°	184	5.7'	1 1/8"	4.0'
	30°	275	6.5'	1 1/4"	
20"	11 1/4°	91	4.5'	7/8"	3.0'
	22 1/2°	225	6.1'	1 1/4"	4.0'
	30°	330	6.9'	1 3/8"	4.5'
24"	11 1/4°	128	5.0'	1"	3.5'
	22 1/2°	320	6.8'	1 3/8"	4.5'
	30°	480	7.9'	1 5/8"	5.5'
VERTICAL BLOCKING FOR 45° BENDS					
4"	45°	30	3.1'	3/4"	2.0'
6"		68	4.1'		
8"		123	5.0'		
12"		232	6.1'	3/4"	2.5'
16"		478	7.8'	1 1/8"	4.0'
20"		560	8.2'	1 1/4"	
24"		820	9.4'	1 3/8"	4.5'

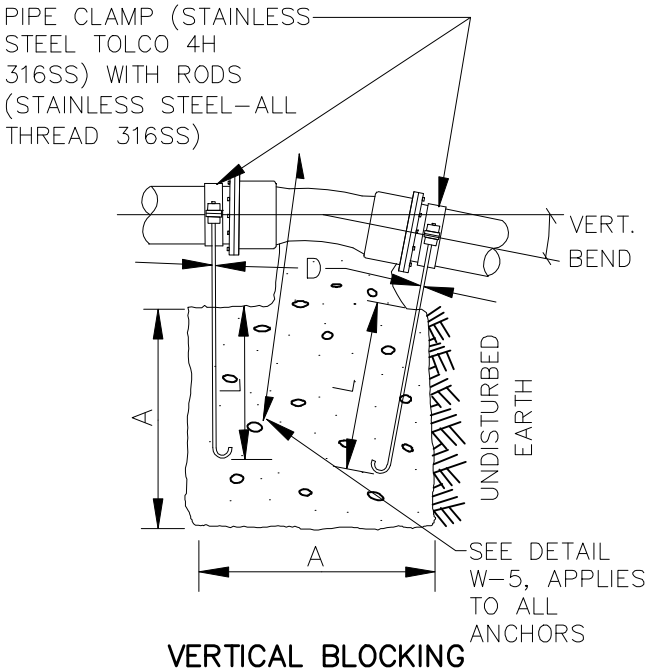

VERTICAL BLOCKING FOR 11 1/4°, 22 1/2°, & 30° BENDS

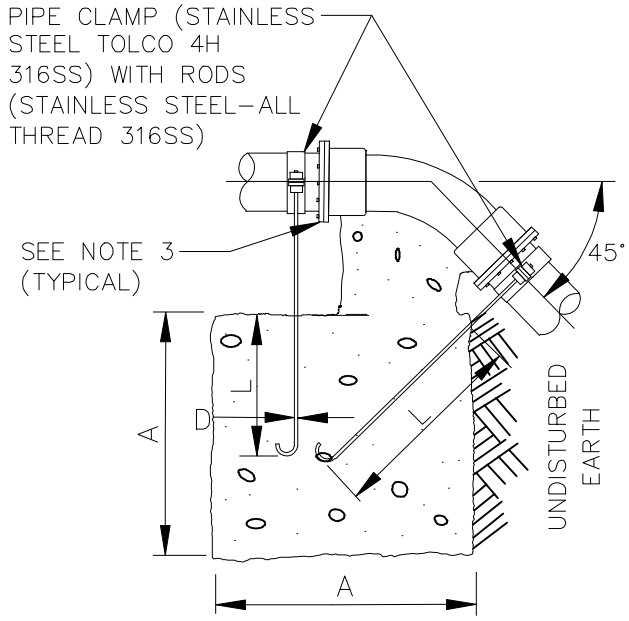

VERTICAL BLOCKING FOR 45° BENDS

NOTES:

1. CONCRETE BLOCKING BASED ON 200 PSI PRESSURE AND 2500 PSI CONCRETE.
2. LEAVE BLOCK OPEN OR SHEETED 24 HOURS MINIMUM.
3. MEGA–LUG FITTINGS.

JANUARY 2011 **NO SCALE**

City of Bellevue

VERTICAL BLOCKING FOR CONNECTING TO EXISTING MAIN

NO. **W–3**