City of Bellevue Post Office Box 90012 •Bellevue, Washington • 98009 9012

Date: **December 22, 2003**

From: **Wes Jorgenson**
Assistant Director for Engineering
City of Bellevue Utilities

Subject: Utilities Engineering Standards Update

Effective immediately, the following amendments are made to the City of Bellevue Utilities Engineering Standards, last updated September 15, 1998.

These revisions incorporate sections of the Utilities Code removed by the 2003 Utilities Code Update and changes to the standards related to commercial and multi-family on-site drainage facilities (expect for requirements for runoff control and runoff treatment, which do not change).

Under SANITARY SEWER ENGINEERING STANDARDS:

Under S3-02 GENERAL DESIGN STANDARDS, add

I. Electrical Service Grounding. Side sewers and sewer mains shall not be used for grounding of electrical systems or for the maintenance, integrity or continuity of any grounding attachment or connection.

Under S6-15 SIDE SEWER DEMOLITION, replace existing text with

Any property owner who plans to demolish or remove any structure connected to the public sewer system shall notify the utility and complete a utility abandonment form prior to the commencement of such work.

Side sewer demolition shall be performed prior to removal of building foundation. The side sewer for each building shall be excavated and removed from the building connection to the property line or the main as specified by the Utility. The property owner shall cap the end of the side sewer to remain in place. Side sewer demolition shall be performed in the presence of the City of Bellevue Wastewater Maintenance Engineering Technician (inspector). The inspector will inspect the stub to determine whether the side sewer can be re-used. If the inspector determines that the side sewer cannot be re-used, the property owner shall either abandon the side sewer or upgrade the side sewer through a side sewer permit or through a sewer system extension agreement.

Under WATER ENGINEERING STANDARDS:

Under W3-02 GENERAL DESIGN STANDARDS, add

O. Electrical Service Grounding. Service connections or water utility distribution system piping shall not be used for grounding of electrical systems or for the maintenance, integrity or continuity of any grounding attachment or connection.

Under W3-08 CONNECTIONS TO EXISTING SYSTEM, add

G. Any property owner who plans to demolish or remove any structure connected to the public water system shall notify the utility and complete a utility abandonment form prior to the commencement of such work. The utility will determine whether the water service can be re-used (if sufficiently sized for the new use). If the inspector determines that the water service cannot be reused, the property owner must pay for abandonment or upgrade of the water service through a water service application or through a water system extension agreement for new site improvements.

Under W3-10 SERVICES, add

H. Water services shall be sized in accordance with the Uniform Plumbing Code. Combination domestic/fire services shall be sized to meet the greater of the two demands, subject to approval by the fire marshal and, for projects within the Bellevue city limits, the department of community development.

Under W3-13 IRRIGATION SYSTEM DESIGN AND PERFORMANCE REQUIREMENTS, replace the first paragraph with the following

New or re-developed irrigation systems shall comply with the following Irrigation System Design Requirements.

A. Applicability. The requirements of this section shall apply to all proposed new irrigation systems that will be connected to the public water system, except that the requirements do not apply to the following:

1. Single-family residences; provided, that community area landscaping installed by the developer is not exempt.

2. Any project with a total landscaped area of less than 500 square feet. If a project is phased, the total landscape area includes all phases.

B. Location Restrictions.

1. Only low-volume irrigation systems may be installed in landscape strips less than five feet wide or in any parking lot landscape.

2. Irrigation systems shall not be installed in turf strips less than five feet wide; in areas of turf where slopes exceed 3:1; in landscape berms exceeding a slope of 1:1; or in turf areas in right-of-way medians, curb strips or parking lots, with the exception that in right-of-way medians and curb strips, up to five percent of the landscape may be irrigated turf so long as all other requirements are met and the turf provides a functional use for pedestrians.

C. Design and Installation Certification. Irrigation systems shall: be designed by a state-registered landscape architect, state-licensed professional engineer, or Irrigation Association certified irrigation designer (IACID); pass an audit by an Irrigation Association certified landscape irrigation auditor (IACLIA); and be certified as being designed, installed and operating at a minimum average distribution uniformity of 0.625 or greater.

D. Manual Watering. Manual watering is permitted provided it meets the intent of the irrigation system requirements and overspray is minimized.

Under SURFACE WATER ENGINEERING STANDARDS:

Under D4-04.8 Private Drainage Systems, replace all text in this section with the following

D4-04.8(1) Private Single Family Drainage Systems

A. General

Private drainage systems for single family lots shall comply with all criteria for stormwater systems set forth herein unless specifically exempted.

In areas having an existing piped conveyance system, the stormwater outfalls for parking lot, driveway, and roadway drainage shall be made by the following (in order of preference):

(1) Connecting the conveyance pipeline to an existing manhole or catch basin; or

(2) Constructing a new manhole or catch basin on the existing storm drainage pipeline and connecting the conveyance pipeline to this new structure.

In areas having an existing piped conveyance system, the stormwater outfalls for roof, footing, and yard drains may be made by the two methods mentioned above or by the following (in order of preference):

(1) Connecting the private drainage pipe to an existing storm drain manhole, catch basin or stub-out if provided within 100 feet and downslope of the property line; or

(2) Coring the abutting conveyance pipeline and installing a saddle tee and providing a clean-out outside of the public right-of-way; or

(3) Coring the abutting profile wall conveyance pipeline (PVC or corrugated polyethylene only; CMP may not be blind tapped) and installing an insert tee and clean-out outside of the right-of-way; or

(4) Installing a tee fitting in the abutting conveyance pipeline and providing a clean-out outside of the public right-of-way; or

(5) Connecting the private drainage pipe to an existing sidewalk drain; or

(6) Providing a new sidewalk drain if the closest existing drainage system or stub-out is greater than 100 feet and downslope of the property line.

(7) Outfalling to an open channel or stream, provided that the drainage path continues downstream to an established, known and well-functioning conveyance system, adequate erosion protection is provided and permits from other agencies are obtained, as needed.

When a project includes the construction of a drainage system, private drainage systems shall connect to the proposed storm drain manholes, catch basins, stub-outs, or tees. The use of sidewalk drains shall not be permitted.

In areas without an existing drainage system, the private drainage system shall discharge in accordance with Section D4-02 (Discharge Locations) herein.

B. Roof, Footing, and Yard Drains

Roof and footing drain pipes shall be separate lines which may only be joined as a non-perforated pipeline at an elevation at least one (1) foot below the lowest footing drain invert elevation. The minimum cover over the storm drain stub at the property line shall be two (2) feet.

Clean-outs (4-inch minimum diameter) with factory manufactured fittings, shall be provided at all junctions and bends greater than 45 degrees. The maximum spacing between clean-outs shall not exceed 100 feet.

Roof, footing and yard drains shall not be connected to the sanitary sewer system.

Roof, footing and yard drains shall not be located within the public right-of-way except where connecting to the municipal drainage system.

Roof, footing and yard drain systems serving more than one parcel shall be within private utility easements.

Roof, footing, and yard drainage may be conveyed over steep banks in single wall, corrugated polyethylene tubing (CPT) provided:

- the overbank drain is privately owned and maintained;
- the minimum tubing slope is 15% or greater;
- the CPT is continuous and without joints from the top of the slope to the toe;
- the CPT is a minimum of 4 inches and a maximum of 6 inches in diameter;
- a yard drain or clean-out is placed at the top of the slope;
- the overbank drain is buried with a maximum cover of 1 foot.

CPT may not be used in the right-of-way, or for any other purpose except as a privately owned and maintained overbank drain.

C. Maintenance

Roof, footing, and yard drainage systems, drainage systems on commercial and multi-family properties, drainage facilities within private easements, and drainage facilities otherwise denoted as

private, shall be designed to provide access for maintenance and operation by the owners of such facilities.

D4-04.8 (2) Private Commercial and Multi-family Drainage Systems

A. General

In areas having an existing piped conveyance system, the stormwater outfalls for parking lot, driveway, and roadway drainage shall be made by the following (in order of preference):

(1) Connecting the conveyance pipeline to an existing manhole or catch basin; or

(2) Constructing a new manhole or catch basin on the existing storm drainage pipeline and connecting the conveyance pipeline to this new structure.

In areas having an existing piped conveyance system, the stormwater outfalls for roof, footing, and yard drains may be made by the two methods mentioned above or by the following (in order of preference):

(1) Connecting the private drainage pipe to an existing storm drain manhole, catch basin or stub-out if provided within 100 feet and downslope of the property line; or

(2) Coring the abutting conveyance pipeline and installing a saddle tee and providing a clean-out outside of the public right-of-way; or

(3) Coring the abutting profile wall conveyance pipeline (PVC or corrugated polyethylene only; CMP may not be blind tapped) and installing an insert tee and clean-out outside of the right-of-way; or

(4) Installing a tee fitting in the abutting conveyance pipeline and providing a clean-out outside of the public right-of-way; or

(5) Connecting the private drainage pipe to an existing sidewalk drain; or

(6) Providing a new sidewalk drain if the closest existing drainage system or stub-out is greater than 100 feet and downslope of the property line.

(7) Outfalling to an open channel or stream, provided that the drainage path continues downstream to an established, known and well-functioning conveyance system, adequate erosion protection is provided and permits from other agencies are obtained, as needed.

When a project includes the construction of a drainage system, private drainage systems shall connect to the proposed storm drain manholes, catch basins, stub-outs, or tees. The use of sidewalk drains shall not be permitted.

In areas without an existing drainage system, the private drainage system shall discharge in accordance with Section D4-02 (Discharge Locations) herein.

B. Runoff Control and Runoff Treatment Facilities

Runoff Control and Runoff Treatment Facilities shall comply with all criteria for stormwater systems set forth herein unless specifically exempted.

C. Other Onsite Drainage Facilities

Drainage facilities for commercial and multi-family properties shall comply with all criteria for stormwater systems set forth herein, however, they are exempt from sections D4-04, D4-05, D7-02, D7-03, D8-04, D8-05 and Appendix D-1 Standard Details, except for any portions within these sections that relate to Runoff Control and/or Runoff Treatment Facilities.

Other on-site private drainage facilities shall be designed by a professional engineer licensed by the State of Washington to meet City Storm & Surface Water Utility Codes using industry standards and practices.

D. Maintenance

Drainage systems on commercial and multi-family properties, drainage facilities within private easements, and drainage facilities otherwise denoted as private, shall be designed to provide access for maintenance and operation by the owners of such facilities.

Under D8-08 ABANDONING FACILITIES, add

D8-08.3 Demolition or Removal of Structures

Any property owner who plans to demolish or remove any structure connected to the public drainage system shall:

A. Notify the utility and complete a utility abandonment form prior to commencement of such work; and

B. Verify the location of the existing on-site drainage facilities; and

C. Cap, as necessary, connections that are no longer needed.

UTILITIES DEPARTMENT

WATER ENGINEERING STANDARDS

AUGUST 1998

WATER ENGINEERING STANDARDS

TABLE OF CONTENTS

CHAPTER W1 - GENERAL REQUIREMENTS

W1-01 GENERAL ..... W1 - 1

W1-02 DEFINITIONS ..... W1 - 1

W1-03 REFERENCES ..... W1 - 4

W1-04 GOVERNMENTAL AGENCY REQUIREMENTS ..... W1 - 4

CHAPTER W2 - PLAN SUBMITTAL

W2-01 GENERAL ..... W2 - 1

W2-02 DEVIATIONS ..... W2 - 1

W2-03 ERRORS AND OMISSIONS ..... W2 - 1

W2-04 PLANS ..... W2 - 2

CHAPTER W3 - WATER PLANNING/DESIGN STANDARDS

W3-01 PLANNING CRITERIA ..... W3 - 1

W3-02 GENERAL DESIGN STANDARDS ..... W3 - 2

W3-03 VALVING ..... W3 - 4

W3-04 FIRE HYDRANTS ..... W3 - 5

W3-05 PIPE CLASS / PROTECTION / COVER ..... W3 - 5

W3-06 CLEARANCES / OTHER UTILITIES ..... W3 - 7

W3-07 SLOPES ..... W3 - 8

W3-08 CONNECTIONS TO EXISTING SYSTEM ..... W3 - 8
W3-09 EASEMENTS ..... W3 - 9

W3-10 SERVICES ..... W3 - 9

W3-11 BACKFLOW PREVENTION ..... W3 - 10

W3-12 LANDSCAPE WATER BUDGETING REQUIREMENTS ..... W3 - 11

W3-13 IRRIGATION SYSTEM DESIGN AND PERFORMANCE REQUIREMENTS ..... W3 - 18

CHAPTER W4 - WATER MATERIALS

W4-01 GENERAL ..... W4 - 1

W4-02 WATER PIPE ..... W4 - 1

W4-03 POLYETHYLENE ENCASEMENT ..... W4 - 1

W4-04 FITTINGS ..... W4 - 2

W4-05 GALVANIZED IRON PIPE ..... W4 - 2

W4-06 COUPLINGS ..... W4 - 2

W4-07 ADAPTERS ..... W4 - 3

W4-08 BOLTS IN PIPING ..... W4 - 3

W4-09 FLANGE GASKETS ..... W4 - 3

W4-10 GATE VALVE ..... W4 - 3

W4-11 VALVE BOX ..... W4 - 3

W4-12 VALVE OPERATING NUT EXTENSION ..... W4 - 4

W4-13 BUTTERFLY VALVE ..... W4 - 4

W4-14 CHECK VALVE ..... W4 - 4

W4-15 AIR AND VACUUM RELEASE VALVE ..... W4 - 4

W4-16 PRESSURE REDUCING STATION ..... W4 - 5

W4-17 CITY-FURNISHED INDIVIDUAL PRESSURE REDUCING VALVE (RESIDENTIAL) ..... W4 - 6

W4-18 CITY-FURNISHED INDIVIDUAL PRESSURE REDUCING VALVE (MULTI-FAMILY OR COMMERCIAL) ..... W4 - 6

W4-19 FIRE HYDRANT ..... W4 - 7

W4-20 HYDRANT GUARD POSTS ..... W4 - 7

W4-21 METER SETTER ..... W4 - 7

W4-22 CORPORATION STOP ..... W4 - 7

W4-23 METER BOX ..... W4 - 8

W4-24 COPPER SERVICE PIPE ..... W4 - 8

W4-25 PLASTIC SERVICE PIPE ..... W4 - 8

W4-26 PIPE INSULATION ..... W4 - 9

W4-27 CONCRETE BEDDING & BLOCKING ..... W4 - 9

W4-28 JOINT RESTRAINT ..... W4 - 9

W4-29 REDUCED PRESSURE BACKFLOW ASSEMBLY ..... W4 - 10

W4-30 REDUCED PRESSURE BACKFLOW ASSEMBLY WITH DETECTOR ..... W4 - 10

W4-31 DOUBLE CHECK VALVE ASSEMBLY ..... W4 - 10

W4-32 DOUBLE CHECK VALVE ASSEMBLY WITH DETECTOR ..... W4 - 10

W4-33 BACKFLOW DEVICE RESILIENT SEATED SHUT-OFF VALVES ..... W4 - 11

W4-34 BARRIER FENCE ..... W4 - 11

W4-35 GRAVEL ..... W4 - 11

W4-36 STEEL CASING ..... W4 - 12

W4-37 CASING SPACER ..... W4 - 12

W4-38 CONTROLLED DENSITY FILL ..... W4 - 14

CHAPTER W5 - WATER METHODS OF CONSTRUCTION

W5-01 GENERAL CONSTRUCTION REQUIREMENTS ..... W5 - 1

W5-02 WATER QUALITY ..... W5 - 1

W5-03 LAYING DUCTILE IRON PIPE ..... W5 - 2

W5-04 POLYETHYLENE ENCASEMENT ..... W5 - 2

W5-05 LAYING GALVANIZED IRON PIPE ..... W5 - 3

W5-06 FIRE HYDRANT INSTALLATION ..... W5 - 3

W5-07 VALVE INSTALLATION ..... W5 - 3

W5-08 AIR VACUUM INSTALLATION ..... W5 - 4

W5-09 VALVE BOX MARKER INSTALLATION ..... W5 - 4

W5-10 SERVICE LINES ..... W5 - 4

W5-11 PRESSURE REDUCING STATION ..... W5 - 5

W5-12 CITY-FURNISHED INDIVIDUAL PRESSURE REDUCING VALVE ..... W5 - 5

W5-13 CONCRETE BLOCKING ..... W5 - 6

W5-14 CONNECTION TO EXISTING WATERMAIN ..... W5 - 6

W5-15 ORDER OF CONSTRUCTION ..... W5 - 7

W5-16 HYDROSTATIC TESTS ..... W5 - 7

W5-17 STERILIZATION & FLUSHING OF WATER MAINS ..... W5 - 8

W5-18 PRECONSTRUCTION PHOTOS FOR CITY CONTRACTS ..... W5 - 9

W5-19 UNDERGROUND UTILITIES ..... W5 - 9

W5-20 CONSTRUCTION ON EASEMENTS ..... W5 - 10

W5-21 DUST CONTROL ..... W5 - 10

W5-22 BARRIER FENCE ..... W5 - 10

W5-23 TRENCH EXCAVATION ..... W5 - 10

W5-24 SHEETING & SHORING ..... W5 - 11

W5-25 TRENCH DEWATERING ..... W5 - 11

W5-26 TRENCH BACKFILL AND COMPACTION ..... W5 - 11

W5-27 ADJUST EXISTING STRUCTURE TO GRADE ..... W5 - 13

W5-28 ABANDONING FACILITIES ..... W5 - 14

W5-29 LAWN REMOVAL AND REPLACEMENT ..... W5 - 14

W5-30 BORING UNDER ROOTS ..... W5 - 15

W5-31 HIGHWAY AND RAILROAD CROSSINGS ..... W5 - 15

W5-32 BORING AND JACKING STEEL CASING ..... W5 - 15

W5-33 WORKING WITH ASBESTOS CEMENT PIPE ..... W5 - 16

W5-34 ASBESTOS CEMENT WATERMAIN CROSSINGS ..... W5 - 16

W5-35 CONTROLLED DENSITY FILL ..... W5 - 17

W5-36 VAULT INSTALLATION ..... W5 - 17

W5-37 CLEARANCES/OTHER UTILITIES ..... W5 - 18

APPENDIX

APPENDIX W-1

WATER WORKS STANDARD DETAILS ..... A(W1 - 1)

APPENDIX W-2
DRAFTING STANDARDS ..... A(W2 - 1)

APPENDIX W-3
SAMPLE TITLE BLOCK ..... A(W3 - 1)

APPENDIX W-4
WATER APPROVED MATERIALS LIST ..... A(W4 - 1)

CHAPTER W1 - GENERAL REQUIREMENTS

TABLE OF CONTENTS

W1-01 GENERAL ..... W1 - 1

W1-02 DEFINITIONS ..... W1 - 1

W1-03 REFERENCES ..... W1 - 4

W1-04 GOVERNMENTAL AGENCY REQUIREMENTS ..... W1 - 4

CHAPTER W1 - GENERAL REQUIREMENTS

W1-01 GENERAL{}

These Engineering Standards set forth minimum standards for the planning, design, and construction of water facilities.

The Water Utility Code, part of Chapter 24.02 of the Bellevue City Code, adopted April 3, 1995, is the basis for these Engineering Standards.

These standards do not include design of special facilities, such as Pump Stations or Reservoirs. These special facilities require unique design requirements and will be subject to individual review by the Utility.

Although these standards are intended to apply to physical development within the Utility, the standards will not apply for all situations. Compliance with these standards does not relieve the designer of the responsibility to apply conservative and sound professional judgement. These are minimum standards and are intended to assist, but not substitute for competent work by design professionals. The Utility may at it's sole discretion due to special conditions and/or environmental constraints, require more stringent requirements than would normally be required under these standards.

W1-02 DEFINITIONS

The following terms as used in this document shall be defined and interpreted as follows:

"Central Business District (CBD)"

That area of Bellevue generally bounded by Main Street, NE 12th Street, 100th Avenue NE, and 112th Avenue NE.

"Contractor"

The person, partnership, firm or corporation contracting to do the work under these Documents. The term shall also include the Contractor's agents, employees and subcontractors.

"Details or Additional Drawings"

All details or drawings prepared to further explain or amplify the plans, or for the revision of the same, all as herein provided.

"Developer"

Any individual, company, partnership, joint venture, corporation, association, society or group that has made, or intends to make, application to the City for permission to construct a water system connection, or extension, to the City's water system.

"Engineer"

The City of Bellevue Utilities Engineer or his duly authorized assistants, which includes Chief Engineer, Project Engineer, Consultant Engineer and/or Inspectors.

"Equipment"

The machinery, accessories, appurtenances and manufactured articles to be furnished and/or installed under the Project.

"Material or Materials"

These words shall be construed to embrace machinery, manufactured articles, materials of construction (fabricated or otherwise) and any other classes of material to be furnished in connection with the Project.

"Or Equal"

Any manufactured article, material, method, or work which, in the opinion of the Engineer, is equally desirable or suitable for the purposes intended in these standards as compared with similar articles specifically mentioned herein.

"Plan"

All official drawings or reproductions of drawings made or to be made pertaining to the work provided for in the permit or developer extension agreement.

"Project"

The structure or improvement to be constructed in whole or in part.

"Reference Specifications"

Reference specifications shall mean the technical specifications of other agencies incorporated or referred to herein.

"Specifications"

The specifications shall mean the prescribed directions, requirements, explanations, terms and provisions pertaining to the various features of the work to be done, or manner and method of performance. They also include directions, requirements, and explanations as set forth on the plans.

"Standard Details"

City of Bellevue Utilities Department standard detail drawings.

"Standard Specification"

"1998 Standard Specifications for Road, Bridge and Municipal Construction", English edition, Washington State Department of Transportation and the American Public Works Association including all amendments.

"Words and Phrases"

Whenever the words, "as directed", 'as required', "as permitted", or words of like effect are used, it shall be understood that the direction, requirement or permission of the Engineer is intended. The words, "sufficient", "necessary", "proper", and the like shall mean sufficient, necessary or proper in the judgment of the Engineer. The words, "approved", "acceptable", "satisfactory", or words of like import shall mean approved by or acceptable to the Engineer.

"Work"

The work necessary to manufacture and deliver machinery, equipment and material and/or the furnishing of all labor, tools, material, equipment, construction equipment, working drawings, where required, and other, necessities for the construction or erection of the structures shown and called for in the plans, specifications and permit/Developer Extension Agreement, and the act of constructing or erecting said structures complete.

W1-03 REFERENCES

Wherever references are made to the standards, specifications, or other published data of the various national, regional, or local organizations, such organizations may be referred to by their acronym or abbreviation only. As a guide to the user, the following acronyms or abbreviations which may appear, shall have the meanings indicated herein:

AASHTO	American Association of the State Highway and Transportation Officials.
ANSI	American National Standards Institute, Inc.
WSDOT	Washington State Department of Transportation
APWA	American Public Works Association
ASTM	American Society for Testing and Materials

AWWA	American Water Works Association
DOH	Department of Health
WAC	Washington Administrative Code

W1-04 GOVERNMENTAL AGENCY REQUIREMENTS

All construction on City, County or State roads or right-of-way shall be done in accordance with the agency's standards and requirements and in accordance with the franchise and/or permit requirements. The Contractor is responsible to determine these requirements prior to construction.

Where conflict exists between these Standards and permit requirements, the most stringent permit requirements shall take precedence.

CHAPTER W2 - PLAN SUBMITTAL

TABLE OF CONTENTS

W2-01 GENERAL ..... W2 - 1

W2-02 DEVIATIONS ..... W2 - 1

W2-03 ERRORS AND OMISSIONS ..... W2 - 1

W2-04 PLANS ..... W2 - 2

CHAPTER W2 - PLAN SUBMITTAL

W2-01 GENERAL

Following these standards to design the water system will help ensure a timely review of the proposed project and keep review costs to a minimum.

W2-02 DEVIATIONS

W2-02.1 General

The Developer may propose a deviation from the Standards. A non-standard system may take longer to review resulting in increased processing costs. The Developer acknowledges these risks when submitting a non-standard system for review.

W2-02.2 Deviation Criteria

Requests for deviations which are site or project specific, shall be reviewed by the Utilities Technical Committee (Engineering Team). The City's decision to grant, deny, or modify the proposed deviation shall be based upon evidence that the deviation request meets the following criteria:

A. The change will achieve the intended result through a comparable or even superior design; and

B. The change will not adversely affect safety and/or operation; and

C. The change will not adversely affect maintainability.

W2-03 ERRORS AND OMISSIONS

Any errors or omissions in the approved plans or information used as a basis for such approvals may constitute grounds for withdrawal of any approvals and/or stoppage of any or all of the permitted work, as determined by the City. It shall be the responsibility of the Developer to show cause why such work should continue, and make such changes in plans that may be required by the City before the plans are re-approved.

W2-04 PLANS

W2-04.1 General

Utility plans submitted for review shall meet "Boundary & Topographic Survey" and "Site Plan B" requirements. Current copies of these requirements are available at the City Hall Permit Center. The Utilities representative at the Permit Center will determine which requirements, if any, are not applicable to the proposed project.

W2-04.2 Submittal Standards

Combining Plans - Water, sanitary sewer and storm drainage designs (complete plan and profile) shall be on separate plan sheets, although alignments of all Utilities shall be shown on each utility plan. Plan sets for all three Utilities can be combined for small projects. Designs for water and sewer can be combined on the same plan sheets if plan scale is 1"=10', 1"=20', or 1"=30'. Contact the Utility representative in the Permit Center for approval to combine plans.

Submittals shall include:

Title Block - Border and title block shall conform to standard City of Bellevue format. See Appendix W-3.

Project Name, Section - Township - Range, and Site Address shall be included in title block (lower right hand corner).

Engineering Plans - Plan, and detail sheet(s) for the proposed water system.

Scale - Be consistent, and indicate your scale on each sheet using a bar symbol (for plan reproduction integrity) . Drawings are to be at a scale of 1"=10', 1"=20', or 1"=30' for combined utility plans. Drawings at 1"=40' or 1"=50' scale shall show utility plans on separate sheets. Architectural scales for utility drawings will not be accepted. If the scale results in more than three pages of plan sheets, a cover sheet showing the entire project site (at a smaller scale) shall be provided.

North Arrow - Include on all plan view drawings. Where possible, north arrow shall face up and/or to the right hand side of plan sheet.

Datum - Show both horizontal (NAD-83-91) and vertical (NAVD 88) control points.

Vicinity Map - Include on the plan for each utility. The vicinity map covers the project site and surrounding streets and property within a minimum of 600' of the site. Copies of a city map can be made from the Street Atlas in the Self Help area of the Permit Center.

Drawing Quality - The drawing should be easy to read, with all lines and letters dark enough to provide good contrast with the paper.

Drafting Media - Plans sheets shall be on 24"x 36"or 22" x 34"mylar, matte on both sides.

Drafting Standards - Plotting shall be on mylar with a non-smudging, ink or ink-like media. Pencil drawings (including corrections or alterations) will not be accepted.

Drafting Standards/Symbols shall conform to Washington State APWA Chapter CAD Standards. See Appendix W-2. Lettering shall be done with "Leroy-style" font (SIMPLEX font if using AutoCAD).

Text identifying existing features shall be 0.08" in height (Leroy 80 template).

Text identifying street names shall be 0.24" in height (Leroy 240 template).

Text for instructions and call outs for proposed facilities shall be 0.12" in height (Leroy 120 template).

On plans with more than one sheet, stationing shall proceed from left to right or from bottom to top.

Upon approval for construction, final plan shall be provided in digital format for as-builting and permanent record. The digital format shall be AutoCAD^{tm} Release 14 (or earlier) ".DWG" file on an MS-DOS formatted 3.5" floppy disk or Zip disks. The AutoCAD^{tm} files shall include all plans, profiles, notes, and details of the water improvements.

Making Copies of Plans - Blueline or blackline prints and photocopies are acceptable. Brownline prints and microfilm copies of plans will not be accepted.

Type of Paper for Plan Copies - Blueprint quality or standard drafting paper. Tissue paper, graph paper, posterboard, cardboard, and similar materials will not be accepted.

W2-04.3 Water General Plan Notes

The following is a listing of General Notes that should be incorporated on the first water plan sheet. All the notes on the list may not pertain to every project. The Developer should include only those notes that are relevant to the project and may omit non-relevant notes. However, do not renumber the remaining General Notes. If additional notes are needed for specific aspects, they should be added after the General Notes.

Water General Notes:

1. All work shall conform to City of Bellevue Utility Engineering Standards and the Developer Extension Agreement.

2. All pipe shall be ductile iron class 52 unless otherwise shown.

3. All pipe and fittings not to be disinfected in place shall be swabbed with 1% available chlorine solution prior to installation.

4. The new watermain shall be connected to the existing system only after new main is pressure tested, flushed, disinfected and satisfactory bacteriological sample results are obtained. See Standard Detail W-8.

5. After disinfecting the watermain, dispose of chlorinated water by discharging to the nearest operating sanitary sewer.

6. Watermain shut-off shall be coordinated with the Water Operations Division for preferred timing during flow control conditions. Watermain shut-offs shall not be scheduled to take place on Fridays, or on the day before a City holiday, unless otherwise approved by the Utility.

7. The locations of all existing utilities shown hereon have been established by field survey or obtained from available records and should therefore be considered approximate only and not necessarily complete. It is the sole responsibility of the contractor to independently verify the accuracy of all utility locations shown, and to further discover and avoid any other utilities not shown hereon which may be affected by the implementation of this plan.

8. Deflect the watermain above or below existing utilities as required to maintain 3 ft. minimum cover and 12 inch minimum vertical clearance between utilities unless otherwise specified.

9. Wrap all ductile iron pipe and adjacent valves and fittings with 8-mil. polyethylene conforming to AWWA C105.

10. The watermain shall be installed only after the roadway subgrade is backfilled, graded and compacted in cut and fill areas.

11. Trench backfill and surface restoration of existing asphalt pavement shall be as required by the right-of-way use permit.
12. All fittings shall be blocked per Standard Detail unless otherwise specified.

13. All services shall be 1" x 3/4" per Standard Detail unless otherwise specified.

14. When working with asbestos cement pipe, the Contractor is required to maintain workers' exposure to asbestos material at or below the limit prescribed in WAC 296-62-07705.

15. Call 1-800-424-5555 48 hours before construction for utility locations.

16. Uniform plumbing code requires the installation of privately owned and operated pressure reducing valves where the operating pressure exceeds 80 psi.

17. The Contractor shall use a vacuum street sweeper to remove dust and debris from pavement areas as directed by the Engineer. Flushing of streets shall not be permitted without prior City approval.

18. Before commencement of trenching, the Contractor shall provide filter fabric for all downhill storm drain inlets and catch basins, that will receive runoff from the project site. The Contractor shall periodically inspect the condition of all filter fabric and replace as necessary. For all construction during the rainy season, downhill basins and inlets must be protected with catch basin inserts. Simply placing filter fabric under the grate is not acceptable.

19. Abandonment of existing water services shall be accomplished as follows:

    a. Remove existing service saddle from water main and replace with new stainless steel repair band, Romac SS2, Romac Service Saddle 101S, or approved equal (will not be required when water main is to be abandoned prior to service demolition).

    b. Remove and dispose of existing setter and meter box.

    c. Cap or crimp (if copper) existing service line to be abandoned in place, each end.

    d. Return existing meter to City of Bellevue Utilities Inspector.

20. Where new utility line crosses below an existing AC main, the AC pipe shall be replaced with DI pipe to 3 feet past each side of the trench as shown on Standard Detail W-7. Alternatively, where directed by the Engineer, the trench shall be backfilled with controlled density fill (CDF, aka flowable fill) from bottom of trench to spring line of the AC main.

21. Avoid crossing water or sewer mains at highly acute angles. The smallest angle measure between utilities should be 45 to 90 degrees.

22. Where watermain crosses above or below sanitary sewer, one full length of water pipe shall be centered for maximum joint separation.

23. At points where existing thrust blocking is found, minimum clearance between the concrete blocking and other buried utilities or structures shall be 5 feet.

CHAPTER W3 - WATER PLANNING/DESIGN STANDARDS

TABLE OF CONTENTS

W3-01 PLANNING CRITERIA ..... W3 - 1

W3-02 GENERAL DESIGN STANDARDS ..... W3 - 2

W3-03 VALVING ..... W3 - 4

W3-04 FIRE HYDRANTS ..... W3 - 5

W3-05 PIPE CLASS / PROTECTION / COVER ..... W3 - 5

W3-06 CLEARANCES / OTHER UTILITIES ..... W3 - 7

W3-07 SLOPES ..... W3 - 8

W3-08 CONNECTIONS TO EXISTING SYSTEM ..... W3 - 8

W3-09 EASEMENTS ..... W3 - 9

W3-10 SERVICES ..... W3 - 9

W3-11 BACKFLOW PREVENTION ..... W3 - 10

W3-12 LANDSCAPE WATER BUDGETING REQUIREMENTS ..... W3 - 11

W3-13 IRRIGATION SYSTEM DESIGN AND PERFORMANCE REQUIREMENTS ..... W3 - 18

CHAPTER W3 - WATER PLANNING/DESIGN STANDARDS

W3-01 PLANNING CRITERIA

W3-01.1 Serve to Extreme of Property

Ensure adjacent properties can be provided water service (extend to extreme of property with adequate capacity and pressure)

W3-01.2 Demand Projections

Demand projections are taken from City of Bellevue 1992 Water Comprehensive Plan.

A. Unit Demands

Single Family	-	100 Gallons per Capita per Day (GPCD)
Multi-family	-	80 GPCD
Commercial	-	20 Gallons per Day per 250 Square Feet of Floor Area
Hotel/Motel	-	50 GPCD

B. Population Densities

2.8 people per single family unit
1.8 people per multi-family unit
1.5 people per hotel/motel room

C. Peaking Factors

Maximum Day Demand (MDD) = Average Day Demand (ADD) x 2.25
Peak Hour Demand (PHD) = Maximum Day Demand (MDD) x 1.80

W3-01.3 System Parameters

A. Water velocity in mains - velocities shall not exceed 10 feet per second during highest demand and fireflow.

B. Distribution System Pressures (Measured at Building Elevation):

Desirable	-	Minimum	50 psi
		Maximum	80 psi
Allowable	-	Minimum	43 psi

Maximum 125 psi

Minimum 30 psi is allowed for existing systems.

Individual pressure reducing valves are required on all services when water pressure exceeds 80 psi.

C. Reservoir Replenishment - Facilities (i.e. transmission mains, pump stations) shall be sized to enable storage facilities to be refilled within 3 days after an emergency or major fire.

W3-01.4 Fireflow Requirements

Fireflow requirements shall be as determined by either City of Bellevue or King County Fire Marshal.

A. The Utility will determine available fireflow using its computer simulated model.

B. Minimum system pressure during fireflow analysis is 20 psi at the fire location and 10 psi throughout the rest of the system.

W3-02 GENERAL DESIGN STANDARDS

A. Each fitting/valve shall have attachment type listed (e.g. FL, MJ, FL x MJ, etc.).

B. List pipe length (from center-of-fitting to center-of-fitting), size, and material along side of each pipe, e.g. 150 L.F. - 8" D.I.. Pipe material can be listed in a general note in lieu of listing along each pipe.

C. Indicate type of pavement restoration required by right-of-way authority having jurisdiction (if working in existing streets).

D. Dimension existing and new main locations from right-of-way line and/or property line, or label stations and offsets.

E. Blocking - Reference Standard Details

- At vertical bends, pipe shall be restrained a minimum of 36 feet (2 joints) from each side of bend. Reduced-size concrete blocks shall be installed at bends per Standard Detail W-2. No change in pipe direction or diameter shall occur within 36 feet of the vertical bend. In addition, bends, tees, reducers, etc., beyond the 36-foot limit, shall be restrained with standard blocking per

Standard Detail W-1 and W-3. Where this criteria cannot be met, plans should call for vertical blocking without joint restraint per Standard Detail W-3, or a restraint method should be designed and detailed on the plan.

- Check if special blocking or joint restraint designs are necessary (e.g. poor soil, conflicting utility, etc.).
- Show all blocking on any detail drawing that shows vertical bends.
- See Appendix W-4 - Approved Materials List for joint restraint methods, other than concrete blocking..

F. Check if system may require additional looping (i.e. eliminate dead end lines).

G. To assure compatibility with existing system, check with Utility Development Division to determine hydraulic gradients.

H. Drawings shall reference distance to nearest existing valve and/or hydrant from new point of connection to existing watermain.

I. Check with local jurisdiction for necessary permitting requirements.

J. Provide temporary 2" blow off assemblies for testing and disinfection of new watermains (where hydrants are not available). Place blow-off at high end of line, where possible.

K. Cap end of existing water lines to be abandoned as follows:

- Asbestos cement lines: use end cap coupling.
- Cast or ductile iron lines: use MJ cap or plug.

L. Minimum watermain size

- 8" minimum when serving fire hydrants.
- 6" minimum may be used in localized conditions where fire hydrants are served by looped lines, subject to Utility approval.
- 4" minimum shall be used to serve water to end of cul-de-sac when no future extension is required.

M. Pressure reducing station plans should show location of pressure relief discharge pipe

and discharge point of floor drain piping (drain to daylight). Pressure relief discharge pipe shall be shown at a location that will not be subject to damage or erosion during discharge of water.

N. All water vaults (water service, backflow device, pressure reducing station, etc.) shall include designs for floor drain piping draining to daylight. Discharge point of vault floor drains shall be shown on the plan. Where vault floor drain cannot drain to daylight, consult with the City during project design review to determine the best alternative to a daylight drain.

W3-03 VALVING

A. 600' maximum distance between valves on distribution mains, except, in the Central Business District (CBD), maximum valve spacing shall be 200'.

B. Provide a valve at each end of an easement.

C. At watermain intersections, valves shall be placed on 3 out of 4 legs at each cross, and 2 out of 3 legs at each tee (unless tapping an existing watermain).

D. Additional valving may be required for area isolation.

E. Air/vacuum relief valves shall be installed at local high points in watermain.

W3-04 FIRE HYDRANTS

The following information is provided as a guideline to be used during design. The final number of hydrants and their location shall be approved by the City of Bellevue or King County Fire Marshal.

A. Guard posts are to be used only in parking lots when no curbs are present or in exposed areas in parking lots.

B. Fireline/hydrant run over 50' in length must be 8" (terminate with tee, plug and hydrant assembly).

C. Fire hydrant location:

Single-family residential:	Spacing = 500' apart. Coverage =250' from front property line of the main body of a lot.
Multi-family/commercial:	As determined by the fire marshall.
Exception:	On arterial streets without residential access (through traffic only), maximum hydrant spacing

shall be 1000'.

D. 3' minimum clearance shall be provided around hydrant for operation.

E. Piping between fire sprinkler vaults and protected building shall not be shown on water design.

W3-05 PIPE CLASS / PROTECTION / COVER

A. Pipe shall be ductile iron, class 52.

B. Ductile iron pipe shall be encased in a steel or ductile iron casing when crossing under improvements where the ability to remove and replace pipe without disturbance to the improvement is needed. Casings are required when:

- Crossing under rockeries over 5' high.
- Crossing under retaining wall footings over 5' wide.
- Crossing under reinforced earth retaining walls (both wall and reinforcing material).

Casings shall extend a minimum of 5' past each edge of the improvement, or a distance equal to the depth of pipe whichever is greater. The carrier pipe shall be supported by casing spacers.

Minimum clearance between bottom of rockery and top of pipe or casing shall be 2'. The trench shall be backfilled with crushed rock when clearance is less than 3'.

C. Watermain depth of cover:

- 3' minimum from final grade (see exception in W3-05.D. below)
- 6' maximum from final grade

D. Building setback requirements:

- 5' minimum from covered parking to watermain.
- 10' minimum from building (and retaining walls) to watermain.
- 20' minimum easement shall be provided between buildings.
- When passing between buildings which are 25' apart or less, ductile iron pipe shall be installed with 2' of pipe cover (5' beyond the limits of each building).

E. All ductile iron pipe and adjacent fittings shall be encased in 8-mil polyethylene per AWWA C105.

W3-06 CLEARANCES / OTHER UTILITIES

A. All clearances listed below are from edge-to-edge of each pipe.

B. Water services and sewer stubs shall have at least 5' horizontal separation.

C. Check for crossing or parallel utilities. Maintain minimum vertical and horizontal clearances. Avoid crossing at highly acute angles (smallest angle measure between utilities should be between 45 and 90 degrees).

D. At points where thrust blocking is required, minimum clearance between the concrete blocking and other buried utilities or structures shall be 5'.

E. Horizontal clearances from watermain:

Cable TV	5'
Gas	5'
Power	5'
Storm	5'
Sanitary	10'
Telephone, Fiber Optics	5'

F. Vertical clearances from watermain:

Cable TV	1'
Gas	1'
Power	1'
Storm	1'
Sanitary	2'
Telephone, Fiber Optics	1'

G. Where watermain crosses above or below sanitary sewer, one full length of water pipe shall be used with the pipes centered for maximum joint separation. Washington Department of Ecology criteria will also apply.

H. Send letter and preliminary plan to existing utilities to inform them of new construction. Request as-built information and incorporate into plans. At minimum the following utilities should be contacted:

Cable Television
Natural Gas

Power
Sanitary Sewer
Storm Drainage
Telephone, Fiber Optics

I. Draft plans shall be sent to the above listed utilities to allow coordination of projects.

W3-07 SLOPES

A. Vertical bends shall be used when joint deflection would exceed one-half of pipe manufacturer's recommended maximum deflection.

B. Pipe joints shall be restrained where slopes are 20% or greater. Joint restraint on slopes shall be megalug restrainer for mechanical joint fittings and tie rod/retainer clamp assemblies for DI push on joints, or other methods from approved materials list. Anchor blocks per Standard Detail shall be used in conjunction with joint restraint where slopes are 20% or greater.

C. Timber baffle/hill holders shall be required on unpaved slopes that exceed 20%, minimum spacing shall be 20' on center.

W3-08 CONNECTIONS TO EXISTING SYSTEM

A. When tapping water mains use stainless steel or full-bodied cast iron Mueller-type tapping tee.

B. Connections to existing mains 8" and larger shall be via a wet tap unless otherwise approved by the utility. The wet tap shall be a minimum of one pipe size smaller than the existing main.

C. Size-on-size tapping tees are not allowed.

D. Connections to existing mains smaller than 8" diameter shall be made by cutting in a tee, unless otherwise approved by the Utility.

E. Where cut-in connection is made in the Central Business District (CBD), always install an in-line gate valve.

F. In the Central Business District (CBD), 3", 4" and 6" domestic service and fire sprinkler lines shall connect to the existing water main with 8" pipe and gate valve (valve will be 6" if tapping existing 8" diameter main). Extend 8" pipe from water main to vault before reduce to service/fire line size.

W3-09 EASEMENTS

A. Show easements on plans and identify width.

B. Show easements on all private property. If easement is defined as a constant width on each side of watermain, then show a segment of the easement and label as typical (typ).

C. All easements shall be a minimum of 15' in width, unless otherwise approved or required by the Utility.

D. Also see Section W3-05.D. "Building Setback Requirements".

W3-10 SERVICES

A. Minimum allowable service size shall be 1" x 3/4". Check that minimum pressure can be maintained when service is flowing at anticipated maximum levels. If friction losses will cause pressure at building to drop below minimum, increase service line size as necessary to raise pressure.

B. Show location of water services on plan and indicate size. Sizes shall be determined by the Developer per the Uniform Plumbing Code. **Minimum service size allowed in the Central Business District is 1" x 1".**

C. Irrigation shall be by separate water main connection and service.

D. Static service pressures at ground floor elevation shall be determined at all lots/buildings to ensure compliance with system pressure standards.

E. Plan shall identify lots/buildings where builder/owner should install individual pressure reducing valves. Required on customer side of service lines (after water meter box) when service pressures exceed 80 psi.

F. 3" through 8" service installations shall include full-size bypass per Standard Details.

G. In the Central Business District (CBD), domestic services, 4" and larger, that connect to an existing watermain with a cut-in tee, shall include a gate valve on <u>each</u> leg of the tee. If the building is served by a second full-size service, that can remain in service while the watermain supplying the other service is shut down, only one mainline and one branch-line valve will be required with the cut-in tee.

W3-11 BACKFLOW PREVENTION

"Per City Code 24.02.190, irrigation systems, fire sprinkler systems, and other water uses which may or will cause the contamination of the potable water supply by backflow, shall be required to install approved backflow prevention assemblies, and/or otherwise meet the requirements of the WAC 246-290-490 "Cross Connection Control Regulation in Washington State", and the recommendations of the PNWS-AWWA Cross Connection Control Manual, latest edition. Requirements may include premise, facility, or fixture isolation, or a combination of such, depending upon the degree of hazard. All backflow prevention assemblies installed shall be on the Washington State DOH list of approved backflow prevention assemblies, most recent edition at the time of installation, and shall be installed per the Standard Details.

Fire sprinkler system connections to the City's water system shall be owned and maintained by the property owner, beginning immediately downstream of the gate valve where the system connects to the City's water main.

The backflow prevention assembly on fire sprinkler system connections shall be located as close to the serving water main as possible, either on the owner's property or an easement dedicated to the owner's property.

Interior backflow prevention, when permitted, must meet the Uniform Plumbing Code requirements as administered by the Building Division. Such backflow prevention must also meet the requirements of the Bellevue Utilities Department.

Multi-family projects that have eight or more units and that require a double check valve assembly are strongly recommended to provide a bypass with equal backflow prevention to avoid loss of service during maintenance and repair.

W3-12 LANDSCAPE WATER BUDGETING REQUIREMENTS

As required by Bellevue City Code, section 24.02.205 (Water Code), new or redeveloped landscapes shall comply with the following Landscape Water Budgeting Requirements methodology.

W3-12.1 General Irrigation Water Budgeting Information :

A. Landscape Water Budgeting is a two step process: First, the maximum amount of irrigation water the landscape can be designed to use must be determined. This is called the Irrigation Water Budget (IWB). Second, the total amount of irrigation water needed to sustain the landscape design must be estimated. This is called the Total Estimated Water Use (TEWU). The landscape design's TEWU may not exceed it's IWB.

B. The IWB must be reported on the Utilities Department's "Irrigation Water Budget Form". The TEWU must be reported on the "Total Estimated Water Use Form". These two forms, together with a copy of the landscape's design/plans and a "Water Efficient Landscape Design Certification" must be submitted to, and

approved by, the Utility prior to installation of the landscape.

W3-12.2 Determining the Landscape's Irrigation Water Budget & Total Estimated Water Use

A. A landscape design's IWB shall be calculated based upon the total square footage of the proposed landscape area, excluding retained native vegetation areas and impervious surfaces, using the following formula:

$$IWB = ET \times AF \times LA \times CF$$

IWB: Irrigation Water Budget allowed.

ET: Evapotranspiration Rate of 14.49 inches (per irrigation season, see Section W3-12.3).

AF: Adjustment Factor of 0.8 (0.5/0.625 irrigation efficient).

LA: Landscape Area in square feet.

CF: Conversion Factor of 0.62 (inches to gallons per square foot).

B. A landscape design's TEWU shall be calculated by determining the Estimated Water Use (EWU) for each hydrozone (reference Irrigation System Design requirements, Section I), and adding the EWU for all landscape hydrozones together. The sum of the EWU for all hydrozones is the landscape's TEWU. The following formula shall be used to determine the EWU for each hydrozone:

$$EWU = (ET \times PF \times HA \times CF) / IE$$

EWU: Estimated Water Use (for each hydrozone)

ET: Evapotranspiration Rate of 14.49 inches (per irrigation season, see Section W3-12.3).

PF: Plant Factor value for hydrozone (see Section W3-12.4).

HA: Hydrozone Area in square feet.

CF: Conversion Factor of 0.62 (inches to gallons per square foot).

IE: Irrigation Efficiency value for hydrozone (see Section W3-12.5).

W3-12.3 Evapotranspiration Data For The Puget Sound Lowlands Region

Landscape design's IWB, TEWU, and hydrozone EWU shall be based upon the following evapotranspiration (ET) data which represents historical monthly net irrigation requirements for turfgrass typically used in commercial landscapes. The ET data is in inches per month for the Puget Sound Lowlands Region, and is based upon the 30 year average of National Weather Service data:

Jan	Feb	Mar	Apr	May	Jun	Jul	Aug	Sep	Oct	Nov	Dec	Total
.00	.00	.00	.00	1.59	3.13	4.46	3.51	1.77	.03	.00	.00	14.49

W3-12.4 Plant Factor Values For Hydrozone EWU Calculations

PF values represent the percentage of ET demand a particular plant species, or hydrozone, has in comparison to turfgrass. In other words, if a particular plant species has only one-half the water demand per square foot that turfgrass does, it would be assigned a PF value of 0.5.

A. The PF values in Section W3-12.4.B. shall be used for all plant species selected for use in a landscape. The landscape designer shall, based upon professional experience, assign a PF value to each plant species designed within a hydrozone. The PF for the hydrozone shall be that of the plant species with the highest PF within the hydrozone, accounting for:

1. Each plant species' typical water needs in an appropriate planting (ie: a plant which is best suited to sandy soils with partial shade and well suited to the Puget Sound climate, and is in fact designed/planted in partial shade and sandy soil (appropriate plant placement) would typically be either a (select one) low, medium, or high water use plant).

2. Conditions which may decrease or increase a plants water needs, such as improper exposure, soil conditions, density of planting, adaptability to area's climate, etc.

B. Plant Factor Chart

Plant Factor values assigned shall reflect the plant species actual water demand as planted according to the final landscape design/plan.

EXAMPLE: A hardy rhododendron planted in a near native state (shade to partial shade, with rich, moist soils) could be assigned a PF of between 0.0 to 0.3. However, the same plant, if planted in poor soils, with full exposure to sun in the middle of a parking lot, should likely be assigned a PF between 0.7 and 1.0.

BASIC PLANT FACTOR CLASS **PF RANGE**

Low water use plants	0.0 to 0.3
Medium water use plants	0.4 to 0.6
High water use plants	0.7 to 1.0
All irrigated turfgrass	0.8 to 1.0

W3-12.5 Irrigation System Efficiency Values

Irrigation system efficiency values shall be assigned as follows in calculating the Estimated Water Use for each hydrozone of a landscape:

Type of Irrigation System Used in Hydrozone	**Efficiency Value**
Conventional Overhead Spray System: (i.e.: rotors and pop-up spray systems; most commonly used to irrigate turf, but also used in plant beds)	0.625
Low Volume or Drip Irrigation System: (i.e.: micro-spray, bubbler, drip, or other low volume systems which apply water below the ground surface, or directly to the plants root zone; most commonly used in plant beds)	0.925

W3-12.6 Landscape Water Budgeting Certification & Forms

The "Water Efficient Landscape Design Certification", "Irrigation Water Budget Form", and "Total Estimated Water Use Form" on the following pages shall be used in calculating and reporting the landscape's IWB, TEWU, and EWU, and to certify that the landscape has been designed in compliance with the requirements of Bellevue City Code 24.02.205 and these Engineering Standards.

WATER EFFICIENT LANDSCAPE DESIGN CERTIFICATION

Project Name: _____

Project Address: _____

Project Owner or Manager _____
(Company Name)

_____
(Contact Name)

_____
(Street Address)

_____
(City, State, Zip)

_____
(Phone)

Landscape Design Contact _____
(Company Name)

_____
(Contact Name)

_____
(Street Address)

_____
(City, State, Zip)

_____
(Phone)

The landscape design/plans for the above stated project have been verified by the Washington State registered Landscape Architect, Washington Certified Nurseryman, or Washington Certified Landscaper stated above to be in compliance with Bellevue City Code 24.02.205 "Landscape Water Budgeting Requirements" (Water Code). All data, calculations, and information required is attached, or shown on the face of the landscape plans.

_____ _____
(Landscape Designer's Signature) (Approval Signature)

_____ Bellevue Utilities Department _____
(Printed Name) (Date) (Date)

IRRIGATION WATER BUDGET FORM

Project Name: _____

Project Address: _____

IWB Formula: IWB = ET x AF x LA x CF

IWB:	Irrigation Water Budget
ET:	Evapotranspiration Rate (14.49")
AF:	Adjustment Factor (0.8)
LA:	Landscape Area (Square Feet)
CF:	Conversion Factor (0.62)

IWB Formula in Simplest Terms: IWB = 7.18704 x LA

Landscape Area: _____ Square Feet x 7.18704 =

IRRIGATION WATER BUDGET: _____ GALLONS

TOTAL ESTIMATED WATER USE: _____ GALLONS

Enter Total Estimated Water Use from Estimated Water Use Form. Total Estimated Water Use Form must accompany Irrigation Water Budget Form. Total Estimated Water use may not exceed Irrigation Water Budget.

TOTAL ESTIMATED WATER USE FORM

Project Name: _____

Project Address: _____

EWU Formula: EWU = ET x PF x HA x CF / IE

EWU: Estimated Water use (per hydrozone)
ET: Evapotranspiration Rate (14.49")
PF: Plant Factor (as determined for hydrozone)
HA: Hydrozone Area (in Square Feet)
CF: Conversion Factor (0.62)
IE: Irrigation Efficiency (Either 0.625 or 0.925)

EWU Formula in Simplest Terms When IE = 0.625: EWU = 14.374 x PF x HA

EWU Formula in Simplest Terms When IE = 0.925: EWU = 9.712 x PF x HA

Hydrozone	HA in Square Feet	Hydrozone Average PF	Hydrozone Irr. Eff. 14.374 OR 9.712		EWU
_____	_____	_____	_____	=	_____
_____	_____	_____	_____	=	_____
_____	_____	_____	_____	=	_____
_____	_____	_____	_____	=	_____
_____	_____	_____	_____	=	_____
_____	_____	_____	_____	=	_____
_____	_____	_____	_____	=	_____
TOTAL SF:	_____		TOTAL EWU:		

(Attach additional forms if necessary)

W3-13 IRRIGATION SYSTEM DESIGN AND PERFORMANCE REQUIREMENTS

As required by Bellevue City Code, Section 24.02.210 (Water Code), new or re-developed irrigation systems shall comply with the following Irrigation System Design Requirements.

W3-13.1 General Irrigation System Design Requirements Information

A. Irrigation systems shall be designed and constructed in such a manner that separate hydrozones within the landscape can be irrigated according to the individual watering needs of the hydrozone. Hydrozones are groupings of plant species used in the landscape which have similar irrigation watering needs (reference "Landscape Water Budgeting Requirements" Section W3-12.2.B and W3-12.4.A & B). Hydrozones of turfgrass shall always be irrigated separately from other landscape hydrozones.

B. Irrigation systems shall be designed and constructed in such a manner that a minimum average distribution uniformity of 0.625 is achieved.

C. Copies of the landscape's and irrigation system's designs/plans, together with a "Water Efficient Irrigation System Design Certification", must be submitted to, and approved by, the Utility prior to construction of the irrigation system.

D. Installed irrigation systems must successfully pass an irrigation system audit verifying a minimum average distribution uniformity of 0.625, and a "Irrigation System Design Certification", must be submitted to, and approved by, the Utility prior to construction of the irrigation system.

When conducting audits to determine an irrigation system's average distribution uniformity, conventional overhead irrigation zones shall be physically audited in determining their distribution uniformity; low volume zones such as drip systems, etc. may be assigned an assumed distribution uniformity of 0.925.

W3-13.2 Irrigation System Design, Operation & Performance Requirements

A. Irrigation systems shall be designed with provisions for winterization by providing either:

1. Manual drains (automatic valves are not permitted) at all low points, or

2. Means to blow out irrigation system pipes with pressurized air.

B. Irrigation systems shall be designed to avoid runoff, low-head drainage, overspray, or other similar conditions where irrigation water flows onto adjacent property,

non-irrigated areas, or impervious surfaces by:

1. Considering soil type infiltration rates.

2. Using proper irrigation equipment and schedules, including such features as repeat cycles and matched application and infiltration rates, and

3. Considering special problems posed by irrigation on slopes, in median strips, and in narrow hydrozones.

C. Irrigation system shall be designed to include an automatic rain shut-off device.

D. Irrigation system designs shall include a written irrigation system management plan which includes:

1. An irrigation system operating schedule based upon the Evapotranspiration Demand Curve, the Estimated Water use for each hydrozone, and the Total Estimate Water Use for the landscape (reference "Landscape Water Budgeting" Section W3-12.3 and W3-12.4.A & B.) And which details:

   a. For each hydrozone (station) the run time in minutes per cycle and cycles per week for each week of the irrigation season (May 1st through October 31st)

   b. The total weekly and annual amount of water to be applied by each hydrozone, and the total landscape, in gallons and in hundreds of cubic feet (CCF) (748 gallons = 1 CCF);

2. Additional operating criteria such as avoiding irrigation during times of high winds, when raining, and/or in the middle of the day.

3. Regular maintenance activities necessary to:

   a. Prevent, detect and repair irrigation system damage, excess wear, and leakage.

   b. Maintain a minimum average distribution uniformity of 0.625.

   c. Activate the irrigation system for use in the spring.

   d. Deactivate and winterize the irrigation system in the fall.

4. Specifications for all irrigation system components originally used, and recommended for use when making repairs to, or replacing parts of the

irrigation system to maintain.

a. A minimum average uniform irrigation efficiency of 0.625.

b. Good overall operational performance of the irrigation system.

W3-13.3 Irrigation System Design and Performance Requirements Certifications

The "Water Efficient Irrigation System Design Certification" and "Irrigation System Audit Certification" on the following pages shall be used to certify that the irrigation system has been designed and installed in compliance with the requirements of Bellevue City Code 24.02.210 and the Utilities Engineering Standards.

WATER EFFICIENT IRRIGATION SYSTEM DESIGN CERTIFICATION

Project Name: _____

Project Address: _____

Project Owner or Manager _____
(Company Name)

_____
(Contact Name)

_____
(Street Address)

_____
(City, State, Zip)

_____
(Phone)

Irrigation System Design Contact _____
(Company Name)

_____
(Contact Name)

_____
(Street Address)

_____
(City, State, Zip)

_____
(Phone)

The landscape irrigation system design/plans for the above stated project have been completed by the Washington State Registered Landscape Architect, Washington State Registered Professional Engineer, or Irrigation Association Certified Irrigation Designer stated above, and are in compliance with Bellevue City Code 24.02.210 "Irrigation System Design and Performance Requirements" (Water Code). All data, calculations, and information required is attached, or shown on the face of the irrigation system plans.

_____ _____
(Landscape Designer's Signature) (Approval Signature)

_____ Bellevue Utilities Department _____
(Printed Name) (Date) (Date)

IRRIGATION SYSTEM AUDIT CERTIFICATION

Project Name: _____

Project Address: _____

Project Owner or Manager _____
(Company Name)

_____
(Contact Name)

_____
(Street Address)

_____
(City, State, Zip)

_____
(Phone)

Irrigation System Auditor Contact _____
(Company Name)

_____
(Contact Name)

_____
(Street Address)

_____
(City, State, Zip)

_____
(Phone)

Irrigation Assoc.: _____
Certification I.D. Number

The landscape irrigation system for the above stated project has been audited by the Irrigation Association Certified Landscape Irrigation Auditor stated above, and is in compliance with Bellevue City Code 24.02.210 "Irrigation System Design and Performance Requirements" (Water Code). Copies of all audit data, calculations, and information is attached.

_____ _____
(Auditor's Signature) (Approval Signature)

_____ Bellevue Utilities Department _____
(Printed Name) (Date) (Date)

CHAPTER W4 - WATER MATERIALS

TABLE OF CONTENTS

W4-01 GENERAL ..... W4 - 1

W4-02 WATER PIPE ..... W4 - 1

W4-03 POLYETHYLENE ENCASEMENT ..... W4 - 1

W4-04 FITTINGS ..... W4 - 2

W4-05 GALVANIZED IRON PIPE ..... W4 - 2

W4-06 COUPLINGS ..... W4 - 2

W4-07 ADAPTERS ..... W4 - 3

W4-08 BOLTS IN PIPING ..... W4 - 3

W4-09 FLANGE GASKETS ..... W4 - 3

W4-10 GATE VALVE ..... W4 - 3

W4-11 VALVE BOX ..... W4 - 3

W4-12 VALVE OPERATING NUT EXTENSION ..... W4 - 4

W4-13 BUTTERFLY VALVE ..... W4 - 4

W4-14 CHECK VALVE ..... W4 - 4

W4-15 AIR AND VACUUM RELEASE VALVE ..... W4 - 4

W4-16 PRESSURE REDUCING STATION ..... W4 - 5

W4-17 CITY-FURNISHED INDIVIDUAL PRESSURE REDUCING VALVE (RESIDENTIAL) ..... W4 - 6

W4-18 CITY-FURNISHED INDIVIDUAL PRESSURE REDUCING VALVE (MULTI-FAMILY OR COMMERCIAL) ..... W4 - 6

W4-19 FIRE HYDRANT ..... W4 - 7

W4-20 HYDRANT GUARD POSTS ..... W4 - 7

W4-21 METER SETTER ..... W4 - 7

W4-22 CORPORATION STOP ..... W4 - 7

W4-23 METER BOX ..... W4 - 8

W4-24 COPPER SERVICE PIPE ..... W4 - 8

W4-25 PLASTIC SERVICE PIPE ..... W4 - 8

W4-26 PIPE INSULATION ..... W4 - 9

W4-27 CONCRETE BEDDING & BLOCKING ..... W4 - 9

W4-28 JOINT RESTRAINT ..... W4 - 9

W4-29 REDUCED PRESSURE BACKFLOW ASSEMBLY ..... W4 - 10

W4-30 REDUCED PRESSURE BACKFLOW ASSEMBLY WITH DETECTOR ..... W4 - 10

W4-31 DOUBLE CHECK VALVE ASSEMBLY ..... W4 - 10

W4-32 DOUBLE CHECK VALVE ASSEMBLY WITH DETECTOR ..... W4 - 10

W4-33 BACKFLOW DEVICE RESILIENT SEATED SHUT-OFF VALVES ..... W4 - 11

W4-34 BARRIER FENCE ..... W4 - 11

W4-35 GRAVEL ..... W4 - 11

W4-36 STEEL CASING ..... W4 - 12

W4-37 CASING SPACER ..... W4 - 12

W4-38 CONTROLLED DENSITY FILL ..... W4 - 14

CHAPTER W4 - WATER MATERIALS

W4-01 GENERAL

All materials shall be new and undamaged. The same manufacturer of each item shall be used throughout the work.

Where reference is made to other specifications, it shall be the latest revision at the time of construction, except as noted on the plans or herein.

All materials not specifically referenced shall comply with applicable sections of ANSI, ASTM, AWWA or the APWA/WSDOT Standard Specifications.

Approved manufacturers and model numbers of various materials are listed in Appendix W-4 of these engineering standards. When specific manufacturers or models are listed, no substitutions will be allowed without prior approval by the Utility.

W4-02 WATER PIPE

Water pipe shall be ductile iron pipe, minimum thickness Class 52, cement-lined unless otherwise specified and shall conform to ANSI/AWWA C151/A21.51 or as shown on plans.

Rubber gasket pipe joints to be push-on-joint (Tyton) or mechanical joint (M.J.) in accordance with ANSI/AWWA C111/A21.11, unless otherwise specified.

Flanged joints shall conform to ANSI B16.1, class 125 drilling pattern, rated for 250 psi working pressure.

Standard thickness cement lining shall be in accordance with ANSI/AWWA C104/A21.4.

The Contractor shall furnish certification from the manufacturer of the pipe and gasket being supplied that the inspection and all of the specified tests have been made and the results thereof comply with the requirements of the above referenced standards.

W4-03 POLYETHYLENE ENCASEMENT

Polyethylene encasement shall be eight mil tube or sheet and shall be furnished with all ductile iron pipe unless otherwise specified. Materials shall comply with ANSI/AWWA C105/A21.5.

W4-04 FITTINGS

All water main fittings shall be ductile iron, short body, cement lined, and for pressure rating of 350 psi for mechanical joint fittings and 250 psi for flange joint fittings, unless otherwise noted. Metal thickness and manufacturing process shall conform to applicable portions of ANSI/AWWA C110/A21.10. Mechanical joint, ductile iron, compact fittings 24 inches and less shall be in accordance with ANSI/AWWA C153/A21.53. Flanged fittings, cast or ductile iron, shall conform to ANSI B16.1, class 125 drilling pattern.

Standard cement lining shall be in accordance with ANSI/AWWA C104/A21.4.

Rubber gaskets for push-on-joints (Tyton) or mechanical joint (M.J.) shall be in accordance with ANSI/AWWA C111/A21.11.

Gasket material for flanges shall be neoprene, Buna N, chlorinated butyl, or cloth-inserted rubber.

Type of connections shall be specified as push-on joint (Tyton), mechanical joint (M.J.), plain end (P.E.), flanged (FL), and threaded.

W4-05 GALVANIZED IRON PIPE

Where galvanized iron pipe is specified, the pipe shall be standard weight, Schedule 40, steel pipe per Standard Specification for black and hot-dipped, zinc-coated (galvanized) welded and seamless steel pipe for ordinary uses (ASTM A-120). Fittings shall be screwed malleable iron galvanized per ANSI B16.3. Galvanized pipe shall be used only for dry pipe in pressure relief vacuum breaker assemblies.

W4-06 COUPLINGS

Flexible coupling and transition coupling cast components shall be ductile iron. Center rings and end rings shall be ductile iron in accordance with ASTM 536-80, Grade 65-45-12.

Gasket material shall be virgin SBR in accordance with ASTM D2000 3 BA715.

Bolts shall be high strength, low alloy steel trackhead bolts with national course rolled thread and heavy hex nuts. Steel shall meet ANSI/AWWA C111/A21.11 composition specifications.

W4-07 ADAPTERS

All flange by mechanical joint (FL x MJ) adapters shall be ductile iron.

W4-08 BOLTS IN PIPING

Bolts shall be malleable iron, Cor-ten, or stainless steel.

Bolts and nuts for flanged pipe and fittings shall conform in size and length with ANSI/AWWA C115/A21.15. T-bolts shall be malleable iron or Cor-ten in accordance with ANSI/AWWA C111/A21.11. Stainless steel bolts shall meet the requirements of ASTM A-307, Grade A. Shackle rods, nuts and washers shall be hot-dipped galvanized in accordance with AASHTO M 232 and coated thoroughly with asphaltic material.

Stainless steel nuts, bolts and washers shall be type 304.

W4-09 FLANGE GASKETS

Gasket Material shall be neoprene, Buna N, chlorinated butyl, or cloth inserted rubber.

W4-10 GATE VALVE

The minimum requirements for all gate valves, 2" to 12", shall, in design, material and workmanship, conform to the Standards of AWWA C509.

Buried gate valves shall be iron body, bronze mounted, resilient seat, non-rising stem, suitable for installation with the type and class of pipe being installed. Ends to be as specified. Operating stems shall be equipped with standard two (2) inch operation nut, and O-ring stem seals. Valves not buried shall be as specified.

W4-11 VALVE BOX

Valve Box shall be cast iron, two-piece, 8" or 18" slip type top section with flange located within 3" of top, with 24" bottom section (and extension, if required), equal to RICH - Seattle Type. Valve box lid shall be cast iron, 3 2" deep, with recessed lifting handle, and the word "WATER" or "WW" cast into it.

Valve box paving risers shall be cast iron suitable for H-20 traffic loading. The riser shall have four lugs or a flange around the perimeter, and be sized to fit into a RICH - Seattle Type valve box top.

Valve box adjusting sleeves (for use in unimproved areas) shall be cast iron, 12" long.

All castings shall be coated with asphaltic varnish.

W4-12 VALVE OPERATING NUT EXTENSION

Use where valves are installed more than 3' below finished grade. Extensions are to be a minimum of

1' with only one extension per valve. See Standard Detail.

W4-13 BUTTERFLY VALVE

Butterfly valves shall conform to ANSI/AWWA C504, Class 150B. Valves in chambers shall have a manual handwheel operation. Buried valves shall have a stem extension with AWWA 2-inch operating nut and suitable valve box.

W4-14 CHECK VALVE

Check valves shall be for 150 psi working pressure, unless otherwise specified. Valve shall have adjustable tension lever and spring to provide non-slamming action under all conditions unless otherwise specified.

W4-15 AIR AND VACUUM RELEASE VALVE

Combination Air Valves shall be of the single housing style that combines the operating features of both an Air/Vacuum and Air Release Valve.

The Air/Vacuum portion shall automatically exhaust large quantities of air during the filling of the pipeline and automatically allows air to re-enter the pipeline when the internal pressure of the pipeline approaches a negative value due to column separation, draining of the pipeline, power outage, pipeline break, etc.

The Air Release portion shall automatically release small pockets of air from the pipeline while the pipeline is in operation and under pressure.

The Combination Air Valve shall have minimum 1" NPT inlet and outlet connections and be able to withstand a working pressure of 300 PSI.

The valve body and cover shall be cast iron with stainless steel float.

W4-16 PRESSURE REDUCING STATION

Unless otherwise shown on the construction plans, a standard pressure reducing station shall have a 6" pressure reducing valve with flanged ends and a bypass with a 2" pressure reducing valve with threaded ends. Pressure reducing valves shall have opening/closing speed controls, epoxy coated body, and valve position indicator. Pressure reducing valves (excluding pressure relief valve), 3" and smaller, shall be equipped with stainless steel trim (seat, stem, and cover bearing). If the differential pressure will exceed 80 psi, the larger pressure reducing valve shall also be equipped with

stainless steel trim. Pilot controls shall be on the side of the pressure reducing valve facing vault interior. Each pressure reducing valve shall include two 3/8" test cocks located on the opposite side of valve body from the pilot controls (one at inlet and one at outlet end of valve).

Strainers shall be installed on the inlet side of each pressure reducing valve with bronze ball valve sized to correspond with the strainer blow-off outlet size. A 2" pressure relief valve with threaded ends shall be installed on the discharge side of the 2" pressure reducing valve line and vented to atmosphere as shown on the plans.

The pressure reducing valve shall maintain a constant downstream pressure regardless of varying inlet pressure. The valve shall be a hydraulically operated diaphragm-actuated, globe valve. The pilot control shall be a direct-acting, adjustable, spring loaded, normally open, diaphragm valve, designed to permit flow when controlled pressure is less than the spring setting. The control system shall include a fixed orifice.

The pressure relief valve shall maintain constant upstream pressure by by-passing or relieving excess pressure, and shall maintain close pressure limits without causing surges. The main valve shall be hydraulically operated, diaphragm-actuated, globe valve. The pilot control shall be a direct acting, adjustable, spring loaded, diaphragm valve, designed to permit flow when controlling pressure exceeds spring setting. The pilot control system shall operate such that as excess line pressure is dissipated the main valve shall gradually close to a positive, drip-tight seating.

All diaphragm-actuated valves shall contain a resilient, synthetic rubber disc, having a rectangular cross-section, contained on three and one-half sides by a disc retainer and forming a tight seal against a single removable seat insert. The diaphragm assembly containing a valve stem shall be fully guided at both ends by a bearing in the valve cover and an integral bearing in the valve seat. This diaphragm assembly shall be the only moving part and shall form a sealed chamber in the upper portion of the valve, separating operating pressure from line pressure. The diaphragm shall consist of nylon fabric bonded with synthetic rubber and shall not be used as a seating surface. Packing glands and/or stuffing boxes are not permitted and there shall be no pistons operating the valve or pilot controls. All necessary repairs shall be possible without removing the valve from the line.

Strainers shall be iron bodied "Y" type equal in size to corresponding pressure reducing valve. Strainer shall feature bolted cover machined to hold screen securely in place and tapped F.I.P.T. for blow-off outlet. Screen shall be constructed from perforated stainless steel. Wire mesh screens will not be allowed. Main-line strainer shall have flanged-ends and bypass strainer shall have threaded ends.

The vault shall be equal to Utility Vault Co. model 777-LA with cover as specified in the Standard Detail. Vault exterior shall be coated with coal tar enamel, or equal. Vault interior shall not be coated.

W4-17 CITY-FURNISHED INDIVIDUAL PRESSURE REDUCING VALVE (RESIDENTIAL)

Individual pressure reducing valve shall be direct-acting piston type with integral strainer and bypass. Valve body shall be bronze with threaded outlet end and integral union on inlet end. Valve shall be line-sized with spring range from 25 to 75 psi.

All other appurtenances shall be as shown in the Standard Detail.

W4-18 CITY-FURNISHED INDIVIDUAL PRESSURE REDUCING VALVE (MULTI-FAMILY OR COMMERCIAL)

Individual pressure reducing valve shall be equipped with a pressure relief valve at the discharge side, unless otherwise shown in the plans. Unless otherwise directed by the engineer, the contractor shall construct the pressure reducing valve assembly in accordance with the Standard Detail.

Individual pressure reducing valve shall be direct-acting piston type with integral strainer and bypass. Valve body shall be bronze with threaded outlet end and integral union on inlet end. Valve shall be line-sized with spring range from 25 to 75 psi.

The pressure relief valve shall be a 3/4" hydraulically or pneumatically operated, diaphragm actuated globe valve. It shall be direct-acting, adjustable, spring loaded and designed to permit flow when pressure exceeds the spring setting. Spring range shall be from 20 to 200 psi.

All other appurtenances shall be as shown in the Standard Details.

W4-19 FIRE HYDRANT

Fire Hydrants shall have a minimum valve opening of five and one-quarter (5-1/4") inch "O" ring stem seal, two - two and one half (2 - 2 2") inch N.S.T. hose nozzle connections, and one-four (1-4") inch pumper connection with City of Seattle standard threads. The shoe connection shall be six-inch mechanical joint with lugs. The operating nut is one and one-quarter (1-1/4") inch pentagonal. Hydrants shall be as shown in the approved materials list, with no exceptions unless approved by the Engineer. All hydrants shall be of the "Traffic Model" type with approved break-away features and brass to brass sub-seat.

W4-20 HYDRANT GUARD POSTS

Hydrant guard posts shall be 6" diameter concrete filled ductile iron pipe class 52, 6 feet long. Pipe shall be painted with two (2) coats of Rust-Oleum high gloss white paint.

W4-21 METER SETTER

Meter setters shall have double purpose couplings, unless otherwise specified, and angle meter valve with drilled wings for padlock, twelve (12") inches high. The angle copper setter for the size meter to be installed, see Standard Details.

1 2" meter setters shall have vertical inlet and outlet tees with 1" lateral bypass, flanged ball meter valves on inlet and outlet, ball valve on bypass, and padlock wings on all valves, see Standard Details.

2" meter setters shall have vertical inlet and outlet tees with 1" lateral bypass, flanged ball meter valve on inlet, flanged key meter valve on outlet, ball valve on bypass, and padlock wings on all valves, see Standard Details.

W4-22 CORPORATION STOP

Corporation stops shall be brass in accordance with AWWA Standard C800 with AWWA tapered thread (CC) inlet by compression fitting for copper outlet, complete with coupling nut for copper service.

Corporation stops for 1" tap shall be either the plug-type or ball valve type. Corporation stops for 1 2" and 2" tap shall be the ball valve type.

W4-23 METER BOX

Concrete and steel diamond plate frame meter boxes shall be complete with lid as specified in the Standard Details.

W4-24 COPPER SERVICE PIPE

All copper pipe for underground water service 2" or less shall be seamless conforming to ASTM B88 (ANSI H33.1) Type "K" annealed tubing.

Copper service pipe 2 2" or larger shall be Type K hard drawn, 20' lengths.

W4-25 PLASTIC SERVICE PIPE

Plastic service pipe shall be used only to re-connect portion of existing polyethylene service line; otherwise reconnection of service line from watermain to water meter shall be copper pipe. All joints with plastic pipe shall be made utilizing stainless steel inserts along with couplings or adapters.

Materials: Pipe shall be manufactured from ultrahigh molecular weight, high density polyethylene resin PE 3408. It shall meet the requirements of Type III, Class C,

Category 5-P34 polyethylene as defined by ASTM specification D-1248 "Polyethylene Plastics Molding material, and pipe shall conform to product standard 11-70 or ASTM-D-2239.

Marking: Pipe shall be permanently imprinted with manufacturer's brand name, pipe size, product standard (pipe only), identification of the NSF approval, ASTM specification, recommended working pressure, and production code. Letters shall be at least 3/16 in. high and should appear on the pipe at intervals no less than every 24 inches.

Dimensions: Pipe dimensions and tolerances shall correspond with the values listed in U.S. Department of Commerce PS-11-70 or ASTM-D-2239 for flexible plastic pipe with a standard dimension ratio (SDR) of 7. I.P.S.

Working Pressure: Pipe shall have working pressure of 200psi at 73.4 F.

Plastic service pipe shall be Drisco pipe 5100 ultra line or approved equal.

W4-26 PIPE INSULATION

All pipe for above ground service shall have 2-inch thick foam insulation with an aluminum jacket. Foam insulation and aluminum jacket shall conform to the following:

Foam insulation shall be closed cell polystyrene foam manufactured by extrusion process. Foam insulation shall be odorless, chemically inert, with no food value and shall be resistant to ground chemicals and microorganism. Foam insulation shall conform to the following properties:

PROPERTIES	ASTM TEST	AVERAGE
Thermal Conductivity "K" Factor BTU HR./SQ. FT./+F/IN. Mean Temp. 40+	C518-70 & C177-63	0.23
Moisture Resistance Water Absorption % By Volume	D2842-69	0.8
Water Vapor Transmission (Parm-Inch)	C355-64	0.9
Physical Density (lb./cu. ft.)	C303-56	1.8
Compressive Strength (PSI) Perpendicular to Board Face (5% Deflection or Yield)	D1621-64	40

Aluminum jacketing shall be manufactured from Type 3003 or 5005 alloy; temper of H-14 gauge 0.016.

W4-27 CONCRETE BEDDING & BLOCKING

Bedding, blocking, encasement, or slope anchor concrete shall be mixed from materials acceptable to the Engineer and shall have a 30-day compressive strength of not less than 2,500 psi. The mix shall contain five (5) sacks of cement per cubic yard and shall be of such consistency that the slump is between 1 inch and 5 inches. All concrete shall be mechanically mixed.

W4-28 JOINT RESTRAINT

Joint restraint methods shall be as per the approved materials list. Where shackle restraint is used, all parts shall be hot-dipped galvanized.

W4-29 REDUCED PRESSURE BACKFLOW ASSEMBLY

All Reduced Pressure Backflow Assemblies shall be as listed on the most current copy of "Accepted Cross-Connection Control Assemblies" published by Washington State Department of Health (D.O.H.). The assembly shall include a tightly closing resilient seated shut-off valve on each end of the body and each assembly shall be fitted with four properly located resilient seated test cocks.

All other appurtenances shall be as shown in the Standard Detail.

W4-30 REDUCED PRESSURE BACKFLOW ASSEMBLY WITH DETECTOR

This assembly shall include a line-sized D.O.H. approved (listed on the most current copy of "Accepted Cross-Connection Control Assemblies" published by Washington State D.O.H.) Reduced Pressure Backflow Assembly with a parallel 3/4" meter and 3/4" D.O.H. approved Reduced Pressure Backflow Assembly. Each assembly shall include a tightly closing resilient seated shut-off valve on each end of the body and each assembly shall be fitted with four properly located resilient seated test cocks.

All other appurtenances shall be as shown in the Standard Detail.

W4-31 DOUBLE CHECK VALVE ASSEMBLY

All Double Check Valve Assemblies shall be as listed on the most current copy of "Accepted Cross-

Connection Control Assemblies" published by Washington State D.O.H. The assembly shall include a tightly closing resilient seated shut-off valve on each end of the body and each assembly shall be fitted with four properly located resilient seated test cocks.

All other appurtenances shall be as shown in the Standard Detail.

W4-32 DOUBLE CHECK VALVE ASSEMBLY WITH DETECTOR

This assembly shall include a line sized D.O.H. approved (listed on the most current copy of "Accepted Cross-Connection Control Assemblies" published by Washington State D.O.H.) Double Check Valve Assembly with a parallel 3/4" meter and 3/4" D.O.H. approved double check Valve Assembly. Each assembly shall include a tightly closing resilient seated shut-off valve on each end of the body and each assembly shall be fitted with four properly located resilient seated test-cocks.

All other appurtenances shall be as shown in the Standard Detail.

W4-33 BACKFLOW DEVICE RESILIENT SEATED SHUT-OFF VALVES

Each valve shall be marked with model number with designation of resilient seat; such as "RS" or "R", which must be cast, molded, or affixed onto the body or bonnet of the valve. All ferrous-bodied valves shall be coated with a minimum of 4 mls. of epoxy or equivalent polymerized coating. 2" and smaller R.P.B.A.s and D.C.V.A.s shall use ball valves, and all 2-1/2" and larger R.P.B.A.s and D.C.V.A.s shall use resilient seated gate valves for domestic supply and resilient seated O.S. and Y. valves for firelines.

The minimum requirements for all resilient seated gate valves shall, in design, material and workmanship, conform to the standards of AWWA C509.

W4-34 BARRIER FENCE

Barrier Mesh shall be manufactured from Low Density Polyethylene, stabilized against UV degradation, and with a special selection of pigments to ensure optimum visual performance under harsh weather conditions.

Barrier Mesh shall be corrosion-free and resistant to salt water and most chemicals.

Barrier Mesh shall present a visual target area of approximately 0.5 square meter per square meter of mesh.

W4-35 GRAVEL

A. Bedding material shall be as specified in Section 9-03.15 "Bedding Material for Rigid Pipe" of the Standard Specifications.

B. Foundation gravel shall be as specified in Section 9-03.9(1) "Ballast" of the Standard Specifications.

C. Select Trench Backfill shall be as specified in Section 9-03.12(3) "Gravel backfill for Pipe Bedding" of the Standard Specifications.

D. Crushed surfacing shall be as specified in Section 9-03.9(3) "Crushed Surfacing" of the Standard Specifications.

E. Common borrow shall be provided by the Contractor from an approved borrow site, and shall consist of a natural low plasticity material, free from large cobbles, excess moisture, lumps of clay, wood pieces and shall be suitable and satisfactory material for the construction embankments, subgrade, ditches or shoulder and other facilities.

F. Use of recycled concrete for crushed surfacing base course (1 1/4" minus) material is encouraged; provided that it is not used as a final surface finish.

   Recycled concrete shall meet the requirements for crushed surfacing base course material set forth in Section 9-03.9(3) "Crushed Surfacing" of the Standard Specifications.

   Manufacturers recovering concrete from sources other than concrete roadways, sidewalks, and slabs shall provide certification that the material supplied is free of contaminants.

   Use of recycled concrete for crushed surfacing top course material (5/8" minus) is not allowed.

W4-36 STEEL CASING

Steel casing shall be black steel pipe conforming to ASTM A53.

Casing wall thickness shall be 0.250 inch for casings 24 inches or less in diameter and 0.375 inch for casings over 24 inches in diameter.

Carrier pipe for water shall be Ductile Iron, Class 52.

W4-37 CASING SPACER

Casing spacer shell shall be manufactured in two pieces from heavy gauge T-304 stainless steel or 14 gauge hot rolled pickled steel joined with ribbed flanges. The shell shall be lined with a PVC liner 0.090 inch thick with 85-90 durometer.

Carbon steel casing spacer shell and risers shall be coated with a heat fused PolyVinyl chloride coating, or hot-dip galvanized.

PolyVinyl Chloride Coating Specifications:

Durometer - Shore A2 (10 Sec.) (ASTM D1706-61T)	-	80
Max. operating temperature (constant)	-	150E (65EC)
Electrical properties (ASTM D149-61)(short time .010")	-	1380 V/Mil

Resistance:

Salt spray (ASTM B117)	-	Excellent
Acids	-	Good
Alkalies	-	Good

All nuts and bolts shall be 18-8 stainless steel.

Runners shall be supported by risers made from heavy gauge T-304 stainless steel or 12 gauge hot rolled pickled steel.

Runners shall be ultra high molecular weight polymer with high resistance to abrasion and sliding wear.

TYPICAL DATA			
PROPERTY	**ASTM METHOD**	**UNITS**	**VALUE**
Specific Gravity	D-792	gm/cc	.934
Tensile Strength (Break)	D-638	PSI	3500
Elongation (Break)	D-638	%	380
Izod Impact	D-256	Ft.lbs/in. of notch	No break
Hardness	D-2240	Shore D	67
Coefficient of Friction	D-1894	-	0.11 - 0.13
Heat Distortion Temp.66 PSI	D-648	C	88
Coefficient of Thermal Expansion	D-696	F-1	5.5 x 10-5

ABRASION CHARACTERISTICS

Taber Abrasion	D-1044	Mg/loss	N
Sand Slurry *			7

* Sand slurry condition - 7 hours in one part sand/ one part water slurry at 1725 RPM. Carbon steel - 100, Hifax - 15. The lower the value, the more resistant to abrasion.

Casing spacers shall be "center positioning" type. Height of risers and runners combined shall be sufficient to keep the carrier pipe bell, couplings, or fittings at least 0.75" from the casing pipe wall at all times and provide at least 1" clearance between runners and top of casing wall, to prevent jamming during installation.

W4-38 CONTROLLED DENSITY FILL

Controlled density fill (CDF aka, flowable fill) shall be a mixture of Portland Cement, admixture (optional), FlyAsh, aggregates and water. It shall be proportioned to provide a grouty, non-segregating, free flowing, self-consolidating and excavatable material that will result in a non-settling fill which has measurable unconfined compressive strength.

Materials testing shall be with unconfined compressive test cylinders. Test data may be either

laboratory trial batch test data or field test data.

Alternate mix designs may be required at the Engineer's discretion.

The unconfined compressive strength at 28 days shall be a minimum of 50 psi and a maximum of 100 psi. Material shall be a sand/grout slurry proportioned to be hand-excavatable after long term strength gain.

Materials shall meet the requirements of the following sections of the Standard Specifications:

Portland Cement	9-01
Fine Aggregate for Portland Cement Concrete	9-03.1(2)
Admixture for Concrete	9-23.6
Fly Ash	9-23.9
Water	9-25

Controlled density fill shall meet the following requirements:

Controlled Density Fill

Ingredients	Amount per Cu. Yd.
Portland Cement	50 lb.
Aggregates Class 1 or 2	3300 lb.
Air Entrainment Admixture	Per Manufacturer=s recommendations
Fly Ash Class F	300 lb.
Water	300 lb. (maximum)

The material consistency shall be flowable (approx. slump 3-10 inches). If requested by the Contractor, the proportions may be adjusted with the approval of the Engineer.

CHAPTER W5 - WATER METHODS OF CONSTRUCTION

TABLE OF CONTENTS

W5-01 GENERAL CONSTRUCTION REQUIREMENTS ..... W5 - 1

W5-02 WATER QUALITY ..... W5 - 1

W5-03 LAYING DUCTILE IRON PIPE ..... W5 - 2

W5-04 POLYETHYLENE ENCASEMENT ..... W5 - 2

W5-05 LAYING GALVANIZED IRON PIPE ..... W5 - 3

W5-06 FIRE HYDRANT INSTALLATION ..... W5 - 3

W5-07 VALVE INSTALLATION ..... W5 - 3

W5-08 AIR VACUUM INSTALLATION ..... W5 - 4

W5-09 VALVE BOX MARKER INSTALLATION ..... W5 - 4

W5-10 SERVICE LINES ..... W5 - 4

W5-11 PRESSURE REDUCING STATION ..... W5 - 5

W5-12 CITY-FURNISHED INDIVIDUAL PRESSURE REDUCING VALVE ..... W5 - 5

W5-13 CONCRETE BLOCKING ..... W5 - 6

W5-14 CONNECTION TO EXISTING WATERMAIN ..... W5 - 6

W5-15 ORDER OF CONSTRUCTION ..... W5 - 7

W5-16 HYDROSTATIC TESTS ..... W5 - 7

W5-17 STERILIZATION & FLUSHING OF WATER MAINS ..... W5 - 8

W5-18 PRECONSTRUCTION PHOTOS FOR CITY CONTRACTS ..... W5 - 9

W5-19 UNDERGROUND UTILITIES ..... W5 - 9

W5-20 CONSTRUCTION ON EASEMENTS ..... W5 - 10

W5-21 DUST CONTROL ..... W5 - 10

W5-22 BARRIER FENCE ..... W5 - 10

W5-23 TRENCH EXCAVATION ..... W5 - 10

W5-24 SHEETING & SHORING ..... W5 - 11

W5-25 TRENCH DEWATERING ..... W5 - 11

W5-26 TRENCH BACKFILL AND COMPACTION ..... W5 - 11

W5-27 ADJUST EXISTING STRUCTURE TO GRADE ..... W5 - 13

W5-28 ABANDONING FACILITIES ..... W5 - 14

W5-29 LAWN REMOVAL AND REPLACEMENT ..... W5 - 14

W5-30 BORING UNDER ROOTS ..... W5 - 15

W5-31 HIGHWAY AND RAILROAD CROSSINGS ..... W5 - 15

W5-32 BORING AND JACKING STEEL CASING ..... W5 - 15

W5-33 WORKING WITH ASBESTOS CEMENT PIPE ..... W5 - 16

W5-34 ASBESTOS CEMENT WATERMAIN CROSSINGS ..... W5 - 16

W5-35 CONTROLLED DENSITY FILL ..... W5 - 17

W5-36 VAULT INSTALLATION ..... W5 - 17

W5-37 CLEARANCES/OTHER UTILITIES ..... W5 - 18

CHAPTER W5 - WATER METHODS OF CONSTRUCTION

W5-01 GENERAL CONSTRUCTION REQUIREMENTS

The improvements shall be constructed as shown on the plans and in accordance with these Standards, Standard Details, and Standard Specifications. Manufacturer's equipment shall be installed in compliance with specifications of the manufacturer, except where a higher quality of workmanship is required by the plans and specifications. All materials and work shall be in strict accordance with any applicable regulations of the State, County and local authorities. The Contractor shall arrange for such arrange for such inspection by these agencies as may be required and shall submit evidence of their approval, if requested by the Engineer.

W5-01.1 Alignment & Staking

All work done under a Project shall be to the lines shown on the plans or to approved revisions.

W5-01.2 Inspections & Tests

A. The Engineer shall, at all times, have access to the work for the purpose of inspecting and testing, and the Contractor shall provide proper facilities for such access and such inspection and testing.

B. If any work is covered up without approval or consent of the Engineer, it must, if required by the Engineer, by uncovered for inspection.

C. Before a performance test is to be observed by the Engineer the Contractor shall make whatever preliminary tests are necessary to assure that the material and/or equipment are in accordance with the plans and specifications.

D. Written notice of deficiencies, adequately describing the same, shall be given to the Contractor upon completion of each inspection and the Contractor shall correct such deficiencies within seven days of the notice and before final inspection will be made by the Engineer, unless otherwise approved.

W5-02 WATER QUALITY

The Contractor is required to implement water pollution controls and maintain these until the project is accepted by the City. The Contractor shall familiarize himself with the requirement of the Department of Ecology and other regulatory agencies having jurisdiction over such matters.

The following list of requirements is a summary of the construction activity requirements of the Department of Ecology and is provided as a guide to the Contractor. The Department of Ecology may have additional requirements with which the Contractor shall comply.

W5-02.1 Chlorine Residual from Water Main Testing or Disinfection

Water with chlorine residual shall be disposed of through sanitary sewers, storing and aerating or percolation into the ground. Water containing a chlorine residual shall not be disposed of into the storm drainage system or any waterway.

W5-02.2 Oil and Chemical Storage and Handling

Storage area shall be diked. No disposal of oil products or waste on the site, including oil filters. The Contractor shall provide a waste oil disposal tank, if needed.

W5-03 LAYING DUCTILE IRON PIPE

Work shall be accomplished in accordance with AWWA Standard C600 and the manufacturer's recommendation.

The bottom of the trench shall be finished to grade in such a manner that the pipe will have bearing along the entire length of the barrel. Bolts on mechanical pipe and fittings shall be tightened uniformly with a "Torque" wrench which measures the torque for mechanical joints shall be as follows:

2" - 3" pipe sizes 5/8" Bolts	40 - 60 ft-lbs torque
4" - 24" pipe size 3/4" Bolts	60 - 90 ft-lbs torque

Installation of push-on joint (Tyton) pipe shall be in accordance with the manufacturer's instructions. All buried ductile iron pipe and adjacent valves and fittings shall be encased with 8-mil polyethylene.

W5-04 POLYETHYLENE ENCASEMENT

Installation of Polyethylene Encasement shall be in accordance with the latest AWWA Standard C105. All Ductile iron pipe and fittings shall be wrapped except as specifically excluded on the plans or in these specifications.

W5-05 LAYING GALVANIZED IRON PIPE

The galvanized iron pipe, valves and fittings shall be threaded.

Joints shall be made in accordance with good plumbing practice. Threads shall be coated with Teflon tape before connecting.

W5-06 FIRE HYDRANT INSTALLATION

Fire hydrants shall be set as shown in the Standard Details and AWWA Standard C600. Hydrant and the gate valve must have lugs. The tee on the main line shall not be considered as part of the assembly. The portion of the hydrants above the ground shall be painted with two costs of Rust-Oleum No. 2766 high gloss white paint. The hydrant run shall be restrained with MEGALUG restrainer at M.J. end on hydrant and gate valve. If more than one pipe is required on hydrant run, connect pipes with mechanical joint sleeve and MEGALUG restrainers.
When fire hydrants are located in parking lots, or other areas where permitted speed limits do not exceed five miles per hour, hydrant guard posts shall be installed as follows:

> Hydrant guard post shall be installed in areas where the hydrant is not protected by a cement concrete curb on all sides where vehicles may have access. Guard posts shall be installed according to the minimum dimensions shown in the Standard Details.

W5-07 VALVE INSTALLATION

Before installation, valves shall be cleaned of all foreign material. Such blocking as the Engineer may deem necessary shall be provided. The valve and valve box shall be set plumb with the valve box centered on the valve. The top of the valve box shall be set with all valves except auxiliary valves for hydrants. Where valve operating nut is more than three feet below finished grade, a stem extension conforming to the Standard Detail must be installed. Tapping valves shall be water tested prior to tapping water main.

The top of the valve box base section shall be located a minimum of 6" and maximum of 9" below finished grade. A polyethylene sheet, 8-mils thick, shall be placed between the top and base valve box sections to prevent metal to metal contact where the sections overlap.

Valve box top sections shall be adjusted flush with the finished pavement and, in those areas to be excavated for future roadway grades, enough adjustment shall be provided in the valve box to allow the top of the box to be adjusted to the required grade.

W5-08 AIR VACUUM INSTALLATION

Installation shall be as shown on the Standard Detail.

Iron Piping and fittings shall be galvanized. Location of the air release valves as shown on the plans is approximate. The installation shall be set at the high point of the line. The water line must be constructed so the air release valve may be installed in a convenient location.

W5-09 VALVE BOX MARKER INSTALLATION

Concrete marker posts, painted with two coats Rust-Oleum No. 2766 Hi-Gloss white paint, shall be set for all valves except auxiliary hydrant valves. The marker shall be set on a line through the valve at right angles to the center line of the road. The marker shall generally be set on the property line unless the Engineer decides another location is safer or more conspicuous. Distance to the valves shall be neatly stenciled on the post with 2-inch numerals. Valve markers shall be installed only in unimproved or unpaved areas.

W5-10 SERVICE LINES

W5-10.1 New Service Installations

Service installation shall be as shown on the Standard Details.

Tapping of polyethylene encased ductile iron pipe shall be performed by wrapping three layers of polyethylene compatible adhesive tape completely around the pipe to cover the area where the direct tapping machine and chain will be mounted.

Where a saddle is used in lieu of direct tapping, make a cut in the taped area large enough to accommodate the gasket directly in contact with the ductile iron pipe. Make necessary repair for damaged encasement.

W5-10.2 Reconnecting Existing Services

Install service connections as shown on the Standard Detail and plans. Install services under paving by boring. Bore or tunnel under sidewalks and curbs. Damages shall be repaired by Contractor. Provide 30" minimum cover on service lines. Install service at 90 degrees horizontally to the main to intercept the existing meters. A deviation of not more than 3 degrees will be allowed. Blow off service prior to connection to meter.

Install meter setter and boxes as shown on the Standard Detail and where directed by the Engineer.

Service connections shall not be transferred to the new main until it has been successfully flushed, disinfected and tested. When transferring services from the existing main to the new main, the Contractor shall take sanitary precautions to protect the potable water supply in both the existing and new mains.

The Contractor shall submit for approval a sketch and a list of proposed bushings, adapters, etc. The sketch shall show proposed fittings, (by brand name) for single meter hookups, and connection to existing copper and plastic pipe of various diameter. Multi-meter hook-ups are not allowed, when existing multi-meter hook-ups are encountered, the Contractor shall convert them to single meter hook-ups.

All new service line shall be soft annealed copper. Plastic pipe shall not be allowed

except to reconnect portions of existing polyethylene service line, otherwise service line shall be copper from watermain to water meter.

No reconnection to sub-standard service lines shall be allowed.

Substandard plastic service pipe is usually 80 psi polyethylene pipe. The Engineer shall decide if existing service lines are substandard.

W5-11 PRESSURE REDUCING STATION

The pressure reducing valves, strainers, pressure relief, pipes and fittings shall be constructed in accordance with the applicable AWWA and uniform plumbing code requirements. Pressure reducing valves, 6" and larger, shall be supported by a pipe stanchion. Stanchion shall be bolted to vault floor.

Pressure relief discharge pipe shall be placed in location that will not be subject to damage or erosion during discharge of water.

W5-12 CITY-FURNISHED INDIVIDUAL PRESSURE REDUCING VALVE

Individual pressure reducing valve assembly shall be installed on the discharge side of the existing water meter, and shall be contained inside a new water meter box. Each pressure reducing valve shall be installed, as shown in the plans Standard Detail, in accordance with the latest edition of the uniform plumbing code, and as described in these specifications or as directed by the engineer. All excavation shall be made manually to minimize disturbance of the surrounding areas.

All improved areas disturbed by construction shall be restored to its original condition or better in accordance with these specifications.

Before attempting to make any cut into the existing service line the contractor shall make sure that necessary fittings and connectors are available in order to avoid a prolonged shut-off water service. Existing service lines consist of copper tubing, polyethylene pipe, galvanized iron pipe or PVC pipe.

Contractor shall notify the property owners or property managers 48 hours in advance prior to installation of pressure reducing valve assembly. Water shut-off affecting business establishments shall be performed after business hours.

When not installed through a developer extension or City capital improvement project, the developer, or builder, shall install necessary individual pressure reducing valves in conformance with the uniform plumbing code.

W5-13 CONCRETE BLOCKING

All bends and tees and valves shall be blocked in accordance with the Standard Details. All poured in place blocking shall have a minimum measurement of twelve inches (12") between the pipe and the undisturbed bank. The Contractor shall install blocking which is adequate to withstand full test pressure, as well as, to continuously withstand operating pressures under all conditions of service. All concrete shall be mechanically mixed.

W5-14 CONNECTION TO EXISTING WATERMAIN

Points of connection to existing water mains shall be exposed prior to trenching of the new line, and not less than 48 hours prior to the anticipated connection time. The contractor shall notify the Utility 48 hours in advance prior to any watermain shut-off or connection. Watermain shut-offs shall not be scheduled to take place on Fridays, or on the day before a City holiday, unless otherwise approved by the Utility. The Contractor shall ensure that the existing fittings are in accordance with the Contract Plans and that the connection can be made in accordance with the Contract Plans. The Contractor shall immediately notify the Engineer if the connection cannot be made in accordance with the plans in order that the connection detail may be revised.

Connection to the existing main shall take place only after the new main is flushed, disinfected, and satisfactory bacteriological sample results are obtained. An approved backflow prevention assembly shall be installed between the existing and new water lines during disinfection and flushing of new main. All connections to the existing system and all testing of the new line must be with the authorization of, and in the presence of, the authorized representative of the Utility. Opening and closing of valves, and use of water from the City's system will be done only by the Utility. The backflow preventer and supply hose must be disconnected during hydrostatic pressure testing of new main.

Connections may be made to existing pipes under pressure with a tapping machine by determining the size and type of pipe and installing tapping tee to fit complete with tapping gate valve. Tapping tees shall be installed as shown on the Standard Details. Where cut-ins are permitted to be made in existing pipes, the work shall be conducted at such a time and in such a manner as to minimize the interruption of service. Cut-in time must be approved by the Utility. Necessary pipe, fittings and gate valves shall be assembled at the site ready for installation prior to the shutting-off of water in the existing main. Once the water has been shut off, the work shall be prosecuted vigorously and shall not be halted until the line is restored to service. The interiors of all pipe and fittings to be used in final connection shall be swabbed or sprayed with a 1% available chlorine solution.

Unless specifically provided for elsewhere in these specifications, the Contractor shall have the responsibility of giving at least forty-eight (48) hours notice to the Utility and affected water customers of intention to disrupt service.

W5-15 ORDER OF CONSTRUCTION

Restoration of trenches shall closely follow installation and testing of pipe. The Engineer will inspect and observe the hydrostatic test of the pipe within 24 hours after notification by the Contractor that a section is ready for inspection and test. The Contractor shall contact the Engineer at least 24 hours in advance of the completion of sterilization and flushing and his representative shall be present when the Engineer takes water samples.

W5-16 HYDROSTATIC TESTS

Prior to the acceptance of the work, the installation shall be subjected to a hydrostatic pressure test of 200 psi for 15 minutes at the high point in the line and any leaks or imperfections developing under said pressure shall be remedied by the Contractor before final acceptance of the work. No air will be allowed in the lines. The mains shall be tested between valves. Insofar as possible, no hydrostatic pressure shall be placed against the opposite side of the valve being tested. Test pressure shall be maintained while the entire installation is inspected. The Contractor shall provide all necessary equipment and shall perform all work connected with the test. Tests shall be made after all valved connections have been made. At unvalved connection points, a temporary plug (or 2" blow-off assembly on lines without hydrants) shall be installed at the end of the new main. This shall include concrete blocking necessary to withstand pressures encountered during the hydrostatic test.

Once the new line is successfully tested and disinfected, the plug (blow-off) shall be removed and the connection to the existing main completed. Insofar as it is practical, tests shall be made with pipe joints, fittings and valves exposed for inspection. For approval, pressure shall not drop more than 10 psi for 15 minutes. The Contractor shall perform the test to assure that the equipment to be used for the test is adequate and in good operating condition, and the air in the line has been released before requesting the Engineer to witness the test. The Engineer shall witness the test; if the test does not pass inspection for any reason, additional trips required to witness the test shall be done at the Contractor's expense.

The contractor shall provide special plugs and blocking necessary in those locations where it would be necessary to test against butterfly valves to insure that the pressure ratings of these valves is not exceeded during testing.

W5-17 STERILIZATION & FLUSHING OF WATER MAINS

Sterilization of water mains shall be accomplished by the Contractor in accordance with the requirements of the Washington State Department of Health and in a manner satisfactory to the Engineer. The section to be sterilized shall be thoroughly flushed at maximum flow established by the Engineer prior to chlorination. Flushing period must be approved by the City. Sections will ordinarily be sterilized between adjacent valves unless, in the opinion of the Engineer, a longer section may be satisfactorily handled. Chlorine shall be applied by solution feed at one end of the section with a valve or hydrant at the opposite end open sufficiently to permit a flow through during chlorine application. The chlorine solution shall be fed into the pipeline already mixed by an automatically proportioning applicator so as to provide a steady application rate of not less than 60 ppm chlorine. Hydrants along the chlorinated section shall be open during application until the presence of chlorine has definitely been detected in each hydrant run. When a chlorine concentration of not less than 50 ppm has been established throughout the line, the valves shall be closed and the line left undisturbed for 24 hours.

As an alternative, the Contractor may use granulated chlorine. Granulated chlorine (dry calcium hypochlorite at 65% - 70% chlorine) shall be placed in the pipe to yield a dosage of not less than 50 ppm. The number of ounces of 65% test calcium hypochlorite required for a 20-foot length of pipe equals .00843ld, in which "d" is the diameter in inches. The line shall then be thoroughly flushed and water samples taken for approval by the local health agency. Flushing period must be approved by the City. The Contractor shall exercise special care in flushing to avoid damage to surrounding property and to conform with Section W5-01 WATER QUALITY.

Should the initial treatment result in an unsatisfactory bacteriological test, additional chlorination using the first procedure shall be repeated by the Contractor until satisfactory results are obtained. The Contractor shall be responsible for disposal of treated water flushed from mains and at no time shall chlorinated water from a new main be flushed into a body of fresh water. This is to include lakes, rivers, streams, storm drainage systems, and any and all other waters where fish or other natural water life can be expected. Disposal may be made to any available sanitary sewer provided the rate of disposal will not overload the sewer.

W5-18 PRECONSTRUCTION PHOTOS FOR CITY CONTRACTS

Before commencing any construction work as described in the plans and specifications, the Contractor shall provide photographs of pre-existing conditions of the area that will be disturbed during construction operations. Photographs will be obtained as follows:

1. Every 25 feet interval in easements.

2. Every 50 feet interval in paved areas.

3. And any other location as directed by the Engineer.

The photographs shall be taken with a 35mm camera, developed in 5" x 7" color prints, contained in

albums, catalogued, and cross-referenced.

W5-19 UNDERGROUND UTILITIES

The plans show the approximate locations of various existing utilities known to the engineer, such as gas lines, water mains, storm drainage, power lines, telephone lines, television cables, and other obstructions based on information obtained from various sources. This information is not guaranteed to be accurate, and the Contractor is directed to check for interferences and obstructions by inquiry from the different utilities and by underground exploration ahead of his regular excavation.

The Contractor shall request field locates and notify the owners of underground facilities about the scheduled commencement of excavation through a one-call number (1-800-424-5555).

If the Utility is not included in the one-number locator service, notice shall be provided individually to those owners of underground facilities known to or suspected of having underground facilities within the area of proposed excavation.

Notice shall be made to owners of underground utilities not less than two (2) business days or more than ten (10) business days prior to scheduled date of commencement of excavation.

The Contractor shall excavate around and under service pipes with special care and shall support and maintain them in service. Where it is necessary to cut, move or reconnect any service lines, arrangements shall be made with the respective utility.

W5-20 CONSTRUCTION ON EASEMENTS

All work on easements shall be performed strictly in accordance with easement provisions. Easements shall be restored equal to or better than original condition. The Contractor shall do no work on easement areas until specifically authorized by the Engineer.

W5-21 DUST CONTROL

The contractor shall sprinkle water as necessary to keep the dust down. This sprinkling shall be maintained until the project is accepted. Sprinkling shall be kept to a minimum and shall not produce runoff from the site. On paved streets, if dust becomes a nuisance when backfilling is completed, the Contractor shall vacuum sweep the portions of streets being used for traffic. Flushing of streets shall not be permitted without prior City approval.

W5-22 BARRIER FENCE

Where indicated on the Plans, a bright orange safety fence shall be placed parallel to the silt fence, 2 feet nearer to the construction activity. Minimum fence material height shall be 2 feet. Top of fence shall be located 3 feet above ground.

The barrier fence shall be supported as recommended by the manufacturer and as directed by the Engineer.

W5-23 TRENCH EXCAVATION

Before commencement of trenching provide mini-gabions for all downhill storm drain catch basins per City of Bellevue standard for temporary sediment trap at curb inlet. Plastic sheeting must be available on-site. In case of rain any stockpiled material must be covered and secured.

Clearing and grubbing limits may be established by the Engineer for certain areas and the Contractor shall confine his operations within those limits. Debris resulting from the clearing and grubbing shall be disposed of by the Contractor.

Trenches shall be excavated to the line and grade designated by the Engineer and in accordance with the Standard Details. Trenches shall comply with OSHA and WISHA requirements regarding worker safety. The trench width at the top of the pipe shall be 30 inches for pipe up to and including 12 inch inside diameter and the outside diameter of the pipe barrel plus 16 inches for pipe larger than 12 inch inside diameter. Where higher strength pipe or special bedding is required because of excess trench width, it shall be furnished.

The trench shall be kept free from water until joining has been completed. Surface water shall be diverted so as not to enter the trench. The Contractor shall maintain sufficient pumping equipment on the job to insure that these provisions are carried out. The Contractor shall perform all excavation of every description and of whatever substance encountered as part of his trench excavation cost. Unsuitable material below the depth of the bedding shall be removed and replaced with satisfactory materials as determined by the Engineer.

Trenching operations shall not proceed more than 100 feet in advance of pipe laying except with written approval of the Engineer.

When trenching operations take place in the public right-of-way, the pavement, and all other improvements, shall be restored as required by the Right-of-Way Use Permit.

W5-24 SHEETING & SHORING

The Contractor shall provide and install sheeting and shoring as necessary to protect workmen, the work and existing utilities and other properties in compliance with OSHA and WISHA requirements. All sheeting and shoring above the pipe shall be removed prior to backfilling. Sheeting below the top of the pipe may be cut off and left in place.

Removal of the sheeting and shoring shall be accomplished in such a manner that there will be no damage to the work or to the other properties.

W5-25 TRENCH DEWATERING

When water is encountered to a degree that a successful trenching and pipe laying operation is hampered, dewatering will be the responsibility of the Contractor. Determination of the method to be used to dewater trenched areas will be the responsibility of the Contractor, but any method used must be in accordance with the specifications and requirements of the Washington State Department of Ecology and the Local Jurisdiction.

W5-26 TRENCH BACKFILL AND COMPACTION

All backfill material shall be free from cinders, ashes, refuse, vegetable or organic material, boulders, rocks or stones, frozen soil, or other unsuitable material. Compaction of the backfill shall, at the minimum, meet the requirements of the Governmental Agency having final jurisdiction.

Backfill shall not be deposited in the trench in any manner which will damage or disturb the pipe or the initial backfill. Compaction of the backfill may be obtained by jetting or by tamping, rolling or otherwise, as specified by the Engineer. The Contractor shall provide the services of a testing laboratory acceptable to the Engineer to perform in place density tests to show that the specified density has been obtained. The approval of the compaction method and the achievement of the specified density shall, in no way, relieve the Contractor of responsibility for all repairs caused by settlement of the backfill prior to acceptance and during the one-year period after acceptance of the project.

Where the excavated materials has a California Bearing Ratio for compacted and soaked sample of less than seven (7) or, for other reasons, cannot be compacted as specified, the Contractor shall replace the excavated material with approved imported gravel.

Compaction of backfill material may be accomplished by mechanical tamper, by vibrating, by jetting or by a combination of these methods, as approved by the Governmental Agency having jurisdiction and the Engineer.

Unless otherwise provided, compaction of backfill shall meet the following requirements:

Paved Areas

A. Trench restoration shall be either by a patch or overlay method as required and noted on the permit. When a patch method is used the trench limits shall be sawcut prior to the final patch.

B. All trench and pavement cuts shall be made by sawcuts. The sawcuts shall be a minimum of 1 foot (1') outside the trench width. If the permit requires an overlay then the Contractor may use a jackhammer for the cutting of the existing pavement.

C. All trenching shall be backfilled with either crushed surfacing materials conforming to Section 4-04 of the Standard Specifications, pit run, or suitable native material. All trench backfill materials shall be compacted to ninety-five percent (95%) maximum dry density, as determined by ASTM D-1557, as described in Section 2-03 of the Standard Specifications.

If the existing material is determined by the Engineer to be suitable for backfill, the Contractor may use the native material.

When the trench is perpendicular to the traveled lane or any driveways, the full depth shall be backfilled with crushed surfacing top course material. When the trench is parallel, only the top 4-feet must be backfilled with crushed surfacing top course material.

Backfill compaction shall be performed in 8 to 12 inch lifts. The Developer shall perform compaction tests in four foot (4') increments maximum. The test results shall be given to the Engineer for review and approval prior to paving. Tests shall be performed at maximum intervals of 50 feet along the length of the trench.

Unimproved Areas

The backfill shall be compacted to a minimum of ninety percent (90%) of maximum dry density, as determined by ASTM D-1557. The Contractor shall provide such drainage facilities as are necessary to prevent erosion of the backfill.

W5-27 ADJUST EXISTING STRUCTURE TO GRADE

W5-27.1 Vault Cover Adjustment

Existing vault covers affected by a pavement overlay, or adjustment in surface grade, shall be adjusted to grade within three working days.

W5-27.2 Valve Box Adjustment - Pavement Overlays and Sidewalks

A. Raising the existing valve box cover less than 2" shall be accomplished by adjusting the existing top section of the valve box.

B. Raising the existing valve box cover 2" or more, shall be accomplished by either adjusting the existing top section or by inserting a valve box paving riser into the existing valve box top. The paving riser shall be epoxied to the valve box.

C. If the valve box base section needs to be extended, the contractor shall install a 4" diameter cast iron soil pipe, with bell-end of the soil pipe inserted over the top of the existing valve box base section. The spigot-end of the soil pipe shall be located a minimum of 6" and maximum of 9" below finished grade. The valve box top section shall be slipped over the soil pipe and adjusted to final grade. A polyethylene sheet, 8-mils thick, shall be placed between the valve box and soil pipe to prevent metal to metal contact where the sections overlap.

Final box adjustment shall leave the top of the valve box no higher than final grade, and no lower than 0.5" below final grade.

In asphalt concrete pavement overlay areas, excavation of the valve box to be raised shall be accomplished by sawcutting or neat-line jackhammering the pavement a minimum of 12" around the perimeter of the valve box.

Final adjustment of valve boxes shall be made within 20 calendar days following the final overlay.

W5-27.3 Valve Box Adjustment - Unimproved Areas

Adjustment of valve box covers located outside paved areas or sidewalks can be accomplished using a 12" valve box adjusting sleeve inserted into the existing valve box top section.

W5-28 ABANDONING FACILITIES

W5-28.1 Abandoning Pipe In Place

The Contractor shall plug the open ends of all pipes, fittings, etc. to be abandoned with end cap coupling on asbestos cement or steel pipe, with mechanical joint cap or plug on cast or ductile iron pipe.

W5-28.2 Abandoning Structures

Abandonment of structures shall be completed only after piped systems have been properly abandoned. Structures within the public right-of-way, a public easement or which are part

of the publicly-owned and maintained system must be:

< removed completely according to Section 2-02 of the current Standard Specifications; or
< abandoned according to Section 7-05.3 of the current Standard Specifications. provided no conflicts with new utilities or improvements arise.

W5-29 LAWN REMOVAL AND REPLACEMENT

Any lawn damaged by the Contractor outside of limits shown on the plan shall be restored to conditions existing prior to construction, contractor shall take care to limit the area of disturbance.

When lawn removal and replacement is called for, a sufficient width (at least 2' wider than outside width of backhoe wheels or tracks) of lawn turf shall be removed prior to beginning excavation so that heavy equipment does not run over the lawn.

The area of the sod to be removed shall be laid out in squares or strips of such size as to provide easy handling and matching. The sod shall then be carefully cut along these lines to a depth of four (4) inches, taking care to keep cuts straight and strips of the same width. After the sod has been cut vertically, it shall be removed to a uniform depth of approximately three (3) inches with an approved type of sod cutter.

This operation shall be performed in such manner as to ensure uniform thickness of sod throughout the operation.

Prior to installation of new sod, the scalped area shall be carefully shaped to proper grade and be thoroughly compacted. Wherever the construction operations have resulted in the placement of unsuitable or poorer soils in the area to be resodded, the surface shall be left low and covered with top soil.

The finished grade, after shaping and compacting the top soil, shall be thoroughly dampened prior to and immediately before replacing the sod. The sod shall be replaced to the required grade, taking care to butt each piece tightly against the adjacent one. Upon completion, the sod shall be dampened and rolled with a lawn roller.
All tools used shall be of the type specially designed for the work and be satisfactory to the Engineer. In no case shall sod be removed by the use of a mattock or other tool which will not meet requirements specified herein.

Sod shall be a 4-way blend of Ryegrasses as grown by J.B. SOD & SEED of Redmond, WA., or equivalent approved by the Engineer.

W5-30 BORING UNDER ROOTS

Boring under the root systems of trees (and plants) shall be accomplished by excavating a trench or

pit on each side of the tree and then hand digging or pushing the pipe through the soil under the tree. The pit walls shall be a minimum of 7 feet from the center of the tree and shall be sufficient depth to lay the pipe at the grade shown on the plan and profile.

W5-31 HIGHWAY AND RAILROAD CROSSINGS

Interstate, state, or county highway and railroad crossings require the placing of steel, cast iron or concrete pipe casing by jacking or tunneling and laying the carrier pipe within the casing.

W5-32 BORING AND JACKING STEEL CASING

The Contractor shall verify the vertical and horizontal location of existing utilities. If required to avoid conflicts and maintain minimum clearances, adjustment shall be made to the grade of the casing.

The pipe shall be bored and jacked where indicated. The Contractor shall remove or penetrate all obstructions encountered. If groundwater is found to be a problem during boring operations, the Contractor shall do all that is necessary to control the flow sufficiently to protect the excavation, pipe and equipment so that the work is not impaired. Any pipe damaged during the boring and jacking operation shall be repaired by the Contractor in a manner approved by the Engineer.

Special care shall be taken during the installation of the bored and jacked pipe to ensure that no settlement or caving be caused to the above surface. Any such caving caused by the placement of the pipe shall be the Contractor's responsibility and he shall repair any area so affected as directed by the Engineer.

During the jacking operations, particular care shall be exercised to prevent caving ahead of the pipe which will cause voids outside of the pipe. If voids exist, the Contractor shall drill through the wall of the pipe and fill the voids with a pumped cement grout. All voids shall be filled to the satisfaction of the Engineer.
The carrier pipe shall be installed in the casing as shown on the drawings. The Contractor shall support carrier pipe with casing spacers as shown in the Standard Detail. The casing pipe shall not be backfilled with sand and grout. The casing ends shall be sealed with asphaltic material 1 foot minimum on each end, or with manufactured rubber end seal device.

Boring pits shall be backfilled with select native material and compacted to 95% maximum dry density as determined by ASTM D-1557. The contractor shall provide sufficient select backfill material to make up for the rejected material.

All disturbed ground shall be restored to its original condition or better.

W5-33 WORKING WITH ASBESTOS CEMENT PIPE

When working with asbestos cement pipe, the Contractor is required to maintain workers' exposure to asbestos material at or below the exposure limit as prescribed in WAC 296-62-07705 State/Federal Guidelines and Certification.

W5-34 ASBESTOS CEMENT WATERMAIN CROSSINGS

Where new utility line crosses below an existing AC main, the AC pipe shall be replaced with DI pipe to 3 feet past each side of trench as shown on the Standard Detail. Alternatively, where directed by the Engineer, the trench shall be backfilled with controlled density fill (CDF, aka flowable fill) from bottom of trench to bottom of the AC main.

W5-35 CONTROLLED DENSITY FILL

Controlled Density Fill (CDF) can be proportioned to be flowable, non-segregating, or excavatable by hand or machine. Desired flowability shall be achieved with the following guidelines:

Low Flowability	below 6-inch slump
Normal Flowability	6 - 8-inch slump
High Flowability	8-inch slump or greater

CDF shall be placed by any reasonable means into the area to be filled.
CDF patching, mixing and placing may be started if weather conditions are favorable, when the temperature is at 34 degrees F and rising. At the time of placement, CDF must have a temperature of at least 40 degrees F. Mixing and placing shall stop when temperature is 38 degrees F or less and falling. Each filling stage shall be as continuous an operation as is practicable. CDF shall not be placed on frozen ground.
Trench section to be filled with CDF shall be contained at either end of trench section by bulkhead or earth fill.

When used to support existing asbestos cement (A.C.) pipe, the flowable CDF shall be brought up uniformly to the bottom of the A.C. pipe, as shown on the plans, or as directed by the Engineer.

Contractor shall provide steel plates to span utility trenches and prevent traffic contact with CDF for at least 24 hours after placement or until CDF is compacted or hardened to prevent rutting by construction equipment or traffic.

W5-36 VAULT INSTALLATION

Vaults for water facilities (pressure reducing station, water service, backflow device, etc.) shall be constructed at the locations shown in the plan and as staked. It shall be constructed as shown in the plans, Standard Details and as directed by the Engineer.

The excavation shall have minimum one (1) foot clearance between the vault outer surfaces and the earth bank. The vault shall be placed on firm soil. If the foundation material is inadequate, the contractor shall use foundation gravel or bedding concrete to support the vault. The vault shall be plumb and watertight. The access cover shall be seated properly to prevent rocking and shall be adjusted to match the finished grade.

Vault floor shall drain to daylight, or to location shown on the plan. Drain pipe shall be minimum 4" diameter.

Where knockout locations for pipe do not coincide with locations of pipe penetrations into the vault, the Contractor shall core drill openings for pipe.

W5-37 CLEARANCES/OTHER UTILITIES

If the minimum vertical distances between utility pipes is less than 6-inches and such installation is approved by the City, a pad shall be placed between the pipes. The pad shall be O.D. x O.D. x 2.5 inches thick minimum or as required to protect the pipes. Above O.D. is equal to the outside diameter of the larger pipe. The pad shall be a polyethylene foam plank (Dow Plastics Ethafoam^{tm} 220), or approved equal. Additional measures may be necessary to ensure system integrity and may be required as evaluated by the City on a case by case basis.

APPENDIX W-1

WATER WORKS STANDARD DETAILS

1. CONCRETE BLOCKING W-1
2. VERTICAL BLOCKING WITH RESTRAINED JOINTS FOR NEW LINES W-2
3. VERTICAL BLOCKING FOR CONNECTING TO EXISTING MAIN W-3
4. CONCRETE SLOPE ANCHOR DETAIL W-4
5. TYPICAL TRENCH DETAIL W-5
6. CASING INSTALLATION W-6
7. TYPICAL A.C. WATERMAIN CROSSING REPLACEMENT DETAIL W-7
8. FILLING NEW WATER MAINS W-8
9. TAPPING TEES W-9
10. VALVE BOX INSTALLATION W-10
11. VALVE OPERATING EXTENSION W-11
12. FIRE HYDRANT ASSEMBLY W-12
13. FIRE HYDRANT GUARD POST & VALVE MARKER POST W-13
14. 2" BLOW-OFF ASSEMBLY W-14
15. 1" AIR & VACUUM RELEASE VALVE ASSEMBLY W-15
16. STANDARD PRESSURE REDUCING STATION W-16
17. PRESSURE REDUCING STATION ACCESS LADDER AND PRESSURE RELIEF DRAIN W-17
18. INDIVIDUAL PRESSURE REDUCING VALVE ASSEMBLY (RESIDENTIAL) . . . W-18

19. INDIVIDUAL PRESSURE REDUCING VALVE ASSEMBLY (MULTI-FAMILY OR COMMERCIAL) W-19

20. INDIVIDUAL PRESSURE REDUCING VALVE ASSEMBLY WITH PRESSURE RELIEF (MULTI-FAMILY OR COMMERCIAL) W-20

21. 1" X 3/4" SINGLE WATER SERVICE OR DOMESTIC IRRIGATION SERVICE (HORIZONTAL METER SETTER) W-21

22. 1" X 3/4" SINGLE WATER SERVICE OR DOMESTIC IRRIGATION SERVICE (VERTICAL METER SETTER) W-22

23. 1"X 1" SINGLE WATER SERVICE OR DOMESTIC IRRIGATION SERVICE (HORIZONTAL METER SETTER) W-23

24. 1" X 1" SINGLE WATER SERVICE OR DOMESTIC IRRIGATION SERVICE (VERTICAL METER SETTER) W-24

25. 1 ½" DOMESTIC WATER SERVICE W-25

26. 1 ½" DOMESTIC WATER SERVICE (C.B.D. & OTHER SENSITIVE AREAS) . . . W-26

27. 1 ½" IRRIGATION OR FIRE SPRINKLER WATER SERVICE W-27

28. 1 ½" IRRIGATION OR FIRE SPRINKLER WATER SERVICE (C.B.D. & OTHER SENSITIVE AREAS) W.28

29. 2" DOMESTIC WATER SERVICE W-29

30. 2" DOMESTIC WATER SERVICE (C.B.D. & OTHER SENSITIVE AREAS) W-30

31. 2" IRRIGATION OR FIRE SPRINKLER WATER SERVICE W-31

32. 2" IRRIGATION OR FIRE SPRINKLER WATER SERVICE (C.B.D. & OTHER SENSITIVE AREAS) W-32

33. 3" TO 6" DOMESTIC METER INSTALLATION W-33

34. 8" DOMESTIC METER INSTALLATION W-34

35. 3" TO 6" IRRIGATION METER INSTALLATION W-35

36. OUTSIDE DCVA INSTALLATION FOR RESIDENTIAL FIRE SPRINKLER SYSTEMS W-36

37. 3/4" TO 2" DOUBLE CHECK VALVE ASSEMBLY FOR IRRIGATION OR FIRE SPRINKLER SYSTEMS (OUTSIDE INSTALLATION) W-37

38. INSIDE DCVA INSTALLATION FOR RESIDENTIAL FIRE SPRINKLER SYSTEMS W-38

39. DOUBLE CHECK VALVE ASSEMBLY (INSIDE INSTALLATION) W-39

40. OUTSIDE DCVA INSTALLATION FOR 1 ½" AND 2" COMMERCIAL FIRE SPRINKLER SYSTEMS W-40

41. 1 ½" AND 2" DOUBLE CHECK VALVE ASSEMBLY FOR CONTINUOUS SUPPLY (OUTSIDE INSTALLATION) W-41

42. 3" TO 6" DOMESTIC DOUBLE CHECK VALVE ASSEMBLY FOR CONTINUOUS SUPPLY (OUTSIDE INSTALLATION) W-42

43. 8" AND 10" DOMESTIC DOUBLE CHECK VALVE ASSEMBLY FOR CONTINUOUS SUPPLY (OUTSIDE INSTALLATION) W-43

44. 3" TO 10" DOUBLE CHECK VALVE ASSEMBLY FOR DOMESTIC AND IRRIGATION SERVICES (OUTSIDE INSTALLATION) W-44

45. 3" TO 10" DOUBLE CHECK VALVE ASSEMBLY WITH DETECTOR FOR FIRE SPRINKLER SYSTEMS (OUTSIDE INSTALLATION) W-45

46. 3" TO 10" REDUCED PRESSURE PRINCIPLE BACKFLOW ASSEMBLY FOR DOMESTIC AND IRRIGATION SERVICES (OUTSIDE INSTALLATION) W-46

47. 3" TO 10" REDUCED PRESSURE PRINCIPLE BACKFLOW ASSEMBLY WITH DETECTOR FOR FIRE SPRINKLER SYSTEM (OUTSIDE INSTALLATION) W-47

48. TIMBER BAFFLE/HILL HOLDER W-48

THRUST BLOCK – TABLE							
		MINIUM BEARING AREA AGAINST UNDISTURBED SOIL SQUARE FEET					
PIPE SIZE	PRESSURE PSI	A	B	C	D	E	X (100 PSI)
4"	200 300	2/(1) 3/(2)	1/(NONE) 2/(2)	1/(NONE) 2/(1)	NONE 1/(1)	NONE NONE	NONE
6"	200 300	4/(3) 6/(4)	3/(2) 4/(3)	3/(1) 3/(2)	1/(1) 2/(1)	1/(NONE) 1/(NONE)	NONE
8"	200 300	7/(5) 11/(8)	5/(3) 8/(5)	4/(3) 6/(4)	2/(2) 3/(2)	1/(1) 2/(1)	3/(2)
10"	200 275	11/(8) 16/(11)	8/(6) 11/(7)	6/(4) 9/(6)	3/(2) 5/(3)	2/(1) 3/(2)	4/(3)
12"	200 250	16/(11) 24/(16)	11/(8) 17/(11)	9/(6) 13/(9)	5/(3) 7/(5)	3/(2) 4/(3)	5/(4)
14"	200 250	22/(13) 33/(22)	16/(11) 23/(16)	12/(8) 18/(12)	6/(4) 9/(6)	3/(2) 5/(3)	7/(6)
16"	200 225	29/(19) 32/(21)	21/(14) 23/(16)	16/(11) 17/(12)	8/(6) 9/(6)	5/(3) 5/(3)	10/(7)
18"	200	36/(24)	26/(17)	20/(13)	10/(7)	5/(4)	13/(9)
20"	200	45/(29)	32/(21)	24/(16)	13/(8)	7/(4)	16/(11)
24"	200	64/(43)	46/(30)	35/(23)	18/(12)	9/(6)	23/(16)

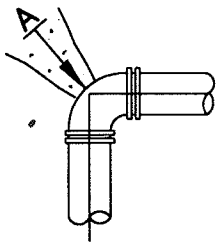

90° BEND

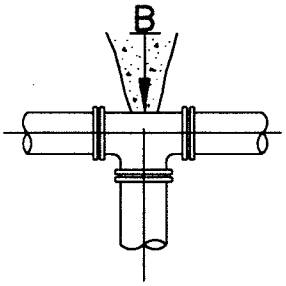

TEE

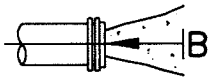

CAP

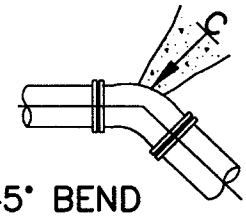

45° BEND

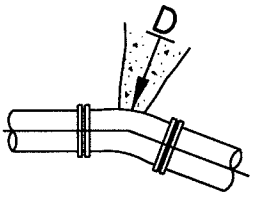

22 1/2° BEND

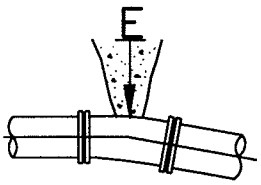

11 1/4° BEND

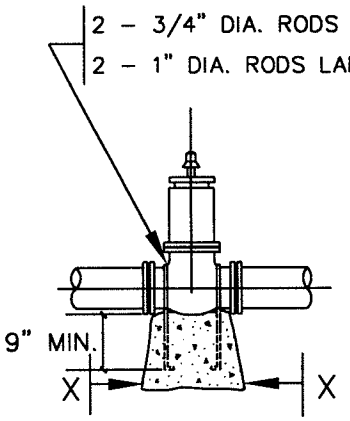

GATE VALVE

NOTE: ADDITIONAL BLOCKING MUST BE PROVIDED IF GATE VALVE IS AT END OF LINE DURING TESTING.

NOTES:

1. SQUARE FEET OF CONCRETE THRUSTS – BLOCK AREA BASED ON SAFE BEARING LOAD OF 2000/(3000) POUNDS PER SQUARE FOOT.
2. AREAS MUST BE ADJUSTED FOR OTHER SIZE PIPE, PRESSURES & SOIL CONDITIONS.
3. CONCRETE BLOCKING SHALL BE CAST IN PLACE & HAVE MINIMUM OF 1/4 SQUARE FOOT BEARING AGAINST THE FITTING.
4. BLOCK SHALL BEAR AGAINST FITTINGS ONLY & SHALL BE CLEAR OF JOINTS TO PERMIT TAKING UP OR DISMANTLING JOINT.
5. CONTRACTOR SHALL INSTALL BLOCKING ADEQUATE TO WITHSTAND FULL TEST PRESSURE AS WELL AS TO CONTINUOUSLY WITHSTAND OPERATING PRESSURE UNDER ALL CONDITIONS OF SERVICE.

SAFE BEARING LOADS IN LB./SQ. FT.
THE SAFE BEARING LOADS GIVEN IN THE FOLLOWING TABLE ARE FOR HORIZONTAL THRUSTS WHEN THE DEPTH OF COVER OVER THE PIPE EXCEEDS 2 FEET.

SOIL	SAFE BEARING LOAD LB. PER SQ. FT.
* MUCK, PEAT, ETC.	0
SOFT CLAY	1,000
SAND	2,000
SAND & GRAVEL	3,000
SAND & GRAVEL CEMENTED WITH CLAY	4,000
HARD SHALE	10,000

* IN MUCK OR PEAT, ALL THRUSTS SHALL BE RESTRAINED BY PILES OR TIE RODS TO SOLID FOUNDATIONS OR BY REMOVAL OF MUCK OR PEAT AND REPLACEMENT WITH BALLAST OF SUFFICIENT STABILITY TO RESIST THRUST.

JULY 14, 1998 NO SCALE

City of Bellevue

WATER UTILITIES

TITLE

CONCRETE BLOCKING

NO. W-1

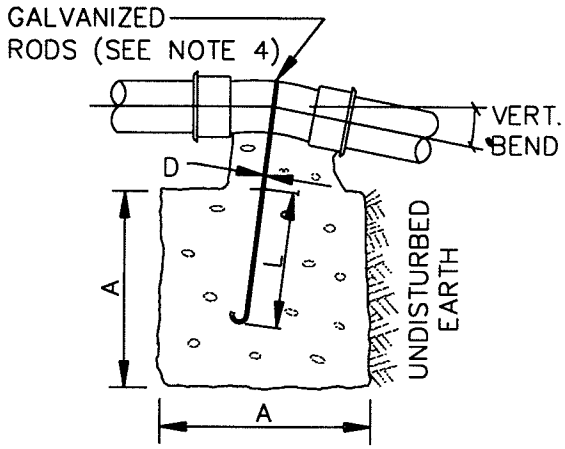

VERTICAL BLOCKING 11 1/4° & 22 1/2° BENDS

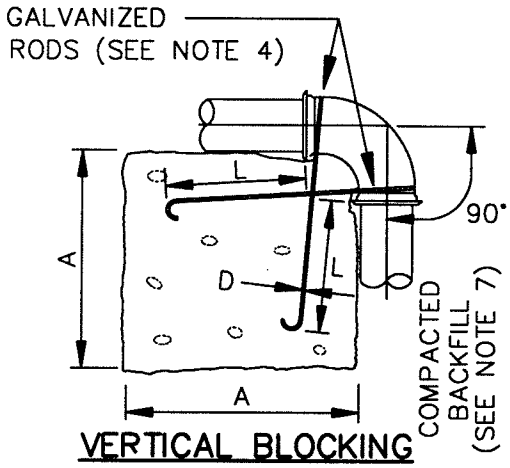

VERTICAL BLOCKING FOR 90° BENDS

(SEE NOTE 6)

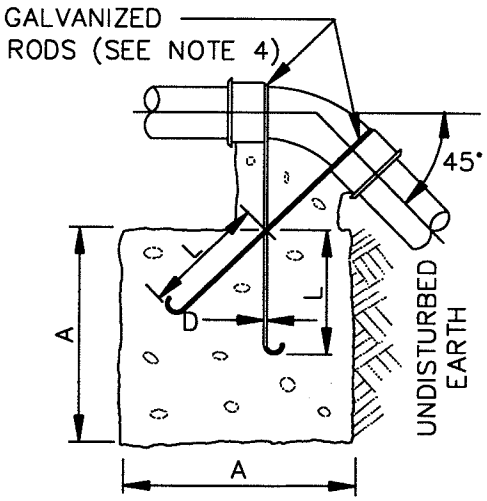

VERTICAL BLOCKING FOR 45° BENDS

VERTICAL BLOCKING SIZE W/RESTRAINED JOINTS SOIL TYPE = COHESIVE GRANULAR [GC+SC] SAND, GRAVEL, CLAY MIXTURE					
PIPE SIZE	V B	CU FT	A	D	L
4"	11 1/4°	*			
	22 1/2°	*			
	45°	*			
	90°	16	2.5'	3/4"	2.0'
6"	11 1/4°	*			
	22 1/2°	*			
	45°	13	2.3'	3/4"	2.0'
	90°	43	3.5'	3/4"	2.0'
8"	11 1/4°	*			
	22 1/2°	*			
	45°	33	3.2'	3/4"	2.0'
	90°	86	4.4'	3/4"	2.0'
10"	11 1/4°	*			
	22 1/2°	13	2.3'	3/4"	2.0'
	45°	64	4.0'	3/4"	2.0'
	90°	141	5.2'	1"	3.5'
12"	11 1/4°	*			
	22 1/2°	20	2.7'	3/4"	2.0'
	45°	111	4.8'	3/4"	2.0'
	90°	206	5.9'	1 1/8"	4.0'

* BLOCKING NOT REQUIRED IF 36 FEET OF PIPE IS RESTRAINED ON EACH SIDE OF BEND.

NOTES:

1. NO CHANGE IN PIPE DIRECTION OR DIAMETER SHALL OCCUR WITHIN 36 FEET OF THE VERTICAL BEND. BENDS, TEES, REDUCERS, ETC. BEYOND THE 36 FOOT LIMIT SHALL BE RESTRAINED BY STANDARD CONCRETE BLOCKING PER STD. DTL. W-1 & W-3.
2. CONCRETE BLOCKING SIZES BASED ON:
   - 36 FEET OF PIPE RESTRAINED EACH SIDE OF BEND.
   - THRUST BLOCK AREAS BASED ON SAFE BEARING LOAD OF 1,000 PSF.
   - 2,500 PSI CONCRETE.
   - MINIMUM 3 FEET OF COVER.
   - PIPE THRUST BASED ON 200 PSI PRESSURE.
   - PIPE ENCASED IN POLYETHYLENE.
   - VERTICAL BLOCK SIZE BASED ON CONCRETE WEIGHT OF 150 POUNDS PER CUBIC FOOT.
   - TRENCH CONDITIONS BASED ON TYPE 2, FLAT BOTTOM TRENCH WITH LIGHTLY CONSOLIDATED BACKFILL, PER ANSI/AWWA C150/A21.50.
   - FACTOR OF SAFETY IS 1.5.
   - SOIL FRICTIONAL RESISTANCE BASED ON COHESIVE GRANULAR SOIL TYPE (GC+SC). SAND, GRAVEL, CLAY MIXTURE.
3. BLOCKING DESIGN MUST BE ADJUSTED FOR OTHER SIZE PIPE, PRESSURES AND SOIL CONDITIONS.
4. DEFORMED REINFORCEMENT BARS SHALL BE IN ACCORDANCE WITH ASTM A 615. BARS SHALL BE GALVANIZED IN ACCORDANCE WITH ASTM A 767.
5. LINE SHALL NOT BE PRESSURIZED UNTIL ALL TRENCHING WITHIN 100 FEET OF VERTICAL BEND IS BACKFILLED AND COMPACTED TO MINIMUM COVER OF 3 FEET OVER PIPE.
6. 90° VERTICAL BENDS SHALL ONLY BE INSTALLED WHERE GIVEN PRIOR APPROVAL BY THE UTILITY.
7. BACKFILL TRENCH BEYOND 90° VERTICAL BLOCK WITH CRUSHED SURFACING TOP COURSE MATERIAL COMPACTED TO 95% MAXIMUM DENSITY. CRUSHED BACKFILL SHALL EXTEND 20 FEET BEYOND BLOCK OR TO FIRM BEARING TRENCH WALL, WHICHEVER IS LESS.

FEBRUARY 28, 1996 NO SCALE

City of Bellevue WATER UTILITIES

TITLE

VERTICAL BLOCKING WITH RESTRAINED JOINTS FOR NEW LINES

NO. W-2

VERTICAL BLOCKING FOR 11 1/4°–22 1/2°–30° BENDS					
PIPE SIZE	V B	CU FT	A	D	L
4"	11 1/4°	8	2.0'	3/4"	1.5'
	22 1/2°	11	2.2'		2.0'
	30°	17	2.6'		
6"	11 1/4°	11	2.2'	3/4"	2.0'
	22 1/2°	25	2.9'		
	30°	41	3.5'		
8"	11 1/4°	16	2.5'	3/4"	2.0'
	22 1/2°	47	3.6'		
	30°	70	4.1'	3/4"	2.5'
12"	11 1/4°	32	3.2'	3/4"	2.0'
	22 1/2°	88	4.5'	7/8"	3.0'
	30°	132	5.1'		
16"	11 1/4°	70	4.1'	7/8"	3.0'
	22 1/2°	184	5.7'	1 1/8"	4.0'
	30°	275	6.5'	1 1/4"	
20"	11 1/4°	91	4.5'	7/8"	3.0'
	22 1/2°	225	6.1'	1 1/4"	4.0'
	30°	330	6.9'	1 3/8"	4.5'
24"	11 1/4°	128	5.0'	1"	3.5'
	22 1/2°	320	6.8'	1 3/8"	4.5'
	30°	480	7.9'	1 5/8"	5.5'
VERTICAL BLOCKING FOR 45° BENDS					
4"	45°	30	3.1'	3/4"	2.0'
6"		68	4.1'		
8"		123	5.0'		
12"		232	6.1'	3/4"	2.5'
16"		478	7.8'	1 1/8"	4.0'
20"		560	8.2'	1 1/4"	
24"		820	9.4'	1 3/8"	4.5'

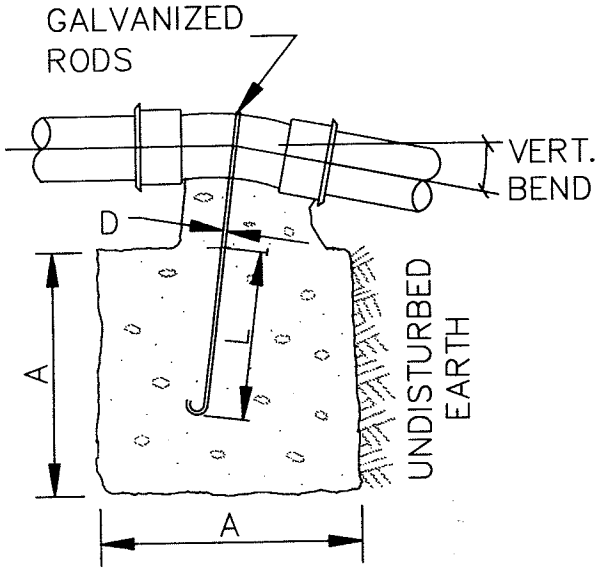

VERTICAL BLOCKING
FOR 11 1/4°, 22 1/2°, & 30° BENDS

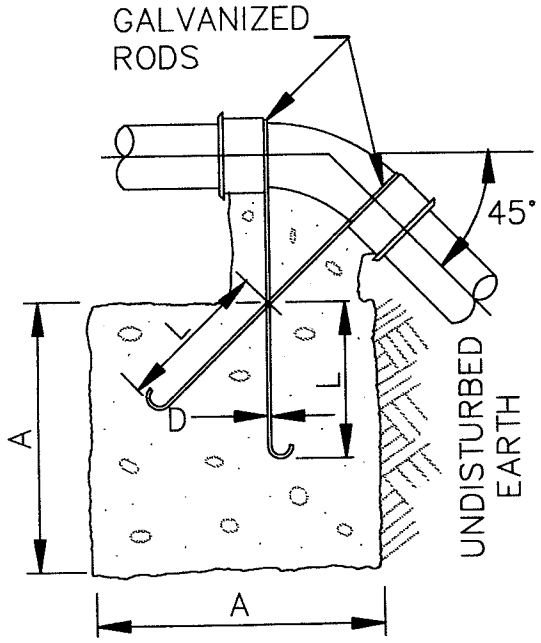

VERTICAL BLOCKING
FOR 45° BENDS

NOTES:

1. CONCRETE BLOCKING BASED ON 200 PSI PRESSURE AND 2500 PSI CONCRETE.

City of Bellevue

WATER UTILITIES

TITLE

VERTICAL BLOCKING
FOR CONNECTING TO
EXISTING MAIN

NO. W-3

DECEMBER 13, 1995

NO SCALE

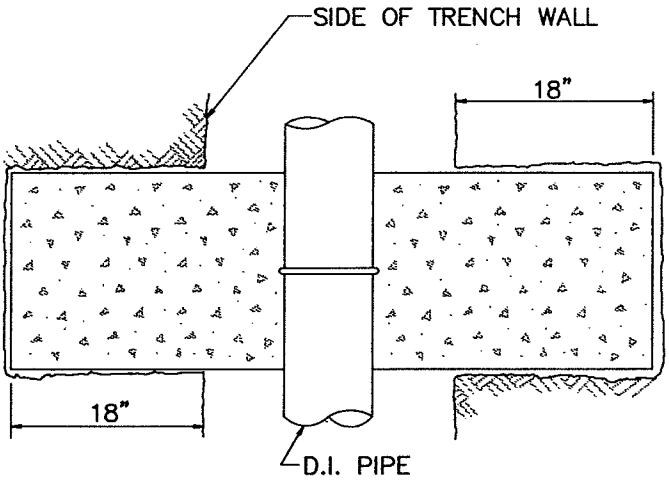

PIPE SIZE	DIMENSIONS (INCHES)				
	A	B	C	D	E
4"	2.4	4.8	17	13	14.6
6"	3.5	6.9	18	14	14.5
8"	4.5	9.1	19	15	14.5
10"	5.6	11.1	20	16	14.4
12"	6.6	13.2	21	17	14.4
14"	7.7	15.3	22	18	14.3
16"	8.7	17.4	23	19	14.3
18"	9.8	19.5	24	20	14.2

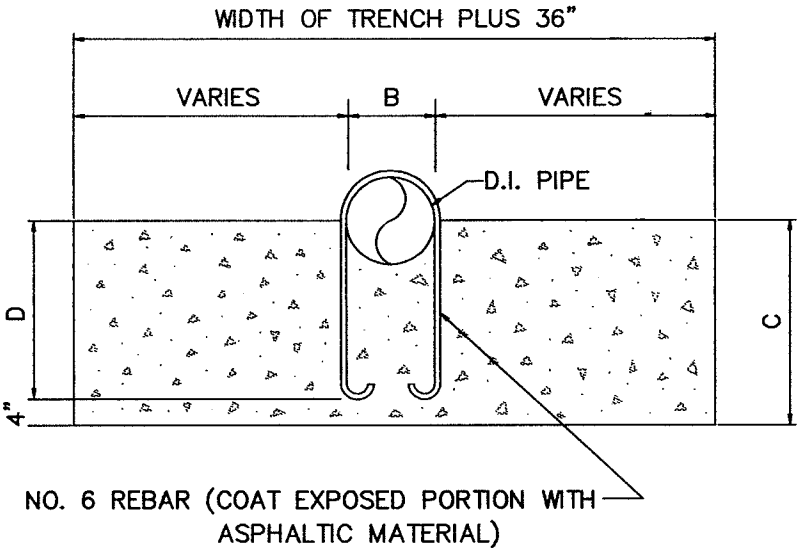

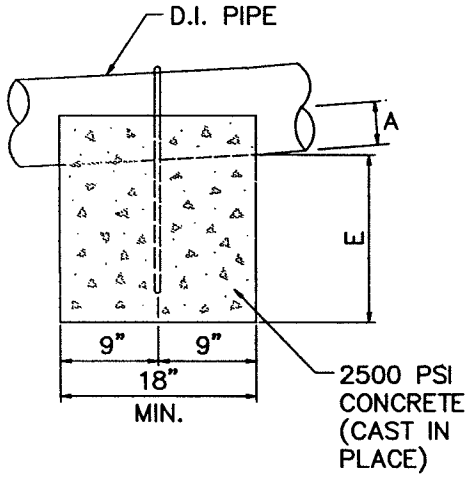

SLOPES > 20% – PROVIDE CONCRETE SLOPE ANCHORS (20' TO 25' ON CNTR.)

City of Bellevue

WATER UTILITIES

TITLE

CONCRETE SLOPE ANCHOR DETAIL

DECEMBER 13, 1995

NO SCALE

NO. W-4

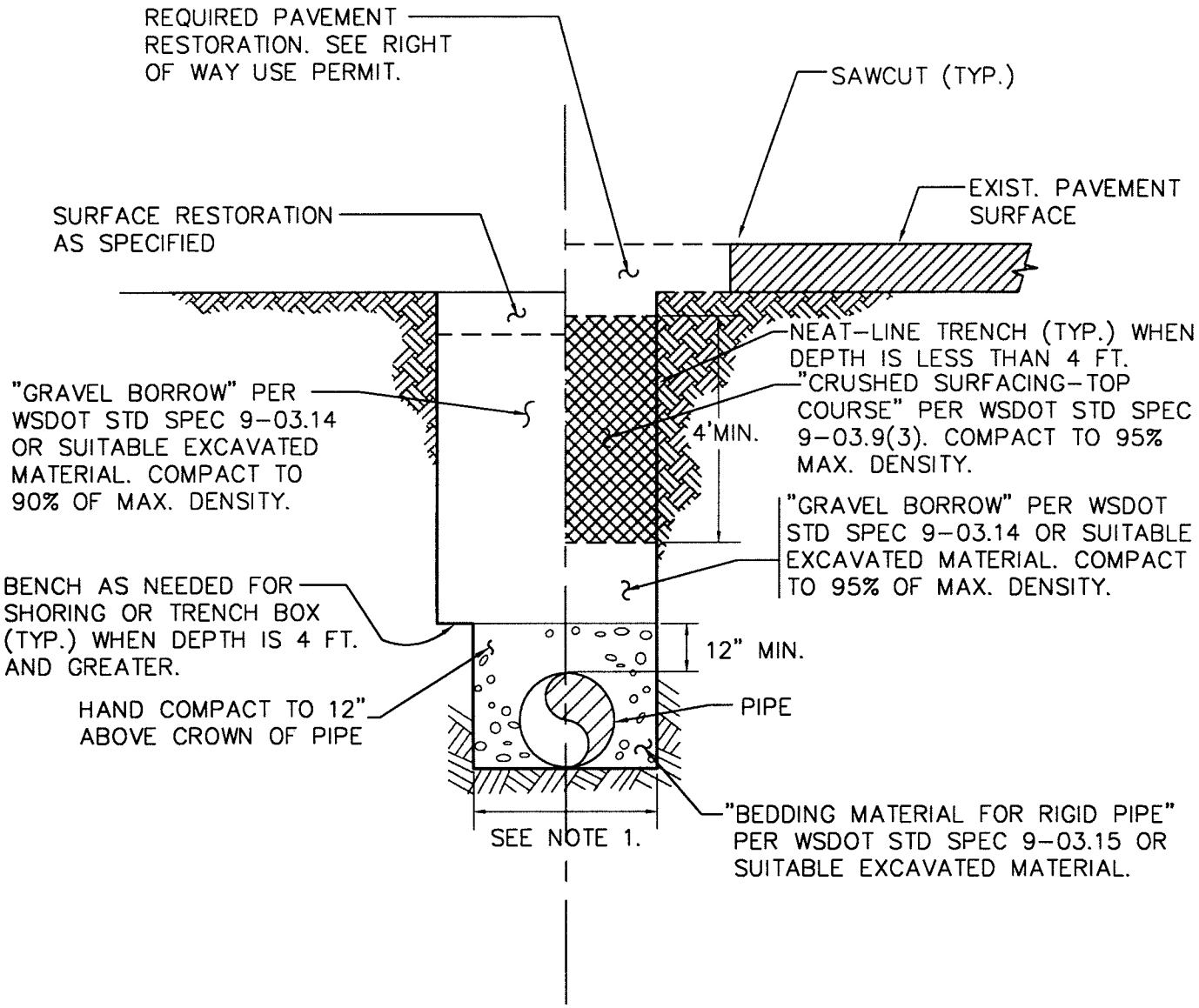

NOTES:

1. MAXIMUM WIDTH OF TRENCH AT TOP OF PIPE
   * 30" FOR PIPE UP TO AND INCLUDING 12" NOMINAL DIAMETER.
   * O.D. PLUS 16" FOR PIPE LARGER THAN 12" NOMINAL DIAMETER.

City of Bellevue

WATER UTILITIES

TITLE

TYPICAL TRENCH DETAIL

JULY, 1998

NO SCALE

NO. W-5

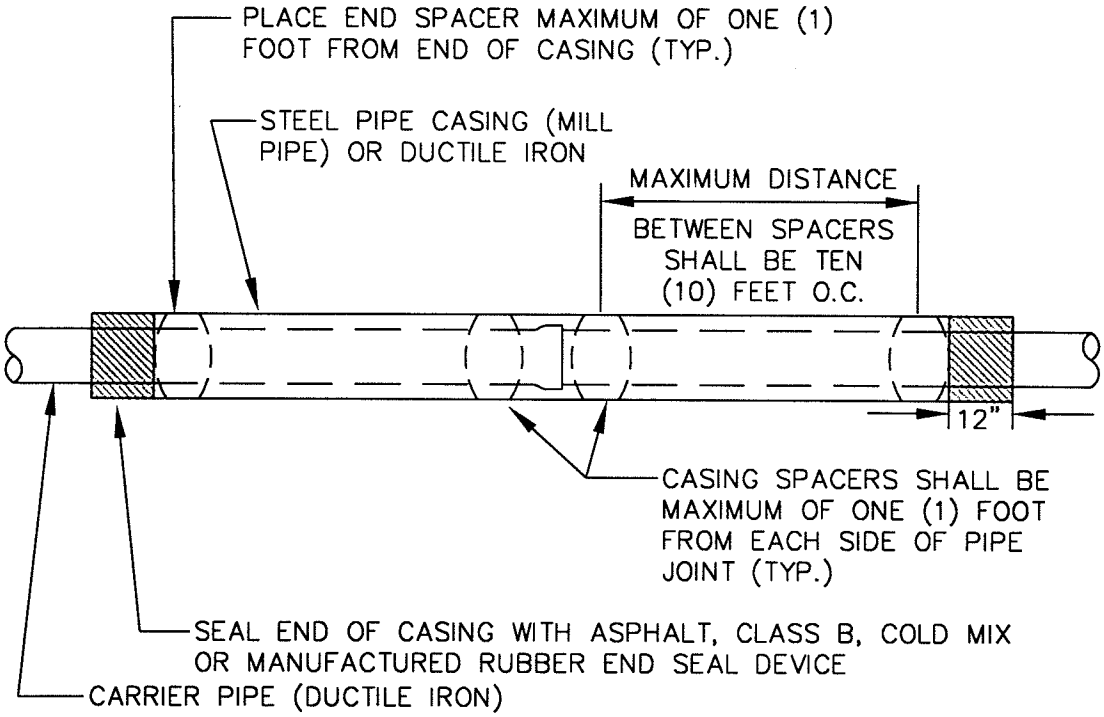

CASING SPACERS (SEE APPROVED MATERIALS LIST)

CARRIER PIPE DIAMETER	4"	6"	8"	10"	12"
CASING DIAMETER (PUSH-ON JOINT CARRIER PIPE)	10"	12"	14"	16"	20"
CASING DIAMETER (MJ/MEGALUG JOINT CARRIER PIPE)	14"	16"	18"	20"	22"*
STEEL CASING THICKNESS	0.25"	0.25"	0.25"	0.25"	0.25"
SPACER BAND WIDTH	8"	8"	8"	8"	8"

* 24" FOR DUCTILE IRON CASING.

ANTICORROSIVE COATING THICKNESS:
CARRIER – 8 MILLS DFT
CASING – 8 MILLS DFT

NOTES:

1. CASING SPACERS SHALL BE "CENTER POSITIONING" TYPE.
2. MINIMUM RUNNER WIDTH SHALL BE 2 INCHES.
3. RUNNER HEIGHT SHALL BE SIZED TO PROVIDE:
   A. MINIMUM 0.75" BETWEEN CARRIER PIPE BELL AND CASING PIPE WALL AT ALL TIMES.
   B. MINIMUM 1" CLEARANCE BETWEEN RUNNERS AND TOP OF CASING WALL TO PREVENT JAMMING DURING INSTALLATION.
4. STEEL CASING DIAMETERS ARE "OUTSIDE DIAMETER" FOR 16" AND LARGER.
5. SPACER BAND WIDTH SHALL BE 12" FOR CARRIER PIPES THAT ARE 36" DIAMETER OR GREATER

City of Bellevue

WATER UTILITIES

TITLE

CASING INSTALLATION

JULY, 1998

NO SCALE

NO. W-6

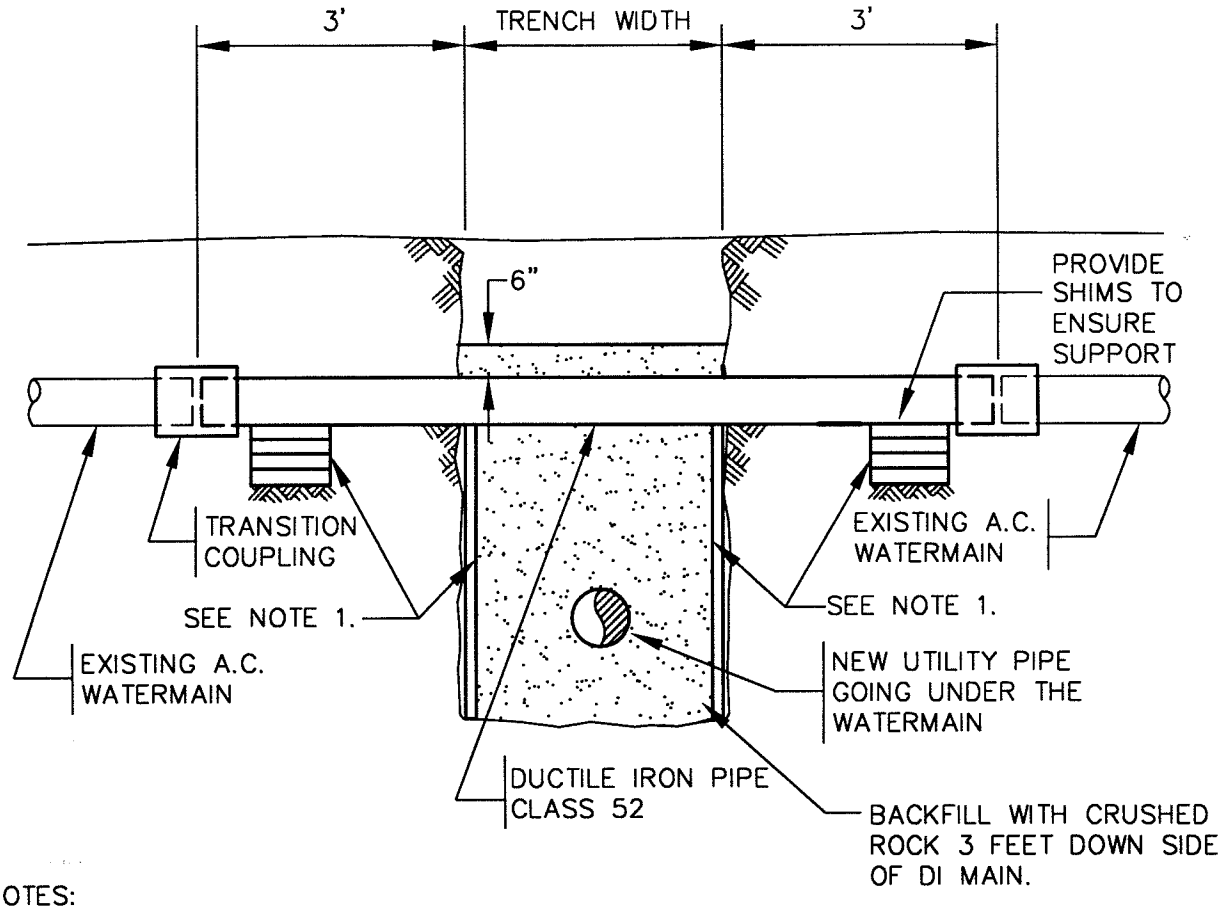

NOTES:

1. D.I. PIPE SHALL REST ON FIRM BEARING EARTH: SHORE TRENCH WALL UNDER WATERMAIN AS SHOWN, OR SUPPORT PIPE WITH PATIO BLOCKS (8"x16"X 2"). STACK BLOCKS AS REQUIRED TO REST ON FIRM BEARING SOIL.
2. WRAP DUCTILE IRON PIPE AND TRANSITION COUPLINGS WITH 8 MIL POLYETHYLENE CONFORMING TO AWWA C-105.
3. THE CONTRACTOR IS REQUIRED TO MAINTAIN WORKERS' EXPOSURE TO ASBESTOS MATERIAL AT OR BELOW THE LIMIT PRESCRIBED IN WAC 296-62-07705.
4. ASBESTOS CEMENT PIPE SHALL BE CUT WITH A HAND-OPERATED CARBIDE BLADE CUTTER WITH CONTROLLED FLOWING WATER. A REED WHEEL CUTTER IS AVAILABLE FROM THE CITY OF BELLEVUE UPON 24 HOUR NOTICE.
5. CONTAMINATED CLOTHING SHALL BE LEFT AND BURIED IN TRENCH, OR TRANSPORTED IN SEALED IMPERMEABLE BAGS & LABELED IN ACCORDANCE WITH WAC 296-62-07721. ASBESTOS CEMENT PIPE SHALL BE LEFT AND BURIED IN TRENCH.

City of Bellevue

WATER UTILITIES

TITLE

TYPICAL A.C. WATERMAIN CROSSING REPLACEMENT DETAIL

NO. W-7

JULY, 1998

NO SCALE

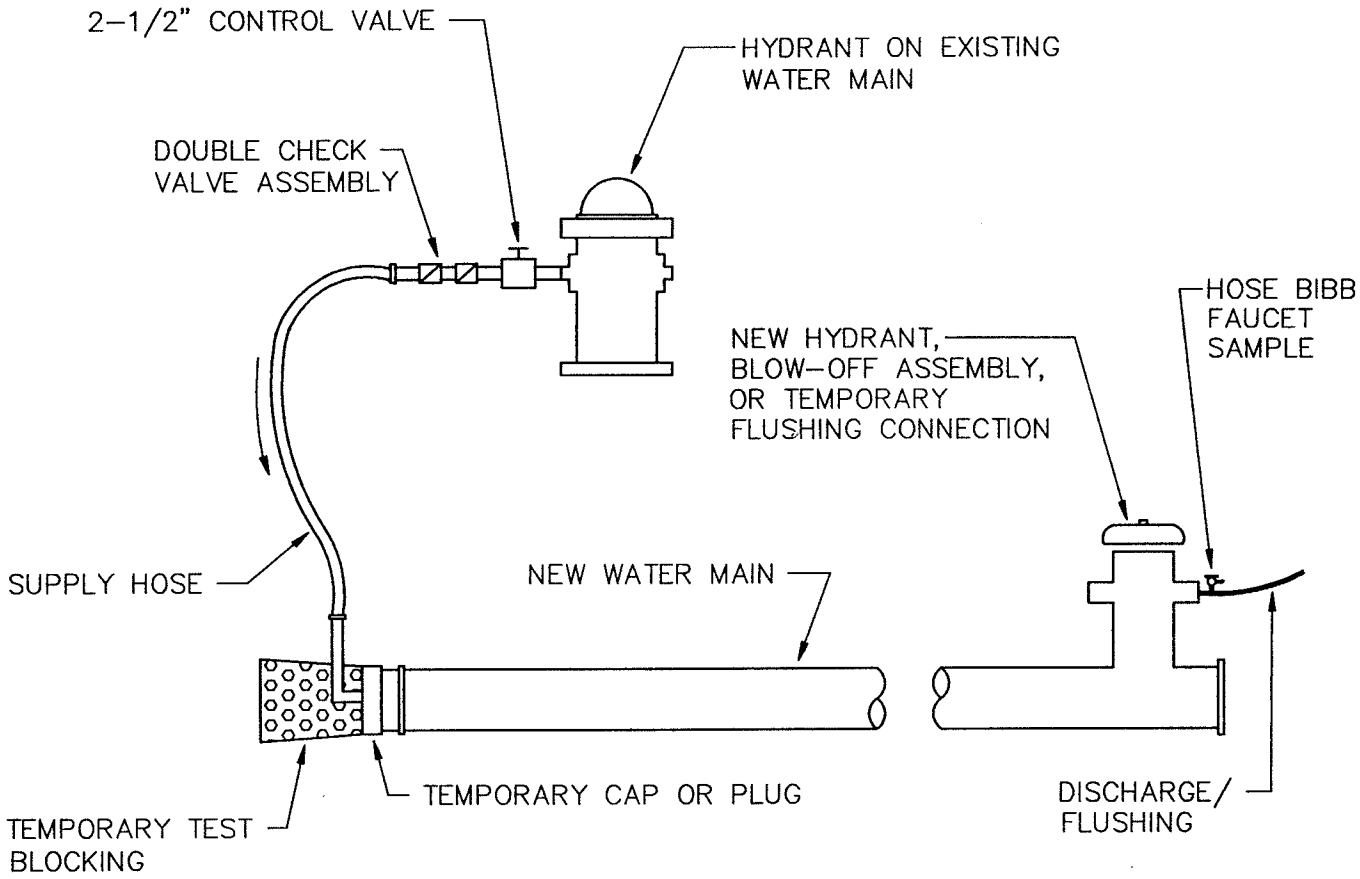

NOTES:

1. AN APPROVED BACKFLOW PREVENTION ASSEMBLY SHALL BE INSTALLED BETWEEN THE EXISTING AND NEW WATER LINES DURING DISINFECTION AND FLUSHING OF NEW WATERMAIN.

2. THE BACKFLOW PREVENTION ASSEMBLY AND SUPPLY HOSE MUST BE DISCONNECTED DURING HYDROSTATIC PRESSURE TESTING OF THE NEW MAIN.

3. THE NEW WATERMAIN SHALL BE CONNECTED TO THE EXISTING SYSTEM ONLY AFTER NEW MAIN IS FLUSHED, DISINFECTED AND SATISFACTORY BACTERIOLOGICAL SAMPLE RESULTS ARE OBTAINED.

4. THE INTERIORS OF ALL PIPES AND FITTINGS TO BE USED IN FINAL CONNECTION MUST BE SWABBED OR SPRAYED WITH A 1% AVAILABLE CHLORINE SOLUTION.

City of Bellevue

WATER UTILITIES

TITLE

FILLING NEW WATER MAINS

DECEMBER 14, 1995

NO SCALE

NO. W-8

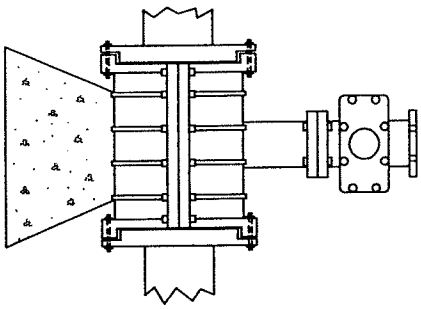

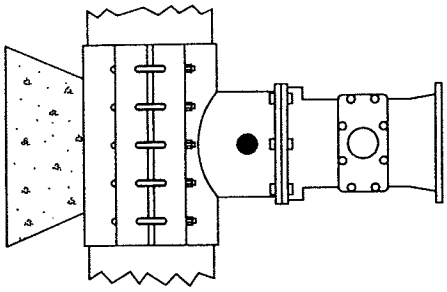

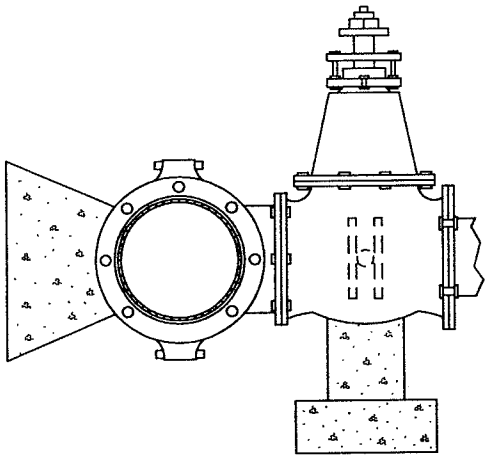

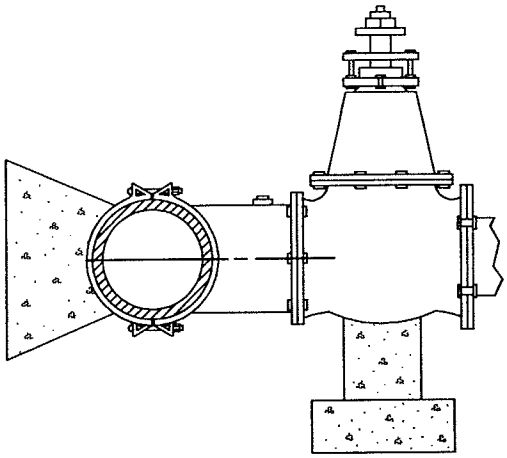

CAST IRON TAPPING TEE MECHANICAL JOINT SLEEVE

INSTALLED ON ASBESTOS CEMENT PIPE, CAST IRON PIPE AND DUCTILE IRON PIPE.

STAINLESS STEEL OR STEEL TAPPING TEE

STAINLESS STEEL TAPPING TEE

INSTALLED ON ASBESTOS CEMENT PIPE, CAST IRON PIPE AND DUCTILE IRON PIPE.

STEEL TAPPING TEE

INSTALLED ON DUCTILE IRON PIPE ONLY.

NOTES:

1. STAINLESS STEEL TAPPING TEES SHALL HAVE FULL CIRCLE SEAL. BOLTS AND NUTS SHALL BE STAINLESS STEEL.
2. STEEL TAPPING TEES SHALL BE EPOXY COATED. BOLTS AND NUTS SHALL BE COR-TEN, OR STAINLESS STEEL.
3. ALL TEES AND VALVES TO BE WATER TESTED BEFORE TAP.
4. NO SIZE ON SIZE TAPS. TAP SHALL BE AT LEAST 2" SMALLER DIAMETER THAN THE EXISTING MAIN.

City of Bellevue

WATER UTILITIES

TITLE

TAPPING TEES

NO. W-9

DECEMBER 14, 1995

NO SCALE

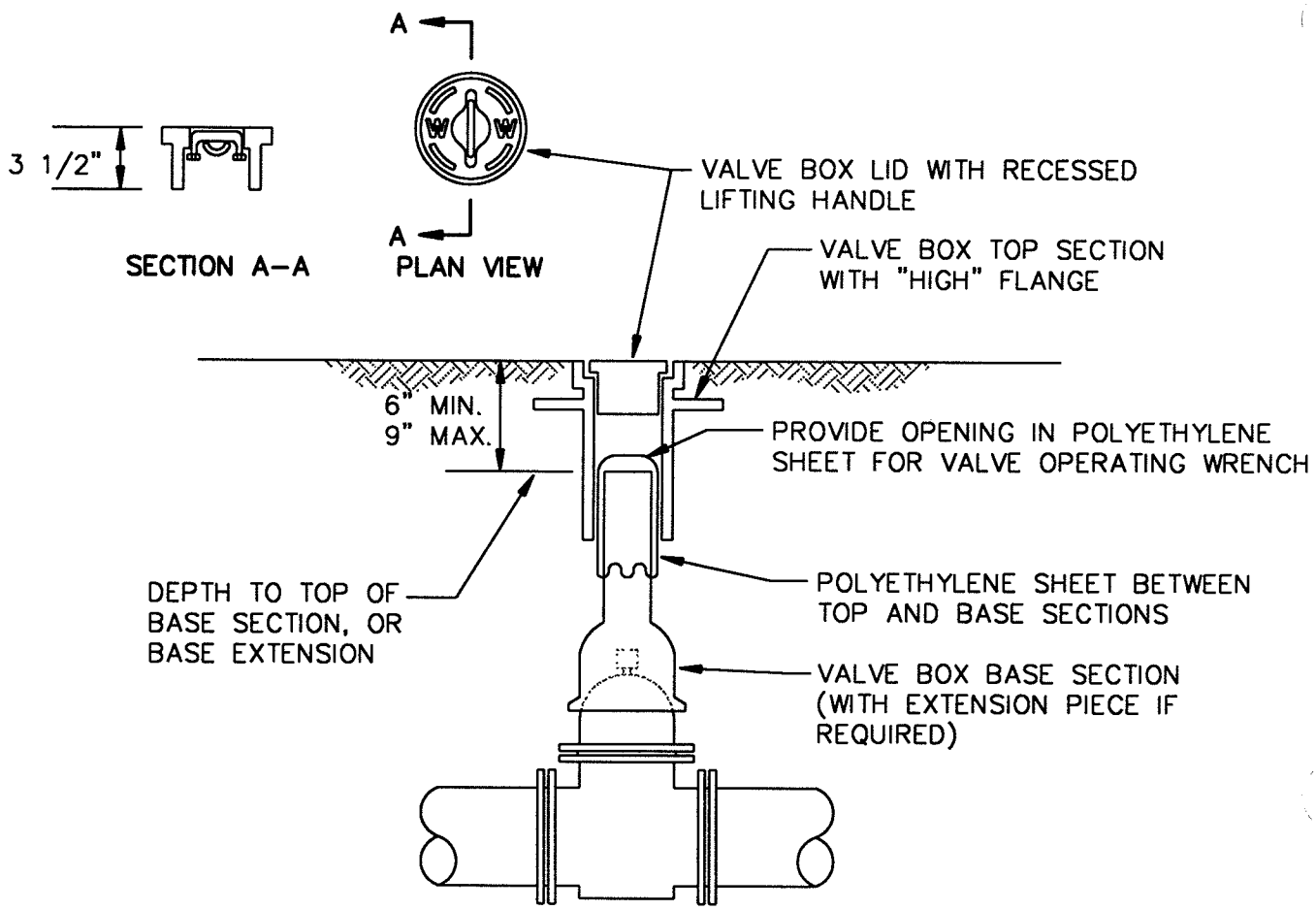

ALL PARTS SHALL BE CAST OR DUCTILE IRON AND COATED WITH ASPHALTIC VARNISH.

OLYMPIC FOUNDRY INC:
#VB045 LID, TOP AND BASE SECTION

RICH (VANRICH CASTING CORP.):
TOP SECTION AND LID #045
WITH RICH STANDARD BASE

INLAND FOUNDRY CO., INC.:
VALVE BOX PAVING RISER #2052–3, #2052–4, #2052–5 (PAVING RISER SHALL BE EPOXIED TO EXISTING VALVE BOX TOP SECTION)

12" ADJUSTING SLEEVE #044A

City of Bellevue

WATER UTILITIES

TITLE

VALVE BOX INSTALLATION

FEBRUARY 28, 1996

NO SCALE

NO. W–10

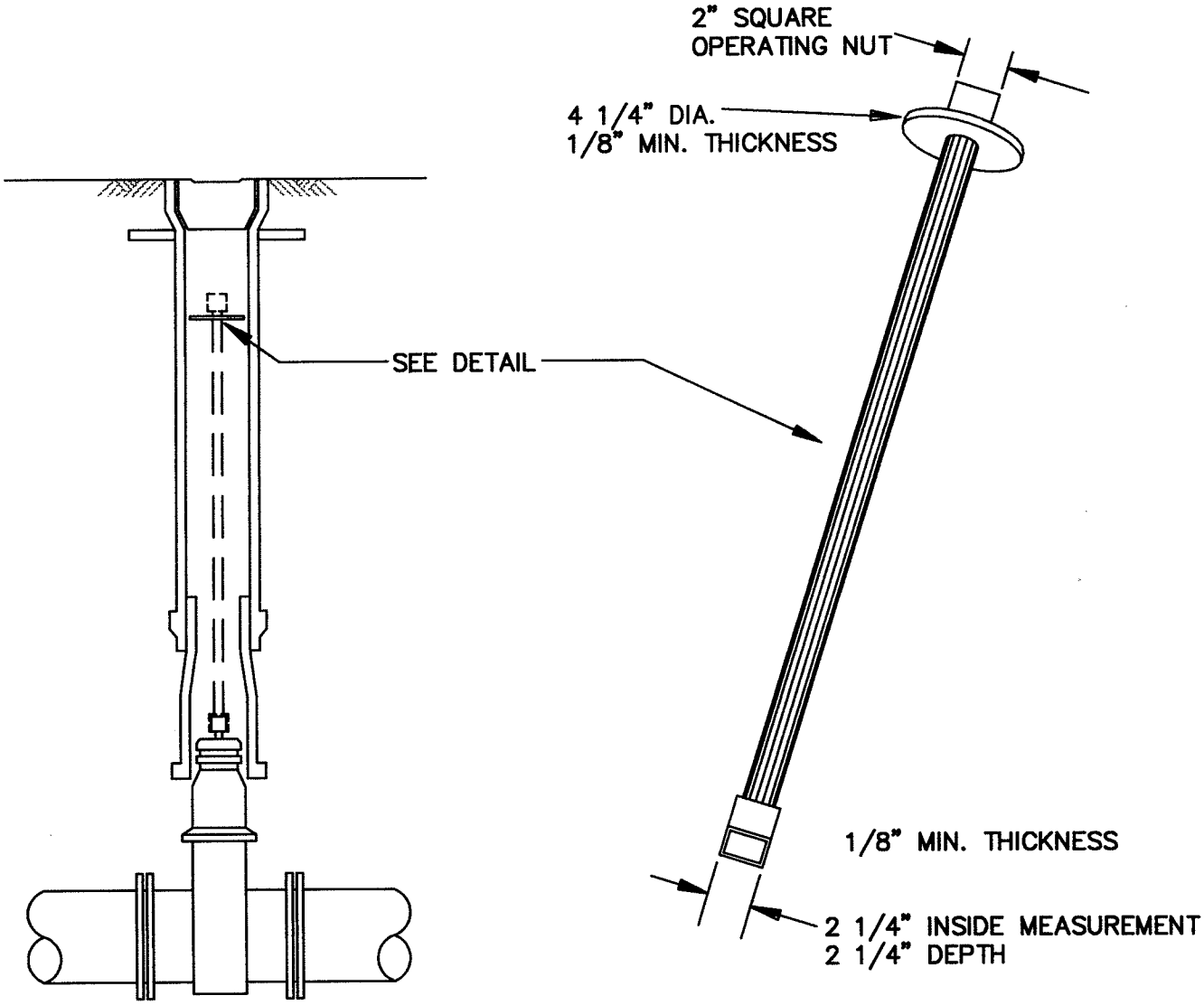

VALVE OPERATING NUT EXTENSION

EXTENSIONS ARE REQUIRED WHEN THE VALVE NUT IS MORE THAN THREE (3) FEET BELOW FINISHED GRADE. EXTENSIONS ARE TO BE A MINIMUM OF ONE (1) FOOT LONG. ONLY ONE EXTENSION TO BE USED PER VALVE.

NOTES:

1. ALL EXTENSIONS ARE TO BE MADE OF STEEL, SIZED AS NOTED, AND PAINTED WITH TWO COATS OF METAL PAINT.

City of Bellevue

WATER UTILITIES

TITLE

VALVE OPERATING EXTENSION

DECEMBER 14, 1995

NO SCALE

NO. W-11

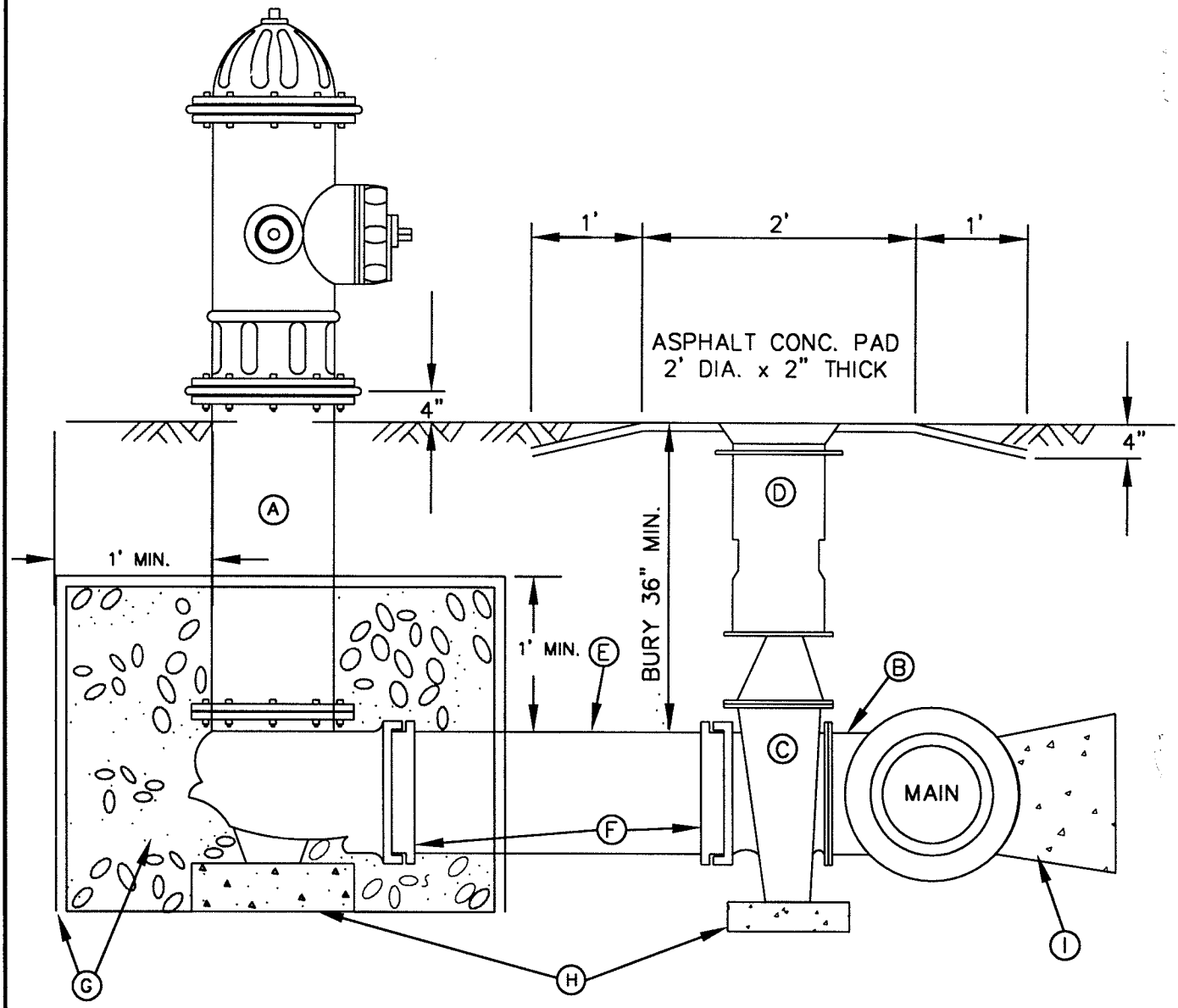

A. 1-5 1/4" M.V.O. HYDRANT WITH 2-2 1/2" N.S.T. AND 1-4" PUMPER PORTS, SEATTLE STANDARD THREAD-M.J. INLET, WITH LUGS, BRASS TO BRASS SUB-SEAT. FIRE HYDRANT TO BE PAINTED WITH TWO COATS OF RUSTOLEUM HIGH GLOSS WHITE PAINT. PUMPER PORT TO FACE STREET, OR AS DIRECTED BY THE FIRE DEPARTMENT.

B. 6" FLANGE OUTLET ON CAST OR DUCTILE IRON TEE.

C. 1-AUXILIARY GATE VALVE: 6" AWWA C509, RESILIENT SEAT, M.J.xFL. WITH LUGS.

D. 1-TWO-PIECE CAST IRON VALVE BOX EQUAL TO RICH SEATTLE TYPE #045 WITH RECESSED HANDLE LID.

E. 1-6" DUCTILE IRON CLASS 52 CEMENT-LINED PIPE, LENGTH TO FIT. WHERE MORE THAN ONE LENGTH OF PIPE IS REQUIRED, CONNECT PIPES WITH MECHANICAL JOINT SLEEVE, RESTRAIN PIPE AND SLEEVE WITH MEGALUG RESTRAINERS, OR RESTRAIN PIPES WITH UNI-FLANGE SERIES 1300 & 1390 JOINT RESTRAINERS.

F. RESTRAIN MECHANICAL JOINTS WITH MEGALUG RESTRAINERS.

G. 1/2 YARD WASHED DRAIN ROCK (3" TO 3/8"), MIN. 1' ABOVE BOOT FLANGE PLACE 8 MIL POLYETHYLENE FILM AROUND TOP AND SIDES OF GRAVEL DO NOT BLOCK DRAIN HOLES.

H. 16"X8"X4" MIN. SIZE CONCRETE BLOCK UNDER HYDRANT AND VALVE.

I. CONC. BLOCKING PER STD DETAIL NO. W-1.

City of Bellevue

WATER UTILITIES

TITLE

FIRE HYDRANT ASSEMBLY

JULY, 1998

NO SCALE

NO. W-12

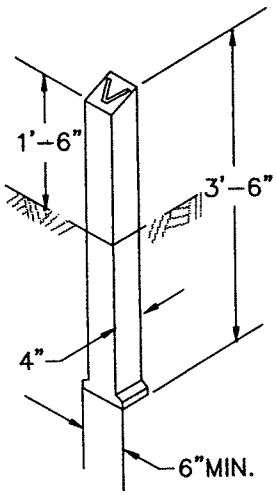

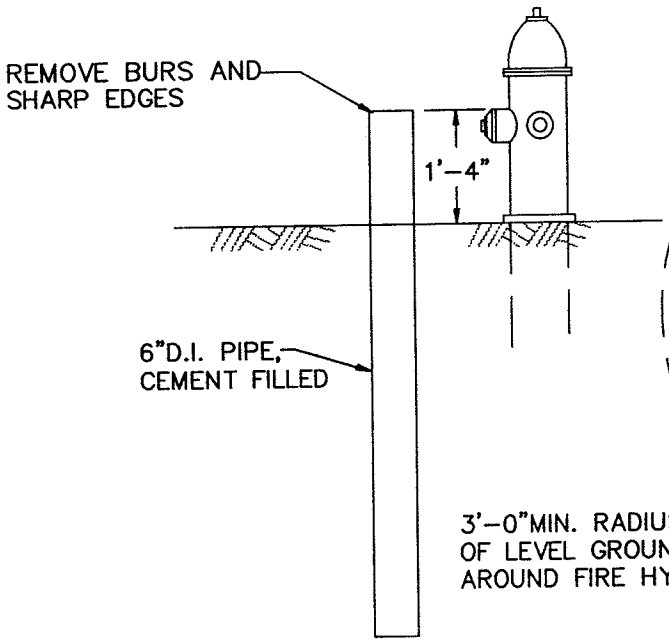

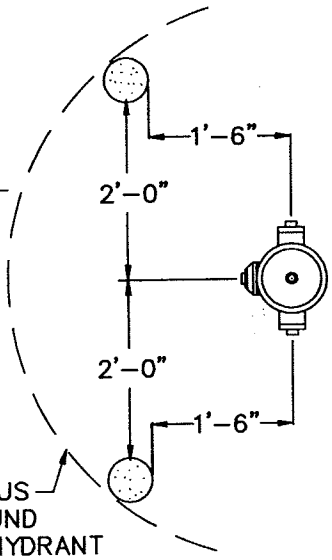

ELEVATION

PLAN

VALVE MARKER POST

FIRE HYDRANT GUARD POST

NOTES:

1. GUARD POST SHALL BE 6" CL.52 D.I. PIPE, 6' LONG, FILLED WITH CEMENT. PAINT WITH TWO COATS OF RUST-OLEUM HIGH GLOSS WHITE PAINT.
2. VALVE MARKER POST SHALL BE EQUAL TO FOG TITE METER SEAL COMPANY. PAINT WITH TWO COATS OF RUST-OLEUM HIGH GLOSS WHITE PAINT. PAINT DISTANCE FROM THE VALVE MARKER TO THE VALVE ON THE POST WITH BLACK ENAMEL PAINT.
3. VALVE MARKER POST TO BE USED FOR ALL MAINLINE VALVES OUTSIDE PAVED AREAS.

City of Bellevue

WATER UTILITIES

TITLE

FIRE HYDRANT GUARD POST
& VALVE MARKER POST

NO. W-13

DECEMBER 14, 1995

NO SCALE

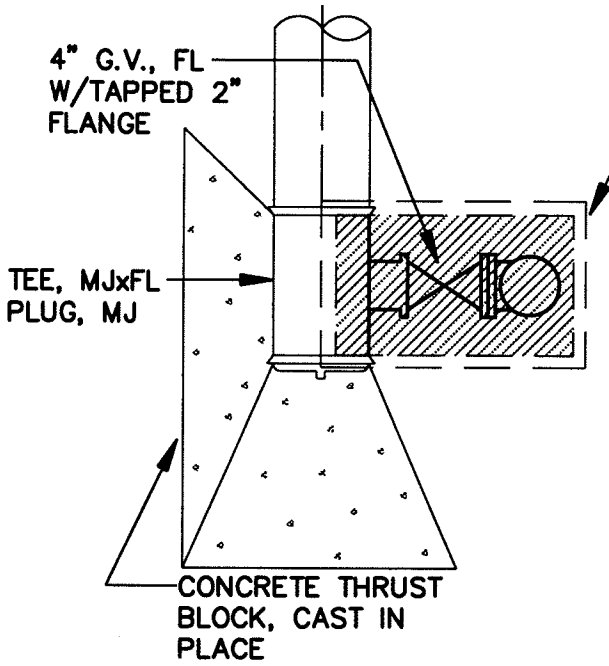

(PLAN)
TOP VIEW

METER BOX

IN PAVED AREAS

CUL-DE-SAC (DEAD-END):	FOG-TITE J-20S
THRU-STREET SHOULDER:	FOG-TITE J-20S W/LOCKING LID
TRAVELED STREET LANE:	20 1/4" DIAMTER CAST IRON MANHOLE COVER FOR 18" OPENING FRAME (EQUAL TO OLYMPIC FOUNDRY MH12SP COVER WITH MH12A FRAME) TO READ "WATER", WITH RAISED NON-SKID PATTERN RATED FOR H-20 LOAD. FRAME SHALL BE 4" DEEP, SET WITH FLANGE-SIDE DOWN IN 12" DEEP BY 9" WIDE PERIMETER OF 3000 PSI CEMENT CONCRETE.

OUTSIDE PAVED AREAS
(NOT SUBJECT TO TRAFFIC LOAD)

FOG-TITE B-10T

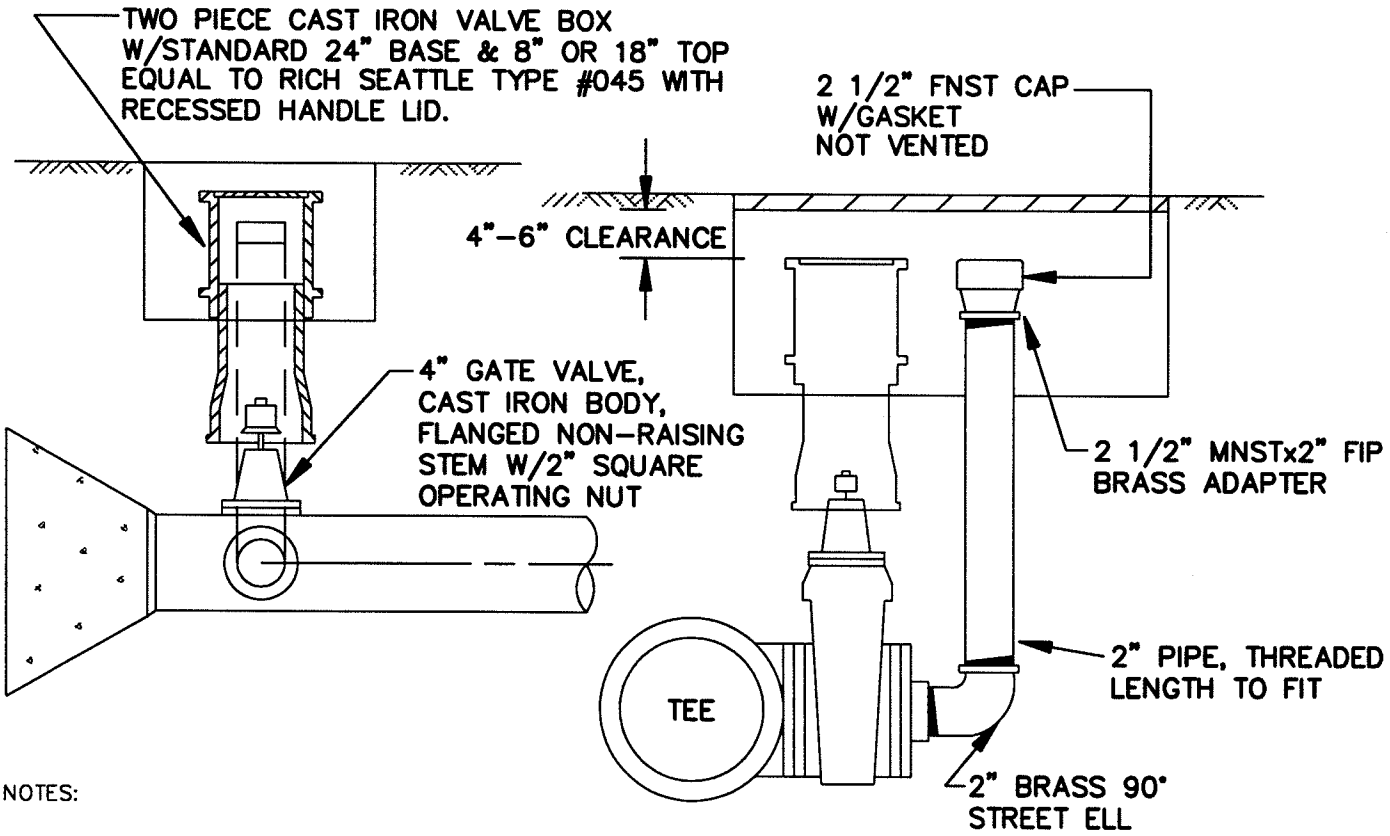

SIDE VIEW
(PROFILE)

NOTES:

1. ALL PIPE SHALL BE BRASS BEYOND GATE VALVE.
2. ALL ASSEMBLIES SHALL BE LOCATED IN STREET UNLESS OTHERWISE NOTED.
3. WHEN INSTALLED OUTSIDE PAVED AREAS, INSTALL VALVE MARKER POST PER STANDARD DETAIL NO. W-13 AND FIELD LOCATE ADJACENT TO METER BOX PAINTED WITH TWO COATS OF RUSTOLEUM HIGH GLOSS WHITE PAINT.

FEBRUARY 28, 1996 NO SCALE

City of Bellevue WATER UTILITIES

TITLE

2" BLOW-OFF ASSEMBLY

NO. W-14

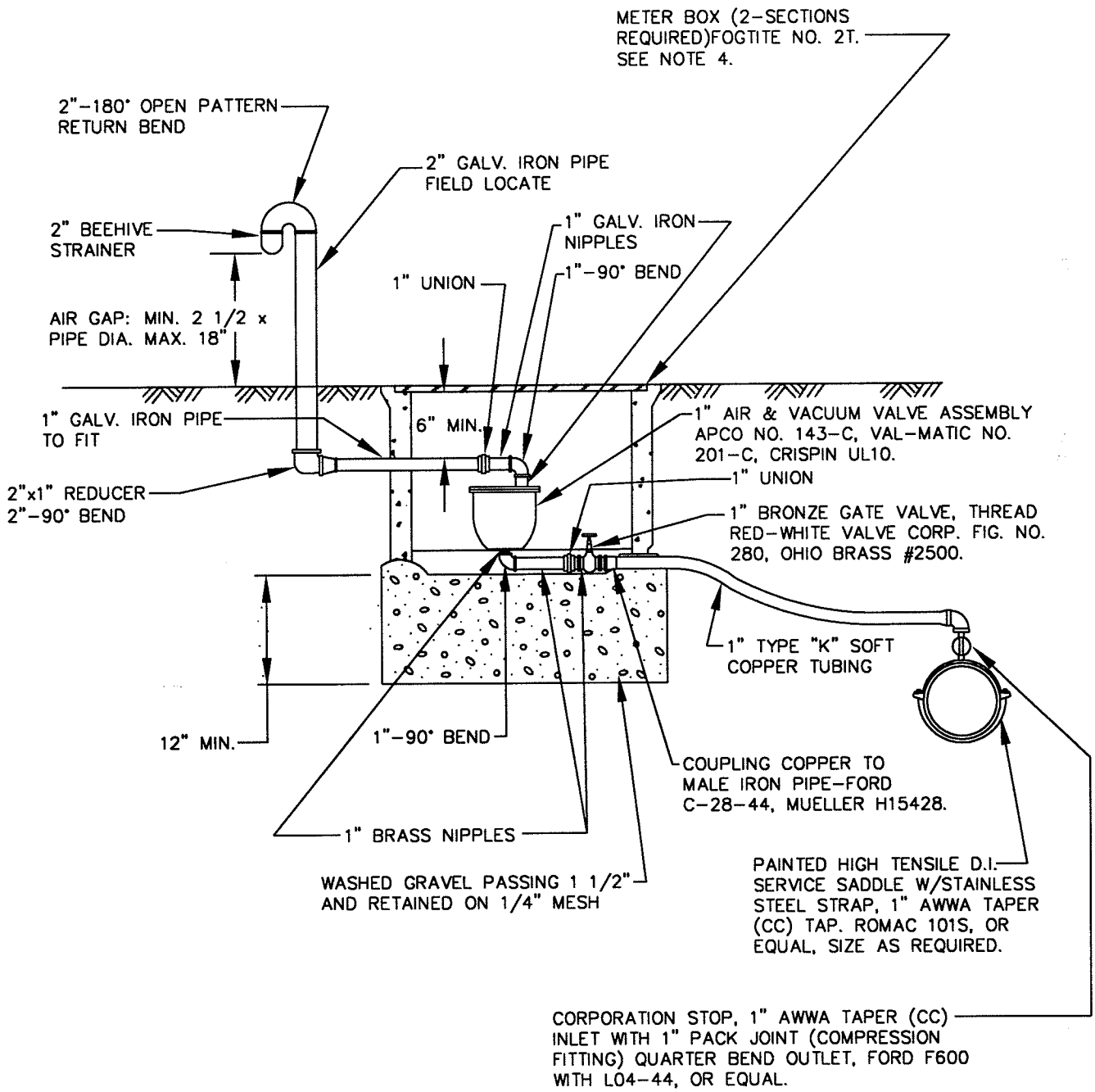

NOTES:

1. ALL FITTINGS TO BE BRASS OR COPPER FROM WATER MAIN TO 1" AIR & VACUUM ASSEMBLY.
2. 2" GALVANIZED PIPE ABOVE GRADE TO BE PAINTED WITH 2 COATS RUSTOLEUM HIGH GLOSS WHITE PAINT.
3. AIR & VACUUM RELEASE VALVE ASSEMBLY MUST BE INSTALLED AT HIGHEST POINT OF LINE. IF HIGH POINT FALLS IN A LOCATION WHERE ASSEMBLY CANNOT BE INSTALLED, PROVIDE ADDITIONAL DEPTH OF LINE TO CREATE HIGH POINT AT A LOCATION WHERE ASSEMBLY CAN BE INSTALLED.
4. LOCATE AIR & VACUUM METER BOX OUTSIDE OF TRAFFIC AREAS, BEHIND CURB OR SIDEWALK.

City of Bellevue

WATER UTILITIES

TITLE

1" AIR & VACUUM RELEASE VALVE ASSEMBLY

JULY, 1998

NO SCALE

NO. W-15

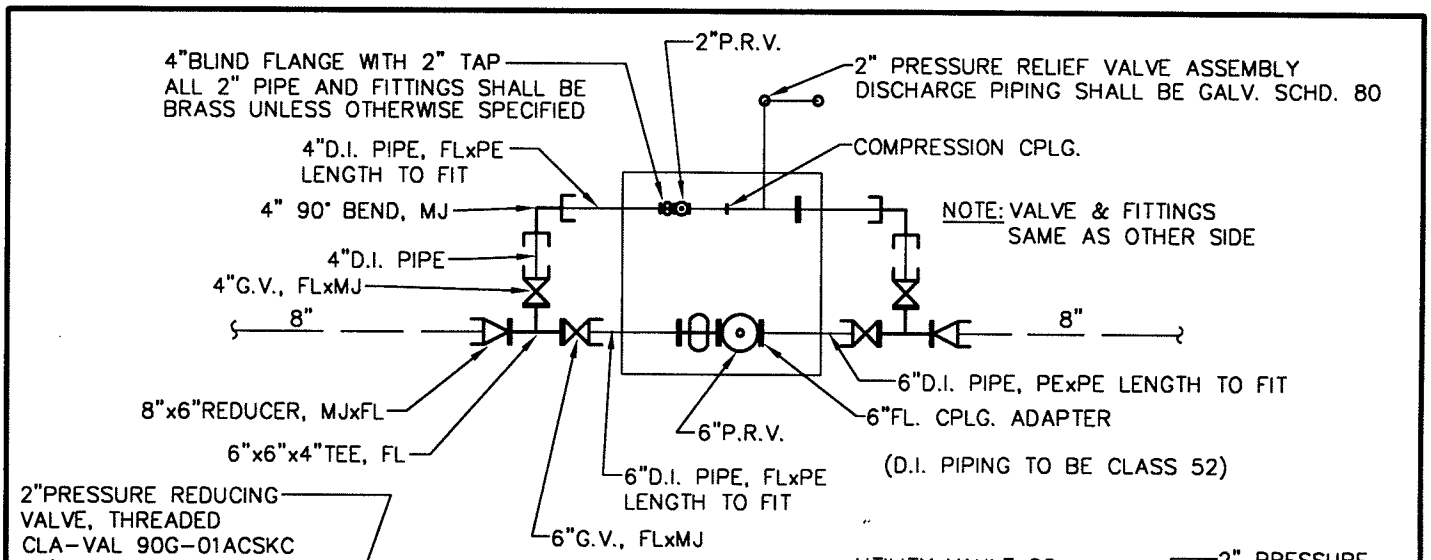

TYPICAL P.R.V.

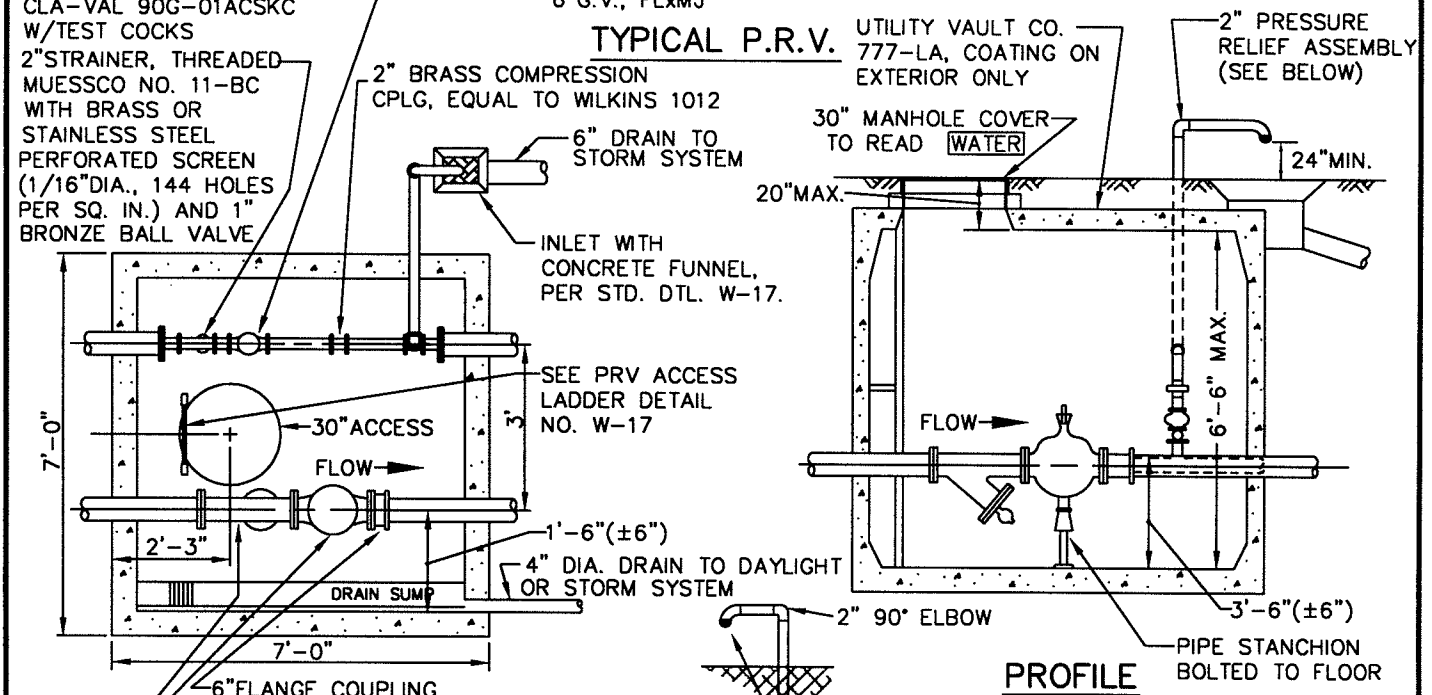

PLAN

PROFILE

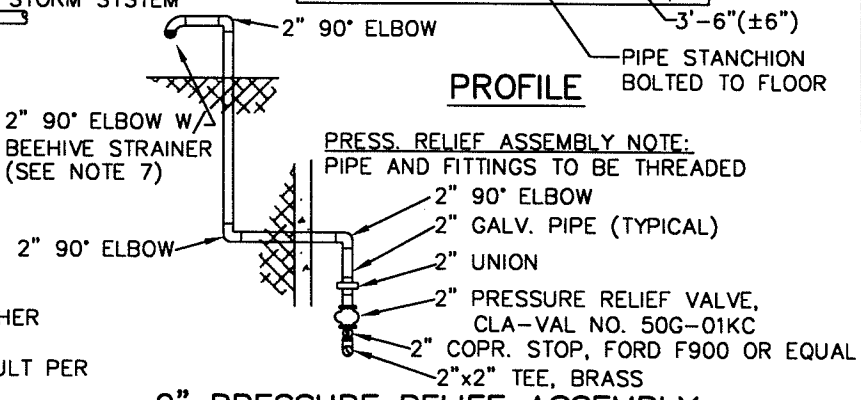

2" PRESSURE RELIEF ASSEMBLY

NOTES:

1. SIZING OF VALVES WILL BE MODIFIED FOR OTHER SIZES OF PIPE.
2. GALVANIZED LADDER TO BE SECURED TO VAULT PER STD. DTL. NO. W-17.
3. ALL P.R.V.s SHALL HAVE OPENING/CLOSING SPEED CONTROLS, EPOXY COATED BODY AND VALVE POSITION INDICATOR, CLA-VAL X101.
4. PILOT CONTROLS SHALL BE ON SIDE OF P.R.V. FACING INTERIOR OF VAULT TO PROVIDE EASY ACCESS.
5. ALL 90G MODEL CLA-VAL PRVs 3" & SMALLER SHALL BE EQUIPPED W/STAINLESS STEEL TRIM (SEAT, STEM & COVER BEARING).
6. SEAL ALL PIPE PENETRATIONS THROUGH VAULT W/WATER-TIGHT GROUT.
7. PRESSURE RELIEF DISCHARGE DOWNSPOUT SHALL DIRECT WATER TOWARDS CENTER OF INLET GRATE.

JULY, 1998 NO SCALE

City of Bellevue WATER UTILITIES

TITLE

STANDARD PRESSURE REDUCING STATION

NO. W-16

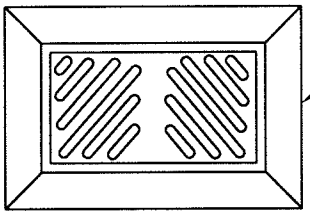

PROVIDE CONCRETE FUNNEL TO CONTAIN WATER FROM PRESSURE RELIEF DISCHARGE.

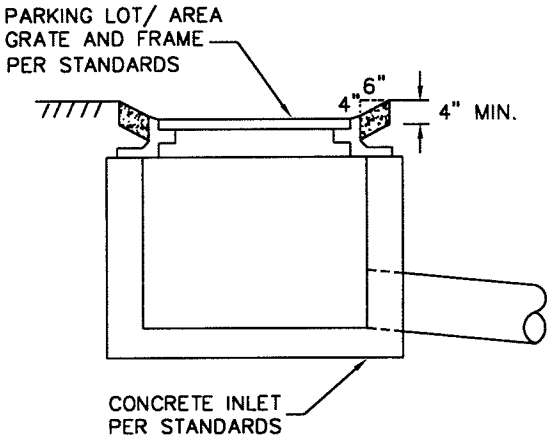

PRESSURE RELIEF DRAIN

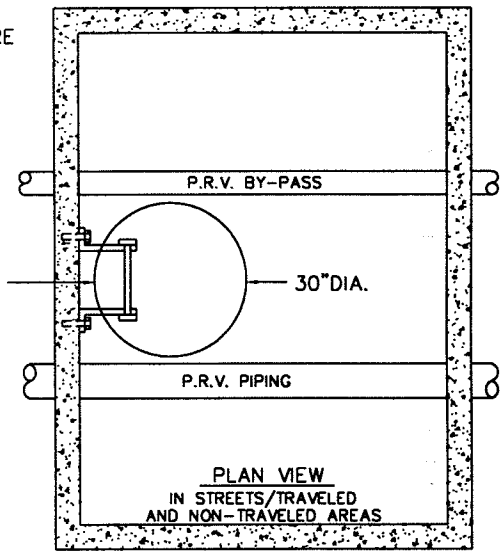

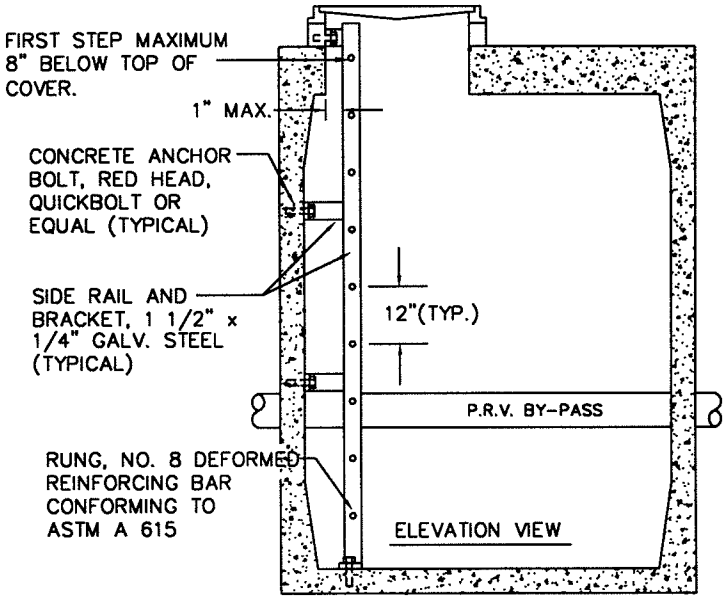

NOTES:

1. LADDER TO BE SECURED TO VAULT WALL AT 3 LOCATIONS
2. ALL LADDER PARTS TO BE GALVANIZED CONFORMING TO ASTM A 123
3. LOCATE PRESSURE RELIEF DRAIN OUTSIDE PEDESTRIAN AND TRAFFIC AREAS.

City of Bellevue — WATER UTILITIES

TITLE

PRESSURE REDUCING STATION ACCESS LADDER AND PRESSURE RELIEF DRAIN

NO. W-17

JULY, 1998 — NO SCALE

P.R.V. SHALL HAVE AN INTEGRAL BYPASS

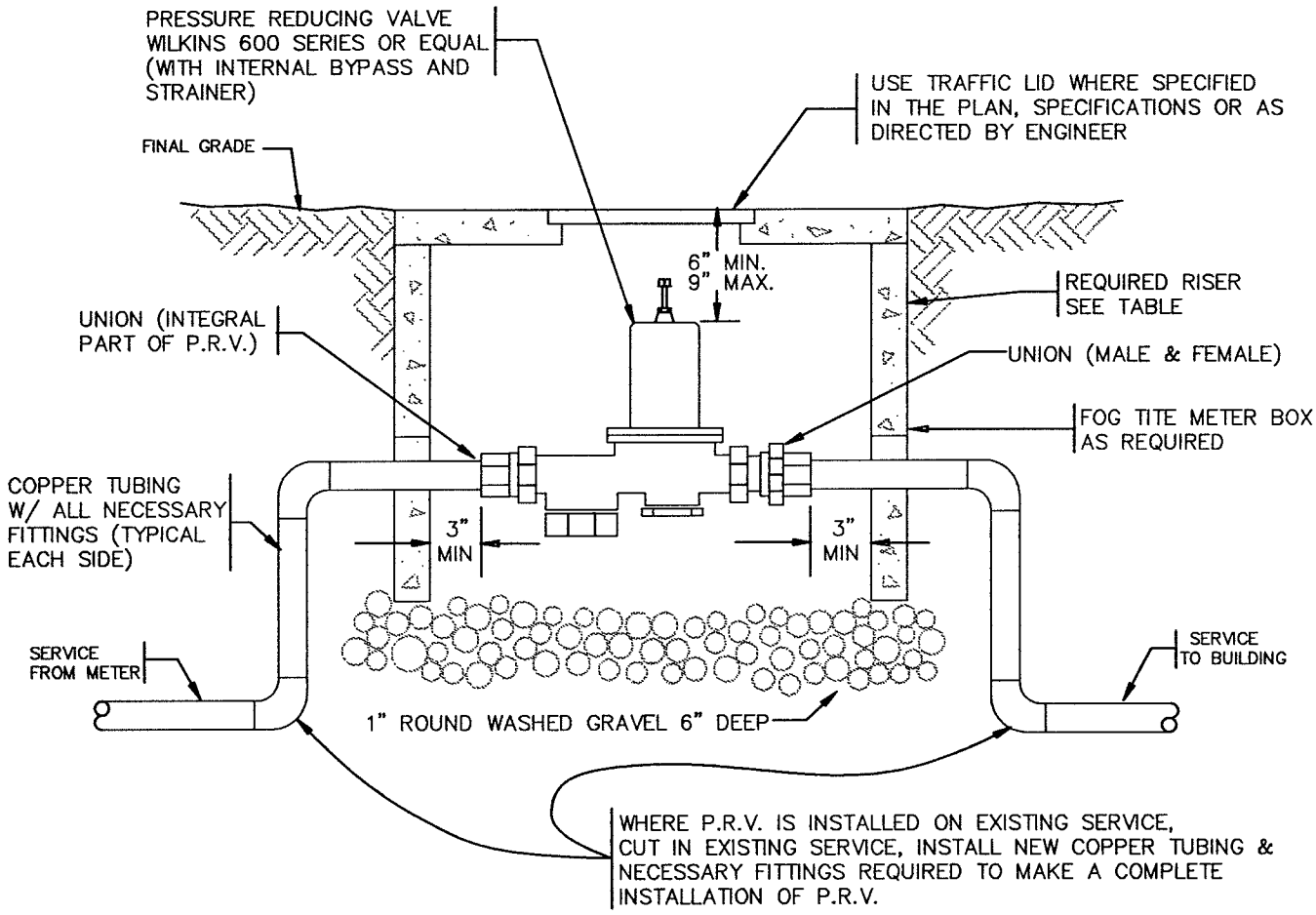

P.R.V. SIZE	FOG TITE METER BOX NO.	RISER REQUIRED
2"	2	12"
1 1/2"	2	12"
1 1/4"	1	6"
1"	1	6"
3/4"	1	4"
1/2"	1	4"

City of Bellevue

WATER UTILITIES

TITLE

INDIVIDUAL PRESSURE REDUCING VALVE ASSEMBLY (RESIDENTIAL)

DECEMBER 14, 1995

NO SCALE

NO. W-18

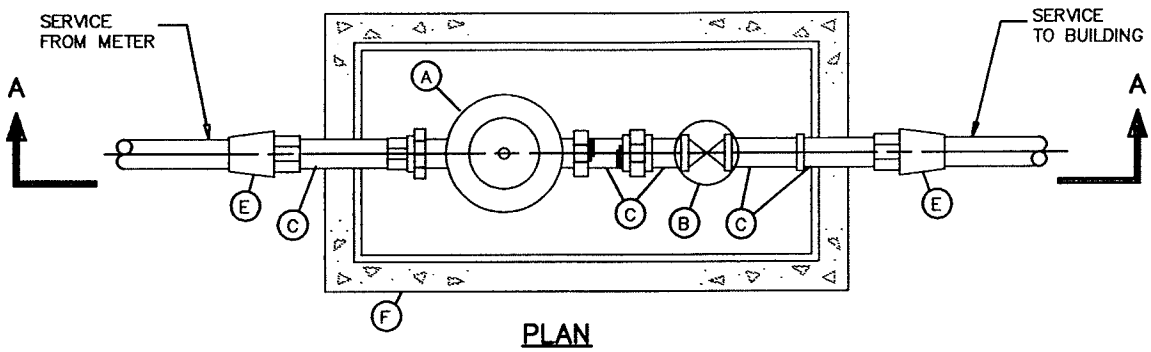

PLAN

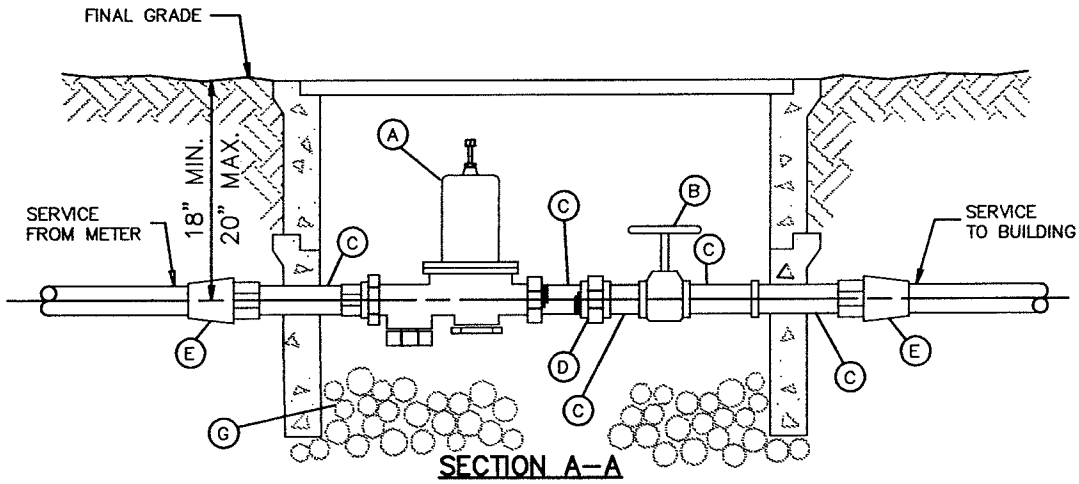

SECTION A–A

BILL OF MATERIALS

- (A) PRESSURE REGULATOR – WILKINS 600 SERIES OR EQUAL (WITH INTERNAL BYPASS AND STRAINER)
- (B) BRONZE GATE VALVE, 125–POUND, SOLID WEDGE OR DOUBLE DISC, WITH HANDWHEEL, OHIO BRASS, GRINNELL, OR EQUAL
- (C) NIPPLE x 2 1/2" LONG, MALE.
- (D) UNION, FEMALE.
- (E) ADAPTER, FEMALE x COMPRESSION FITTING FOR COPPER.
- (F) METER BOX FOR 1" INSTALLATION: FOGTITE B–10T IN NONTRAVELLED AREAS OR SIDEWALK. OLYMPIC FOUNDRY SM30 (18 3/4"x31"x16") IN AREAS WITH VEHICULAR TRAFFIC.
  FOR 1 1/2" & 2" INSTALLATION:
  17"x28" METER BOX W/TRAFFIC COVER AND 12" RISER, FOG TITE NO. 2T
- (G) 1" ROUND WASHED GRAVEL, 8" MIN. DEPTH.

NOTES:

1. PRESSURE REGULATOR SIZE AS SPECIFIED OR SHOWN ON PLAN.
2. SIZES FOR ITEMS (B) THROUGH (E) SHALL CORRESPOND TO THE SPECIFIED SIZE OF THE PRESSURE REGULATOR.
3. ALL FITTINGS AND NIPPLES ARE BRASS WITH IRON PIPE THREADS.

City of Bellevue — WATER UTILITIES

TITLE

INDIVIDUAL PRESSURE REDUCING VALVE ASSEMBLY (MULTI–FAMILY OR COMMERCIAL) NO. W–19

DECEMBER 20, 1995 NO SCALE

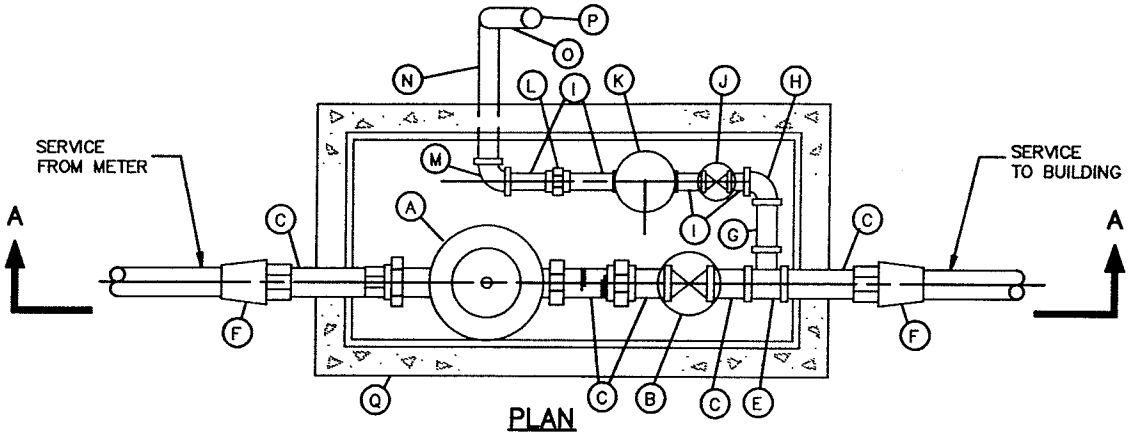

PLAN

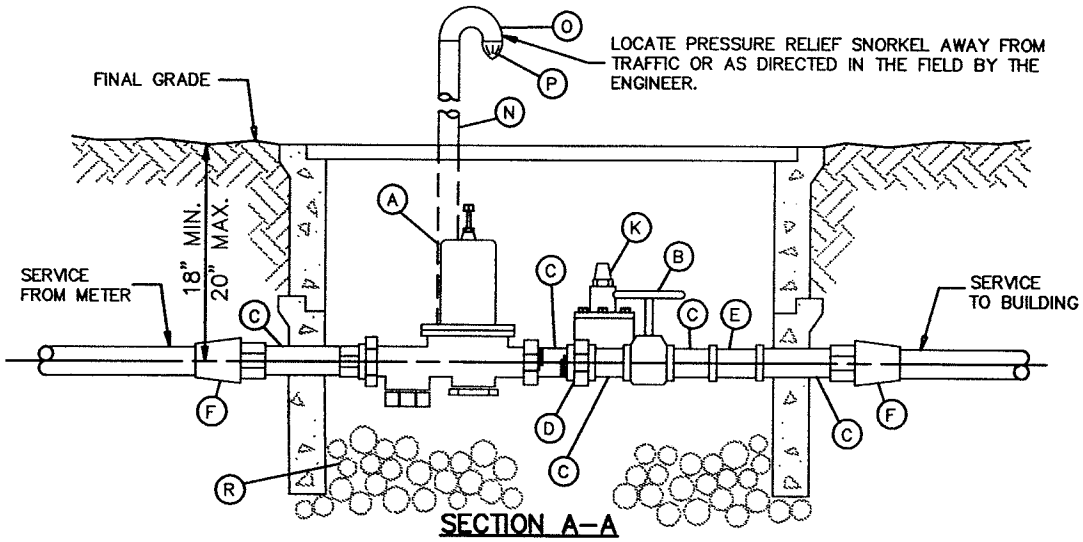

SECTION A–A

BILL OF MATERIALS

- (A) PRESSURE REGULATOR – WILKINS 600 SERIES OR EQUAL (WITH INTEGRAL BYPASS AND STRAINER)
- (B) BRONZE GATE VALVE, 125–POUND, SOLID WEDGE OR DOUBLE DISC, W/HANDWHEEL, OHIO BRASS, GRINNELL OR EQUAL.
- (C) NIPPLE x 2 1/2" LONG MALE.
- (D) UNION, FEMALE.
- (E) REDUCING TEE x 3/4" DIAMETER BRANCH, FEMALE.
- (F) ADAPTER, FEMALE x COMPRESSION FITTING FOR COPPER.
- (G) 3/4" NIPPLE x LENGTH TO FIT, MALE.
- (H) 3/4" x 90° ELBOW, FEMALE.
- (I) 3/4" x 2 1/2" NIPPLE, MALE.
- (J) 3/4" BRONZE GATE VALVE, SOLID WEDGE TYPE – MUELLER H–10914.
- (K) 3/4" PRESSURE RELIEF VALVE – CLAVAL 55 F
- (L) 3/4" UNION, FEMALE.
- (M) 2"x 3/4" 90° ELBOW, FEMALE.
- (N) 2" G.I. PIPE x LENGTH TO FIT AS DIRECTED, 10' MAX. INTEGRATED LENGTH.
- (O) 2" OPEN PATTERN RETURN BEND, G.I.
- (P) 2" BEEHIVE STRAINER.
- (Q) 17"x 28" METER BOX W/ TRAFFIC COVER AND 12" RISER, FOG TITE NO. 2T. (SEE NOTE 4.)
- (R) 1" ROUND WASHED GRAVEL, 8" MIN. DEPTH.

NOTES:

1. PRESSURE REGULATOR SIZE AS SPECIFIED OR SHOWN ON PLAN.
2. SIZES FOR ITEMS (B) THROUGH (F) SHALL CORRESPOND TO THE SPECIFIED SIZE OF THE PRESSURE REGULATOR.
3. FITTINGS AND NIPPLES ARE BRASS WITH IRON PIPE THREADS, UNLESS OTHERWISE SHOWN.
4. FOR 2" INSTALLATION, LARGER METER BOX IS REQUIRED, MINIMUM INSIDE LENGTH OF BOX SHALL BE 32".

DECEMBER 20, 1995 NO SCALE

City of Bellevue WATER UTILITIES

TITLE

INDIVIDUAL PRESSURE REDUCING VALVE ASSEMBLY WITH PRESSURE RELIEF (MULTI–FAMILY OR COMMERCIAL)

NO. W–20

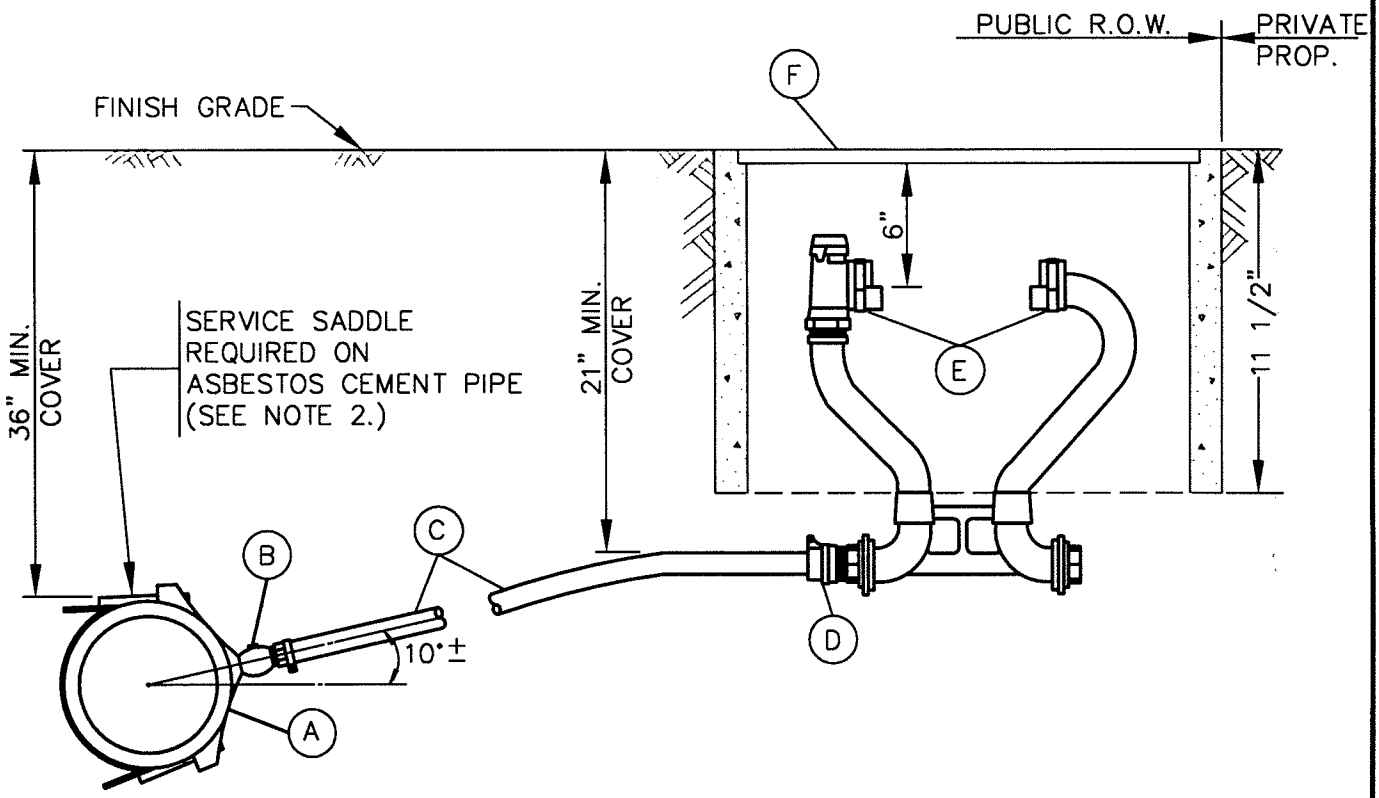

HORIZONTAL METER SETTER INSTALLATION

(A) PAINTED HIGH TENSILE D.I. SERVICE SADDLE W/ STAINLESS STEEL STRAP, 1" AWWA TAPER (CC) TAP, ROMAC 101S, OR EQUAL, SIZE AS REQUIRED.

(B) CORPORATION STOP, 1" AWWA TAPER (CC) INLET BY 1" PACK JOINT (COMPRESSION FITTING) FOR COPPER OUTLET, FORD F1000, FORD FB1000, MUELLER NO. H-15008, OR EQUAL.

(C) 1" COPPER TUBING, TYPE K.

(D) COUPLING, 3/4" MALE IRON PIPE THREAD BY 1" PACK JOINT (COMPRESSION FITTING) FOR COPPER, FORD C84-34, MUELLER NO. H-15428, OR EQUAL.

(E) 5/8" X 3/4" METER SETTER WITH DOUBLE (DUAL) PURPOSE COUPLINGS AND ANGLE METER VALVE (ANGLE STOP) WITH PADLOCK WINGS, FORD V72-12W, MUELLER 5/8" X 3/4" NO. H-1404 X 12 WITH MULTIPURPOSE CONNECTION NO. H-14222, OR EQUAL.

(F) METER BOX, EQUAL TO:
FOG TITE 1-D IN NONTRAVELED AREAS.
OLYMPIC FOUNDRY SM29 IN SIDEWALK AND AREAS WITH VEHICULAR TRAFFIC.

NOTES:

1. SERVICE LINE SHALL BE PERPENDICULAR TO THE WATERMAIN, UNLESS OTHERWISE APPROVED BY THE ENGINEER.
2. SERVICE SADDLE INSTALLED AT CONTRACTOR'S OPTION ON CLASS 52 OR THICKER D.I. PIPE, THE CORP. STOP MAY BE TAPPED DIRECTLY INTO THE PIPE.
3. APPROVED BACKFLOW PREVENTION MUST BE INSTALLED WITH IRRIGATION SERVICE PER D.S.H.S. REQUIREMENTS. IRRIGATION SYSTEM SHALL NOT BE PUT INTO SERVICE UNTIL THE BACKFLOW PREVENTION DEVICE IS APPROVED BY A CITY OF BELLEVUE WATER QUALITY TECHNICIAN.
4. METER WILL BE SUPPLIED AND INSTALLED BY THE CITY OF BELLEVUE.

JULY, 1998 NO SCALE

City of Bellevue WATER UTILITIES

TITLE 1" x 3/4"
SINGLE WATER SERVICE OR
DOMESTIC IRRIGATION SERVICE
(HORIZONTAL METER SETTER)

NO. W-21

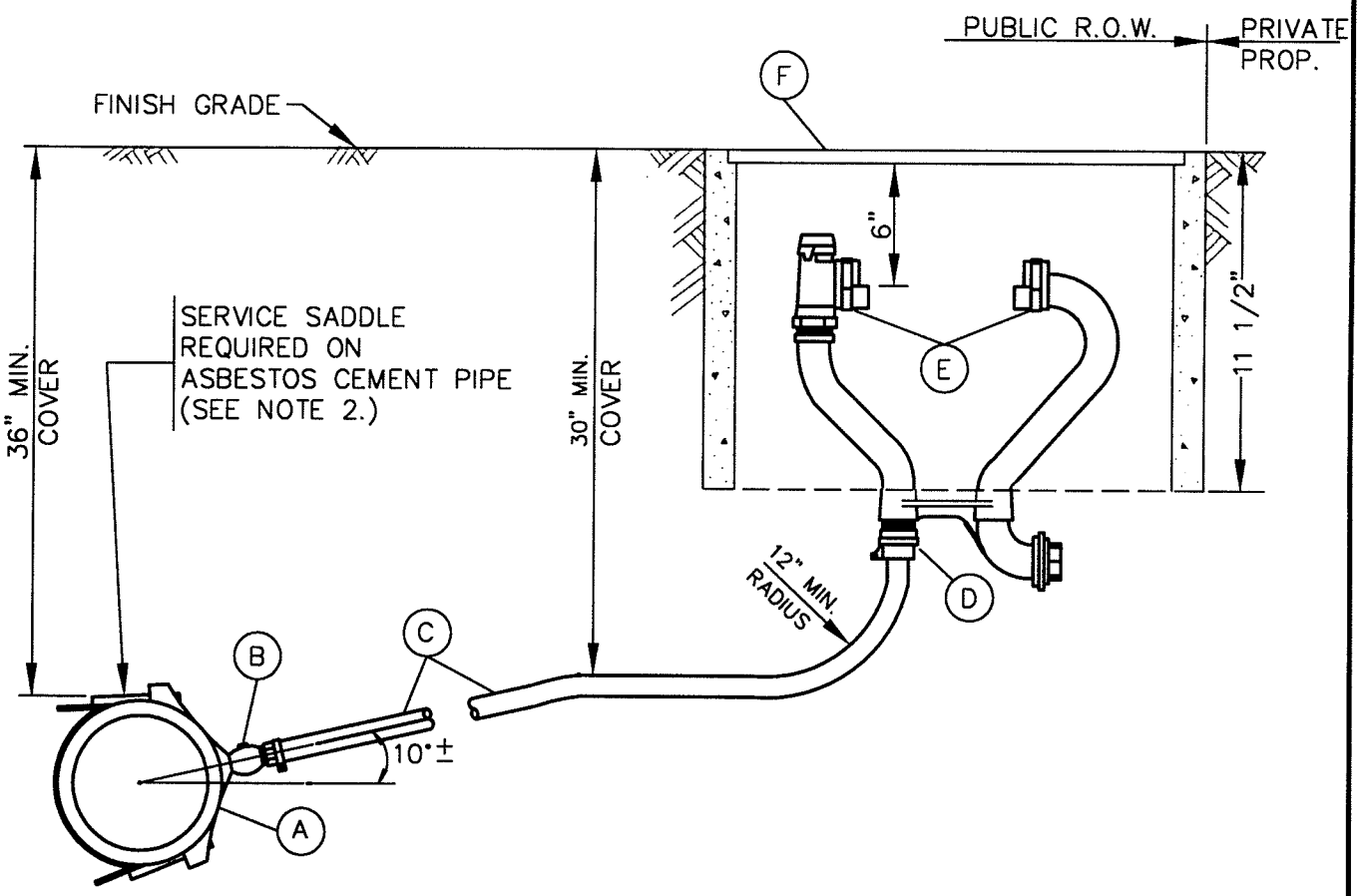

VERTICAL METER SETTER INSTALLATION

(A) PAINTED HIGH TENSILE D.I. SERVICE SADDLE W/ STAINLESS STEEL STRAP, 1" AWWA TAPER (CC) TAP, ROMAC 101S, OR EQUAL, SIZE AS REQUIRED.

(B) CORPORATION STOP, 1" AWWA TAPER (CC) INLET BY 1" PACK JOINT (COMPRESSION FITTING) FOR COPPER OUTLET, FORD F1000, FORD FB1000, MUELLER NO. H-15008, OR EQUAL.

(C) 1" COPPER TUBING, TYPE K.

(D) COUPLING, 3/4" MALE IRON PIPE THREAD BY 1" PACK JOINT (COMPRESSION FITTING) FOR COPPER, FORD C84-34, MUELLER NO. H-15428, OR EQUAL.

(E) 5/8" x 3/4" ANGLE METER SETTER WITH DOUBLE (DUAL) PURPOSE COUPLINGS AND ANGLE METER VALVE (ANGLE STOP) WITH PADLOCK WINGS, VERTICAL INLET BY HORIZONTAL OUTLET, FORD V72-82 x 12W, OR EQUAL.

(F) METER BOX, EQUAL TO:
FOG TITE 1-D IN NONTRAVELED AREAS.
OLYMPIC FOUNDRY SM29 IN SIDEWALK AND AREAS WITH VEHICULAR TRAFFIC.

NOTES:

1. SERVICE LINE SHALL BE PERPENDICULAR TO THE WATERMAIN, UNLESS OTHERWISE APPROVED BY THE ENGINEER.
2. SERVICE SADDLE INSTALLED AT CONTRACTOR'S OPTION ON CLASS 52 OR THICKER D.I. PIPE, THE CORP. STOP MAY BE TAPPED DIRECTLY INTO THE PIPE.
3. APPROVED BACKFLOW PREVENTION MUST BE INSTALLED WITH IRRIGATION SERVICE PER D.S.H.S. REQUIREMENTS. IRRIGATION SYSTEM SHALL NOT BE PUT INTO SERVICE UNTIL THE BACKFLOW PREVENTION DEVICE IS APPROVED BY A CITY OF BELLEVUE WATER QUALITY TECHNICIAN.
4. METER WILL BE SUPPLIED AND INSTALLED BY THE CITY OF BELLEVUE.

JULY, 1998 NO SCALE

City of Bellevue WATER UTILITIES

TITLE 1" x 3/4" SINGLE WATER SERVICE OR DOMESTIC IRRIGATION SERVICE (VERTICAL METER SETTER)

NO. W-22

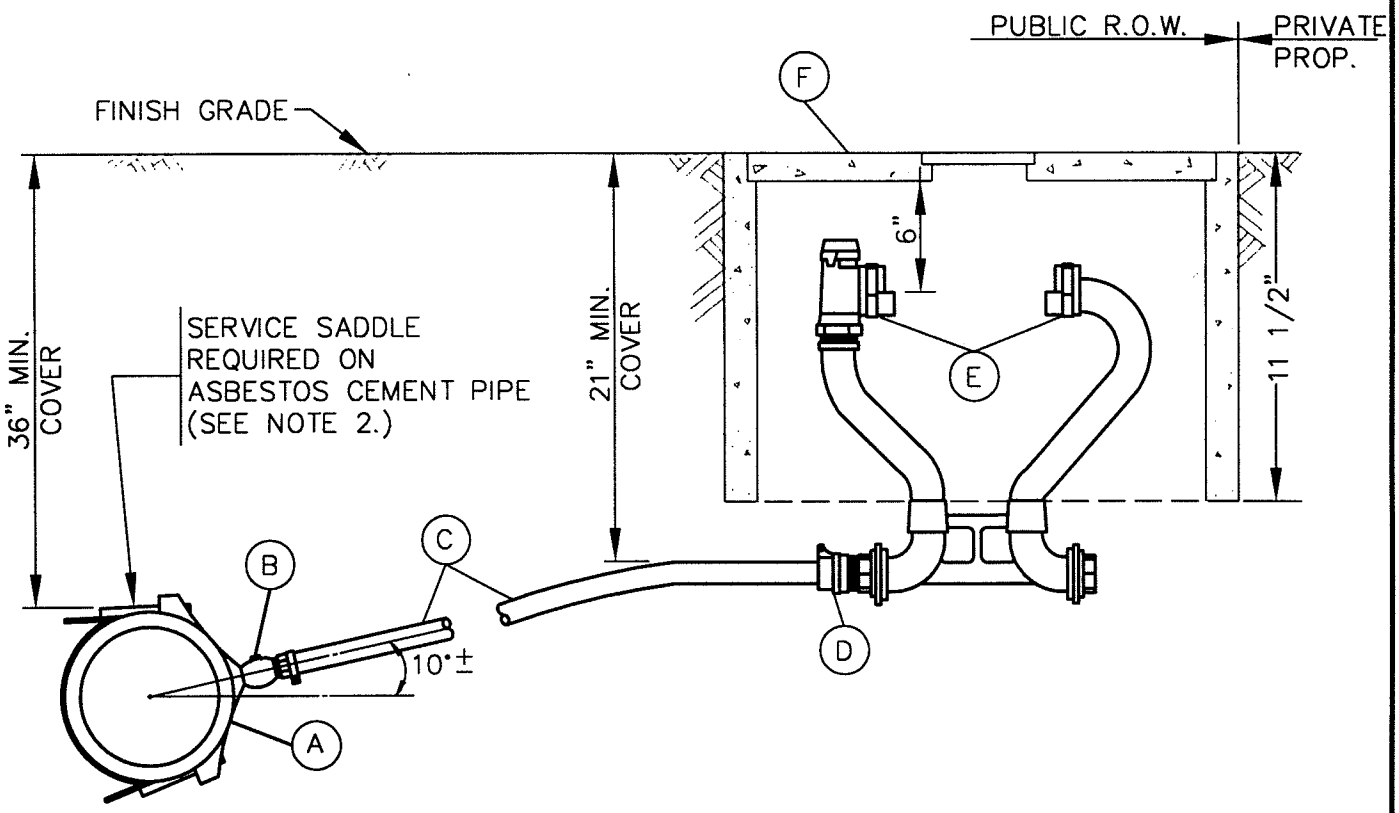

HORIZONTAL METER SETTER INSTALLATION

(A) PAINTED HIGH TENSILE D.I. SERVICE SADDLE W/ STAINLESS STEEL STRAP, 1" AWWA TAPER (CC) TAP, ROMAC 101S, OR EQUAL, SIZE AS REQUIRED.

(B) CORPORATION STOP, 1" AWWA TAPER (CC) INLET BY 1" PACK JOINT (COMPRESSION FITTING) FOR COPPER OUTLET, FORD F1000, FORD FB1000, MUELLER NO. H-15008, OR EQUAL.

(C) 1" COPPER TUBING, TYPE K.

(D) COUPLING, 1" MALE IRON PIPE THREAD BY 1" PACK JOINT (COMPRESSION FITTING) FOR COPPER, FORD C84-44, MUELLER NO. H-15428, OR EQUAL.

(E) 1" METER SETTER WITH DOUBLE (DUAL) PURPOSE COUPLINGS AND ANGLE METER VALVE (ANGLE STOP) WITH PADLOCK WINGS, FORD V74-12W, MUELLER 1" NO. H-1404 X 12 WITH MULTIPURPOSE CONNECTION NO. H-14222, OR EQUAL.

(F) METER BOX, EQUAL TO:
FOG TITE B-10D IN NONTRAVELED AREAS.
OLYMPIC FOUNDRY SM30 IN SIDEWALK AND IN AREAS WITH VEHICULAR TRAFFIC

NOTES:

1. SERVICE LINE SHALL BE PERPENDICULAR TO THE WATERMAIN, UNLESS OTHERWISE APPROVED BY THE ENGINEER.
2. SERVICE SADDLE INSTALLED AT CONTRACTOR'S OPTION ON CLASS 52 OR THICKER D.I. PIPE. THE CORP. STOP MAY BE TAPPED DIRECTLY INTO THE PIPE.
3. APPROVED BACKFLOW PREVENTION MUST BE INSTALLED WITH IRRIGATION SERVICE PER D.S.H.S. REQUIREMENTS. IRRIGATION SYSTEM SHALL NOT BE PUT INTO SERVICE UNTIL THE BACKFLOW PREVENTION DEVICE IS APPROVED BY A CITY OF BELLEVUE WATER QUALITY TECHNICIAN.
4. METER WILL BE SUPPLIED AND INSTALLED BY THE CITY OF BELLEVUE.

JULY, 1998 NO SCALE

City of Bellevue WATER UTILITIES

TITLE 1" x 1"
SINGLE WATER SERVICE OR
DOMESTIC IRRIGATION SERVICE
(HORIZONTAL METER SETTER)

NO. W-23

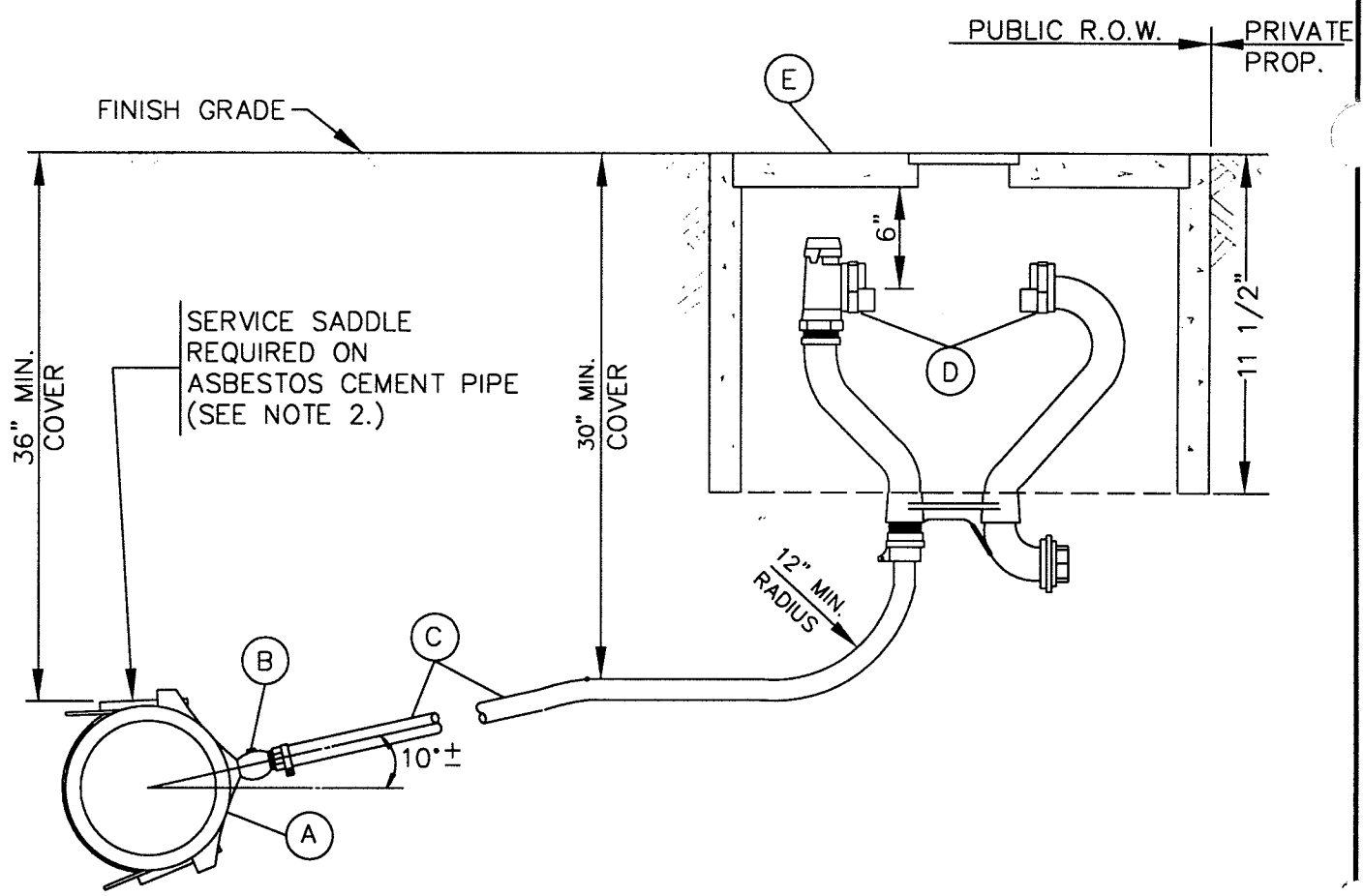

VERTICAL METER SETTER INSTALLATION

(A) PAINTED HIGH TENSILE D.I. SERVICE SADDLE W/ STAINLESS STEEL STRAP, 1" AWWA TAPER (CC) TAP, ROMAC 101S, OR EQUAL, SIZE AS REQUIRED.

(B) CORPORATION STOP, 1" AWWA TAPER (CC) INLET BY 1" PACK JOINT (COMPRESSION FITTING) FOR COPPER OUTLET, FORD F1000, FORD FB1000, MUELLER NO. H-15008, OR EQUAL.

(C) 1" COPPER TUBING, TYPE K.

(D) 1" ANGLE METER SETTER, 1" PACK JOINT (COMPRESSION FITTING) FOR COPPER INLET BY DOUBLE (DUAL) PURPOSE COUPLING OUTLET, ANGLE METER VALVE (ANGLE STOP) WITH PADLOCK WINGS, VERTICAL INLET BY HORIZONTAL OUTLET, FORD V74-84 x 12W, OR EQUAL.

(E) METER BOX, EQUAL TO:
FOG TITE B-10D IN NONTRAVELED AREAS.
OLYMPIC FOUNDRY SM30 IN SIDEWALK AND IN AREAS WITH VEHICULAR TRAFFIC

NOTES:

1. SERVICE LINE SHALL BE PERPENDICULAR TO THE WATERMAIN, UNLESS OTHERWISE APPROVED BY THE ENGINEER.
2. SERVICE SADDLE INSTALLED AT CONTRACTOR'S OPTION ON CLASS 52 OR THICKER D.I. PIPE, THE CORP. STOP MAY BE TAPPED DIRECTLY INTO THE PIPE.
3. APPROVED BACKFLOW PREVENTION MUST BE INSTALLED WITH IRRIGATION SERVICE PER D.S.H.S. REQUIREMENTS. IRRIGATION SYSTEM SHALL NOT BE PUT INTO SERVICE UNTIL THE BACKFLOW PREVENTION DEVICE IS APPROVED BY A CITY OF BELLEVUE WATER QUALITY TECHNICIAN.
4. METER WILL BE SUPPLIED AND INSTALLED BY THE CITY OF BELLEVUE.

JULY, 1998 NO SCALE

City of Bellevue WATER UTILITIES

TITLE 1" x 1"
SINGLE WATER SERVICE OR
DOMESTIC IRRIGATION SERVICE
(VERTICAL METER SETTER)

NO. W-24

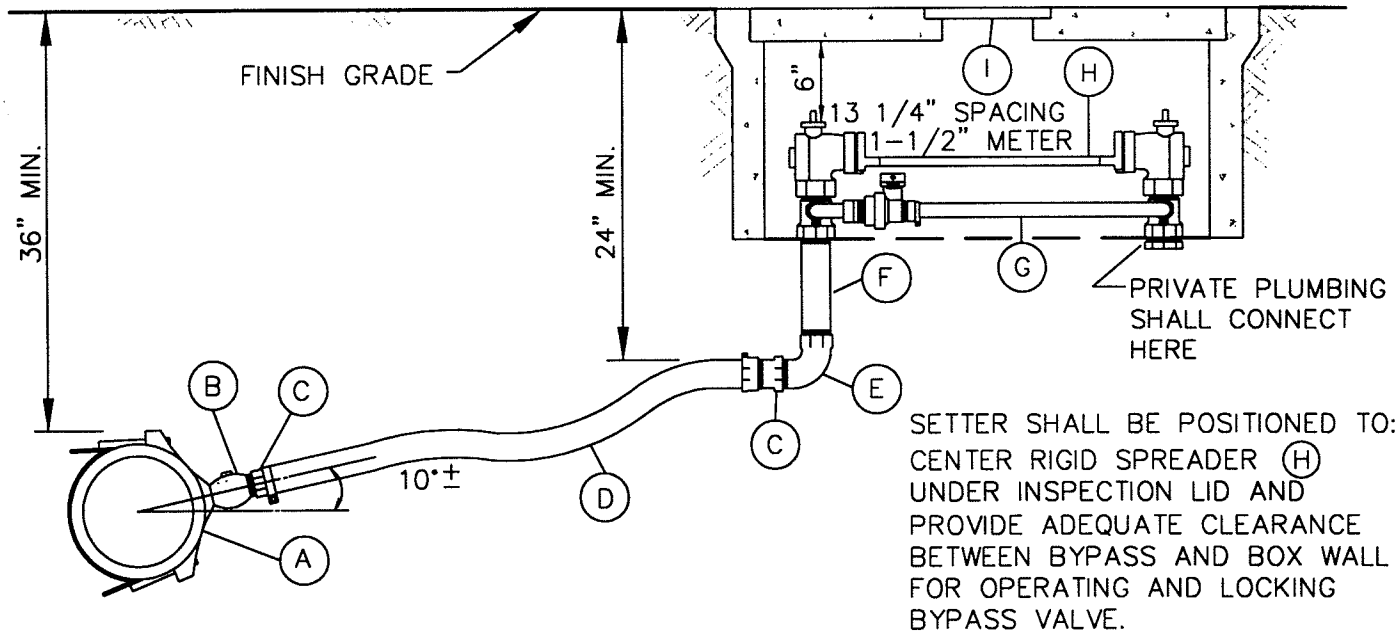

(A) PAINTED HIGH TENSILE D.I. SERVICE SADDLE W/ DOUBLE STAINLESS STEEL STRAP, 1 1/2" AWWA TAPER (CC) TAP, ROMAC 202S, OR EQUAL, SIZE AS REQUIRED.

(B) CORPORATION STOP, 1 1/2" AWWA TAPER (CC) INLET BY 1 1/2" MALE IRON PIPE THREAD OUTLET WITH BALL VALVE (OR EQUAL LOW-FRICTION VALVE), FORD BALLCORP FB400, MUELLER ORISEAL NO. H-9968, OR EQUAL.

(C) COUPLING, 1 1/2" FEMALE IRON PIPE THREAD BY 1 1/2" PACK JOINT (COMPRESSION FITTING) FOR COPPER, FORD C14-66, MUELLER NO. H-15451, OR EQUAL.

(D) 1 1/2" COPPER TUBING, TYPE K.

(E) 1 1/2" STREET ELL, BRASS, MALE IRON PIPE THREAD BY FEMALE IRON PIPE THREAD.

(F) 1 1/2" NIPPLE, BRASS, M.I.P.T. X M.I.P.T., 6" LONG OR AS REQUIRED TO MEET PROPER GRADE.

(G) 1 1/2" BRASS AND COPPER METER SETTER WITH HIGH BYPASS:
- -FLANGED BALL METER VALVE ON INLET AND OUTLET
- -BALL VALVE ON BYPASS
- -PADLOCK WINGS ON ALL VALVES
- -VERTICAL INLET AND OUTLET, F.I.P.T.
- -BUSHING INCLUDED ON OUTLET

FORD VVB66-6 WITH HIGH BYPASS, OR EQUAL.

(H) RIGID METER SPREADER, SUPPLIED BY CITY OF BELLEVUE, TO BE INSTALLED IN METER SETTER BY CONTRACTOR.

(I) METER BOX, EQUAL TO:
FOGTITE NO. 2 IN NONTRAVELED AREAS.
OLYMPIC FOUNDRY SM30 IN SIDEWALK AND AREAS WITH VEHICULAR TRAFFIC.

NOTES:

1. SERVICE LINE SHALL BE PERPENDICULAR TO THE WATERMAIN, UNLESS OTHERWISE APPROVED BY THE ENGINEER.
2. BYPASS WILL BE LOCKED OFF BY CONSTRUCTION INSPECTOR WHEN METER SPREADER IS INSTALLED.
3. METER WILL BE SUPPLIED AND INSTALLED BY THE CITY OF BELLEVUE.
4. 1 1/2" PACK JOINT BY FEMALE IRON PIPE ELL COUPLING (FORD L14-66, MUELLER H15-533.15, OR EQUAL) MAY BE SUBSTITUTED FOR STREET ELL/COUPLING COMBINATION (C) AND (E).

JULY, 1998 NO SCALE

City of Bellevue WATER UTILITIES

TITLE

1 1/2" DOMESTIC WATER SERVICE

NO. W-25

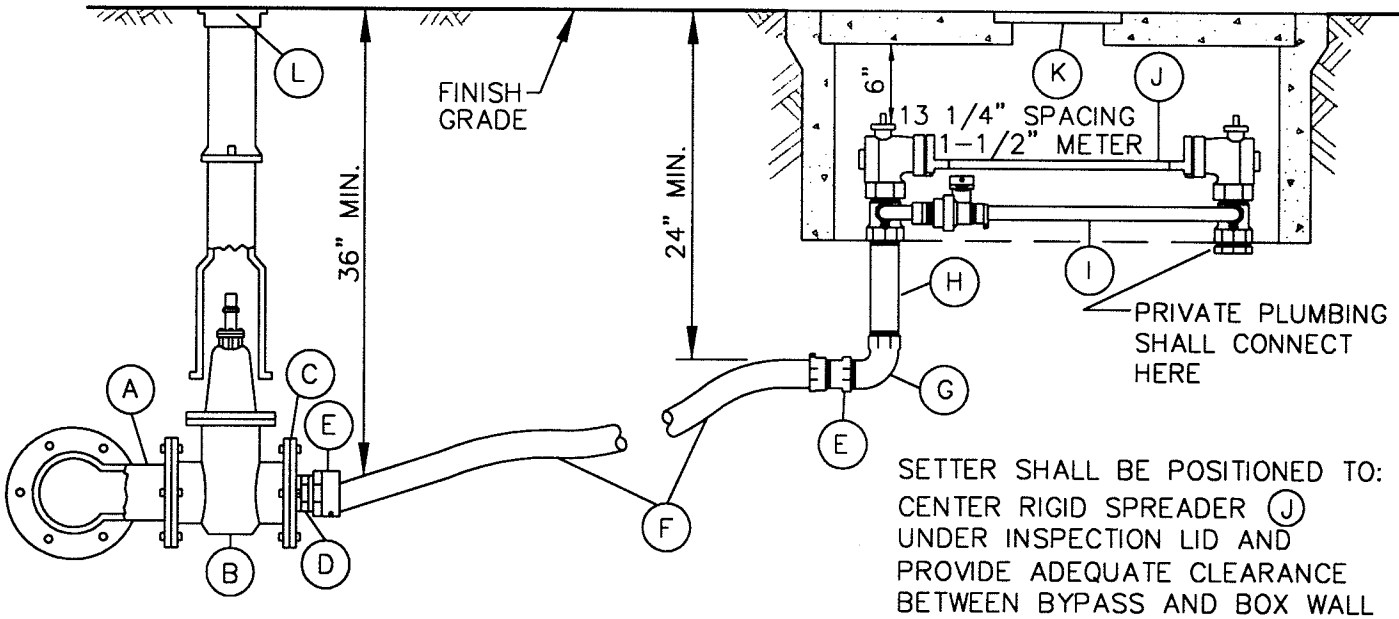

SETTER SHALL BE POSITIONED TO: CENTER RIGID SPREADER (J) UNDER INSPECTION LID AND PROVIDE ADEQUATE CLEARANCE BETWEEN BYPASS AND BOX WALL FOR OPERATING AND LOCKING BYPASS VALVE.

(A) CAST IRON TEE WITH 4"BRANCH, MJxFL (ON NEW MAINS), TAPPING TEE WITH 4" BRANCH, FL (ON EXISTING MAINS).

(B) 4" GATE VALVE, FL.

(C) 4" REDUCING COMPANION FLANGE WITH 1 1/2" TAP.

(D) 1 1/2" NIPPLE, BRASS, M.I.P.T. x M.I.P.T.

(E) COUPLING, 1 1/2" FEMALE IRON PIPE THREAD BY 1 1/2" PACK JOINT (COMPRESSION FITTING) FOR COPPER, FORD C14-66, MUELLER NO. H-15451, OR EQUAL.

(F) 1 1/2" COPPER TUBING, TYPE K.

(G) 1 1/2" STREET ELL, BRASS, MALE IRON PIPE THREAD BY FEMALE IRON PIPE THREAD.

(H) 1 1/2" NIPPLE, BRASS, M.I.P.T. x M.I.P.T., 6" LONG OR AS REQUIRED TO MEET PROPER GRADE.

(I) 1 1/2" BRASS AND COPPER METER SETTER WITH HIGH BYPASS:
- -FLANGED BALL METER VALVE ON INLET AND OUTLET
- -BALL VALVE ON BYPASS
- -PADLOCK WINGS ON ALL VALVES
- -VERTICAL INLET AND OUTLET, F.I.P.T.
- -BUSHING INCLUDED ON OUTLET

FORD VVB66-6 WITH HIGH BYPASS, OR EQUAL.

(J) RIGID METER SPREADER, SUPPLIED BY CITY OF BELLEVUE, TO BE INSTALLED IN METER SETTER BY CONTRACTOR.

(K) METER BOX, EQUAL TO:
FOGTITE NO. 2 IN NONTRAVELED AREAS.
OLYMPIC FOUNDRY SM30 IN SIDEWALK AND AREAS WITH VEHICULAR TRAFFIC.

(L) TWO PIECE CAST IRON VALVE BOX TO FIT, EQUAL TO RICH SEATTLE TYPE #045 - WITH RECESSED HANDLE LID.

NOTES:

1. SERVICE LINE SHALL BE PERPENDICULAR TO THE WATERMAIN, UNLESS OTHERWISE APPROVED BY THE ENGINEER.
2. BYPASS WILL BE LOCKED OFF BY CONSTRUCTION INSPECTOR WHEN METER SPREADER IS INSTALLED.
3. METER WILL BE SUPPLIED AND INSTALLED BY THE CITY OF BELLEVUE.
4. 1 1/2" PACK JOINT BY FEMALE IRON PIPE ELL COUPLING (FORD L14-66, MUELLER H15-533.15, OR EQUAL) MAY BE SUBSTITUTED FOR STREET ELL/COUPLING COMBINATION (E) AND (G).

JULY, 1998 NO SCALE

City of Bellevue WATER UTILITIES

TITLE

1 1/2" DOMESTIC WATER SERVICE
(C.B.D. & OTHER SENSITIVE AREAS)

NO. W-26

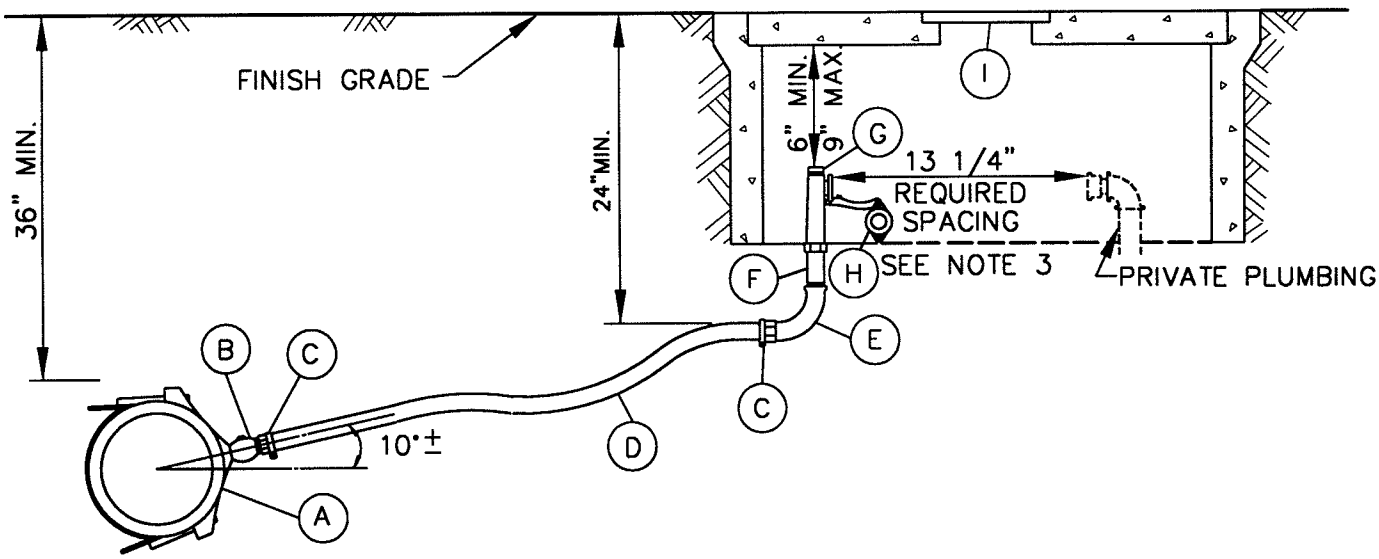

(A) PAINTED HIGH TENSILE D.I. SERVICE SADDLE W/ DOUBLE STAINLESS STEEL STAP, 1 1/2" AWWA TAPER (CC) TAP, ROMAC 202S, OR EQUAL, SIZE AS REQUIRED.

(B) CORPORATION STOP, 1-1/2" AWWA TAPER (CC) INLET BY 1-1/2" MALE IRON PIPE THREAD OUTLET WITH BALL VALVE (OR EQUAL LOW-FRICTION VALVE), FORD BALLCORP FB400, MUELLER ORISEAL NO. H-9968, OR EQUAL.

(C) COUPLING, 1-1/2" FEMALE IRON PIPE THREAD BY 1-1/2" PACK JOINT (COMPRESSION FITTING) FOR COPPER, FORD C14-66, MUELLER NO. H-15451, OR EQUAL.

(D) 1-1/2" COPPER TUBING, TYPE K.

(E) 1-1/2" STREET ELL, BRASS, MALE IRON PIPE THREAD BY FEMALE IRON PIPE THREAD.

(F) 1-1/2" NIPPLE, BRASS, M.I.P.T. x M.I.P.T., LENGTH AS REQUIRED TO MEET PROPER GRADE.

(G) 1-1/2" ANGLE METER VALVE WITH PADLOCK WINGS, FEMALE IRON PIPE BY FLANGED END FOR METER, FORD FV13-666W, MUELLER NO. H-14286, OR EQUAL.

(H) 1-1/2" COMPANION FLANGE, FORD NO. 6F FLANGE, OR EQUAL. TO BE WIRED OR SECURED TO ANGLE VALVE.

(I) METER BOX, EQUAL TO:
FOGTITE NO. 2 IN NONTRAVELED AREAS.
OLYMPIC FOUNDRY SM30 IN SIDEWALK AND AREAS WITH VEHICULAR TRAFFIC.

NOTES:

1. SERVICE LINE SHALL BE PERPENDICULAR TO THE WATERMAIN, UNLESS OTHERWISE APPROVED BY THE ENGINEER.
2. APPROVED BACKFLOW PREVENTION DEVICE MUST BE INSTALLED PER D.O.H. REQUIREMENTS. IRRIGATION OR FIRE SPRINKLER SYSTEM SHALL NOT BE PUT INTO SERVICE UNTIL THE BACKFLOW PREVENTION DEVICE IS APPROVED BY THE CITY OF BELLEVUE WATER QUALITY TECHNICIAN.
3. IF SERVICE IS PLUMBED ON CUSTOMER'S SIDE PRIOR TO METER SET, 13-1/4" SPACING MUST BE ALLOWED FOR METER.
4. METER WILL BE SUPPLIED AND INSTALLED BY THE CITY OF BELLEVUE.

City of Bellevue — WATER UTILITIES

TITLE

1 1/2" IRRIGATION OR FIRE SPRINKLER WATER SERVICE

JULY, 1998 — NO SCALE — NO. W-27

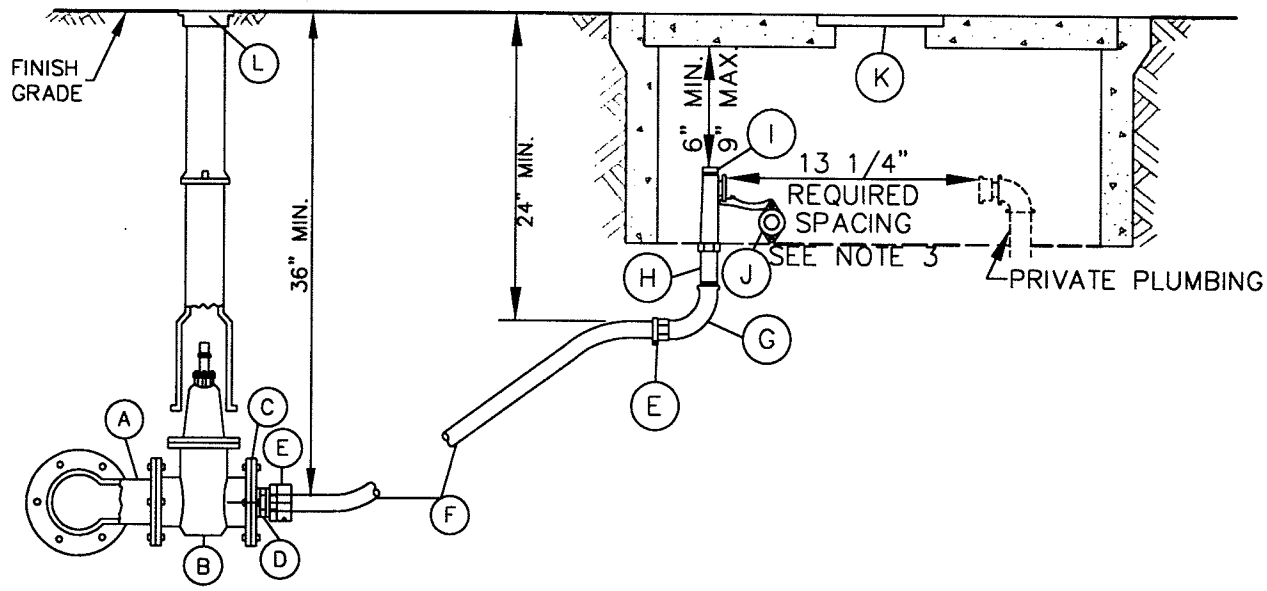

(A) CAST IRON TEE WITH 4" BRANCH, MJxFL (ON NEW MAINS), TAPPING TEE WITH 4" BRANCH, FL (ON EXISTING MAINS).

(B) 4" GATE VALVE, FL.

(C) 4" REDUCING COMPANION FLANGE WITH 1 1/2" TAP.

(D) 1 1/2" NIPPLE, BRASS, M.I.P.T. x M.I.P.T.

(E) COUPLING, 1 1/2" FEMALE IRON PIPE THRAED BY 1 1/2" PACK JOINT (COMPRESSION FITTING) FOR COPPER, FORD C14-66, MUELLER NO. H-15451, OR EQUAL.

(F) 1 1/2" COPPER TUBING, TYPE K.

(G) 1 1/2" STREET ELL, BRASS, MALE IRON PIPE THREAD BY FEMALE IRON PIPE THREAD.

(H) 1 1/2" NIPPLE, BRASS, M.I.P.T. x M.I.P.T., 6" LENGTH AS REQUIRED TO MEET PROPER GRADE.

(I) 1 1/2" ANGLE METER VALVE WITH PADLOCK WINGS, FEMALE IRON PIPE BY FLANGED END FOR METER, FORD FV13-666W, MUELLER NO. H-14286, OR EQUAL.

(J) 1 1/2" COMPANION FLANGE, FORD NO. 6F FLANGE, OR EQUAL. TO BE WIRED OR SECURED TO ANGLE VALVE.

(K) METER BOX, EQUAL TO:
FOGTITE NO. 2 IN NONTRAVELED AREAS.
OLYMPIC FOUNDRY SM30 IN SIDEWALK AND AREAS WITH VEHICULAR TRAFFIC.

(L) TWO PIECE CAST IRON VALVE BOX TO FIT, EQUAL TO RICH SEATTLE TYPE #045 - WITH RECESSED HANDLE LID.

NOTES:

1. SERVICE LINE SHALL BE PERPENDICULAR TO THE WATERMAIN, UNLESS OTHERWISE APPROVED BY THE ENGINEER.
2. APPROVED BACKFLOW PREVENTION DEVICE MUST BE INSTALLED PER D.O.H. REQUIREMENTS. IRRIGATION OR FIRE SPRINKLER SYSTEM SHALL NOT BE PUT INTO SERVICE UNTIL THE BACKFLOW PREVENTION DEVICE IS APPROVED BY THE CITY OF BELLEVUE WATER QUALITY TECHNICIAN.
3. IF SERVICE IS PLUMBED ON CUSTOMER'S SIDE PRIOR TO METER SET, 13-1/4" SPACING MUST BE ALLOWED FOR METER.
4. METER WILL BE SUPPLIED AND INSTALLED BY THE CITY OF BELLEVUE.

City of Bellevue

WATER UTILITIES

TITLE 1 1/2" IRRIGATION OR FIRE SPRINKLER WATER SERVICE (C.B.D. & OTHER SENSITIVE AREAS)

JULY, 1998

NO SCALE

NO. W-28

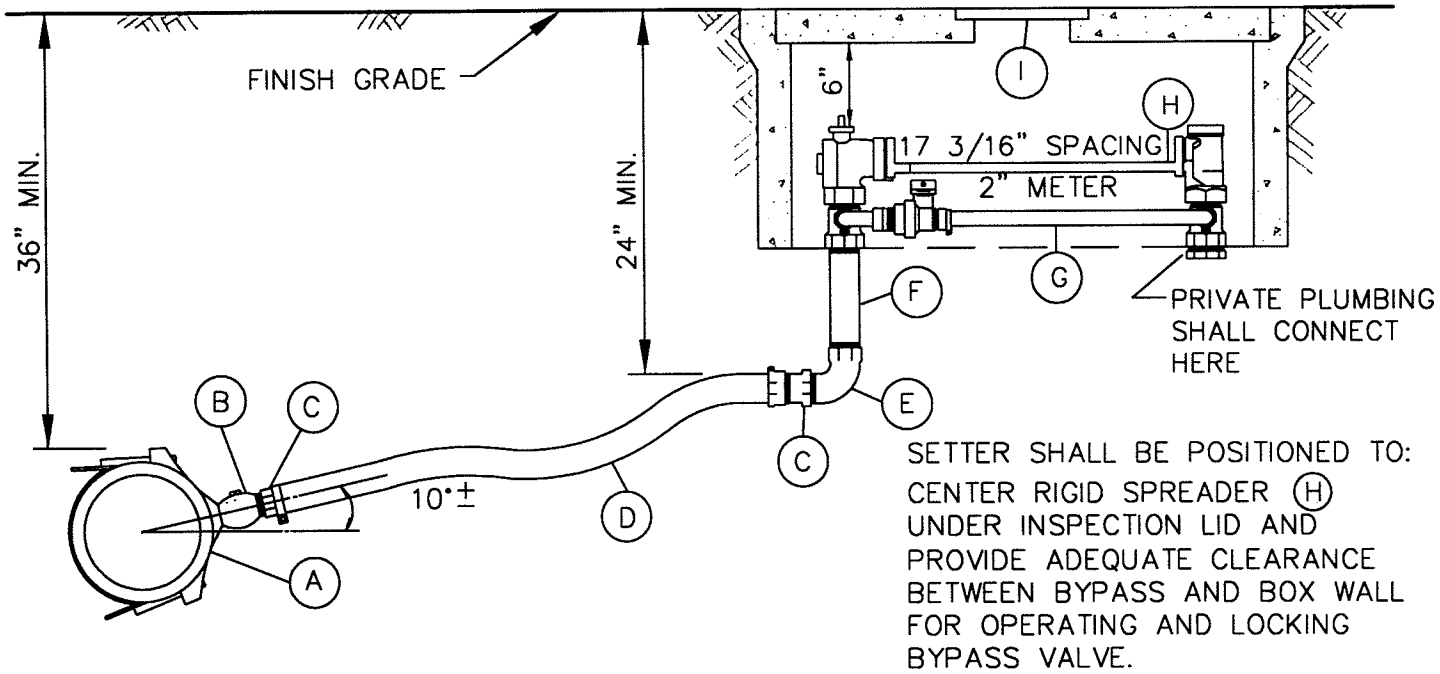

SETTER SHALL BE POSITIONED TO: CENTER RIGID SPREADER (H) UNDER INSPECTION LID AND PROVIDE ADEQUATE CLEARANCE BETWEEN BYPASS AND BOX WALL FOR OPERATING AND LOCKING BYPASS VALVE.

(A) PAINTED HIGH TENSILE D.I. SERVICE SADDLE W/ DOUBLE STAINLESS STEEL STRAP, 2" AWWA TAPER (CC) TAP, ROMAC 202S, OR EQUAL, SIZE AS REQUIRED.

(B) CORPORATION STOP, 2" AWWA TAPER (CC) INLET BY 2" MALE IRON PIPE THREAD OUTLET WITH BALL VALVE (OR EQUAL LOW-FRICTION VALVE), FORD BALLCORP FB400, MUELLER ORISEAL NO. H-9968, OR EQUAL.

(C) COUPLING, 2" FEMALE IRON PIPE THREAD BY 2" PACK JOINT (COMPRESSION FITTING) FOR COPPER, FORD C14-77, MUELLER NO. H-15451, OR EQUAL.

(D) 2" COPPER TUBING, TYPE K.

(E) 2" STREET ELL, BRASS, MALE IRON PIPE THREAD BY FEMALE IRON PIPE THREAD.

(F) 2" NIPPLE, BRASS, M.I.P.T. x M.I.P.T., 6" LONG OR AS REQUIRED TO MEET PROPER GRADE.

(G) 2" BRASS AND COPPER METER SETTER WITH HIGH BYPASS:
- -FLANGED BALL METER VALVE ON INLET
- -FLANGED KEY METER VALVE ON OUTLET
- -BALL VALVE ON BYPASS
- -PADLOCK WINGS ON ALL VALVES
- -VERTICAL INLET AND OUTLET, F.I.P.T.
- -BUSHING INCLUDED ON OUTLET

FORD VBV87-6 WITH HIGH BYPASS, OR EQUAL.

(H) RIGID METER SPREADER, SUPPLIED BY CITY OF BELLEVUE, TO BE INSTALLED IN METER SETTER BY CONTRACTOR.

(I) METER BOX, EQUAL TO:
FOGTITE NO. 2 IN NONTRAVELED AREAS.
OLYMPIC FOUNDRY SM30 IN SIDEWALK AND AREAS WITH VEHICULAR TRAFFIC.

NOTES:

1. SERVICE LINE SHALL BE PERPENDICULAR TO THE WATERMAIN, UNLESS OTHERWISE APPROVED BY THE ENGINEER.
2. BYPASS WILL BE LOCKED OFF BY CONSTRUCTION INSPECTOR WHEN METER SPREADER IS INSTALLED.
3. METER WILL BE SUPPLIED AND INSTALLED BY THE CITY OF BELLEVUE.
4. 2" COMPRESSION CONNECTION BY FEMALE IRON PIPE ELL COUPLING (MUELLER H15-533.20, OR EQUAL) MAY BE SUBSTITUTED FOR STREET ELL/COUPLING COMBINATION (C) AND (E).

JULY, 1998 NO SCALE

City of Bellevue WATER UTILITIES

TITLE

2" DOMESTIC WATER SERVICE

NO. W-29

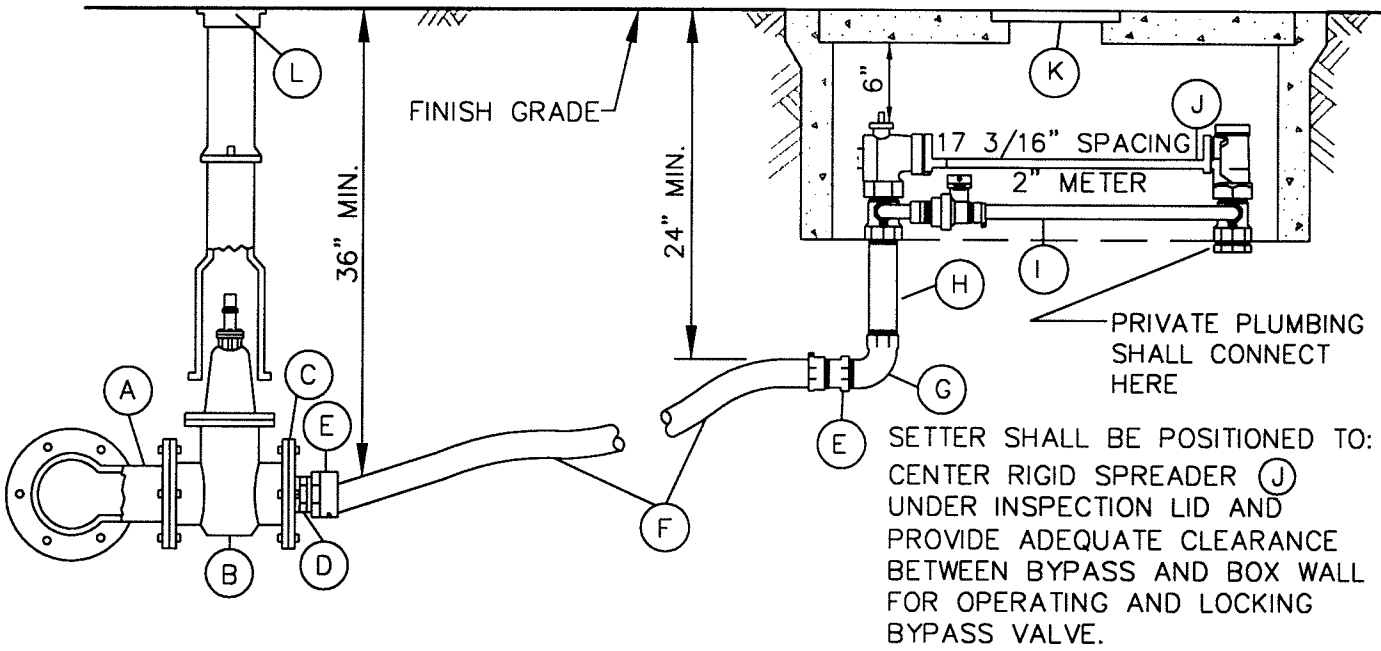

(A) CAST IRON TEE WITH 4"BRANCH, MJxFL (ON NEW MAINS), TAPPING TEE WITH 4" BRANCH, FL (ON EXISTING MAINS).

(B) 4" GATE VALVE, FL.

(C) 4" REDUCING COMPANION FLANGE WITH 2" TAP.

(D) 2" NIPPLE, BRASS, M.I.P.T. x M.I.P.T.

(E) COUPLING, 2" FEMALE IRON PIPE THREAD BY 2" PACK JOINT (COMPRESSION FITTING) FOR COPPER, FORD C14-77, MUELLER NO. H-15451, OR EQUAL.

(F) 2" COPPER TUBING, TYPE K.

(G) 2" STREET ELL, BRASS, MALE IRON PIPE THREAD BY FEMALE IRON PIPE THREAD.

(H) 2" NIPPLE, BRASS, M.I.P.T. x M.I.P.T., 6" LONG OR AS REQUIRED TO MEET PROPER GRADE.

(I) 2" BRASS AND COPPER METER SETTER WITH HIGH BYPASS:
- -FLANGED BALL METER VALVE ON INLET
- -FLANGED KEY METER VALVE ON OUTLET
- -BALL VALVE ON BYPASS
- -PADLOCK WINGS ON ALL VALVES
- -VERTICAL INLET AND OUTLET, F.I.P.T.
- -BUSHING INCLUDED ON OUTLET

FORD VBV87-6 WITH HIGH BYPASS, OR EQUAL.

(J) RIGID METER SPREADER, SUPPLIED BY CITY OF BELLEVUE, TO BE INSTALLED IN METER SETTER BY CONTRACTOR.

(K) METER BOX, EQUAL TO:
FOGTITE NO. 2 IN NONTRAVELED AREAS.
OLYMPIC FOUNDRY SM30 IN SIDEWALK AND AREAS WITH VEHICULAR TRAFFIC.

(L) TWO PIECE CAST IRON VALVE BOX TO FIT, EQUAL TO RICH SEATTLE TYPE #045 - WITH RECESSED HANDLE LID.

NOTES:

1. SERVICE LINE SHALL BE PERPENDICULAR TO THE WATERMAIN, UNLESS OTHERWISE APPROVED BY THE ENGINEER.
2. BYPASS WILL BE LOCKED OFF BY CONSTRUCTION INSPECTOR WHEN METER SPREADER IS INSTALLED.
3. METER WILL BE SUPPLIED AND INSTALLED BY THE CITY OF BELLEVUE.
4. 2" COMPRESSION CONNECTION BY FEMALE IRON PIPE ELL COUPLING (MUELLER H15-533.20, OR EQUAL) MAY BE SUBSTITUTED FOR STREET ELL/COUPLING COMBINATION (E) AND (G).

JULY, 1998 NO SCALE

City of Bellevue WATER UTILITIES

TITLE

2" DOMESTIC WATER SERVICE
(C.B.D. & OTHER SENSITIVE AREAS)

NO. W-30

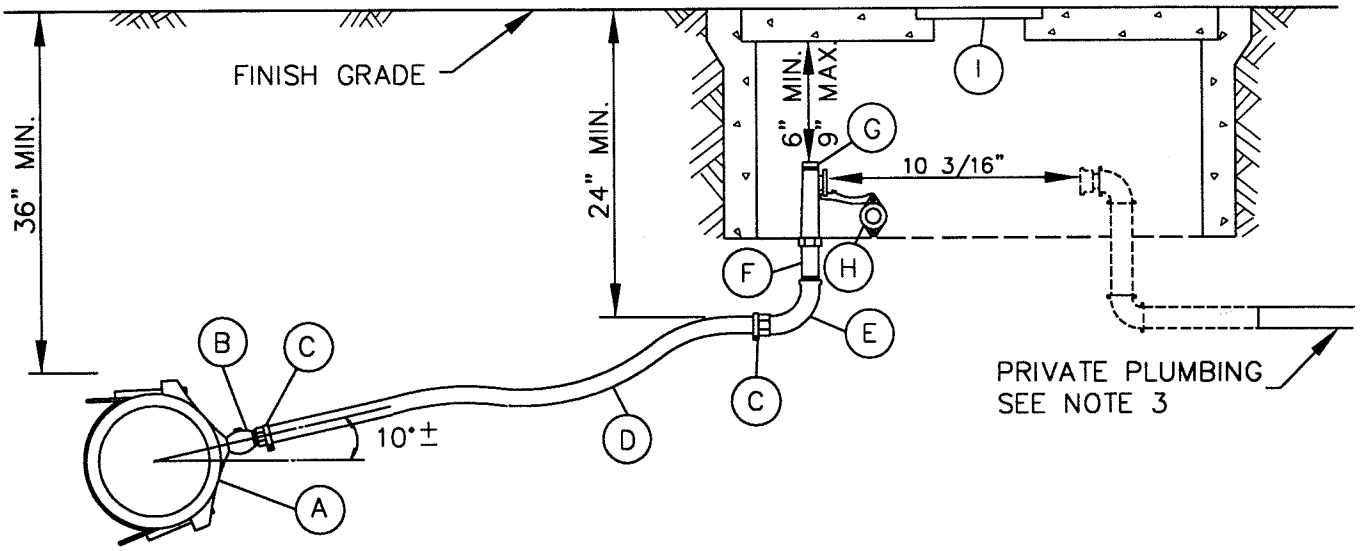

(A) PAINTED HIGH TENSILE D.I. SERVICE SADDLE W/ DOUBLE STAINLESS STEEL STRAP, 2" AWWA TAPER (CC) TAP, ROMAC 202S, OR EQUAL, SIZE AS REQUIRED.

(B) CORPORATION STOP, 2" AWWA TAPER (CC) INLET BY 2" MALE IRON PIPE THREAD OUTLET WITH BALL VALVE (OR EQUAL LOW-FRICTION VALVE), FORD BALLCORP FB400, MUELLER ORISEAL NO. H-9968, OR EQUAL.

(C) COUPLING, 2" FEMALE IRON PIPE THREAD BY 2" PACK JOINT (COMPRESSION FITTING) FOR COPPER, FORD C14-77, MUELLER NO. H-15451, OR EQUAL.

(D) 2" COPPER TUBING, TYPE K.

(E) 2" STREET ELL, BRASS, MALE IRON PIPE THREAD BY FEMALE IRON PIPE THREAD.

(F) 2" NIPPLE, BRASS, M.I.P.T. x M.I.P.T., LENGTH AS REQUIRED TO MEET PROPER GRADE.

(G) 2" ANGLE METER VALVE WITH PADLOCK WINGS, FEMALE IRON PIPE BY FLANGED END FOR METER, FORD FV13-777W, MUELLER NO. H-14286, OR EQUAL.

(H) 2" COMPANION FLANGE, FORD NO. 7F FLANGE, OR EQUAL. TO BE WIRED OR SECURED TO ANGLE VALVE.

(I) METER BOX, EQUAL TO:
FOGTITE NO. 2 IN NONTRAVELED AREAS.
OLYMPIC FOUNDRY SM30 IN SIDEWALK AND AREAS WITH VEHICULAR TRAFFIC.

NOTES:

1. SERVICE LINE SHALL BE PERPENDICULAR TO THE WATERMAIN, UNLESS OTHERWISE APPROVED BY THE ENGINEER.
2. APPROVED BACKFLOW PREVENTION DEVICE MUST BE INSTALLED PER D.O.H. REQUIREMENTS. IRRIGATION OR FIRE SPRINKLER SYSTEM SHALL NOT BE PUT INTO SERVICE UNTIL THE BACKFLOW PREVENTION DEVICE IS APPROVED BY THE CITY OF BELLEVUE WATER QUALITY TECHNICIAN.
3. CUSTOMER'S SIDE OF SERVICE SHALL NOT BE PLUMBED INSIDE THE METER BOX UNTIL THE METER IS SET.
4. METER WILL BE SUPPLIED AND INSTALLED BY THE CITY OF BELLEVUE.

City of Bellevue

WATER UTILITIES

TITLE

2" IRRIGATION OR FIRE SPRINKLER WATER SERVICE

JULY, 1998

NO SCALE

NO. W-31

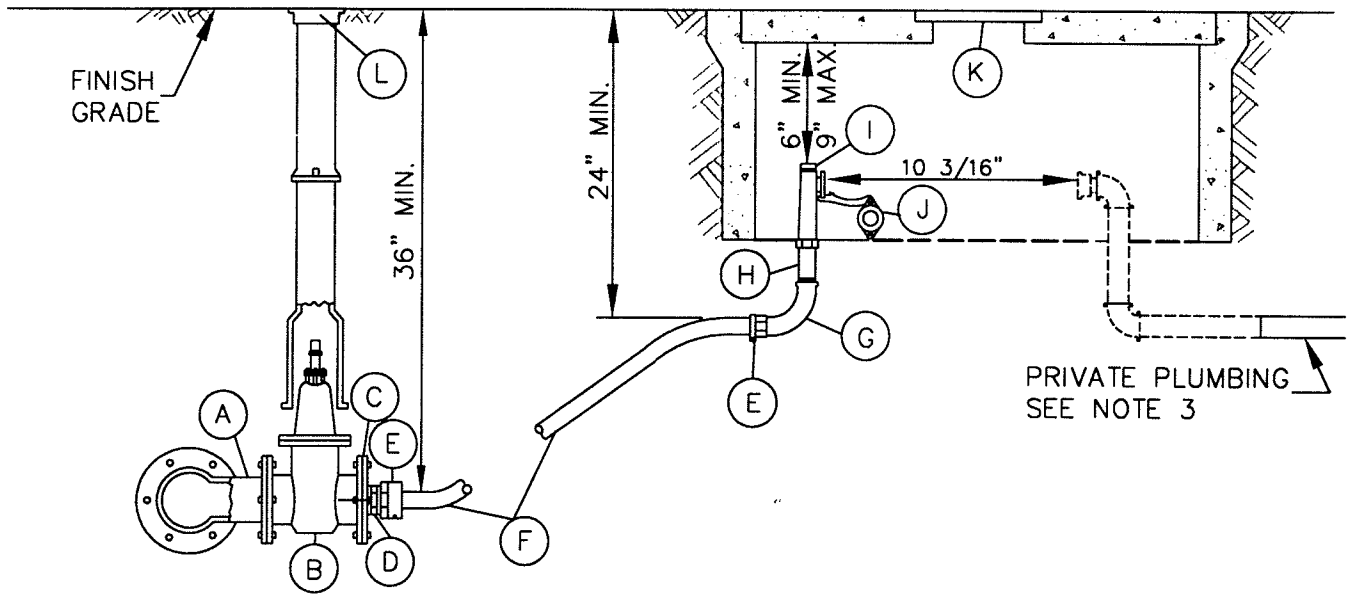

(A) CAST IRON TEE WITH 4" BRANCH, M.J. x FL. (ON NEW MAINS), TAPPING TEE WITH 4" BRANCH, FL. (ON EXISTING MAINS).

(B) 4" GATE VALVE, FL.

(C) 4" REDUCING COMPANION FLANGE WITH 2" TAP.

(D) 2" NIPPLE, BRASS, M.I.P.T. x M.I.P.T.

(E) COUPLING, 2" FEMALE IRON PIPE THREAD BY 2" PACK JOINT (COMPRESSION FITTING) FOR COPPER, FORD C14-77, MUELLER NO. H-15451, OR EQUAL.

(F) 2" COPPER TUBING, TYPE K.

(G) 2" STREET ELL, BRASS, MALE IRON PIPE THREAD BY FEMALE IRON PIPE THREAD.

(H) 2" NIPPLE, BRASS, M.I.P.T. x M.I.P.T., 6" LENGTH AS REQUIRED TO MEET PROPER GRADE.

(I) 2" ANGLE METER VALVE WITH PADLOCK WINGS, FEMALE IRON PIPE BY FLANGE END FOR METER, FORD FV13-777W, MUELLER NO. H-14286, OR EQUAL.

(J) 2" COMPANION FLANGE, FORD NO. 7F FLANGE, OR EQUAL. TO BE WIRED OR SECURED TO ANGLE VALVE.

(K) METER BOX, EQUAL TO:
FOGTITE NO. 2 IN NONTRAVELED AREAS.
OLYMPIC FOUNDRY SM30 IN SIDEWALK AND AREAS WITH VEHICULAR TRAFFIC.

(L) TWO PIECE CAST IRON VALVE BOX TO FIT, EQUAL TO RICH SEATTLE TYPE #045 - WITH RECESSED HANDLE LID.

NOTES:

1. SERVICE LINE SHALL BE PERPENDICULAR TO THE WATERMAIN, UNLESS OTHERWISE APPROVED BY THE ENGINEER.
2. APPROVED BACKFLOW PREVENTION DEVICE MUST BE INSTALLED PER D.O.H. REQUIREMENTS. IRRIGATION OR FIRE SPRINKLER SYSTEM SHALL NOT BE PUT INTO SERVICE UNTIL THE BACKFLOW PREVENTION DEVICE IS APPROVED BY THE CITY OF BELLEVUE WATER QUALITY TECHNICIAN.
3. CUSTOMER'S SIDE OF SERVICE SHALL NOT BE PLUMBED INSIDE THE METER BOX UNTIL THE METER IS SET.
4. METER WILL BE SUPPLIED AND INSTALLED BY THE CITY OF BELLEVUE.

City of Bellevue

WATER UTILITIES

TITLE

2" IRRIGATION OR FIRE SPRINKLER WATER SERVICE (C.B.D. & OTHER SENSITIVE AREAS)

NO. W-32

JULY, 1998

NO SCALE

MATERIAL LIST – (ALL SIZES ARE SAME AS METER UNLESS OTHERWISE LISTED)

1. 1–FLEX CPLG. TO FIT, EQUAL TO SMITH–BLAIR 441
2. 1–4"x3" REDUCER, P.E.xM.J. (FOR 3" SERVICE ONLY)
3. 1–TEE, M.J. x FL. *
4. 1–GATE VALVE, F.L.x M.J. (W/VALVE BOX & COVER) *
5. 3–D.I. PIPE, P.E., LENGTH AS REQUIRED *
6. 2–90° BEND, M.J. *
7. 2–D.I. PIPE, P.E.xFL., LENGTH AS REQUIRED.
8. 1–SERVICE SADDLE, ROMAC 202S (101S FOR 3" SERVICE) OR EQUAL
   1–CORPORATION STOP, AWWA TAPER(CC) x M.I.P.T. FORD FB400 OR EQUAL (SEE TABLE FOR SIZE).
9. 3–GATE VALVE, FL.
10. 1–SENSUS STRAINER (SM–951–R1).
11. 1–SENSUS SRH COMPOUND METER, W/ELECTRONIC REGISTER. (SENSUS TR/PL MODEL W/4 WHEEL HIGH RESOLUTION (100 CUBIC FEET) REGISTER.)
12. 1–D.I. ADAPTER FL. x P.E., LENGTH TO FIT.
13. 2–FL.xCPLG. ADAPTER, EQUAL TO SMITH–BLAIR 912.
14. WELDED FL. RESTRAINT OR MEGA–LUG WALL RING.
15. PRECAST CONC. VAULT BY UTILITY VAULT CO. (SEE TABLE FOR MODEL NO.) W/TWO DIAMOND PLATE DOORS RATED FOR H–20 LOADING.
16. 1–2" BRASS NIPPLE, M.I.P.T.xM.I.P.T., 6" LONG, CONNECT TO TEST PORT OF COMPOUND METER.
17. 1–2" BALL VALVE, F.I.P.T.xM.I.P.T., FORD B81–777.
18. TR/PL SENSOR (TO MOUNT IN VAULT ACCESS DOOR.)
19. 2–ADJUSTABLE STANCHION BOLTED TO FLOOR.
20. 1–GALVANIZED STEEL LADDER TO BE ATTACHED TO VAULT.
21. 1– TEE, FL.

METER SIZE	MAIN–LINE	BYPASS	CORP STOP FOR FLUSH PORT–SIZE	MIN. CLEARANCES				VAULT MODEL	VAULT COVER (W/SPECIAL OFFSET)
				A	B	C	D		
3"	3"D.I.*	3" D.I. *	1"	10"	6"	2'–8"	6"	577–LA	57TL–2–332P
4"	4"D.I.	4" D.I.	2"	12"	6"	2'–8"	6"	676–WA	676–TW–2–332P
6"	6"D.I.	6" D.I.	2"	12"	6"	3'–2"	6"	4484–LA	4484–TL2–332P

* PIPE, FITTINGS, VALVES OUTSIDE VAULT SHALL BE 4" FOR 3" SERVICE INSTALLATION.

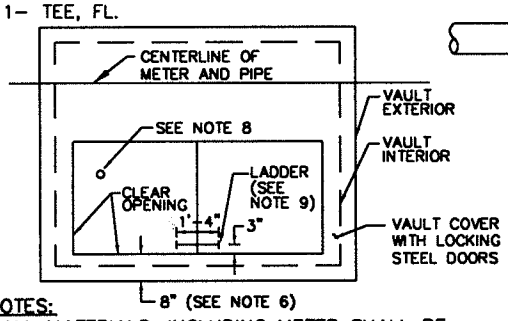

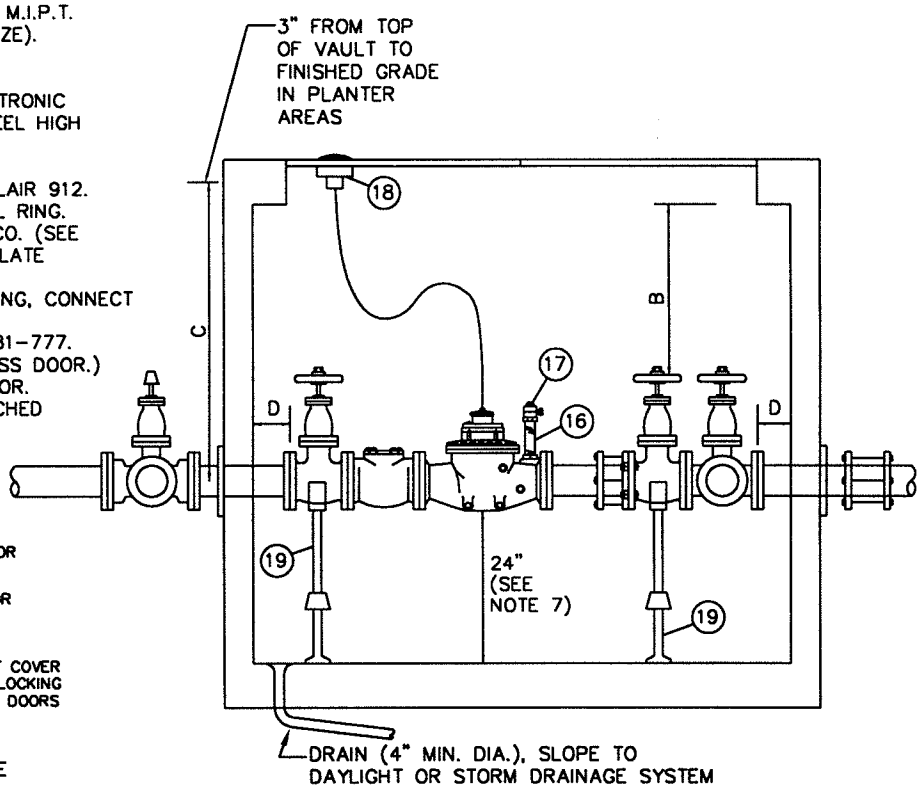

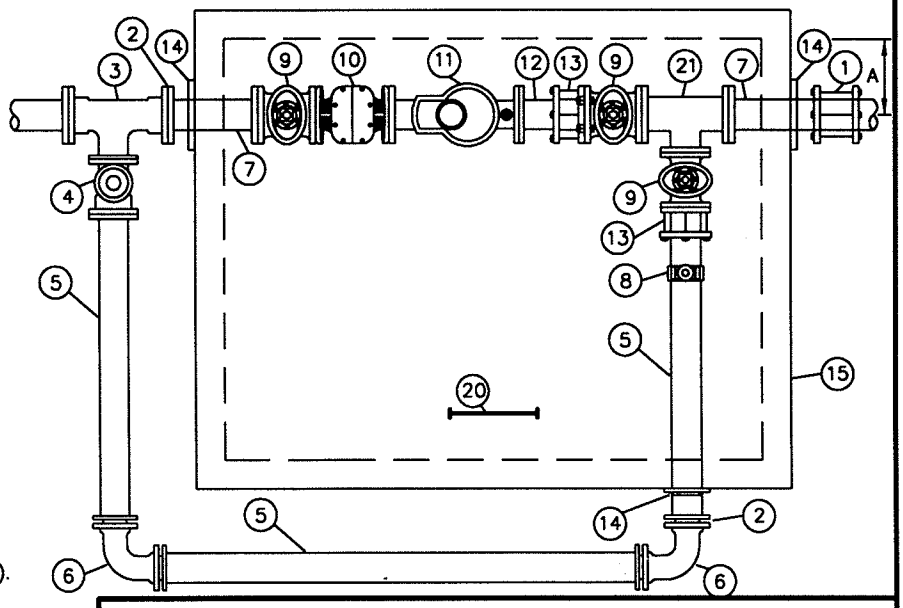

NOTES:

1. ALL MATERIALS, INCLUDING METER SHALL BE FURNISHED BY CONTRACTOR.
2. ALL PIPE & FITTINGS 3" & LARGER SHALL BE CEMENT LINED DUCTILE IRON, CLASS 52 MINIMUM.
3. TEE WITH GATE VALVE REQUIRED AT DISTRIBUTION MAIN.
4. VAULTS SHALL NOT BE INSTALLED IN AREAS W/VEHICULAR TRAFFIC.
5. IN CENTRAL BUSINESS DISTRICT, 3" THROUGH 6" METERS SHALL CONNECT TO WATER MAIN W/8" PIPE (SUBSTITUTE 8"xSERVICE SIZE * REDUCER, M.J.xP.E., AT UPSTREAM SIDE OF ITEM (3)).
6. VAULT COVER SHALL INCLUDE 2 LOCKING STEEL DOORS (GALVANIZED DIAMOND PLATE). DOORS SHALL BE CAST IN COVER WITH 8" SPECIAL OFFSET FROM VAULT WALL, AS SHOWN.
7. PROVIDE 24" CLEARANCE BETWEEN VAULT FLOOR & BOTTOM OF COMPOUND METER. WHERE ELEVATION OF VAULT FLOOR IS TOO LOW TO DRAIN TO DAYLIGHT OR STORM SYSTEM, THIS CLEARANCE CAN BE REDUCED TO A MINIMUM OF 12", IF SUBSTITUTION OF A SHORTER VAULT ALLOWS FLOOR TO DRAIN TO DAYLIGHT OR STORM SYSTEM (APPROVED BY THE UTILITY ON A CASE BY CASE BASIS ONLY). SUBSTITUTE VAULTS ARE AS FOLLOWS:
   3" 575–LA WITH 57TL–2–332P COVER (WITH SPECIAL OFFSET)
   4" 675–WA WITH 675–TW–2–332P COVER (WITH SPECIAL OFFSET)
8. PROVIDE 2 1/4" DIAM. OPENING IN STEEL DOOR FOR TR/PL SENSOR.
9. LADDER TO BE BOLTED TO VAULT FLOOR AND TO VAULT WALL AT TWO LOCATIONS. RUNGS SHALL BE SPACED AT 12" ON CENTER.
10. ALL FITTINGS OUTSIDE VAULT SHALL INCLUDE THRUST BLOCKING OR JOINT RESTRAINT DEVICES.

JULY, 1998 NO SCALE

City of Bellevue WATER UTILITIES

TITLE

3" TO 6" DOMESTIC METER INSTALLATION

NO. W-33

MATERIAL LIST – (ALL SIZES ARE SAME AS METER UNLESS OTHERWISE LISTED)

1. 1–FLEX CPLG. TO FIT, EQUAL TO SMITH–BLAIR 441
2. 1–TEE, M.J. x FL.
3. 1–GATE VALVE, F.L.x M.J. (W/VALVE BOX & COVER)
4. 3–D.I. PIPE, P.E., LENGTH AS REQUIRED
5. 2–90° BEND, M.J.
6. 2–D.I. PIPE, P.E.xFL., LENGTH AS REQUIRED.
7. 1–SERVICE SADDLE, ROMAC 202S OR EQUAL. 1–CORPORATION STOP, AWWA TAPER(CC) x M.I.P.T. FORD FB400 OR EQUAL (SEE TABLE FOR SIZE).
8. 3–GATE VALVE, FL.
9. 1–SENSUS FIRELINE FIRE SERVICE WATER METER ASSEMBLY, "STANDARD LENGTH " WITH ELECTRONIC REGISTER. (SENSUS TR/PL MODEL WITH 4 WHEEL HIGH RESOLUTION (100 CUBIC FEET) REGISTER.)
10. 1–D.I. ADAPTER FL. x P.E., (LENGTH TO FIT)
11. 2–FLxCPLG. ADAPTER, EQUAL TO SMITH–BLAIR 912.
12. WELDED FL. RESTRAINT OR MEGA–LUG WALL RING
13. PRECAST CONC. VAULT BY UTLITY VAULT CO. (SEE TABLE FOR MODEL NO.) W/ THREE DIAMOND PLATE DOORS RATED FOR H–20 LOADING.
14. 1–TEE, FL.
15. TR/PL SENSOR (TO MOUNT IN VAULT ACCESS DOOR.)
16. 3–ADJUSTABLE STANCHION BOLTED TO FLOOR.
17. 1–GALVANIZED STEEL LADDER (1'–4"WIDE) TO BE BOLTED TO VAULT FLOOR AND TO VAULT WALL AT TWO LOCATIONS. RUNGS SHALL BE SPACED AT 12" ON CENTER.

METER SIZE	MAIN–LINE	BYPASS	CORP STOP FOR FLUSH PORT–SIZE	MIN. CLEARANCES				VAULT MODEL	VAULT COVER (W/SPECIAL OFFSET)
				A	B	C	D		
8"	8"D.I.	8" D.I.	2"	21"	6"	5'–0"	6"	712–LA	712TL–3–332P

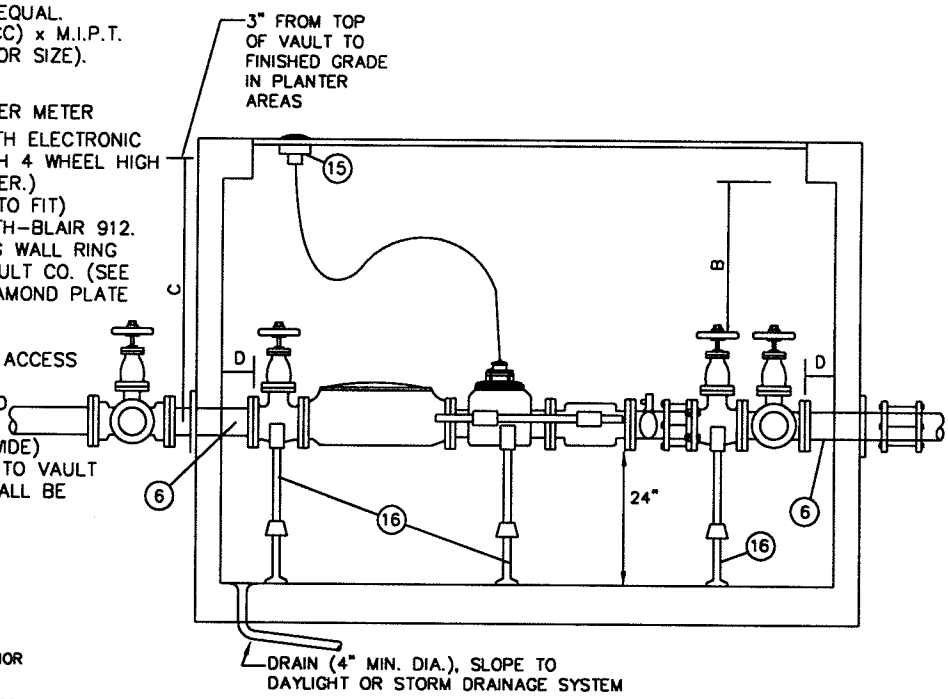

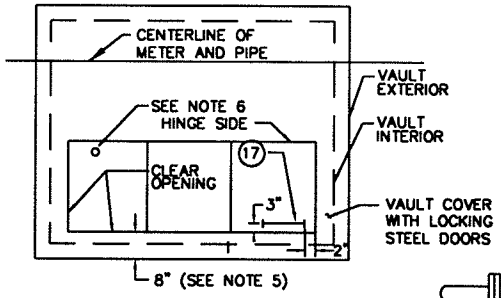

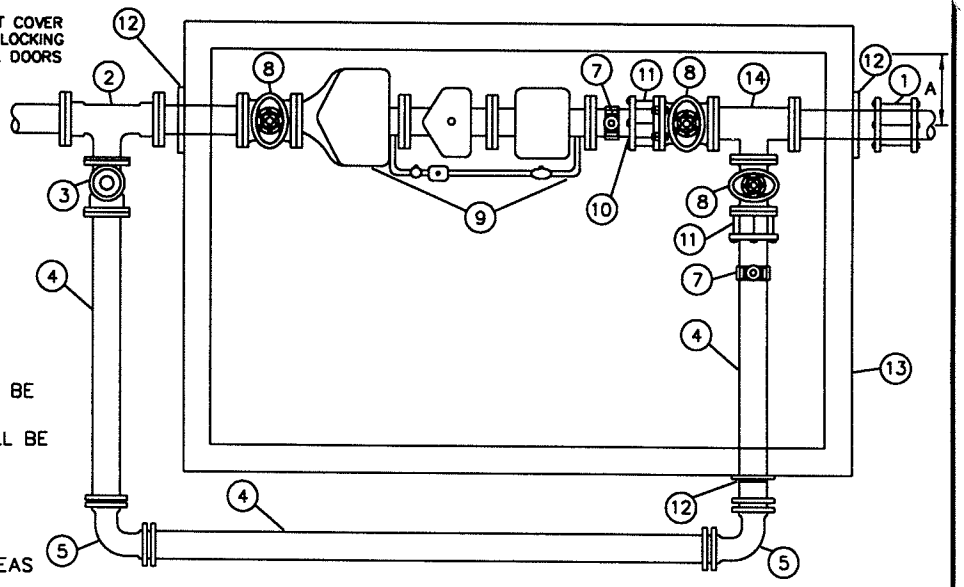

NOTES:

1. ALL MATERIALS, INCLUDING METER SHALL BE FURNISHED BY CONTRACTOR.
2. ALL PIPE & FITTINGS 3" & LARGER SHALL BE CEMENT LINED DUCTILE IRON, CLASS 52 MINIMUM.
3. TEE WITH GATE VALVE REQUIRED AT DISTRIBUTION MAIN.
4. VAULTS SHALL NOT BE INSTALLED IN AREAS W/VEHICULAR TRAFFIC.
5. VAULT COVER SHALL INCLUDE 3 LOCKING STEEL DOORS (GALVANIZED DIAMOND PLATE). DOORS SHALL BE CAST IN COVER WITH 8" SPECIAL OFFSET FROM VAULT WALL, AS SHOWN.
6. PROVIDE 2 1/4" DIAM. OPENING IN STEEL DOOR FOR TR/PL SENSOR.
7. ALL FITTINGS OUTSIDE VAULT SHALL INCLUDE THRUST BLOCKING OR JOINT RESTRAINT DEVICES.

City of Bellevue

WATER UTILITIES

TITLE

8" DOMESTIC METER INSTALLATION

JULY, 1998

NO SCALE

NO. W–34

MATERIAL LIST- (ALL SIZES ARE SAME AS METER UNLESS OTHERWISE LISTED)

1. 2-FLEX. CPLG. TO FIT, EQUAL TO SMITH-BLAIR 441 (4"x3" REDUCER, M.J. FOR 3" METER INSTALLATION ON UPSTREAM SIDE OF VAULT).
2. 2-GATE VALVE, FLANGE.
3. 1- SENSUS TURBO METER WITH ELECTRONIC REGISTER (SENSUS TR/PL MODEL WITH 4 WHEEL HIGH RESOLUTION (100 CUBIC FEET) REGISTER.
   3" SIZE-MODEL W-350 DRS.
   4" SIZE-MODEL W-1000 DRS.
   6" SIZE-MODEL W-2000 DR (INCLUDES AWWA STRAINER TO BE INSTALLED ON UPSTREAM END OF METER).
4. 1-D.I. ADPT. FL.xPE. LENGTH TO FIT.
5. 1-CPLG. ADPT., FL. EQUAL TO SMITH-BLAIR 912.
6. PRECAST CONC. VAULT BY UTILITY VAULT CO. (SEE TABLE FOR MODEL NO.) WITH TWO DIAMOND PLATE DOORS RATED FOR H-20 LOADING,
7. WELDED FL. RESTRAINT OR MEGALUG WALL RING.
8. FOR 6" METER:
   1-SERVICE SADDLE, ROMAC 202S OR EQUAL.
   1-CORP. STOP, AWWA TAPPER (CC) x M.I.P.T., FORD FB400 OR EQUAL (SEE TABLE FOR SIZE).
   FOR 3" OR 4" METER:
   OMIT SADDLE AND CORP. STOP, CONNECT THE FOLLOWING TO METER TEST PORT.
   1-2" BRASS NIPPLE, M.I.P.T.X M.I.P.T., 6" LONG
   1-2" BALL VALVE, F.I.P.T. X M.I.P.T. FORD B81-777
9. 1-GALVANIZED STEEL LADDER TO BE ATTACHED TO VAULT.
10. TR/PL SENSOR (TO MOUNT IN VAULT ACCESS DOOR).

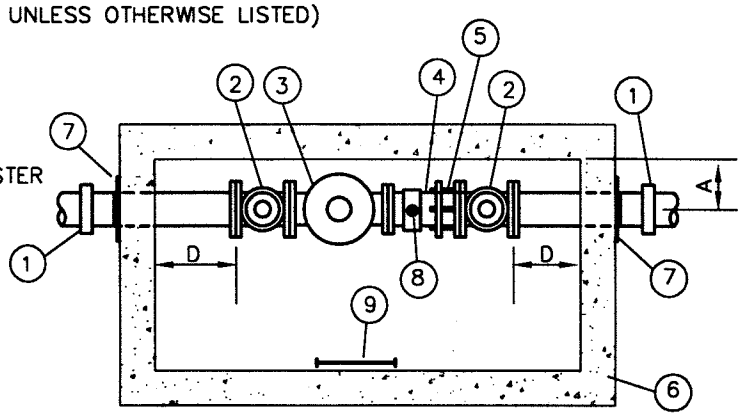

8. PROVIDE 24" CLEARANCE BETWEEN VAULT FLOOR & BOTTOM OF METER, WHERE ELEVATION OF VAULT FLOOR IS TOO LOW TO DRAIN TO DAYLIGHT OR STORM SYSTEM. THIS CLEARANCE CAN BE REDUCED TO A MINIMUM OF 12", IF SUBSTITUTION OF A SHORTER VAULT ALLOWS FLOOR TO DRAIN TO DAYLIGHT OR STORM SYSTEM (APPROVED BY THE UTILITY ON A CASE BY CASE BASIS ONLY.) SUBSTITUTE VAULT AS FOLLOWS: 575-LA WITH 57TL-2-332P COVER (WITH SPECIAL OFFSET) ALLOWED ONLY ON 3" AND 4" METERS.
9. PROVIDE 2 1/4" DIAM. OPENING IN STEEL DOOR FOR TR/PL SENSOR.
10. LADDER TO BE BOLTED TO VAULT FLOOR AND TO VAULT WALL AT TWO LOCATIONS. RUNGS SHALL BE SPACED AT 12" ON CENTER.
11. A FULL FLOW BYPASS MAY BE REQUIRED, DEPENDING ON APPLICATION. TO BE DETERMINED BY THE CITY.

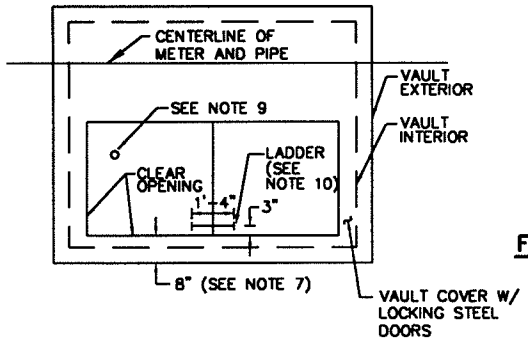

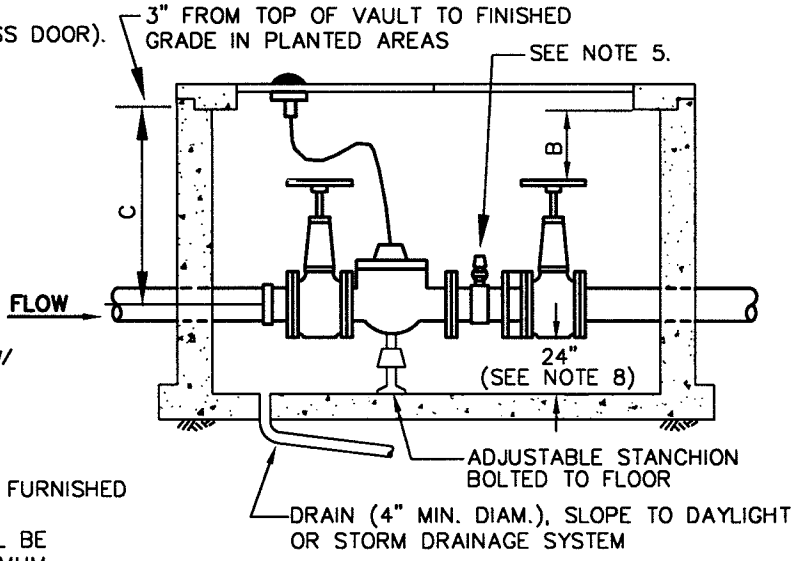

NOTES:

1. ALL MATERIALS INCLUDING METER SHALL BE FURNISHED BY CONTRACTOR.
2. ALL PIPE & FITTINGS 3" AND LARGER SHALL BE CEMENT LINED DUCTILE IRON, CLASS 52 MINIMUM.
3. PIPING FROM MAIN TO VAULT SHALL BE 4" ON 3" METER INSTALLATION. TEE WITH VALVE ON EXISTING MAIN REQUIRED.
4. VAULTS SHALL NOT BE INSTALLED IN AREAS WITH VEHICULAR TRAFFIC.
5. TEST PORT NOZZLE SHALL BE DIRECTED UPWARD UNLESS OTHERWISE DIRECTED, (SEE ITEM 8).
6. IN CENTRAL BUSINESS DISTRICT, CONNECT TO WATER MAIN WITH 8" PIPE. SUBSTITUTE 8" X SERVICE SIZE REDUCER, MJ, FOR ITEM 1 ON UPSTREAM SIDE OF VAULT.
7. VAULT COVER SHALL INCLUDE 2 LOCKING STEEL DOORS (GALVANIZED DIAMOND PLATE). DOORS SHALL BE CAST IN COVER WITH 8" SPECIAL OFFSET FROM VAULT WALL AS SHOWN.

METER SIZE	MAIN-LINE	CORP. STOP FOR METER TESTING SIZE	MINIMUM CLEARANCES				VAULT MODEL	VAULT COVER (W/ SPECIAL OFFSET)
			A	B	C	D		
3"	3"D.I.	2"	10"	6"	2'-8"	9"	577-LA	57TL-2-332P
4"	4"D.I.	2"	12"	6"	2'-8"	9"	577-LA	
6"	6"D.I.	2"	13"	6"	3'-2"	6"	577-LA	

City of Bellevue — WATER UTILITIES

TITLE

3" TO 6" IRRIGATION METER INSTALLATION

JULY, 1998 — NO SCALE — NO. W-35

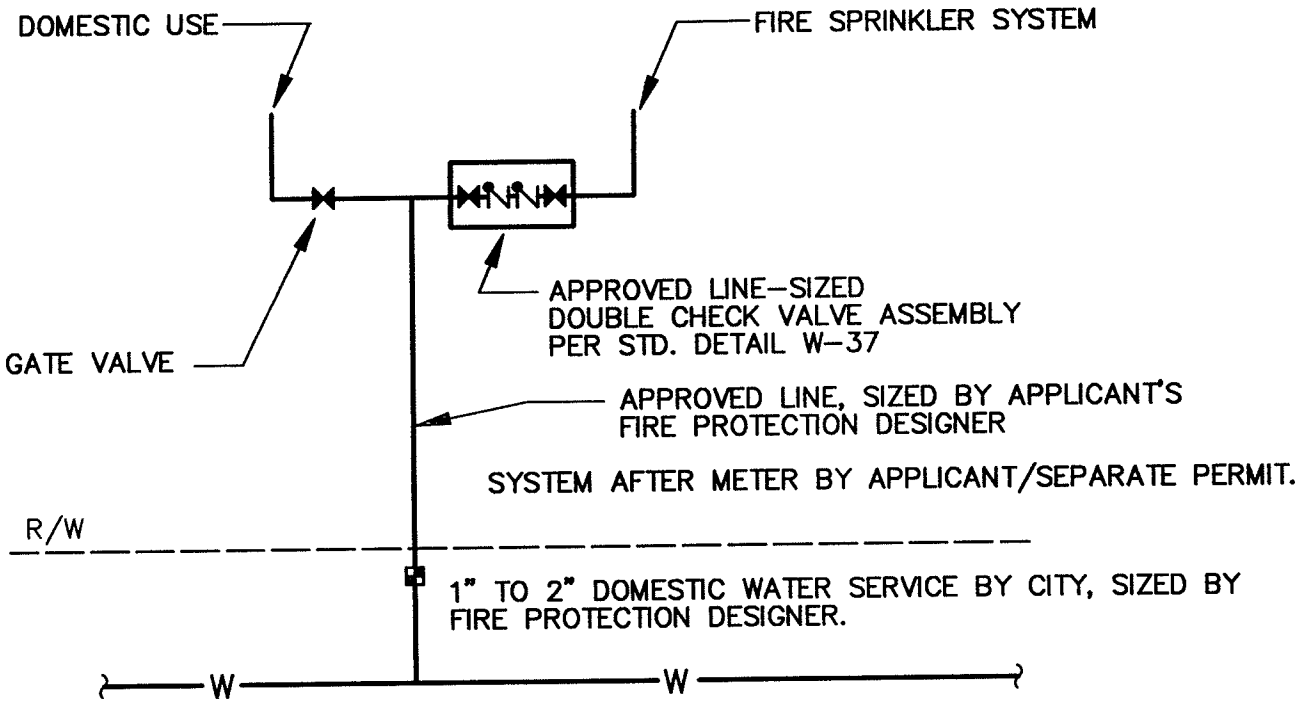

City of Bellevue

WATER UTILITIES

TITLE

OUTSIDE DCVA INSTALLATION
FOR RESIDENTIAL
FIRE SPRINKLER SYSTEMS

NO. W-36

DECEMBER 13, 1995

NO SCALE

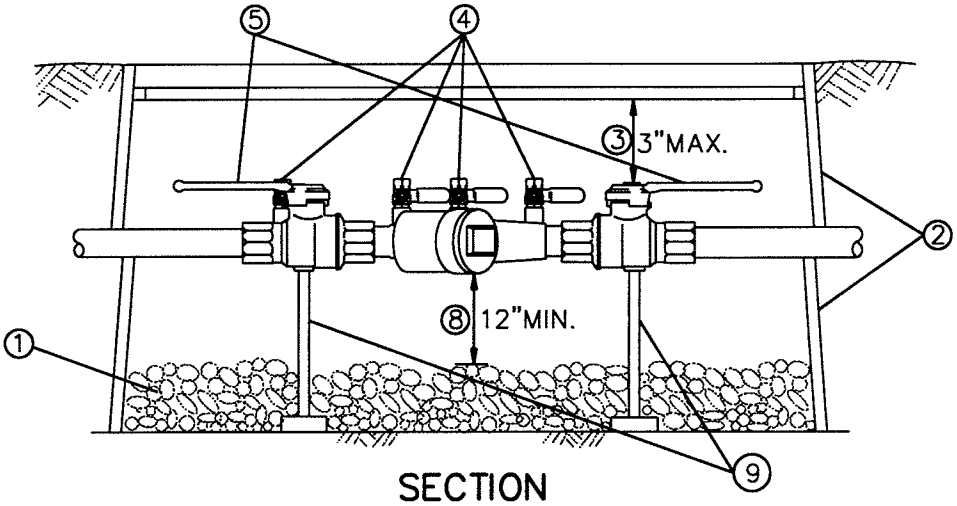

SECTION

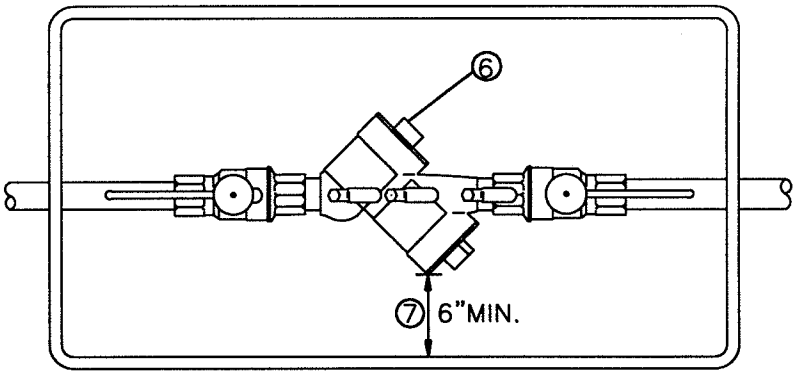

PLAN

① 1" ROUND WASHED GRAVEL BY 6" DEEP ON BOTTOM OF BOX
② ENCLOSE 2" & SMALLER D.C.V.A. IN TWO METER BOXES STACKED ON TOP OF EACH OTHER OR, OVERSIZED BOX. MUST HAVE REMOVABLE COVER. BOXES TO BE LOCATED IN SIDEWALK SHALL BE CONCRETE, SEE WATER METER DETAILS.
③ MAXIMUM OF 3" DISTANCE BETWEEN UNDERSIDE OF LID AND HIGHEST POINT OF DEVICE.
④ MUST INCLUDE (4) RESILIENT SEATED TEST-COCKS WITH PLUGS INSTALLED.
⑤ THE D.C.V.A. MUST INCLUDE (2) RESILIENT SEATED SHUT-OFF VALVES.
⑥ Y-PATTERN D.C.V.A. SHOULD BE INSTALLED ON SIDE.
⑦ WHEN TEST-COCKS ARE FACING SIDEWAYS THERE MUST BE A 6" MIN. CLEARANCE BETWEEN THEM AND SIDE OF BOX.
⑧ MIN. OF 12" BETWEEN LOWEST POINT OF DEVICE AND DRAIN ROCK.
⑨ PROVIDE SUPPORT FOR 2" DEVICES.

NOTES:

1. INSTALL ACCORDING TO MANUFACTURER'S SPECIFICATIONS.
2. ALL INSTALLATIONS MUST MEET MINIMUM STANDARDS OF THE UNIFORM PLUMBING CODE.
3. ASSEMBLY REQUIRES TESTING AND CERTIFICATION PRIOR TO USE, AND ANNUALLY THEREAFTER. FOR INFORMATION CONTACT WATER QUALITY TECHNICIAN AT 462-2030.

City of Bellevue — WATER UTILITIES

TITLE: 3/4" TO 2" DOUBLE CHECK VALVE ASSEMBLY FOR IRRIGATION OR FIRE SPRINKLER SYSTEMS (OUTSIDE INSTALLATION)

FEBRUARY 28, 1996 — NO SCALE — NO. W-37

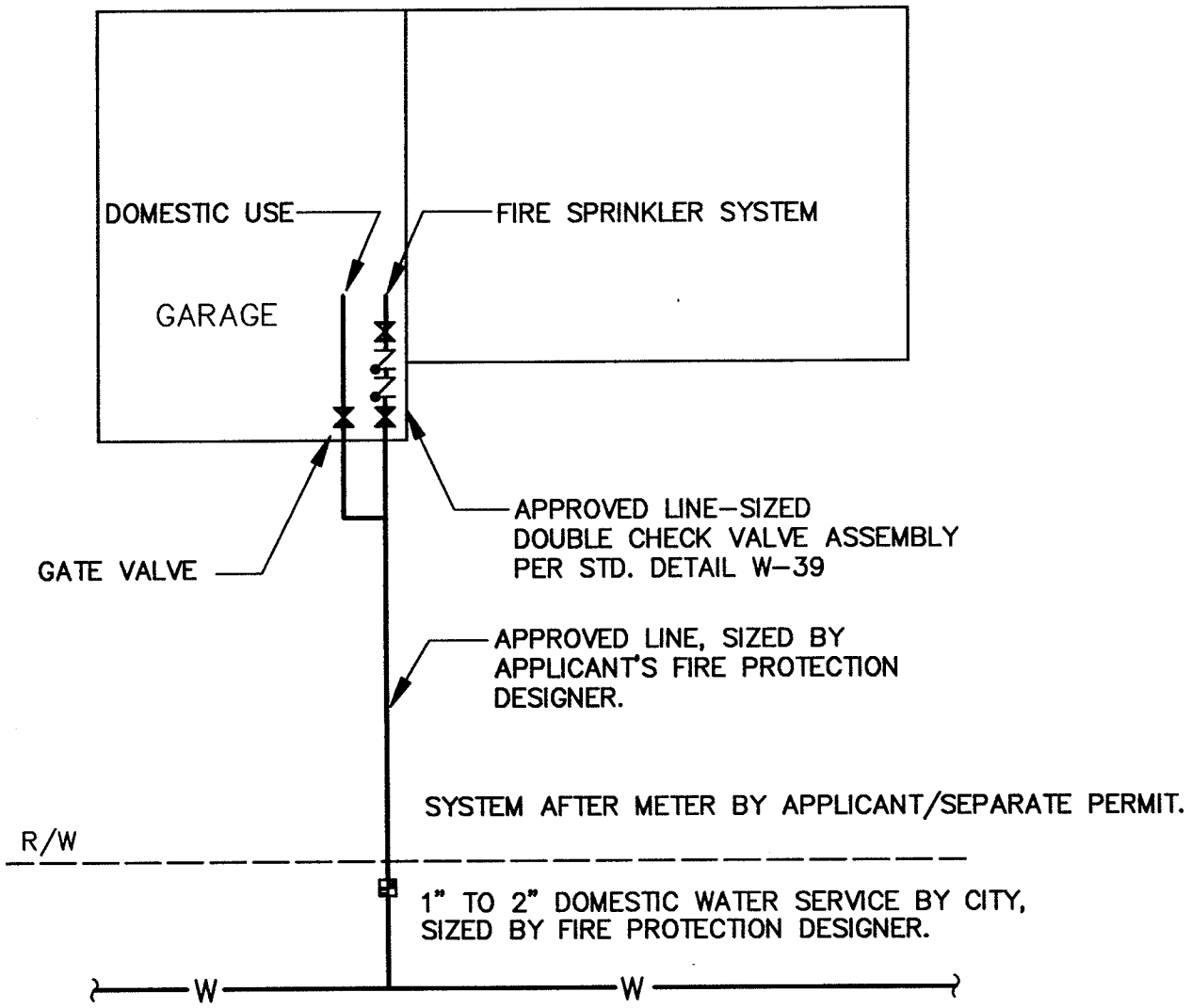

City of Bellevue

WATER UTILITIES

TITLE

INSIDE DCVA INSTALLATION FOR RESIDENTIAL FIRE SPRINKLER SYSTEMS

DECEMBER 13, 1995

NO SCALE

NO. W-38

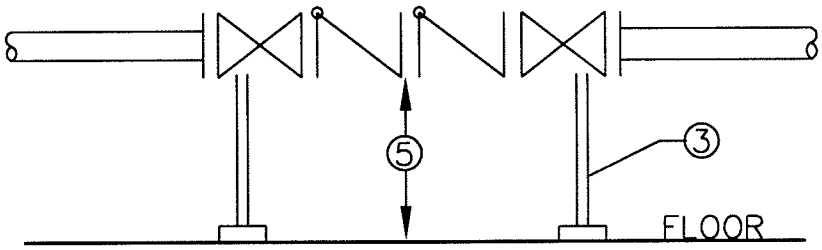

PROFILE

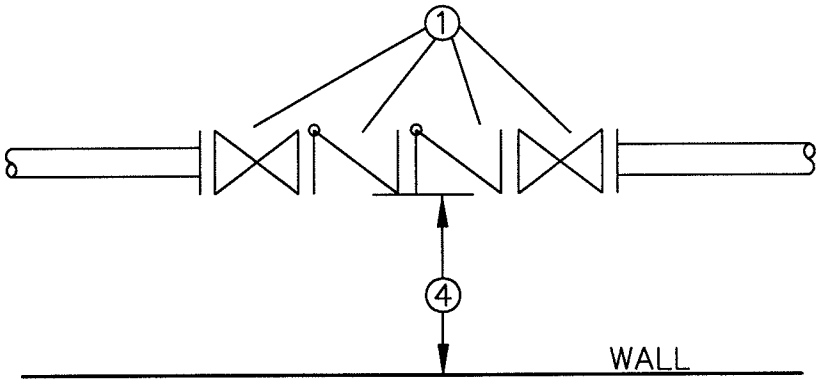

PLAN

① LINE-SIZED WA STATE APPROVED DOUBLE CHECK VALVE ASSEMBLY.
- A. THE D.C.V.A. INCLUDES (2) RESILIENT-SEATED SHUT-OFF VALVES.
- B. THE D.C.V.A. INCLUDES (4) RESILIENT-SEATED TEST-COCKS.

② THE D.C.V.A. MUST BE INSTALLED HORIZONTALLY, NOT VERTICALLY.

③ (2) SUPPORTS (EITHER WALL OR FLOOR) ONE ON EACH SIDE OF DEVICE, MUST FIRMLY ANCHOR DEVICE.

④ MUST PROVIDE A MINIMUM OF 6" SIDE CLEARANCE BETWEEN D.C.V.A. AND WALL OR OBSTRUCTION.

⑤ CLEARANCE BETWEEN FLOOR AND DEVICE MUST BE A MINIMUM OF 12" AND A MAXIMUM OF 5'.

⑥ WATER QUALITY SECTION MUST CERTIFY AND TEST BEFORE USE.

⑦ REQUIRES ANNUAL BACKFLOW TEST BY A CERTIFIED TESTER.

⑧ PROTECT AGAINST FREEZING OR DAMAGE. USE HEAT-TAPE IF AREA IS SUBJECT TO FREEZING.

⑨ INTERIOR WATER APPERTENANCES MUST CONFORM TO UNIFORM PLUMBING CODE REQUIREMENTS.

City of Bellevue

WATER UTILITIES

TITLE

DOUBLE CHECK VALVE ASSEMBLY (INSIDE INSTALLATION)

NO. W-39

JULY, 1998

NO SCALE

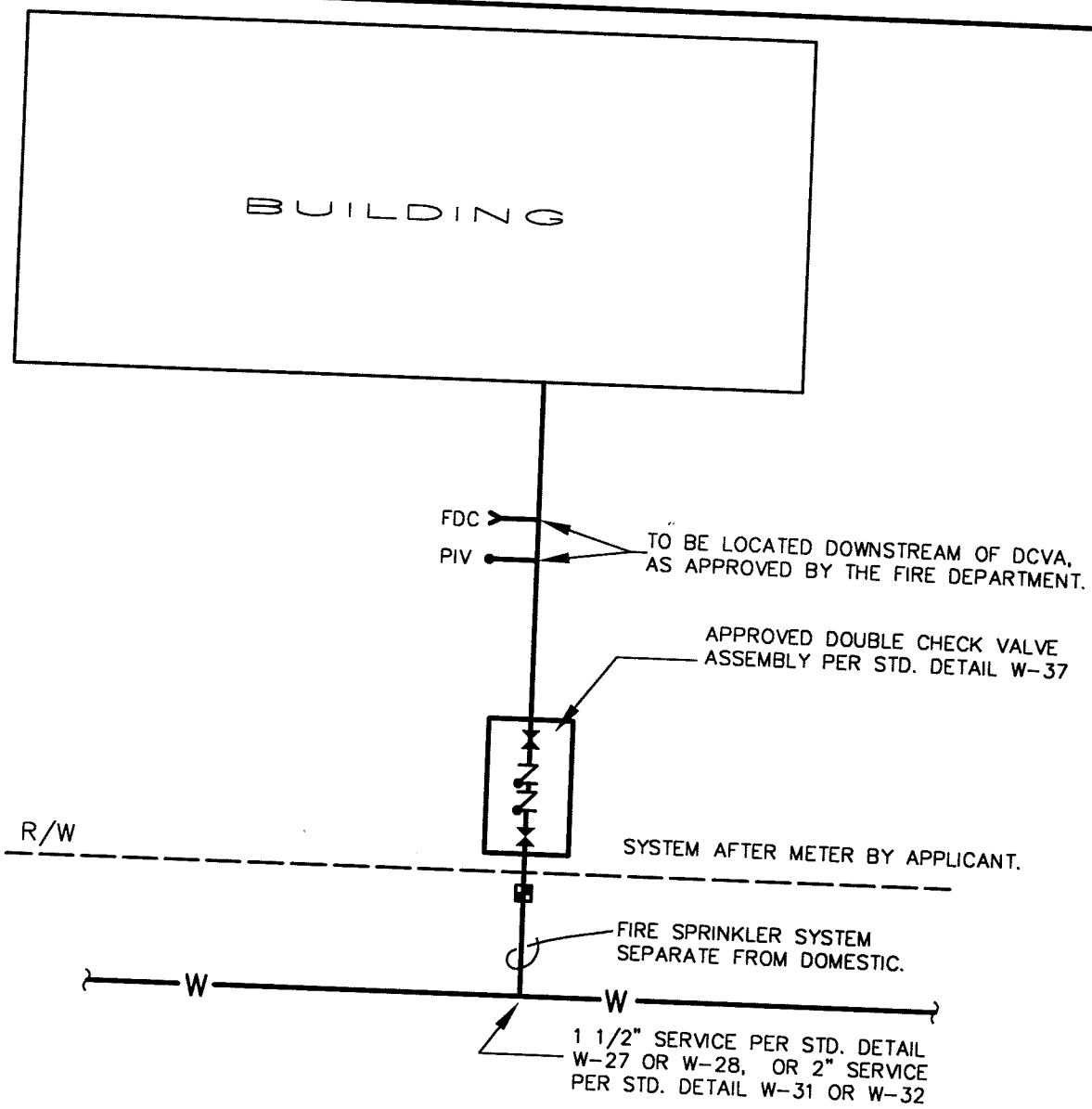

City of Bellevue

WATER UTILITIES

TITLE

OUTSIDE DCVA INSTALLATION FOR 1 1/2" & 2" COMMERCIAL FIRE SPRINKLER SYSTEMS

NO. W-40

JULY, 1998

NO SCALE

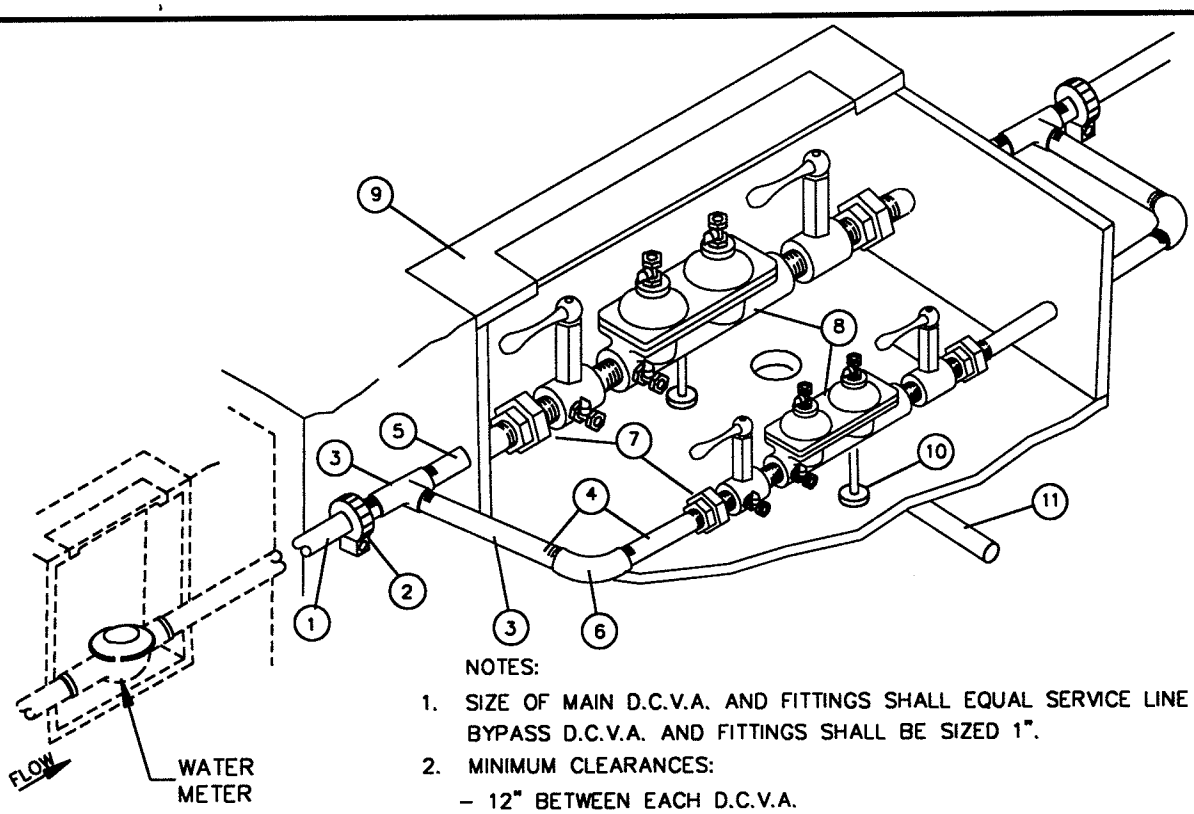

NOTES:

1. SIZE OF MAIN D.C.V.A. AND FITTINGS SHALL EQUAL SERVICE LINE SIZE. BYPASS D.C.V.A. AND FITTINGS SHALL BE SIZED 1".
2. MINIMUM CLEARANCES:
   - 12" BETWEEN EACH D.C.V.A.
   - 12" BETWEEN D.C.V.A. AND SIDE OF VAULT.
   - 12" BETWEEN D.C.V.A. AND VAULT FLOOR.
   - 24" SOIL COVER OVER SERVICE LINE.
3. INSTALL PLUGS IN ALL TEST COCKS.
4. CITY OF BELLEVUE WATER QUALITY DIVISION MUST TEST AND CERTIFY DEVICES BEFORE USE.
5. D.C.V.A.'s SHALL BE CENTERED IN VAULT.
6. WHERE ACCESS OPENING DOES NOT EXPOSE SHUT OFF VALVES, MIN. 18" CLEARANCE SHALL BE REQUIRED BETWEEN TOP OF VALVE AND UNDERSIDE OF VAULT COVER.

(1) COPPER TUBBING, TYPE K. *

(2) COUPLING, MALE IRON PIPE THREAD BY PACK JOINT (COMPRESSION FITTING) FOR COPPER, MUELLER NO. H-15428 OR EQUAL. *

(3) BRASS TEE, MAIN LINE SIZE x 1", FEMALE IRON PIPE THREAD. *

(4) BRASS NIPPLE, LENGTH TO FIT, 1", MALE IRON PIPE THREAD.*

(5) BRASS NIPPLE, MAIN LINE SIZE, LENGTH TO FIT, MALE IRON PIPE THREAD.*

(6) BRASS ELBOW, 1", FEMALE IRON PIPE THREAD. *

(7) BRASS UNION, MALE x FEMALE IRON PIPE THREAD. *

(8) STATE APPROVED INTERNALLY LOADED DOUBLE CHECK VALVE ASSEMBLY, COMPLETE WITH (2) FULL FLOW RESILIENT SEATED SHUT-OFF VALVES AND TEST COCKS.

(9) CONCRETE VAULT WITH AT LEAST ONE (1) 3'x3' DIAMOND PLATE DOOR (H20 LOADING, LOCKING LID) - COVER TO READ "WATER". SIZE VAULT TO PROVIDE MINIMUM CLEARANCES LISTED IN NOTE 2.

(10) ADJUSTABLE PIPE STANCHION, BOLTED TO FLOOR.

(11) DRAIN, SLOPE TO DAYLIGHT WHERE APPLICABLE (DO NOT CONNECT TO SANITARY SEWER).

* TYPICAL, EACH SIDE OF D.C.V.A.

FEBRUARY 28, 1996 NO SCALE

City of Bellevue

WATER UTILITIES

TITLE

1 1/2" AND 2" DOUBLE CHECK VALVE ASSEMBLY FOR CONTINUOUS SUPPLY (OUTSIDE INSTALLATION)

NO. W-41

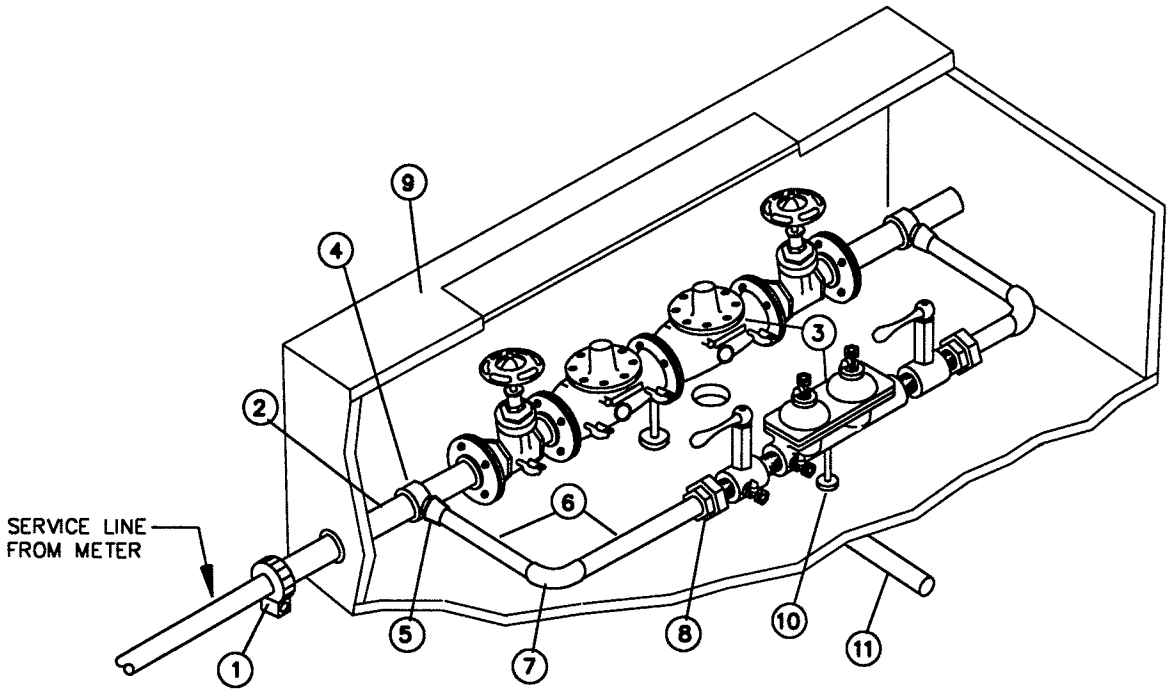

NOTES:

1. SIZE OF MAIN D.C.V.A. AND FITTINGS SHALL EQUAL SERVICE LINE SIZE. BYPASS D.C.V.A. AND FITTINGS SHALL BE SIZED AS SHOWN IN CHART.
2. MINIMUM CLEARANCES:
   - 12" BETWEEN EACH D.C.V.A.
   - 12" BETWEEN D.C.V.A. AND SIDE OF VAULT.
   - 12" BETWEEN D.C.V.A. AND VAULT FLOOR.
   - 24" SOIL COVER OVER SERVICE LINE.
3. INSTALL PLUGS IN ALL TEST COCKS.
4. CITY OF BELLEVUE WATER QUALITY DIVISION MUST TEST AND CERTIFY DEVICES BEFORE USE.
5. D.C.V.A.'s SHALL BE CENTERED IN VAULT.
6. WHERE ACCESS OPENING DOES NOT EXPOSE SHUT OFF VALVES, MIN. 18" CLEARANCE SHALL BE REQUIRED BETWEEN TOP OF VALVE AND UNDERSIDE OF VAULT COVER.

BY PASS SIZE CHART

METER SIZE	MAIN-LINE	BY PASS
3"	3"D.I.	1 1/2"COPPER
4"	4"D.I.	1 1/2"COPPER
6"	6"D.I.	2"COPPER

(1) FLEX COUPLING , ROCKWELL 441 OR EQUAL. *

(2) D.I. PIPE, P.E. X FL., LENGTH TO FIT. *

(3) STATE APPROVED INTERNALLY LOADED DOUBLE CHECK VALVE ASSEMBLY, COMPLETE WITH (2) FULL FLOW RESILIENT SEATED SHUT-OFF VALVES AND TEST COCKS.

(4) DOUBLE STRAP SERVICE SADDLE, ROMAC 202S WITH IPS TAP, OR EQUAL. *

(5) COUPLING, OUTSIDE IRON PIPE THREAD TO COPPER COMPRESSION CONNECTION, MUELLER H-15428, OR EQUAL. *

(6) COPPER TUBING, TYPE K. *

(7) 1/4 BEND COUPLING, COPPER TO COPPER, MUELLER H-15526, OR EQUAL. *

(8) COUPLING, COPPER COMPRESSION CONNECTION BY FEMALE IRON PIPE THREAD, MUELLER H-15451, OR EQUAL. *

(9) CONCRETE VAULT WITH AT LEAST ONE (1) 3'x3' DIAMOND PLATE DOOR (H20 LOADING, LOCKING LID) - COVER TO READ "WATER". SIZE VAULT TO PROVIDE MINIMUM CLEARANCES LISTED IN NOTE 2.

(10) ADJUSTABLE PIPE STANCHION, BOLTED TO FLOOR.

(11) DRAIN, SLOPE TO DAYLIGHT WHERE APPLICABLE (DO NOT CONNECT TO SANITARY SEWER).

* TYPICAL, EACH SIDE OF D.C.V.A.

FEBRUARY 28, 1996 NO SCALE

City of Bellevue WATER UTILITIES

TITLE 3" TO 6" DOMESTIC DOUBLE CHECK VALVE ASSEMBLY FOR CONTINUOUS SUPPLY (OUTSIDE INSTALLATION) NO. W-42

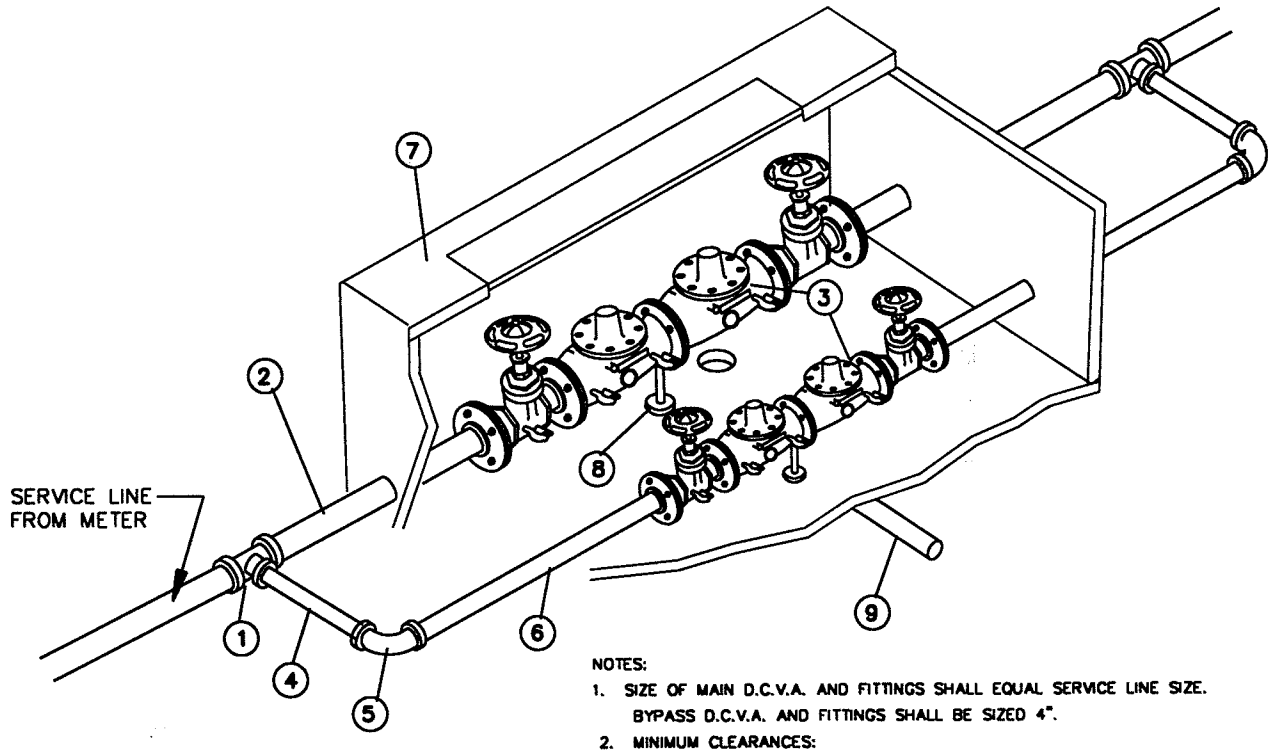

NOTES:

1. SIZE OF MAIN D.C.V.A. AND FITTINGS SHALL EQUAL SERVICE LINE SIZE. BYPASS D.C.V.A. AND FITTINGS SHALL BE SIZED 4".
2. MINIMUM CLEARANCES:
   - 12" BETWEEN EACH D.C.V.A.
   - 12" BETWEEN D.C.V.A. AND SIDE OF VAULT.
   - 12" BETWEEN D.C.V.A. AND VAULT FLOOR.
   - 24" SOIL COVER OVER SERVICE LINE.
3. INSTALL PLUGS IN ALL TEST COCKS.
4. CITY OF BELLEVUE WATER QUALITY DIVISION MUST TEST AND CERTIFY DEVICES BEFORE USE.
5. D.C.V.A.'s SHALL BE CENTERED IN VAULT.
6. WHERE ACCESS OPENING DOES NOT EXPOSE SHUT OFF VALVES MIN. 18" CLEARANCE SHALL BE REQUIRED BETWEEN TOP OF VALVE AND UNDERSIDE OF VAULT COVER.
7. ALL FITTINGS OUTSIDE VAULT SHALL INCLUDE THRUST BLOCKING OR JOINT RESTRAINT DEVICES.

(1) TEE, MJ, MAINLINE SIZE BY 4" BRANCH.*

(2) D.I. PIPE, P.E. X FL., LENGTH TO FIT. *

(3) STATE APPROVED INTERNALLY LOADED DOUBLE CHECK VALVE ASSEMBLY, COMPLETE WITH (2) FULL FLOW RESILIENT SEATED SHUT-OFF VALVES AND TEST COCKS.

(4) 4" DI PIPE, PE x PE, LENGTH TO FIT. *

(5) 4" 90° BEND, MJ *

(6) 4" DI PIPE, PE x FL, LENGTH TO FIT. *

(7) CONCRETE VAULT WITH AT LEAST ONE (1) 3'x3' DIAMOND PLATE DOOR (H20 LOADING, LOCKING LID) - COVER TO READ "WATER". SIZE VAULT TO PROVIDE MINIMUM CLEARANCES LISTED IN NOTE 2.

(8) ADJUSTABLE PIPE STANCHION, BOLTED TO FLOOR.

(9) DRAIN, SLOPE TO DAYLIGHT WHERE APPLICABLE (DO NOT CONNECT TO SANITARY SEWER).

* TYPICAL, EACH SIDE OF D.C.V.A.

City of Bellevue — WATER UTILITIES

TITLE: 8" AND 10" DOMESTIC DOUBLE CHECK VALVE ASSEMBLY FOR CONTINUOUS SUPPLY (OUTSIDE INSTALLATION)

NO. W-43

FEBRUARY 28, 1996 — NO SCALE

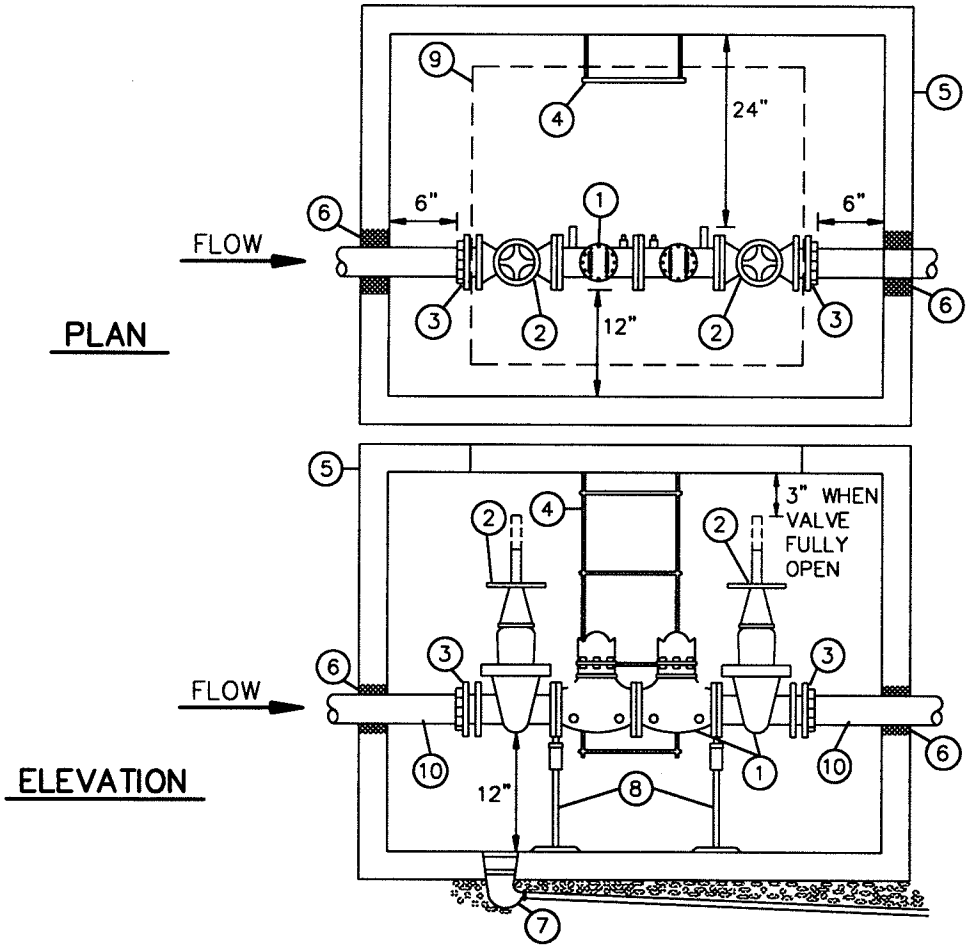

1. STATE APPROVED DOUBLE CHECK VALVE ASSEMBLY, COMPLETE WITH (2) RESILIENT SEATED O.S.&Y. VALVES AND (4) RESILIENT SEATED TEST COCKS.
2. EACH VALVE SHALL BE MARKED WITH MODEL NUMBER WITH DESIGNATION OF RESILIENT SEAT: SUCH AS "RS" OR "R", WHICH MUST BE CAST, MOLDED, OR AFFIXED ONTO THE BODY OR BONNET OF THE VALVE. ALL FERROUS BODIED VALVES SHALL BE COATED WITH A MINIMUM OF 4MLS. OF EPOXY OR EQUIVALENT POLYMERIZED COATING.
3. UNI-FLANGE WITH SETSCREWS.
4. ONE GALVANIZED STEEL LADDER TO BE SECURED TO VAULT.
5. CONCRETE VAULT WITH A MINIMUM OF 2, 3'x3' DIAMOND PLATE DOORS RATED FOR H20 LOADING, MARKED "WATER". VAULT SHALL BE EQUAL TO UTILITY VAULT CO. MODEL LISTED IN TABLE BELOW.
6. WATER TIGHT GROUT. RESTRAIN INLET/OUTLET PIPE WITH WELDED FLANGE OR ANCHOR BLOCKS.
7. DRAIN, SLOPE TO DAYLIGHT WHERE APPLICABLE.
8. TWO ADJUSTABLE PIPE STANCHIONS, BOLTED TO FLOOR.
9. ACCESS TO BE CENTERED OVER ASSEMBLY.
10. CL. 52 D.I., M.J. WITH RETAINER GLANDS.

SIZE	MIN. VAULT SIZE (INSIDE) W	L	H	UTIL. VAULT CO. MODEL	UTIL. VAULT CO. COVER
3"	3'-8"	4'-8"	3'-3"	644-LA	64-2-332P
4"	3'-10"	5'-3"	3'-8"	575-LA	57TL-2-332P
6"	4'-0"	6'-6"	4'-5"	577-LA	57TL-20332P
8"	4'-5"	7'-8"	5'-3"	4484-LA	4484-TL2-332P
10"	4'-8"	8'-8"	6'-1"	5106-LA	5106-TL3-332

NOTES:
1. ASSEMBLY TO BE MAINTAINED BY OWNER AND ANNUAL CERTIFICATION REQUIRED.
2. WATERLINE SHALL NOT BE PUT INTO SERVICE UNTIL THE BACKFLOW PREVENTION ASSEMBLY IS APPROVED BY CITY OF BELLEVUE WATER QUALITY INSPECTOR.
3. VALVE ASSEMBLY TO BE CENTERED IN VAULT.
4. TEE AND GATE VALVE REQUIRED ON MAIN.
5. ALL CLEARANCES SHOWN ARE MINIMUM.
6. VAULTS SHALL NOT BE INSTALLED IN AREAS WITH VEHICULAR TRAFFIC.
7. IN CENTRAL BUSINESS DISTRICT, 3" THROUGH 6" ASSEMBLIES SHALL CONNECT TO WATER MAIN WITH 8" PIPE.

City of Bellevue

WATER UTILITIES

TITLE

3" TO 10" DOUBLE CHECK VALVE ASSEMBLY FOR DOMESTIC AND IRRIGATION SERVICES (OUTSIDE INSTALLATION)

NO. W-44

FEBRUARY 28, 1996

NO SCALE

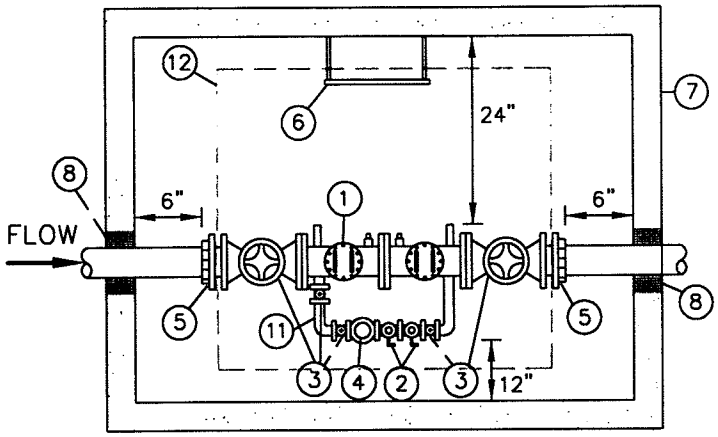

PLAN

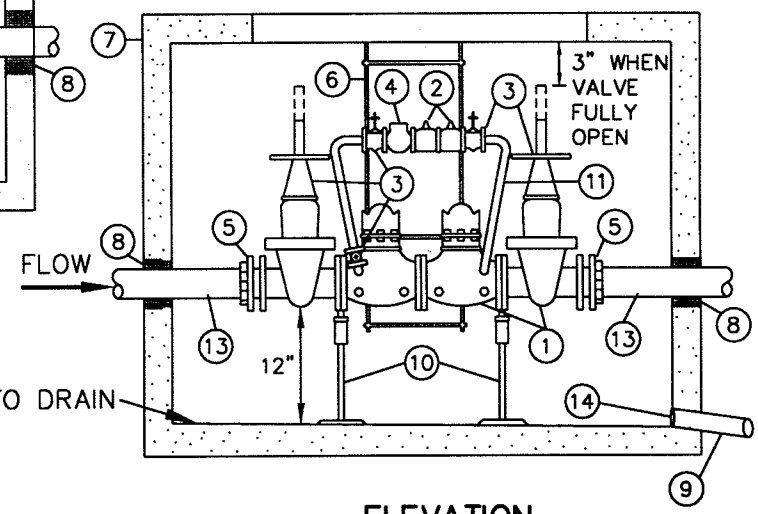

ELEVATION

1. STATE APPROVED DOUBLE CHECK VALVE ASSEMBLY, COMPLETE WITH (2) RESILIENT SEATED O.S.&Y. VALVES AND (4) RESILIENT SEATED TEST COCKS, AND BRASS OR COPPER DETECTOR BY-PASS.
2. STATE APPROVED 3/4" DOUBLE CHECK VALVE ASSEMBLY, COMPLETE WITH (2) RESILIENT SEATED BALL VALVES AND (4) RESILIENT SEATED TEST COCKS.
3. EACH VALVE SHALL BE MARKED WITH MODEL NUMBER WITH DESIGNATION OF RESILIENT SEAT: SUCH AS "RS" OR "R", WHICH MUST BE CAST, MOLDED, OR AFFIXED ONTO THE BODY OR BONNET OF THE VALVE. ALL FERROUS BODIED VALVES SHALL BE COATED WITH A MINIMUM OF 4MLS. OF EPOXY OR EQUIVALENT POLYMERIZED COATING.
4. 3/4" METER (CUBIC FEET READING)
5. UNI-FLANGE WITH SETSCREWS.
6. ONE GALVANIZED STEEL LADDER TO BE SECURED TO VAULT.
7. CONCRETE VAULT WITH A MINIMUM OF 2, 3'x3' DIAMOND PLATE DOORS RATED FOR H20 LOADING, MARKED "WATER". VAULT SHALL BE EQUAL TO UTILITY VAULT CO. MODEL LISTED IN TABLE BELOW.
8. WATER TIGHT GROUT. RESTRAIN INLET/OUTLET PIPE WITH WELDED FLANGE OR ANCHOR BLOCKS.
9. DRAIN, SLOPE TO DAYLIGHT, 4" MINIMUM DIAMETER.
10. TWO ADJUSTABLE PIPE STANCHIONS, BOLTED TO FLOOR.
11. ALL PLUMBING FOR BY-PASS TO BE COPPER AND BRASS.
12. ACCESS TO BE CENTERED OVER METER.
13. CL. 52 D.I., M.J. WITH RETAINER GLANDS.
14. INSTALL WIRE MESH RODENT SCREEN OVER DRAIN OUTLET.

NOTES:
1. ASSEMBLY TO BE MAINTAINED BY OWNER AND ANNUAL CERTIFICATION REQUIRED.
2. FIRELINE SHALL NOT BE PUT INTO SERVICE UNTIL THE BACKFLOW PREVENTION ASSEMBLY IS APPROVED BY CITY OF BELLEVUE WATER QUALITY INSPECTOR.
3. VAULT ASSEMBLY TO BE CENTERED IN VAULT.
4. TEE & GATE VALVE REQUIRED ON MAIN.
5. WHEN DOUBLE CHECK VALVE ASSEMBLY IS USED IN SAME LINE WITH DOMESTIC BUILDING METER, METERED DETECTOR BYPASS SHALL BE OMITTED.
6. ALL CLEARANCES SHOWN ARE MINIMUM.
7. VAULTS SHALL NOT BE INSTALLED IN AREAS WITH VEHICULAR TRAFFIC.
8. IN CENTRAL BUSINESS DISTRICT, 3" THROUGH 6" ASSEMBLIES SHALL CONNECT TO WATER MAIN WITH 8" PIPE.
9. FDC & PIV TO BE LOCATED DOWNSTREAM OF DCVA.

SIZE	MIN. VAULT SIZE (INSIDE) W	L	H	UTIL. VAULT CO. MODEL	UTIL. VAULT CO. COVER
3"	4'-2"	4'-8"	3'-3"	675-WA	675-2-332P
4"	4'-6"	5'-3"	3'-8"	675-WA	675-2-332P
6"	4'-8"	6'-6"	4'-5"	675-WA	675-2-332P
8"	5'-0"	7'-8"	5'-3"	687-LA	687-TL-2-332
10"	5'-2"	8'-8"	6'-1"	5106-LA	5106-TL3-332

City of Bellevue

WATER UTILITIES

TITLE
3" TO 10" DOUBLE CHECK VALVE ASSEMBLY WITH DETECTOR FOR FIRE SPRINKLER SYSTEMS (OUTSIDE INSTALLATION)

NO. W-45

JULY 16, 1998

NO SCALE

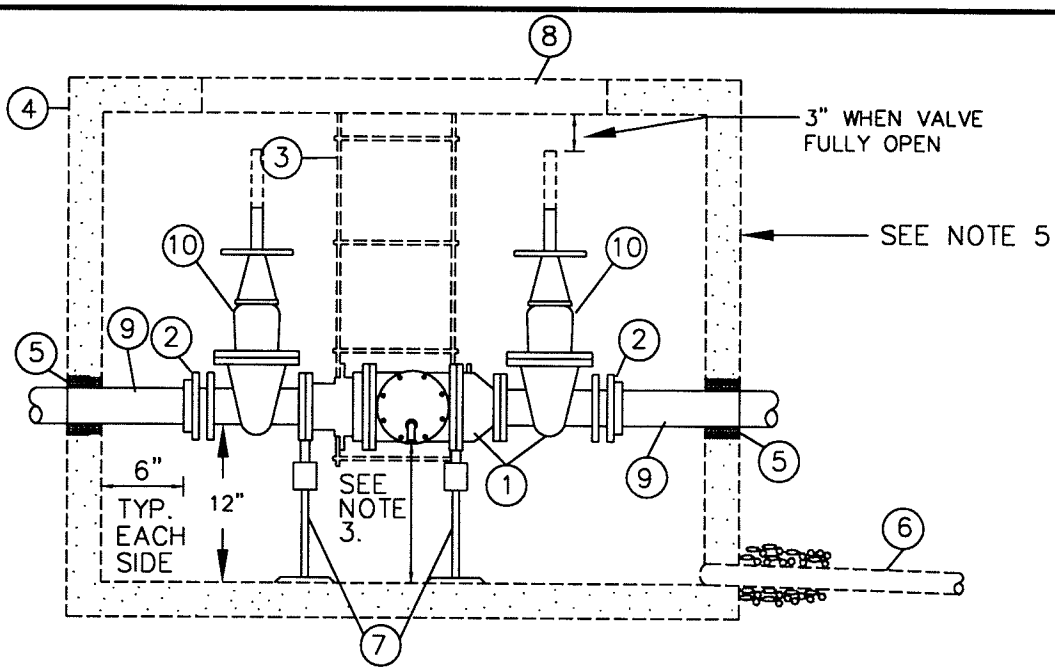

PROFILE

1. STATE APPROVED REDUCED PRESSURE PRINCIPLE BACKFLOW ASSEMBLY, COMPLETE WITH (2) RESILIENT SEATED O.S.&Y. GATE VALVES AND (4) RESILIENT SEATED TEST COCKS.
2. UNI-FLANGE WITH SETSCREWS.
3. ONE GALVANIZED STEEL LADDER TO BE SECURED TO VAULT.
4. CONCRETE VAULT WITH A MINIMUM OF 2, 3'x3' DIAMOND PLATE DOORS RATED FOR H-20 LOADING, MARKED "WATER". VAULT SHALL BE EQUAL TO UTILITY VAULT CO. MODEL LISTED IN TABLE BELOW.
5. WATER TIGHT GROUT. RESTRAIN INLET/OUTLET PIPE WITH WELDED FLANGE OR ANCHOR BLOCK.
6. DRAIN, SLOPE TO DAYLIGHT. TO BE LAID IN LINE ON GRADE AS SIZED BY CITY OF BELLEVUE.
7. TWO ADJUSTABLE PIPE STANCHIONS, BOLTED TO FLOOR.
8. ACCESS TO BE CENTERED OVER ASSEMBLY.
9. CL. 52 D.I., M.J. WITH RETAINER GLANDS.
10. EACH VALVE SHALL BE MARKED WITH MODEL NUMBER WITH DESIGNATION OF RESILIENT SEAT: SUCH AS "RS" OR "R", WHICH MUST BE CAST, MOLDED, OR AFFIXED ONTO THE BODY OR BONNET OF THE VALVE. ALL FERROUS BODIED VALVES SHALL BE COATED WITH A MINIMUM OF 4MLS. OF EPOXY OR EQUIVALENT POLYMERIZED COATING.

SIZE	MIN. VAULT SIZE (INSIDE) W	L	H	UTIL. VAULT CO. MODEL	UTIL. VAULT CO. COVER
3"	4'-3"	4'-8"	3'-11"	575-LA	64-2-332P
4"	4'-3"	5'-3"	4'-7"	577-LA	57TL-2-332P
6"	4'-4"	6'-6"	5'-5"	4484-LA	4484-TL2-332P
8"	5'-2"	7'-7"	7'-1"	687-LA	687-TL-2-332
10"	5'-4"	8'-8"	8'-0"	5106-2X	5106-TL3-332

NOTES:
1. DAYLIGHT DRAIN MUST BE ABLE TO BE LINE SIGHTED, INSTALLED ABOVE MAXIMUM FLOOD LEVEL, AND BE ABLE TO HANDLE THE VOLUME OF WATER THAT CAN BE DISCHARGED FROM THE RELIEF VALVE PORT.
2. WHEN THE REDUCED PRESSURE ASSEMBLY IS LOCATED INSIDE A BUILDING A SIZED DRAIN LINE SHALL BE PROVIDED FOR RELIEF PORT. THERE MUST BE AN APPROVED AIR GAP BETWEEN THE RELIEF PORT AND DRAIN.
3. ALLOW 12"+ NOMINAL DIAMETER OF ASSEMBLY CLEARANCE BELOW RELIEF PORT FOR REPAIR.
4. ASSEMBLY TO BE MAINTAINED BY OWNER AND ANNUAL CERTIFICATION REQUIRED.
5. REDUCED PRESSURE PRINCIPLE BACKFLOW ASSEMBLY WILL BE ALLOWED TO BE INSTALLED IN VAULTS ONLY IN CASES WHERE NO OTHER MEANS OF INSTALLATION IS AVAILABLE AND AS APPROVED BY THE CITY OF BELLEVUE.
6. WATERLINE SHALL NOT BE PUT INTO SERVICE UNTIL THE BACKFLOW PREVENTION ASSEMBLY IS APPROVED BY A CITY OF BELLEVUE WATER QUALITY INSPECTOR.
7. MINIMUM CLEARANCE BETWEEN ASSEMBLY AND WALL ON LADDER SIDE OF VAULT IS 24". MINIMUM CLEARANCE FROM OPPOSITE WALL IS 12". ALL CLEARANCES SHOWN ARE MINIMUM.
8. VAULTS SHALL NOT BE INSTALLED IN AREAS WITH VEHICULAR TRAFFIC.
9. TEE AND GATE VALVE REQUIRED ON MAIN.
10. IN CENTRAL BUSINESS DISTRICT, 3" THROUGH 6" ASSEMBLIES SHALL CONNECT TO WATER MAIN WITH 8" PIPE.

City of Bellevue — WATER UTILITIES

TITLE 3" TO 10" REDUCED PRESSURE PRINCIPLE BACKFLOW ASSEMBLY FOR DOMESTIC AND IRRIGATION SERVICE (OUTSIDE INSTALLATION)

NO. W-46

JULY, 1998 — NO SCALE

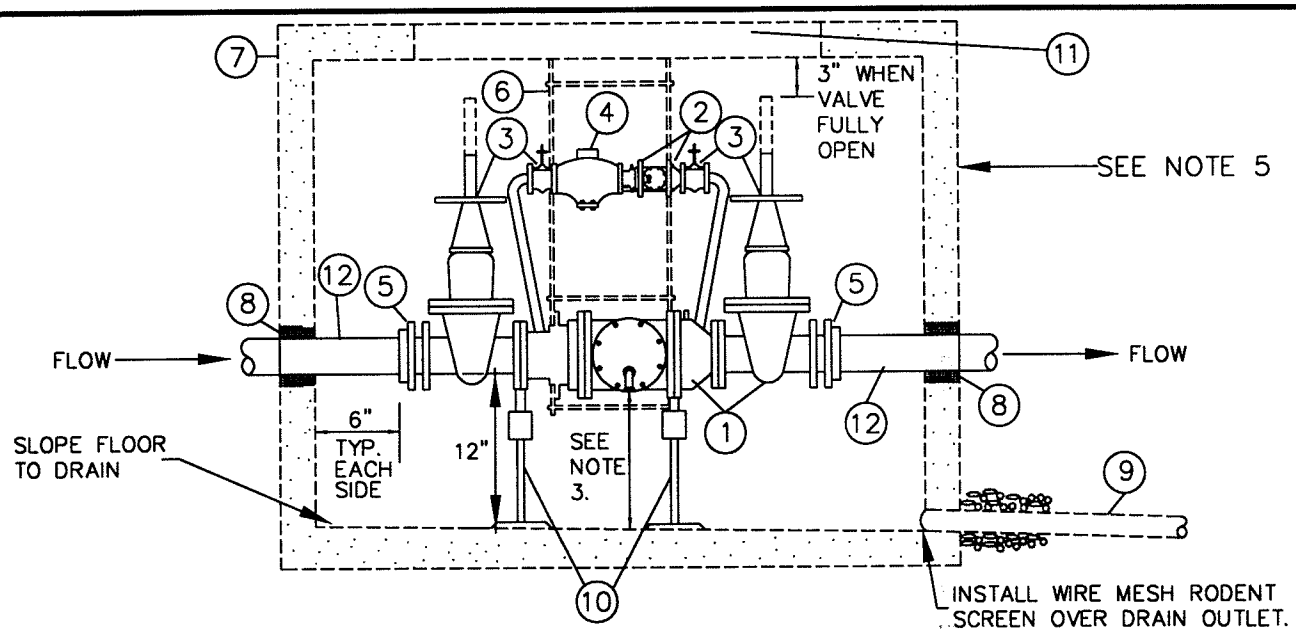

PROFILE

1. STATE APPROVED REDUCED PRESSURE PRINCIPLE BACKFLOW ASSEMBLY, COMPLETE WITH (2) RESILIENT SEATED O.S.&Y. GATE VALVES AND (4) RESILIENT SEATED TEST COCKS, AND BRASS OR COPPER DETECTOR BY-PASS, CENTERED IN VAULT.
2. STATE APPROVED 3/4" REDUCED PRESSURE PRINCIPLE ASSEMBLY ON BY-PASS, COMPLETE WITH (2) RESILIENT SEATED BALL VALVES AND (4) RESILIENT SEATED TEST COCKS.
3. EACH VALVE SHALL BE MARKED WITH MODEL NUMBER WITH DESIGNATION OF RESILIENT SEAT: SUCH AS "RS OR "R", WHICH MUST BE CAST, MOLDED, OR AFFIXED ONTO THE BODY OR BONNET OF THE VALVE. ALL FERROUS BODIED VALVES SHALL BE COATED WITH A MIN. OF 4MLS. EPOXY OR EQUIVALENT POLYMERIZED COATING.
4. 3/4" METER (CUBIC FEET READING) AS REQUIRED.
5. UNI-FLANGE WITH SETSCREWS.
6. ONE GALVANIZED STEEL LADDER TO BE SECURED TO VAULT.
7. CONCRETE VAULT WITH A MINIMUM OF 2, 3'x3' DIAMOND PLATE DOORS RATED FOR H-20 LOADING, MARKED "WATER". VAULT SHALL BE EQUAL TO UTILITY VAULT CO. MODEL LISTED IN TABLE BELOW.
8. WATER TIGHT GROUT. RESTRAIN INLET/OUTLET PIPE WITH WELDED FLANGE OR ANCHOR BLOCK.
9. DRAIN, SLOPE TO DAYLIGHT. TO BE LAID IN LINE ON GRADE, DRAIN TO BE TWICE THE DIAMETER OF THE RP DEVICE MINIMUM.
10. TWO ADJUSTABLE PIPE STANCHIONS, BOLTED TO FLOOR.
11. ACCESS TO BE CENTERED OVER METER.
12. CL. 52 D.I., M.J. WITH RETAINER GLANDS.

SIZE	MIN. VAULT SIZE (INSIDE) W	L	H	UTIL. VAULT CO. MODEL	UTIL. VAULT CO. COVER
3"	4'-9"	4'-8"	3'-11"	675-WA	675-2-332P
4"	5'-0"	5'-3"	4'-7"	675-WA	675-2-332P
6"	5'-1"	6'-6"	5'-5"	676-WA	676-2-332P
8"	5'-9"	7'-7"	7'-1"	687-LA	687-TL-2-332
10"	5'-10"	8'-8"	8'-0"	612-2X	612-3-332P

NOTES:
1. DAYLIGHT DRAIN MUST BE ABLE TO BE LINE SIGHTED, INSTALLED ABOVE MAXIMUM FLOOD LEVEL, AND BE ABLE TO HANDLE THE VOLUME OF WATER THAT CAN BE DISCHARGED FROM THE RELIEF VALVE PORT.
2. WHEN THE REDUCED PRESSURE ASSEMBLY IS LOCATED INSIDE A BUILDING A SIZED DRAIN LINE SHALL BE PROVIDED FOR RELIEF PORT. THERE MUST BE AN APPROVED AIR GAP BETWEEN THE RELIEF PORT AND DRAIN.
3. ALLOW 12"+ NOMINAL DIAMETER OF ASSEMBLY CLEARANCE BELOW RELIEF PORT FOR REPAIR.
4. ASSEMBLY TO BE MAINTAINED BY OWNER AND ANNUAL CERTIFICATION REQUIRED.
5. REDUCED PRESSURE PRINCIPLE BACKFLOW ASSEMBLY WILL BE ALLOWED TO BE INSTALLED IN VAULTS ONLY IN CASES WHERE NO OTHER MEANS OF INSTALLATION IS AVAILABLE AND AS APPROVED BY THE CITY OF BELLEVUE.
6. FIRELINE SHALL NOT BE PUT INTO SERVICE UNTIL THE BACKFLOW PREVENTION ASSEMBLY IS APPROVED BY A CITY OF BELLEVUE WATER QUALITY INSPECTOR.
7. MINIMUM CLEARANCE BETWEEN ASSEMBLY AND WALL ON LADDER SIDE OF VAULT IS 24". MINIMUM CLEARANCE FROM OPPOSITE WALL 12". ALL CLEARANCES SHOWN ARE MINIMUM.
8. VAULTS SHALL NOT BE INSTALLED IN AREAS WITH VEHICULAR TRAFFIC.
9. TEE AND GATE VALVE REQUIRED ON MAIN.
10. IN CENTRAL BUSINESS DISTRICT, 3" THROUGH 6" ASSEMBLIES SHALL CONNECT TO WATER MAIN WITH 8" PIPE.
11. FDC & PIV TO BE LOCATED DOWNSTREAM OF RPBA.

City of Bellevue — WATER UTILITIES

TITLE 3" TO 10" REDUCED PRESSURE PRINCIPLE BACKFLOW ASSEMBLY WITH DETECTOR FOR FIRE SPRINKLER SYSTEMS (OUTSIDE INSTALLATION) NO. W-47

JULY, 1998 NO SCALE

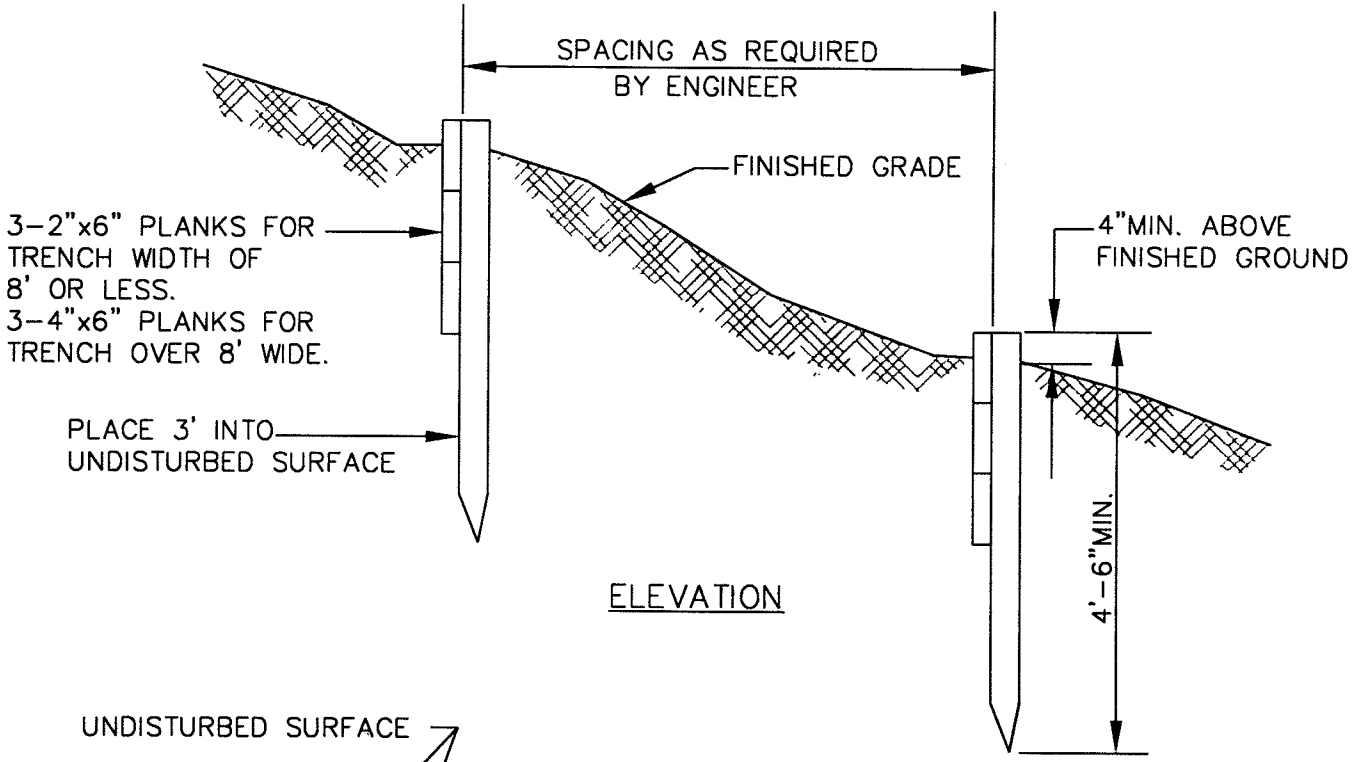

ELEVATION

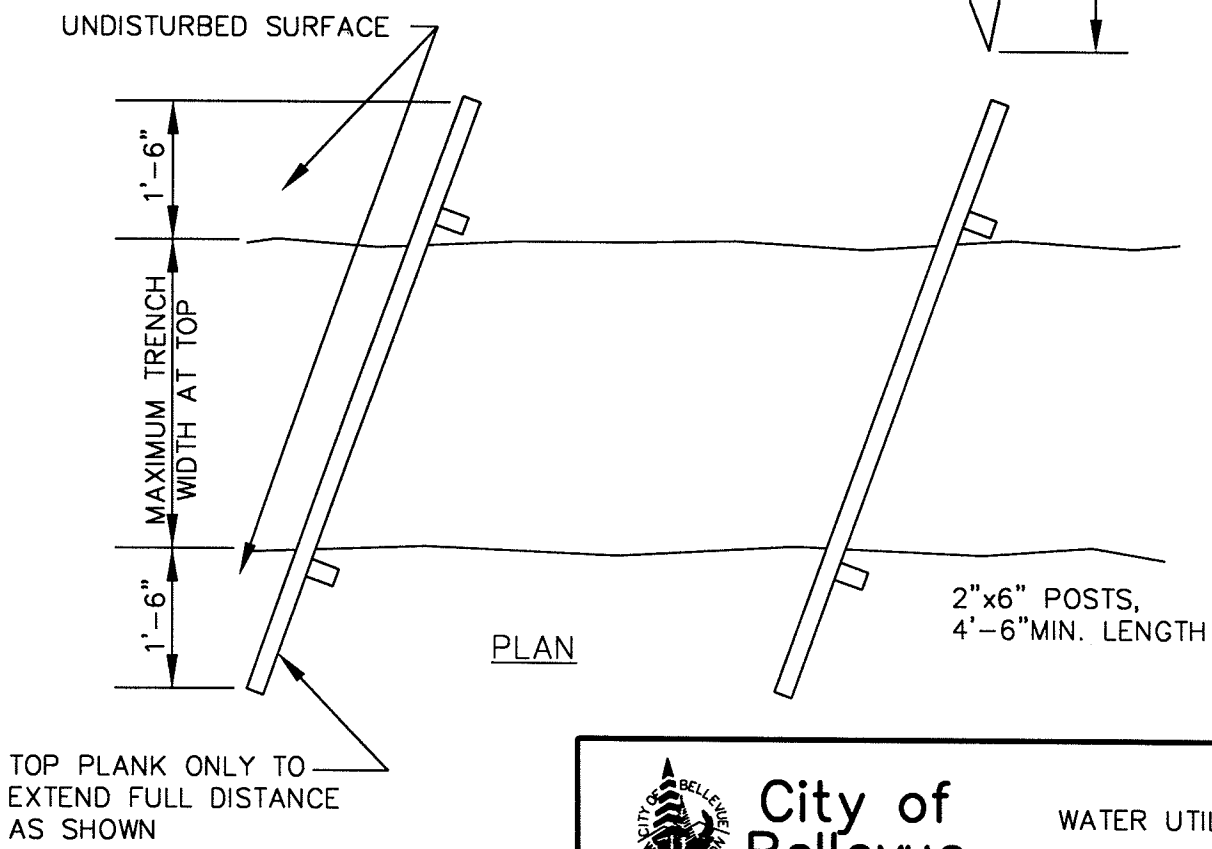

PLAN

City of Bellevue

WATER UTILITIES

TITLE

TIMBER BAFFLE/HILL HOLDER

JULY, 1998

NO SCALE

NO. W-48

APPENDIX W-2

DRAFTING STANDARDS

WATER SYMBOLS ..... PAGE 1

SANITARY/STORM SEWER SYMBOLS ..... PAGE 2

SURVEY SYMBOLS ..... PAGE 3

SURFACE FEATURES/LANDSCAPE SYMBOLS ..... PAGE 4

SIGNALIZATION SYMBOLS ..... PAGE 5

CHANNELIZATION SYMBOLS ..... PAGE 7

GAS/POWER/TELEPHONE SYMBOLS ..... PAGE 8

SURFACE FEATURES LINETYPES ..... PAGE 9

SURVEY LINETYPES ..... PAGE 10

UTILITIES LINETYPES ..... PAGE 11

TEXT STYLES ..... PAGE 12

NOTES ..... PAGE 12

WATER SYMBOLS

SYMBOL EXIST.	SYMBOL PROP.	DESCRIPTION	BLOCK	LAYER
		ADAPTER, FL. x M.J.	WAFM/SAME	WA–FITT–3333–SYM
		BENDS:		
		90 DEGREE BEND, FL.	W90F/SAME	WA–FITT–3333–SYM
		45 DEGREE BEND, FL.	W45F/SAME	WA–FITT–3333–SYM
		22.5 DEGREE BEND, FL.	W22F/SAME	WA–FITT–3333–SYM
		11.25 DEGREE BEND, FL.	W11F/SAME	WA–FITT–3333–SYM
		90 DEGREE BEND, M.J.	W90M/SAME	WA–FITT–3333–SYM
		45 DEGREE BEND, M.J.	W45M/SAME	WA–FITT–3333–SYM
		22.5 DEGREE BEND, M.J.	W22M/SAME	WA–FITT–3333–SYM
		11.25 DEGREE BEND, M.J.	W11M/SAME	WA–FITT–3333–SYM
		VERTICAL BEND, FL.	WVTF/SAME	WA–FITT–3333–SYM
		VERTICAL BEND, M.J.	WVTM/SAME	WA–FITT–3333–SYM
		REDUCERS:		
		REDUCER, FL.	WRF/WRFP	WA–FITT–3333–SYM
		REDUCER, M.J.	WRM/WRMP	WA–FITT–3333–SYM
		REDUCER, M.J. x FL.	WRMF/WRMFP	WA–FITT–3333–SYM
		REDUCER, M.J. x P.E.	WRMB/WRMBP	WA–FITT–3333–SYM
		REDUCER, P.E. x M.J./FL. x M.J.	WRBM/WRBMP	WA–FITT–3333–SYM
		TEES:		
		TAPPING TEE & VALVE, FL. x M.J.	WTTM/WTTMP	WA–VALV–3333–SYM
		TEE, FL.	WTF/SAME	WA–FITT–3333–SYM
		TEE, M.J.	WTM/SAME	WA–FITT–3333–SYM
		TEE, M.J. x FL.	WTMF/SAME	WA–FITT–3333–SYM
		VALVES:		
		BUTTERFLY VALVE, FL.	WBFV/WBFVP	WA–VALV–3333–SYM
		BUTTERFLY VALVE, FL. x M.J.	WBVFM/WBVFMP	WA–VALV–3333–SYM
		BUTTERFLY VALVE, M.J.	WBVM/WBVMP	WA–VALV–3333–SYM
		GATE VALVE, FL.	WGV/WGVP	WA–VALV–3333–SYM
			SAME – INDICATES USE SAME BLOCK FOR PROPOSED.	3333–USE EXST/PRO

American Public Works Association Washington State Chapter

City of Bellevue

WATER SYMBOLS

SYMBOL EXIST.	SYMBOL PROP.	DESCRIPTION (ABBR)		BLOCK	LAYER
		GATE VALVE, FL. x M.J.		WGVFM/WGVFMP	WA–VALV–3333–SYM
		GATE VALVE, M.J.		WGVM/WGVMP	WA–VALV–3333–SYM
		AIR RELIEF VALVE	(AIR)	WARV/WARVP	WA–VALV–3333–SYM
		BLOW–OFF VALVE	(BO)	WBOV/WBOVP	WA–VALV–3333–SYM
		CHECK VALVE	(CK)	WCKV/WCKVP	WA–VALV–3333–SYM
		PLUG VALVE	(PV)	WPV/WPVP	WA–VALV–3333–SYM
		CAP/PLUG		WCAP	WA–FITT–3333–SYM
		COUPLING	(CPL)	WCOUP/WCOUPP	WA–FITT–3333–SYM
		GUARD POST	(GP)	WGP/WGPP	WA–FITT–3333–SYM
		REDUCER	(RED)	WRED/WREDP	WA–FITT–3333–SYM
		THRUST BLOCK	(TB)	WTB/WTBP	WA–FITT–3333–SYM
		WATER METER	(WM)	WMET/WMETP	WA–METR–3333–SYM
		FIRE HYDRANTS:			
		2–PORT	(FH)	WFH2/WFH2P	WA–FHYD–3333–SYM
		3–PORT	(FH)	WFH3/WFH3P	WA–FHYD–3333–SYM
		JOINTS:			
		FLANGE/BLIND FL	(FL)/(BL FL)	WFL	WA–FITT–3333–SYM
		MECHANICAL	(MJ)	WMJ	WA–FITT–3333–SYM
		PUSH–ON/HUB		WHUB	WA–FITT–3333–SYM
		THREAD	(THD)	WTH	WA–FITT–3333–SYM

3333 – USE EXST/PROP

SANITARY/STORM SEWER SYMBOLS

SYMBOL EXIST.	SYMBOL PROP.	DESCRIPTION (ABBR)		BLOCK	LAYER
		SAN. SEWER CLEAN OUT	(CO)	SSCO/SSCOP	SS–STCR–3333–SYM
		SAN. SEWER MANHOLE	(SSMH)	SSMH/SSMHP	SS–STCR–3333–SYM
		STORM DRAIN CATCH BASIN	(CB)	SDCB/SDCBP	SD–STCR–3333–SYM
		STORM DRAIN CULVERT	(CULV)	SDC/SDCP	SD–GLIN–3333–SYM
		STORM DRAIN MANHOLE	(SDMH)	SDMH/SDMHP	SD–STCR–3333–SYM

3333 – USE EXST/PR(

American Public Works Association Washington State Chapter

City of Bellevue

SURVEY SYMBOLS

SYMBOL THEOR./ EXIST.	SYMBOL FOUND/ PROP.	DESCRIPTION	(ABBR)	BLOCK	LAYER
		ANGLE POINT	(AP)	SAP/SAPP	SV–CTRL–3333–SYM
		BENCH MARK	(BM)	SBM/SBMP	SV–CTRL–3333–SYM
		BLOCK CORNER	(BC)	SBC/SBCP	SV–CTRL–3333–SYM
		IRON PIPE	(IP)	SIP/SIPP	SV–CTRL–3333–SYM
		MONUMENT (IN CASE)	(MIC)	SMIC/SMICP	SV–CTRL–3333–SYM
		MONUMENT (SURFACE)	(MON)	SMON/SMONP	SV–CTRL–3333–SYM
		OWNERSHIP TIE	(OT)	SOT	SV–LOTN–3333–SYM
		SECTION DATA:			
		SECTION CENTER		SSCT	SV–SECT–3333–SYM
		SECTION CORNER		SSC/SSCP	SV–SECT–3333–SYM
		QUARTER CORNER		SQC/SQCP	SV–QSCT–3333–SYM
		SIXTEENTH CORNER		SSXC/SSXCP	SV–16ST–3333–SYM
		CLOSING CORNER		SCC/SCCP	SV–222A–3333–SYM
MC	MC	MEANDER CORNER	(MC)	SMC/SMCP	SV–222A–3333–SYM
WC	WC	WITNESS CORNER	(WC)	SWC/SWCP	SV–SECT–3333–SYM
		SOIL BORING	(SB)	SSB/SSBP	SV–SOIL–3333–SYM
		SPOT ELEVATION	(SE)	SSE/SSEP	SV–CTRL–3333–SYM
		TAX LOT / PARCEL NUMBER		STLN	SV–222B–3333–SYM

222A – USE RANG/SECT/TWNS
222B – USE PRCL/LOTN
3333 – USE EXST/PROP OR FOUN/THEO

BLOCK: SNA

LAYER: SV–NORA–3333–SYM

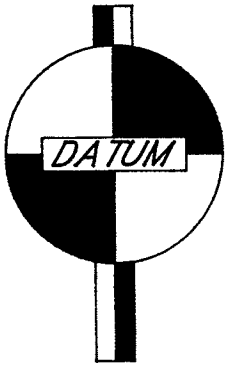

BLOCK: SDAT

LAYER: SV–DATM–3333–SYM

SURFACE FEATURES/LANDSCAPING

SYMBOL EXIST.	SYMBOL PROP.	DESCRIPTION	BLOCK	LAYER
BUS	BUS	BUS STOP	SFBS/SFBSP	SF-BUSS-3333-SYM
		EMBANKMENT	SFB/SFBP	SF-EMBT-3333-SYM
		MAIL BOX	SFMB/SFMBP	SF-MAIL-3333-SYM
		RIP RAP	SFRR/SFRRP	SF-RIPR-3333-SYM
		ROCKERY	SFR/SFRP	SF-ROCK-3333-SYM
		SHRUB	SFS/SFSP	SF-VEGE-3333-SYM
		SIGN	SFSN/SFSNP	SF-SIGN-3333-SYM
		TREE (Conifer)	SFC/SFCP	SF-VEGE-3333-SYM
		TREE (Deciduous)	SFD/SFDP	SF-VEGE-3333-SYM
		YARD LIGHT	SFL/SFLP	SF-LITE-3333-SYM

3333 - USE EXST/PROP

SIGNALIZATION SYMBOLS

SYMBOL EXIST.	SYMBOL PROP.	DESCRIPTION	BLOCK	LAYER
		AERIAL DISCONNECT	TAD/TADP	TF-SIGL-3333-SYM
		AERIAL TERMINAL COMPARTMENT	TATC/TATCP	TF-SIGL-3333-SYM
		DETECTORS:		
		DIPOLE DETECTOR	TDD/TDDP	TF-SIGL-3333-SYM
		QUADRAPOLE DETECTOR	TQD/TQDP	TF-SIGL-3333-SYM
		PEDESTRIAN DETECTOR	TPD/TPDP	TF-SIGL-3333-SYM
		EMERGENCY VEHICLE INDICATOR LIGHTS:		
		INDICATOR LIGHTS	TIL/TILP	TF-SIGL-3333-SYM
		OPTICOM SENSOR	TOS/TOSP	TF-SIGL-3333-SYM
		OPTICOM SENSOR W/ INDICATOR LIGHTS	TOSL/TOSLP	TF-SIGL-3333-SYM
		FLASHING WARNING SYSTEM	TFWS/TFWSP	TF-SIGL-3333-SYM
		JUNCTION BOX (TYPE I, II, III)	TJB1/TJB1P TJB2/TJB2P TJB3/TJB3P	TF-SIGL-3333-SYM TF-SIGL-3333-SYM TF-SIGL-3333-SYM
		PEDESTRIAN PUSHBUTTON POST W/ PUSHBUTTON	TPB/TPBP	TF-SIGL-3333-SYM
		PEDESTRIAN SIGNAL HEAD	TPSH/TPSHP	TF-SIGL-3333-SYM
		POLE NOTE	TPN	TF-SIGL-3333-SYM
		R/R CROSSING GATE	TRG/TRGP	TF-SIGL-3333-SYM
		R/R CROSSING SIGNAL	TRC/TRCP	TF-SIGL-3333-SYM

3333-USE EXST/PRO

SIGNALIZATION SYMBOLS

SYMBOL EXIST.	SYMBOL PROP.	DESCRIPTION	BLOCK	LAYER
		SIGNAL CONTROLLER	TSC/TSCP	TF-SIGL-3333-SYM
		SIGNAL LOAD CENTER	TSLC/TSLCP	TF-SIGL-3333-SYM
		STREET LIGHT ASSEMBLY	TSLA/TSLAP	TF-SIGL-3333-SYM
		TRAFFIC SIGNS:		
		BRIDGE	TSB/TSBP	TF-SIGN-3333-SYM
		CANTILEVERED	TSCL/TSCLP	TF-SIGN-3333-SYM
		SINGLE POST	TSS/TSSP	TF-SIGN-3333-SYM
		DOUBLE POST	TSD/TSDP	TF-SIGN-3333-SYM
		TRAFFIC SIGNAL POLE	TPOL/TPOLP	TF-SIGL-3333-SYM
		TRAFFIC SIGNAL POLE W/ LUMINAIRE	TSPL/TSPLP	TF-SIGL-3333-SYM
		TRAFFIC SIGNAL SUPPORT POLE	TSPOL/TSPOLP	TF-SIGL-3333-SYM
		VEHICLE SIGNAL HEAD	TVH/TVHP	TF-SIGL-3333-SYM
		VEHICLE SIGNAL HEAD W/ARROW INDICATOR	TVHA/TVHAP	TF-SIGL-3333-SYM
		WIRE NOTE	TWN	TF-SIGL-3333-SYM

3333 – USE EXST/PROP

CHANNELIZATION SYMBOLS

SYMBOL EXIST.	SYMBOL PROP.	DESCRIPTION	BLOCK	LAYER
		BIKE PATH	CB/CBP	TF-CHAN-3333-SYM
		HANDICAP SYMBOL	CHS/CHSP	TF-CHAN-3333-SYM
		H.O.V. LANE SYMBOL	CHOV/CHOVP	TF-CHAN-3333-SYM
ONLY	ONLY	ONLY	CO/COP	TF-CHAN-3333-SYM
RR	RR	RAILROAD CROSSING	CRR/CRRP	TF-CHAN-3333-SYM
SCHOOL	SCHOOL	SCHOOL	CSC/CSCP	TF-CHAN-3333-SYM
STOP	STOP	STOP	CS/CSP	TF-CHAN-3333-SYM
		LANE CONTROL ARROWS: STRAIGHT ARROW	CSA/CSAP	TF-CHAN-3333-SYM
		LT.RT.STR.ARROW	CLRS/CLRSP	TF-CHAN-3333-SYM
		LEFT-RIGHT ARROW	CLR/CLRP	TF-CHAN-3333-SYM
		2-WAY LEFT TURN	C2W/C2WP	TF-CHAN-3333-SYM
				3333 - USE EXST/PROP

American Public Works Association Washington State Chapter

City of Bellevue

CHANNELIZATION SYMBOLS

SYMBOL EXIST.	SYMBOL PROP.	DESCRIPTION	BLOCK	LAYER
		LEFT TURN ARROW	CLT/CLTP	TF–CHAN–3333–SYM
		RIGHT TURN ARROW	CRT/CRTP	TF–CHAN–3333–SYM
		LEFT–SRAIGHT ARROW	CLS/CLSP	TF–CHAN–3333–SYM
		RIGHT–STRAIGHT ARROW	CRS/CRSP	TF–CHAN–3333–SYM
		RAISED MARKERS:		
○	●	LANE MARKERS TYPE I	CLM1/CLM1P	TF–CHAN–3333–SYM
□	■	LANE MARKERS TYPE II	CLM2/CLM2P	TF–CHAN–3333–SYM
				3333 – USE EXST/PROP

GAS/POWER/TELEPHONE SYMBOLS

SYMBOL EXIST.	SYMBOL PROP.	DESCRIPTION	(ABBR)	BLOCK	LAYER
		GAS METER	(GM)	GMET/GMETP	GS–METR–3333–SYM
		GAS VALVE	(GV)	GV/GVP	GS–VALV–3333–SYM
△	▲	PAD MOUNTED TRANSFORMER	(P TRAN)	PTRAN/PTRANP	PO–STCR–3333–SYM
P	P	POWER VAULT	(POW V)	PV/PVP	PO–STCR–3333–SYM
⊠		TRANSMISSION TOWER	(TRANS TWR)	PTWR	PO–STCR–EXST–SYM
-o-	-●-	UTILITY POLE	(PP, TP)	UP/UPP	11–STCR–3333–SYM
←	←	UTILITY POLE ANCHOR		UPA/UPAP	11–STCR–3333–SYM
□	■	TELEPHONE RISER	(TEL R)	TELR/TELRP	TL–STCR–3333–SYM
T	T	TELEPHONE VAULT	(TEL V)	TV/TVP	TL–STCR–3333–SYM 11 – USE PO/TL 3333 – USE EXST/PROP

American Public Works Association Washington State Chapter

City of Bellevue

LINETYPES

LINETYPE	DESCRIPTION	COLOR	LT NAME	LAYER
	SURFACE FEATURES:			
0.2" 0.1"	BUILDING LINE (EXISTING) NO. 2.5 PEN	GREEN	EXBUILD	SF–BLDG–EXST–LIN
	BUILDING LINE (PROPOSED) NO. 2.5 PEN	GREEN	CONTINUOUS	SF–BLDG–PROP–LIN
1.5" 0.1" 0.1" 0.05"	CREEK/DITCH CENTERLINE (EXIST.) NO. 0 PEN	WHITE	DITCH	SF–DTCH–EXST–LIN
	CREEK/DITCH CENTERLINE (PROP.) NO. 2.5 PEN	GREEN	DITCH	SF–DTCH–PROP–LIN
	CURB/PAVEMENT/SIDEWALK (EX) NO. 0 PEN	WHITE	CONTINUOUS	SF–222A–EXST–LIN
	CURB/PAVEMENT/SIDEWALK (PROP) NO. 1 PEN	CYAN	CONTINUOUS	SF–222A–PROP–LIN
1.0" 0.075"	FENCE (EXISTING) NO. 000 PEN	YELLOW	FNC1	SF–FENC–EXST–LIN
	FENCE (PROPOSED) NO. 1 PEN	CYAN	FNC1	SF–FENC–PROP–LIN
1.0" 0.075"	GUARDRAIL (EXISTING) NO. 000 PEN	YELLOW	EGR1	SF–GURD–EXST–LIN
	GUARDRAIL (PROPOSED) NO. 1 PEN	CYAN	PGR1	SF–GURD–PROP–LIN
2.0" 0.1" 0.1"	LAKE/POND NO. 0 PEN	WHITE	LAKE	SF–LAKE–EXST–LIN
0.15" 0.15"	MARSH/SWAMP PERIMETER NO. 0 PEN	WHITE	MARSH	SF–SWMP–EXST–LIN
0.5" 0.1" 0.125"	RAILROAD NO. 0 PEN	WHITE	R1R1	SF–RLRD–EXST–LIN
0.075"	RETAINING WALL (EXISTING) NO. 0 PEN	WHITE	ERW1	SF–WALL–EXST–LIN
	RETAINING WALL (PROPOSED) NO. 1 PEN	CYAN	PRW1	SF–WALL–PROP–LIN
	RIVERBANK/SHORELINE NO. 1 PEN	CYAN	CONTINUOUS	SF–222B–EXST–LIN

222A – USE CURB/PVMT

222B – USE RIVR/SHOR

LINETYPES

LINETYPE	DESCRIPTION	COLOR	LT NAME	LAYER
	SURVEY:			
1.2" 0.05" 0.1"	CENTERLINE (EXISTING) NO. 000 PEN	YELLOW	EXCNTL	SV–CNTL–EXST–LIN
0.1"	CENTERLINE (PROPOSED) NO. 2.5 PEN	GREEN	PROCNTL	SV–CNTL–PROP–LIN
0.05"	CONTOUR (DEPRESSION) NO. 000 PEN	YELLOW	DEC1	SV–CONT–DEPR–LIN
0.5" * * * 0.1"	CONTOUR (EXISTING) NO. 000 PEN	YELLOW	CON	SV–CONT–EXST–LIN
* * *	CONTOUR (INDEX) NO. 1 PEN	CYAN	CON	SV–CONT–INDX–LIN
* * *	CONTOUR (PROPOSED) NO. 1 PEN	CYAN	CONTINUOUS	SV–CONT–PROP–LIN
0.1" 0.7" 0.04"	DONATION LAND CLAIM (EXIST.) NO. 1 PEN	CYAN	DLC	SV–DLCM–EXST–LIN
	DONATION LAND CLAIM (PROP.) NO. 2.5 PEN	GREEN	DLC	SV–DLCM–PROP–LIN
	EASEMENT (PERMANENT) NO. 1 PEN	CYAN	CONTINUOUS	SV–ESMT–PERM–LIN
0.4" 0.05"	EASEMENT (TEMPORARY) NO. 1 PEN	CYAN	TEMPESMT	SV–ESMT–TEMP–LIN
0.1" 0.05"	MEANDER LINE NO. 000 PEN	YELLOW	MEANDER	SV–MEAN–EXST–LIN
2.0" 0.075" 0.075"	PROPERTY LINE (EXISTING) NO. 000 PEN	YELLOW	PROPERT	SV–PROP–EXST–LIN
	PROPERTY LINE (PROPOSED) NO. 1 PEN	CYAN	PROPERT	SV–PROP–PF JN
	RANGE/TOWNSHIP LINE NO. 2.5 PEN	GREEN	CONTINUOUS	SV–222A–EXST–LIN
0.5" 0.05" 0.1"	RESERVATION/PARK/FOREST (EX) NO. 1 PEN	CYAN	PARK	SV–PARK–EXST–LIN
	RESERVATION/PARK/FOREST (PRO) NO. 2.5 PEN	GREEN	PARK	SV–PARK–PROP–LIN
0.2" 0.05"	RIGHT–OF–WAY (EXISTING) NO. 1 PEN	CYAN	EXROW	SV–ROFW–EXST–LIN
	RIGHT–OF–WAY (PROPOSED) NO. 2.5 PEN	GREEN	CONTINUOUS	SV–ROFW–PROP–LIN
0.1" 0.1"	RIGHT–OF–WAY (LIMITED ACCESS) NO. 1 PEN	CYAN	ROWL1	SV–LROW–EXST–LIN
	RIGHT–OF–WAY (LIMITED ACCESS) NO. 2.5 PEN	GREEN	ROWL1	SV–LROW–PROP–LIN
0.7" 0.05"	SECTION LINE NO. 2.5 PEN	GREEN	SECT	SV–SECT–EXST–LIN
0.1" 0.1" 0.7"	QUARTER SECTION LINE NO. 1 PEN	CYAN	QTRSECT	SV–QSCT–EXST–LIN
0.3" 0.1"	SIXTEENTH SECTION LINE NO. 1 PEN	CYAN	16THSECT	SV–16ST–EXST–LIN
0.8" 0.1" 0.2"	STATE/COUNTY/CORPORATE LIMIT NO. 2.5 PEN	GREEN	STATE	SV–222B–EXST–LIN
	STATE/COUNTY/CORPORATE LIMIT NO. 2.5 PEN	GREEN	STATE (PLINE .03"WIDE)	SV–222B–PROP–LIN

222A – USE RANG/TWNS
222B – USE STAT/CNTY/CITY
*** INSERT ELEVATION AT 6" INTERVALS (TEXT 0.1" HIGH)

American Public Works Association Washington State Chapter

City of Bellevue

LINETYPES

LINETYPE	DESCRIPTION	COLOR	LT NAME	LAYER
	UTILITIES (EXISTING):			
0.25" TV 0.1"	CABLE TELEVISION (AERIAL) NO. 0 PEN	RED	ATV	TV–ALIN–EXST–LIN
TV 0.1"	CABLE TELEVISION (BURIED) NO. 0 PEN	RED	TV	TV–BLIN–EXST–LIN
FM	FORCE MAIN NO. 0 PEN	MAGENTA	FM	SS–PLIN–EXST–LIN
G	GAS NO. 0 PEN	MAGENTA	G	GS–PLIN–EXST–LIN
O	OIL NO. 0 PEN	MAGENTA	O	OL–PLIN–EXST–LIN
0.25" P 0.1"	POWER (AERIAL) NO. 0 PEN	RED	AP	PO–ALIN–EXST–LIN
P	POWER (BURIED) NO. 0 PEN	RED	P	PO–BLIN–EXST–LIN
S	SANITARY SEWER NO. 0 PEN	WHITE	S	SS–GLIN–EXST–LIN
STE	STEAM NO. 0 PEN	MAGENTA	STE	ST–PLIN–EXST–LIN
D	STORM DRAINAGE NO. 0 PEN	WHITE	D	SD–2222–EXST–LIN
0.25" T 0.1"	TELEPHONE (AERIAL) NO. 0 PEN	RED	AT	TL–ALIN–EXST–LIN
T	TELEPHONE (BURIED) NO. 0 PEN	RED	T	TL–BLIN–EXST–LIN
0.1" 0.05"	UTILITY SERVICE LINE (GENERAL) NO. 000 PEN	YELLOW	SERV	11–SERV–EXST–LIN
W	WATER NO. 0 PEN	MAGENTA	W	WA–2222–EXST–LIN
	UTILITIES (PROPOSED):			
	MAIN LINE (LIST TYPE, SIZE, ETC.) NO. 0 PEN	*	CONTINUOUS (P–LINE .04" WIDE)	11–2222–PROP–LIN
	SERVICE (LIST TYPE, SIZE, ETC.) NO. 0 PEN	*	CONTINUOUS	11–SERV–PROP–LIN

* COLOR DEPENDS ON TYPE OF UTILITY (E.G. POWER, WATER, ETC.). TEXT IN UTILITY LINETYPES SPACED AT 3" INTERVALS.

11 – INDICATE UTILITY TYPE

2222 – USE ALIN/BLIN/GLIN/PLIN
ALIN – AERIAL LINE
BLIN – BURIED CONDUIT
GLIN – GRAVITY LINE
PLIN – PRESSURE LINE

TEXT STYLES

EXAMPLE	DESCRIPTION	STYLE	FONT	HEIGHT	COLOR	LAYER
EX. CONIFER	EXISTING FEATURES	80	SIMPLEX	0.08 INCH	YELLOW	SF-INFO-EXST-T
SCALE:	DRAWING SCALE	SCALE	ITALIC	0.12 INCH	YELLOW	SV-NORA-EXST-TXT
PROJECT	PROJECT TITLE	200	SIMPLEX	0.20 INCH	GREEN	RE-TITL-EXST-TXT
PROPOSED	GENERAL INSTRUCTION	120	SIMPLEX	0.12 INCH	CYAN	RE-INST-PROP-TXT
SEWER	PROPOSED SANITARY SEWER INSTRUCTIONS	120	SIMPLEX	0.12 INCH	CYAN	SS-INST-PROP-TXT
WATER	PROPOSED WATER INSTRUCTIONS	120	SIMPLEX	0.12 INCH	CYAN	WA-INST-PROP-TXT
STREET	STREET NAMES	240	SIMPLEX	0.24 INCH	GREEN	RE-STRT-EXST-TXT

NOTES

1. READ APWADOC2.DOC FOR MORE INFORMATION ON SYMBOL/LINETYPE INSERTION AND USE OF APWA MENUS.
2. INSERT MON OR MON-IN-CASE SYMBOLS INTO CENTER OF MONUMENTED SECTION CORNERS.
3. USE WATER VALVE AND FITTING SYMBOLS FOR SEWER FORCEMAIN VALVES AND FITTINGS.
4. LINETYPES ARE LOADED FROM THE APWALIN2.LIN LINETYPE FILE.
5. DITCH LINETYPE FLOW DIRECTION ARROW MUST BE INSERTED AT ENDS OF DASHED LINES AS SHOWN ABOVE (BLOCK NAME IS "FL").
6. COMPOSITE LINETYPES ARE DRAWN USING LISP ROUTINES IN APWA MENUS. ALTERNATE METHOD IS TO INSERT BLOCKS ALONG CONTINUOUS LINES AS FOLLOWS:

LINETYPE	BLOCK	SPACING (INCHES)
EXISTING FENCE	FP	1.0
PROPOSED FENCE	FP	1.0
EXISTING GUARDRAIL	GR	1.0
PROPOSED GUARDRAIL	GRP	1.0
EXISTING RAILROAD	RR	0.5
EXISTING RETAINING WALL	EW	0.25
PROPOSED RETAINING WALL	PW	0.25
DEPRESSION CONTOUR	DEP	0.1
LIMITED ACCESS R.O.W.	LA	0.1

7. LINEWEIGHTS ARE BASED ON DISPOSABLE LIQUID INK PLOTTER

POINT SIZES:	COLOR	PEN SIZE	NUMBER
	YELLOW	0.25	3x0
	MAGENTA RED WHITE	0.35	0
	CYAN	0.5	1
	GREEN	0.7	2 1/2

APPENDIX W-3

SAMPLE TITLE BLOCK

SCALE

X 0 .5X X 2X

DATUM
BENCHMARK

PLAN

(PLAN & PROFILE MAY BE ON SEPARATE SHEETS IF NECESSARY)

PROFILE

VICINITY MAP

STANDARD NOTES

DRAINAGE MAP #
WATER GRID #
SEWER GRID #

NO	DATE	BY	APPR	REVISIONS

ENGINEERING COMPANY NAME & ADDRESS

ENGINEER'S STAMP

Approved By

DESIGNED BY DATE
DRAWN BY DATE
CHECKED BY DATE

PROJECT NAME & ADDRESS

SHEET DESCRIPTION

SEC ___ TWP ___ RGE ___ SHT ___ OF ___

APPENDIX W-4

WATER APPROVED MATERIALS LIST

The following manufacturers have been approved for use for water works construction. Where specific manufacturers are listed no other manufacturer may be used without prior approval by the Utility.

DUCTILE IRON PIPE
All manufacturers that meet the performance requirements specified under the material section of the standards.

DUCTILE IRON FITTINGS
All manufacturers that meet the performance requirements specified under the material section of the standards.

GALVANIZED IRON PIPE
All manufacturers that meet the performance requirements specified under the material section of the standards.

JOINT RESTRAINT SYSTEMS
EBAA Iron (MEGALUG Series 1100)
Griffin Pipe Products Company (Snap-Lok, Bolt-Lok)
Romac (Grip Ring)
Star National Products (Shackle Products)
US Pipe (TR FLEX)
Uni-Flange Corporation (Series 1300 and 1390)

COUPLINGS
Romac, Smith-Blair (Rockwell), Mueller MaxiFit, Mueller MaxiStep

CASING SPACERS
Pipeline Seal and Insulator Co.:
8" band, carbon steel with fusion-bonded coating, Model C8G-2
12" band, carbon steel with fusion-bonded coating, Model C12G-2

Cascade Waterworks Mfg. Co.:
Stainless Steel or hot-dip galvanized carbon steel Casing Spacers (catalog number depends on size)

Advance Products & Systems, Inc.:
8" band, stainless steel, Model SSI8
12" band, stainless steel, Model SSI12

8" band, carbon steel with fusion-bonded coating, Model SI8
12" band, carbon steel with fusion-bonded coating, Model SI12

CASING END SEALS

Pipeline Seal and Insulator Co.:
Standard Pull-on (Model S)
Custom Pull-on (Model G)

Cascade Waterworks Mfg. Co.:
CCES End Seal

Advance Products & Systems, Inc.
Molded End Seal, Model AM

GATE VALVES

All manufacturers that meet the performance requirements specified under the material section of the standards.

PRV STATION

- PRESSURE REDUCING VALVES

  CLA-VAL 90G-01ABCSKC } 6"
  CLA-VAL 90G-01ACSKC } 2"

- STRAINERS

  MUESSCO 751 } 6"
  MUESSCO 11-BC } 2"
  (With brass or stainless steel perforated screen, 1/16" diameter, 144 holes per square inch)

- PRESSURE RELIEF VALVES

  CLA-VAL 50G-01KC} 2"

INDIVIDUAL PRESSURE REDUCING VALVES (Residential)

Wilkins 600 with built-in bypass

INDIVIDUAL PRESSURE REDUCING VALVES (Commercial)

- PRESSURE REDUCING VALVES

  Wilkins 600 with built-in bypass

- PRESSURE RELIEF VALVES

  CLA-VAL 55F

SERVICE SADDLES

1" tap:	Romac 101S Ford FS101 (4" through 8" mains) Smith-Blair 315
1 ½" & 2" tap:	Romac 202S Ford FS202 Smith-Blair 317

CORPORATION STOPS

1" size:	Ford F1000, FB1000 Mueller No. H-15008
1 ½" size:	Ford Ballcorp FB400 Mueller Oriseal No. H-9968
2" size:	Ford Ballcorp FB400 Mueller Oriseal No. H-9968

ANGLE METER VALVES

1 ½" Irrigation:	Ford FV13-666W Mueller 1 ½" H-14286
2" Irrigation:	Ford FV13-777W Mueller 2" H-14286

VALVE BOXES

Olympic Foundry Inc.:	#VB045 Lid, Top and Base Section
RICH (VanRich Casting Corp.):	Top section and lid #045 with RICH Standard Base
Inland Foundry Co., Inc.:	Valve Box Paving Riser #2052-3, #2052-4, #2052-5 12" Adjusting Sleeve #044A

BUTTERFLY VALVES
All manufacturers that meet the performance requirements specified under the material section of the standards.

CHECK VALVES
Rennselaer List 340
Mueller

AIR AND VACUUM RELEASE VALVES
APCO No. 143-C, Val-Matic No. 201C, Crispin UL10

FIRE HYDRANTS
Clow 2500
Mueller Centurion
M & H 129T or 929
Waterous
American-Darling B-62-B
American AVK Co., Model 2780
Clow Medallion

BRASS WATER SERVICE FITTINGS AND VALVES
Approved manufacturers of brass fittings and valves up to 2" sizes include Ford, Mueller, and James Jones Company (except James Jones meter setters, which are not approved). The items supplied shall be equal to the models listed in these Standards.

METER SETTERS
5/8" x 3/4" (horizontal):
Ford V72-12W
Mueller 5/8" x 3/4" No. H-1404 x 12 with multi-purpose connection No. H-14222

5/8" x 3/4" (vertical):
Ford V72-82 x 12W

1" x 1" (horizontal):
Ford V74-12W
Mueller 1" No. H-1404 x 12 with multi-purpose connection No. H-14222

1" x 1" (vertical):
Ford V74-84 x 12W

1 ½" Domestic:
Ford VVB66-6 with high bypass (13 1/4" meter spacing)

2" Domestic:
Ford VBV87-6 with high bypass (17 3/16" meter spacing)

METER BOXES

1" x 3/4" Service:	Fog-Tite 1-D Olympic Foundry SM29
1" x 1" Services:	Fog-Tite B-10D Olympic Foundry SM30
1 ½" and 2" Domestic:	Fog-Tite No. 2 Olympic Foundry SM30
1 ½" and 2" Irrigation:	Fog-Tite No. 2 Olympic Foundry SM30

Lightweight concrete boxes equal to those manufactures by Meter Box Equipment Company may be substituted for above Fog-Tite models.

REDUCED PRESSURE BACKFLOW ASSEMBLIES
As approved on the most current Department of Health list for cross connection devices.

DOUBLE CHECK VALVE ASSEMBLIES
As approved on the most current Department of Health list for cross connection devices.

RESILIENT SEATED SHUT-OFF VALVES
All manufacturers that meet the performance requirements specified under the material section of the standards.

CONTROLLED DENSITY (FLOWABLE) FILL
Stoneway, CADMAN

RECYCLED CONCRETE (FOR USE AS CRUSHED SURFACING BASE COURSE MATERIAL
Stoneway Recycling
Renton Recycling (with certification that the material is free of contaminants)

NEOPRENE FOAM PAD (FOR CUSHION BETWEEN ADJACENT PIPES)
DOW Plastics Ethafoam™ 220

NOTES

NOTES