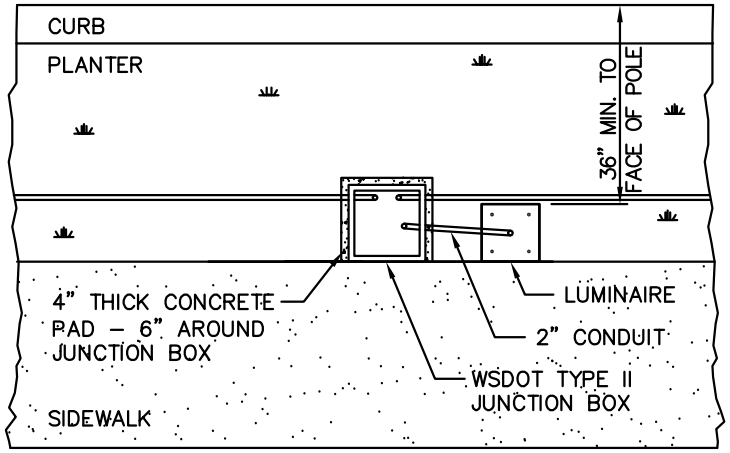

SIDEWALK WITH PLANTER STRIP

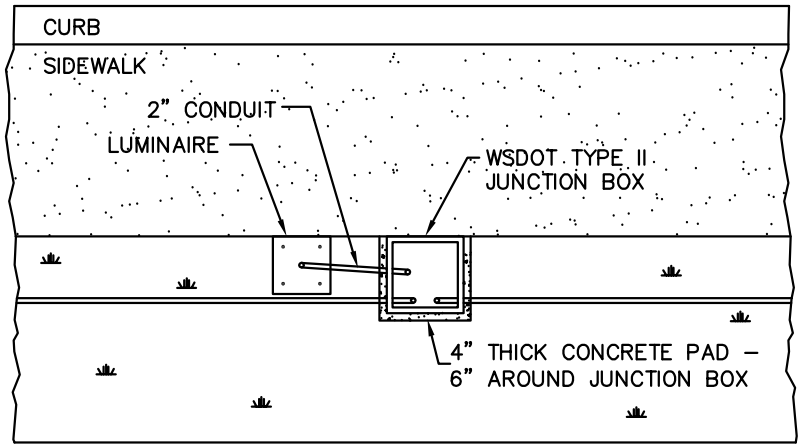

SIDEWALK WITH PLANTER BEHIND

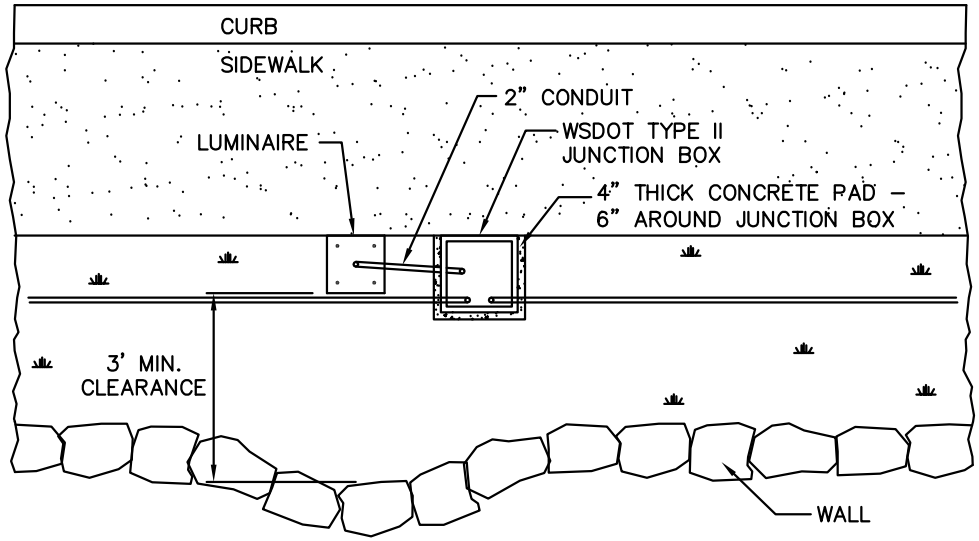

SIDEWALK WITH VERTICAL WALL

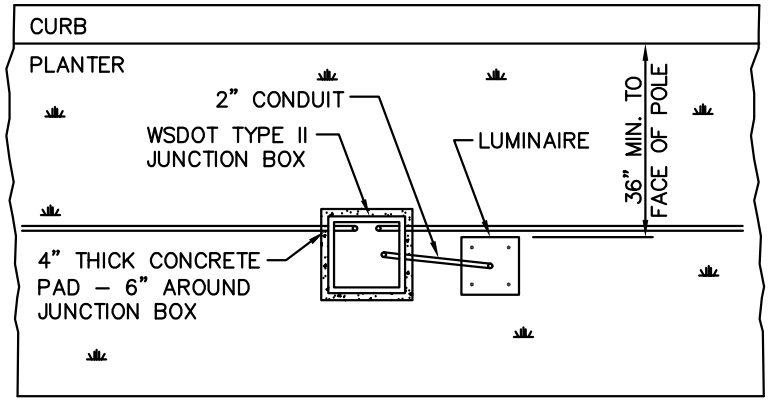

NO SIDEWALK

NOTE:

1. MUST MAINTAIN 3' MINIMUM CLEARANCE FROM POLE HANDHOLE TO ANY OBSTRUCTION.

City of Bellevue

TYPICAL LUMINAIRE LOCATIONS

DRAWING NUMBER	TSSL-3
SCALE	NONE
REVISION DATE	01/15
DEPARTMENT	TRANS