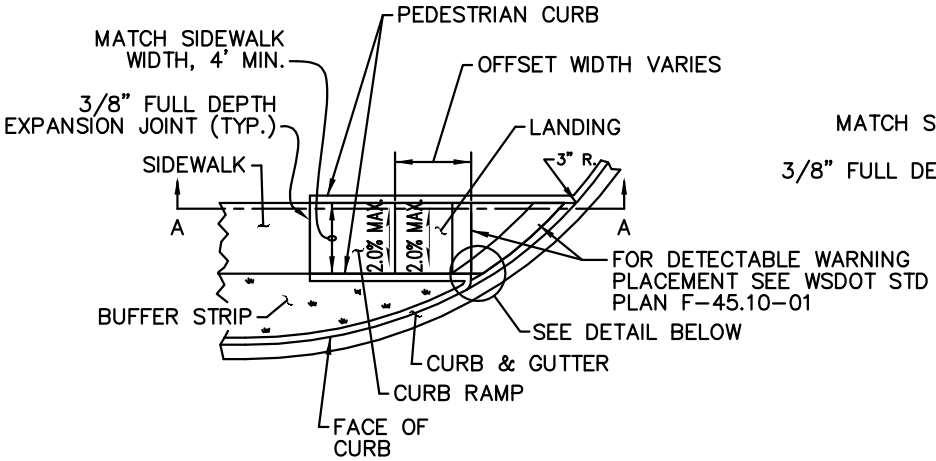

CURB RAMP TYPE 3A

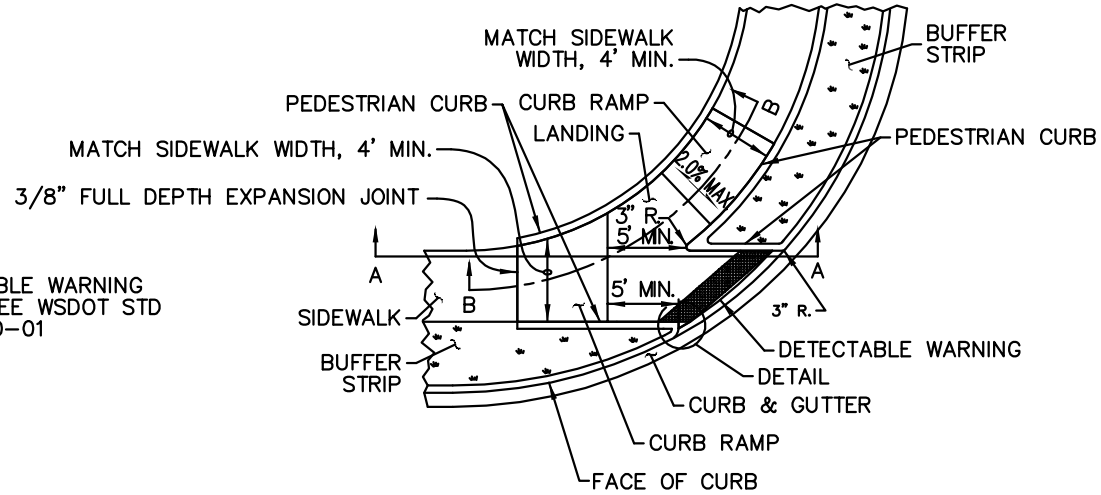

CURB RAMP TYPE 3B

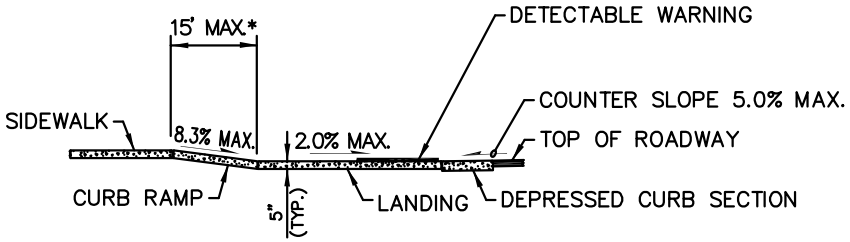

SECTION A–A

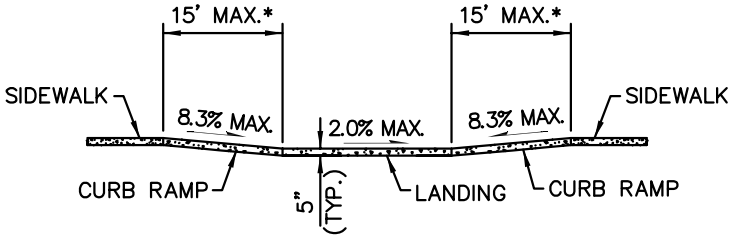

SECTION B–B

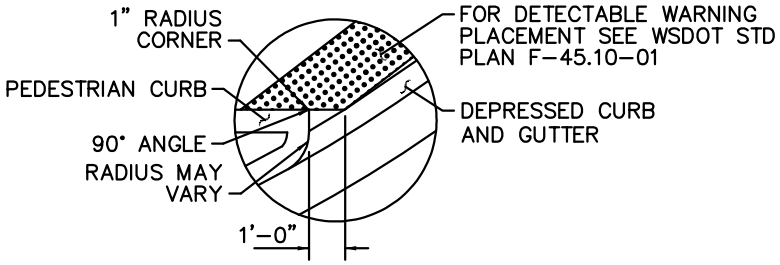

DETAIL

*RUNNING SLOPE OF THE CURB RAMP SHALL BE 8.3% MAXIMUM BUT SHALL NOT REQUIRE THE RAMP LENGTH TO EXCEED 15FT AS MEASURED RADIALLY AT BACK OF RAMP.

NOTE: SEE TE-12A FOR CURB RAMP CONSTRUCTION NOTES

LEGEND

SLOPE IN EITHER DIRECTION

PAY LIMIT (CITY-FUNDED PROJECTS)

City of Bellevue

DIRECTIONAL CEMENT CONCRETE CURB RAMP (TYPE 3)

DRAWING NUMBER	TE-12D
SCALE	NONE
REVISION DATE	03/15
DEPARTMENT	TRANS