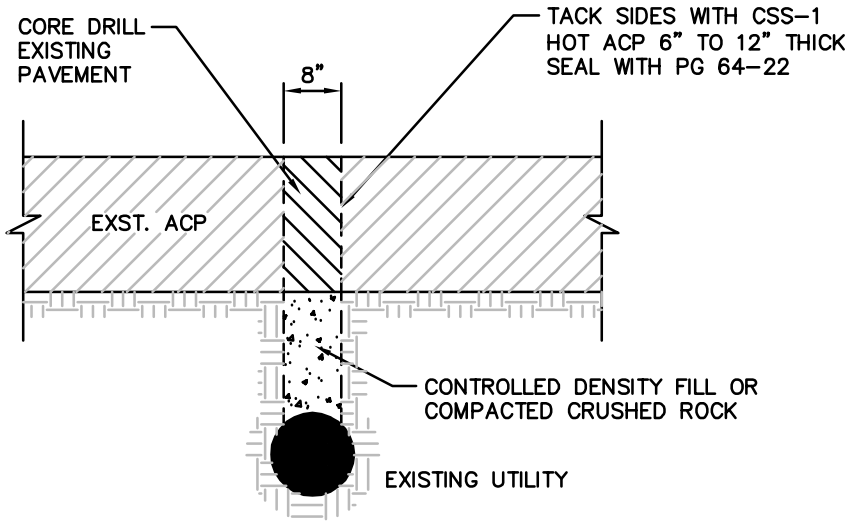

ALTERNATE REPAIR

WHEN REQUIRED BY ENGINEER

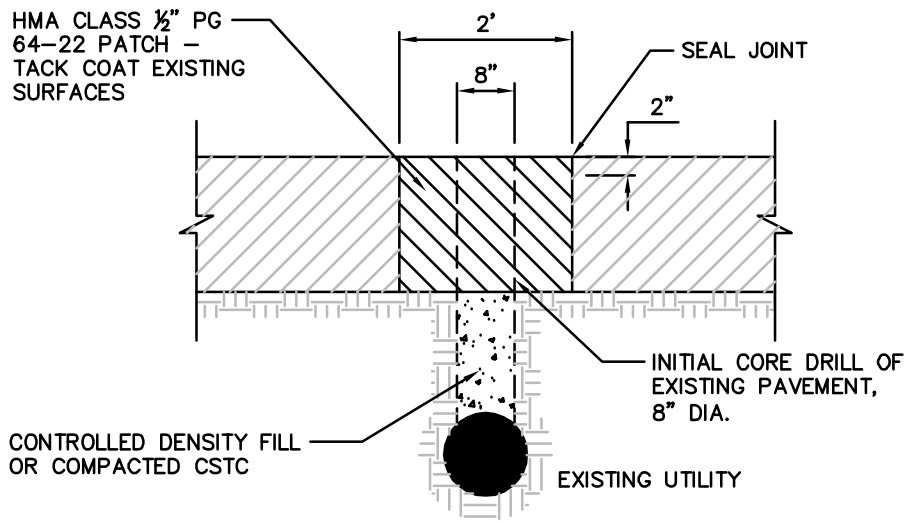

NOTES:

1. TO BE USED FOR NO-CUT AND GRIND & OVERLAY STREET RESTORATION CLASSIFICATIONS
2. THE EXISTING PAVEMENT SHALL BE CUT FULL DEPTH WITH AN EIGHT INCH DIAMETER CORE DRILL. THE SUBBASE MATERIAL SHALL BE REMOVED USING A VACUUM EXCAVATOR, KEEPING THE EXCAVATION AS MINIMAL AS POSSIBLE.
3. BACKFILL THE EXCAVATION WITH A SIX INCH CUSHION OF CRUSHED ROCK OVER THE UTILITY THEN PLACE THE REMAINING VOID WITH CDF OR COMPACTED CSTC.
4. REPAIR THE CORED PAVEMENT SECTION WITH HMA CLASS ½" PG 64-22 AND SEAL THE JOINT.
5. IF THE EXCAVATION BELOW THE ASPHALT PAVEMENT IS LARGER THAN THE 8 INCH CORE, THE PAVEMENT RESTORATION WILL INCLUDE A 2' BY 2' TEE PATCH FULL DEPTH OF THE ASPHALT CENTERED ON THE EXCAVATION, AS SHOWN ABOVE AS ALTERNATE REPAIR.
6. IF THE EXCAVATION IS LARGER THAN 2' BY 2', THE STANDARD GRIND AND OVERLAY RESTORATION SHALL BE USED.

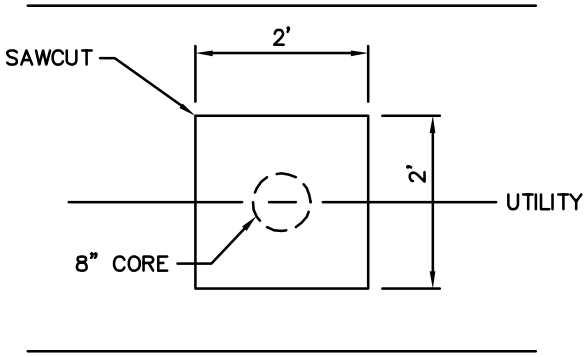

City of Bellevue

PAVEMENT RESTORATION FOR WINDOW CUTS

DRAWING NUMBER	ROW-7
SCALE	NONE
REVISION DATE	01/14
DEPARTMENT	TRANS