BELLEVUE RECORDS MANAGEMENT

## CONTRACT FACE SHEET

**Document Type:**

- ☐ Contract
- ☐ MOU
- ☒ Interlocal Agreement
- ☐ Notice of Acceptance
- ☐ Retainage
- ☐ Franchise Agreement
- ☐ Right of Way Use Agreement
- ☐ Lien
- ☐ Correspondence
- ☐ Collective Bargaining Agreement

**Status:**

- ☒ mou
- ☐ Amendment
- ☐ Change Order
- ☐ Renewal
- ☐ Cancellation

***Vendor Name:** NORCOM

***JDE PO Number:** 910661-000

***Effective Date:** 06/15/2009

***Termination Date:** 06/14/2016

**Amendment Effective Date:** /

***Clerk's Receiving Number:** 44612

**Related Receiving Number:** /

**Bid/RFP/RFQ/ITQ Number:** /

**Ordinance Number:** /

**Resolution Number:** /

**CIP Number:** /

**Project Name:** Network Interoperability Agreement - NORCOM

**Site Name:** /

**Vendor Number:** 104754

**File Location:** 09.493

*Denotes mandatory fields. If referring to Retainage, please indicate the Termination Date same as the Contract Termination Date.

IT

Face Sheet Date: 07.01.2009 JDE MT

Scan/Index Date: 7-2-09 MT ECM MT

CR# 44612 DATE 07.01.09 Loc 09.943

# NETWORK INTEROPERABILITY AGREEMENT

This Agreement is made and entered into between North East King County Regional Public Safety Communications Agency, a Washington not for profit corporation and instrumentality of its member governments "NORCOM", and the City of Bellevue, a municipal corporation of the State of Washington, "Bellevue", collectively known as "the Parties" or individually as the "Party".

WHEREAS, Bellevue is a Participating Agency of NORCOM which was created on November 1, 2007, through the NORCOM Interlocal Agreement ("NORCOM ILA"); and

WHEREAS, prior to the formation of NORCOM, Bellevue operated its own public safety technology systems and provided public safety services to other jurisdictions that are now NORCOM Participating Agencies; and

WHEREAS, NORCOM is responsible for providing Emergency Service Communications to Bellevue and other NORCOM Participating Agencies; and

WHEREAS, NORCOM is implementing an integrated technology system for computer aided dispatch, mobile messaging and field reporting, police records management, fire records management, and other applications in order to provide Emergency Service Communications; and

WHEREAS, NORCOM will utilize Bellevue's public safety technology systems to serve NORCOM Participating Agencies until NORCOM replaces the systems with an integrated technology system; and

WHEREAS, in order for each Party to utilize the public safety technology systems of the other Party, it is necessary for the Parties to share network access, equipment and protocols; and

WHEREAS, when NORCOM's integrated technology system is operational, it will be utilized by and serve Bellevue; and

WHEREAS, the Parties must agree on a high level design that specifies in general terms the connectivity components of the integrated technology system and its internal and external interactions; and

WHEREAS, the Parties desire to enter into an agreement for the purpose of ensuring that the required services continue to be provided; and

WHEREAS, the Parties desire to protect the confidentiality, integrity, security and availability of their data; and

WHEREAS, the Parties agree to cooperate in all practical and reasonable ways to enhance operations, minimize costs, and efficiently use the systems;

**NOW, THEREFORE**, in consideration of the promises, the mutual covenants, terms and conditions herein contained, the Parties covenant and agree as follows.

## Purpose of the Agreement

This Agreement between Bellevue and NORCOM expresses an understanding of the terms, conditions, and responsibilities of the Parties for network interoperability which will allow systems and users served by one Party's network to access systems served by the other Party's network.

## Definitions

***Network Interoperability*** – The network equipment and protocols that provide a method of transferring information from one Party to the other Party.

***Architecture*** – A high level design that specifies in general terms the components of a system and its internal and external interactions.

***Domain*** – A specific defined part of a system that is operated and controlled by one of the Parties. The terms "Domain Name" and "Domain Name System," which are commonly used to refer to elements of the internet and associated network, shall not have the same meaning as the term "Domain" when used in this Agreement.

***Emergency Service Communications*** – Those services defined in Section 4 of the NORCOM ILA.

***Interoperability Architecture Plan*** – Exhibit A to this Agreement.

***Participating Agency or Agencies*** – All Principals and Subscribers of NORCOM, as defined in the NORCOM ILA.

***Party Representative or Representative*** – The Party Representative for Bellevue shall be the Chief Information Officer, or designee, and the Party Representative for NORCOM shall be the Technology Manager, or designee. If a position changes in title, the position with the duties and responsibility substantially similar to the former position shall be the Party Representative.

## Scope of Agreement – Transition of Systems

In accordance with this Agreement, Bellevue authorizes NORCOM to utilize Bellevue's public safety technology systems serving NORCOM Participating Agencies until NORCOM commences operation of an integrated technology system for computer aided dispatch, mobile messaging and field reporting, police records management, fire records management, and other applications to provide Emergency Services Communications ("integrated technology system"). The Party Representatives shall agree upon a transition date. After transition, NORCOM authorizes Bellevue to use NORCOM's integrated technology system in accordance with this Agreement.

In order to implement Network Interoperability, the Parties, acting through their Party Representatives, shall create a Network Interoperability plan detailing the equipment, architecture and any other requirements for interoperability of the systems and access to the systems by the Parties.

## Architecture

The Parties have agreed to a logical Interoperability Architecture Plan ("IAP") as set forth in Attachment A to this Agreement. The IAP includes but is not limited to equipment, internet protocol address ranges, virtual local area networks and encryption methods. The Party Representatives may amend the IAP by mutual agreement through e-mail, without formal amendment of this Agreement. Each page of an amendment of the IAP shall include the date of the amendment and the date of the adoption of the previous IAP.

## Security

The Parties shall comply with the following security requirements:

1. Security, administration, operation and support of operating systems, software applications and computer and network system hardware shall be the responsibility of the Party owning or licensing the software or hardware.
2. The Party owning or licensing an application shall be responsible for providing authorization for use by the other Party and for providing and controlling access to users authorized by the requesting Party.
3. Each Party shall be responsible for the data and business process security and integrity of its Domain and all connections to its Domain.
4. Each Party shall be responsible for its network utilization, management controls and education of its users concerning security and usage policies.
5. Each Party shall ensure the physical security of its systems, servers, workstations, mobile data computers, and networking equipment. Only persons with a legitimate business need should be allowed physical access to this equipment.
6. Each Party shall ensure that all equipment attached to its networks, including servers, workstations, mobile data terminals, and networking equipment, are properly and promptly updated with the most current patching programs that are applicable to the operating systems and applications, and that virus protection is in place with regular updates of pattern definition files and periodic regular updates of software upgrades. The Party Representatives shall develop and implement a patching program plan to maintain and ensure the highest level of security, integrity and operability of their respective systems and networks.
7. The Parties shall allow access to the systems, including but not limited to equipment, software, applications, data, servers and work stations, only by persons who have been approved for access by the Party Representatives, pursuant to criminal background check and other requirements that are agreed to by the Party Representatives and that are consistent with the terms and conditions of other agreements between the Parties.

## Administration

1. Each Party shall be responsible for designing and administering its Domain.
2. All property acquired by or owned by a Party, or any license or other costs required to implement the requirements of this Agreement, shall remain the property of that Party. Unless otherwise designated, each Party shall own and maintain its own equipment. No use by one Party of the other Party's systems shall create or vest in the using Party any ownership or property rights of any nature in the systems being used.
3. Contacts for administration of this agreement:

| | | |
|---|---|---|
| Bellevue | | |
| Primary | Network Supervisor<br>*Jim Rawley* | 425-452-7197<br>jrawley@bellevuewa.gov |
| Secondary | Chief Information Security Officer<br>*Gary Clesson* | 425-452-6899<br>gclesson@bellevuewa.gov |
| NORCOM | | |
| Primary | Technology Manager<br>*Mark Nelson* | 425-576-5675<br>mnelson@norcom.org |
| Secondary | Member of Technical Staff<br>*Karen Furuya* | 425-830-3797<br>kfuruya@norcom.org |

If the Party Representatives are unable to resolve an issue or matter arising under this Agreement, the Party Representatives may refer the issue or matter to the following officers of the Parties for resolution:

Bellevue

Chief Technology Officer *Chelo Picardal*
Phone 425-452-6106
e-mail cpicardal@bellevuewa.gov

NORCOM

Executive Director *Chris Fischer*
Phone 425-587-3495
e-mail cfischer@norcom.org

## General Agreement Provisions

FORCE MAJEURE: Neither Party shall be deemed in default or otherwise obligated under this Agreement due to its inability to perform its obligations by reason of any fire, earthquake, flood, substantial snowstorm, epidemic, accident, explosion, casualty, strike, lockout, labor controversy, riot, civil disturbance, act of public enemy, embargo, war, act of God, or any municipal, county, state or national ordinance or law, or any

executive, administrative or judicial order (which order is not the result of any act or omission which would constitute a default hereunder), or any failure or delay of any transportation, power, or communications system or any other or similar cause beyond that Party's reasonable control.

INDEMNIFICATION: Each Party shall protect, defend, indemnify and save harmless the other Party, its officers, employees and agents from any and all costs, claims, judgments or award of damages, arising out of or in any way resulting from the negligent acts or omissions of the indemnifying Party, its officers, employees and agents in performing its obligations hereunder.

NOTIFICATIONS:
Written notice to Bellevue shall be made to:

Chief Information Officer
Information Technology Department
City of Bellevue
PO Box 90012
Bellevue, WA 98009-9012

Written notice to NORCOM shall be made to:

Technology Manager
NORCOM
PO Box 50911
Bellevue, WA 98015-0911

AGREEMENT INTEGRATION; COUNTERPARTS; AMENDMENTS; SEVERABILITY; ASSIGNMENT: This Agreement constitutes the final and completely integrated agreement between Parties concerning its subject matter and it may be signed in counterparts without affecting the validity of this provision. Except as provided in this Agreement for modifications by the Party Representatives, no modification of this Agreement is valid unless approved and signed by the authorized representatives of both Parties. Should any provision of this Agreement be deemed invalid, the remaining provisions shall remain in full force and effect. A Party shall not assign, transfer or sublicense its rights and obligations under this Agreement without the prior written consent of the other Party.

EFFECTIVE DATE: This Agreement will become effective on the last date signed by the Parties as evidenced below.

TERM; TERMINATION: Either Party may terminate this agreement upon 90 days written notice. The term of this Agreement shall be 7 years from the effective date unless terminated sooner as provided herein. This Agreement may be renewed by the Parties by a writing executed prior to the termination date.

CONFIDENTIALITY: Each Party agrees to hold in confidence to the extent permissible by law, and not communicate, transmit, publish, disseminate or otherwise disclose any of the any information received as a result of having entered into this Agreement (collectively, "Confidential Information"); provided, that nothing in this paragraph shall prohibit disclosure of such Confidential Information: (a) by each Party to its respective employees or agents as may be reasonably necessary in the operation of its business; (b) in connection with any legal or governmental proceeding; or (c) to any judicial, governmental or regulatory body as required to be disclosed pursuant to any statute or regulation.

**City of Bellevue**

By: _____

Name: RICK BERMAN

Its: COO

Date: 6/26/09

**NORCOM**

By: _____

Name: Chris Fischer

Its: Executive Director

Date: 6-15-09

Approved as to form:

_____
Jerome Roache (date)

Approved as to form:

_____ 6/16/09
Rod Kaseguma (date)

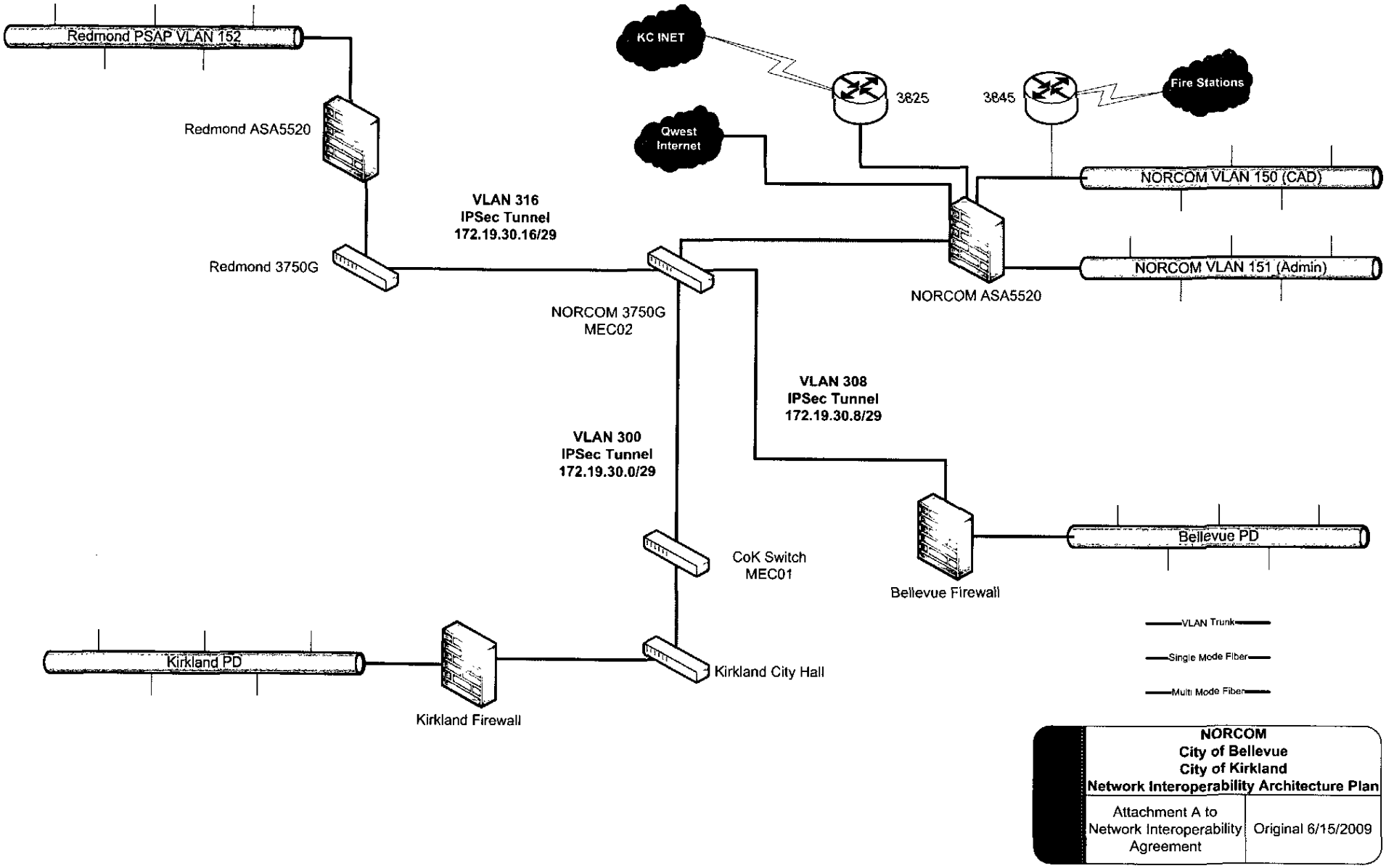


**NORCOM**
**City of Bellevue**
**City of Kirkland**
**Network Interoperability Architecture Plan**

| | |
|---|---|
| Attachment A to Network Interoperability Agreement | Original 6/15/2009 |

CR# 44612 Date: 07/01/09 Loc: 09.943 ) #: 910661-000

City of Bellevue
Finance Department - Contracting Services
450 110th Ave. NE. Bellevue, WA 98004

# Contract Routing Form

## Current Contract Information:

**Contract Title:**
Network Interoperability Agreement - NORCOM

**Contract Description:**
Network Interoperability Agreementw between Bellevue and NORCOM

**Total Contract Value:**

**This Amendment Value:** N/A

**Department:** Information Technology - 558

**Contract Manager:** Chelo Picardal

**Contract Type:** Memo of Understanding (MOU)

**Contract Form:**
Custom contract document

**Budget Expenditure:**
No Budget Impact (Explain in Additional Comments)

## Vendor Information:

**Is this a new vendor?** No

**Vendor Name:** NORCOM

**JDE Vendor Number:** 104754

**Is this vendor an independent contractor?** Yes

**Tax ID #:** 261506994

**COB License #:** N/A

**UBI #:** N/A

**Contractor's License #:** N/A

## Contract Terms:

**Original Effective Date:** 06/15/2009 **End Date:** 06/14/2016 **Subject To:** Three 1-year renewals

## Related Contract Information:

**Is this an amendment/change order/renewal?** No

## Council Approval:

**Does this contract require council approval?** No

## Route:

| | | In | Out |
|---|---|---|---|
| Contracting Services: | John Li | 6/17/09 | 6/24/09 |
| Information Technology: | Chelo Picardal | 6/17/09 | 6/17/09 |
| Legal: | Jeanne Kouchi | 6/25 | |
| Insurance Reviewed By: | Joanne Nicolai | 6/24/09 | 6/25/09 - No insur required under proposed agreement. |
| Department Director: | [signature] | 6/30/09 | 6/30/09 |
| Contracting Services: | John Li | 6/30/09 | 7/01/09 |
| Return To: | Chelo Picardal | | |
| City Clerk's Office: | Changen | 07-01-09 | 07-01-09 |