City of Bellevue

Transportation Commission Workshop

DATE: September 15, 2016

TO: Chair Zahn and Members of the Transportation Commission

FROM: Kevin McDonald, AICP, Senior Transportation Planner, 425-452-4558
Kmcdonald@Bellevuewa.gov

SUBJECT: Level-of-Service in Bellevue – Toward a Multimodal Approach to Mobility

DIRECTION REQUESTED

	Action
X	**Discussion (Confirm staff recommended metrics and standards for each mode)**
X	Information

At the Multimodal Level-of-Service (MMLOS) workshop on September 22, we will dive as deeply as we need to into the staff recommendation for each mode. Concurrence on modal metrics and standards will set the stage for the discussion on how the facilities for each mode overlap on corridors and intersections – integrating the intent of Vision Zero and Complete Streets to have a safe and equitable transportation system.

Ultimately –before the end of 2016 or in early 2017 - staff will seek a Commission recommendation to the City Council for multimodal metrics and standards to amend the Transportation Element of the Comprehensive Plan and the Traffic Standards Code, BCC 14.10.030.

BACKGROUND

Please refer to the March 10, 2016 study session agenda memo, and the presentation, for extensive background information. The memo refers to existing policy support for multimodal level of service and provides preliminary staff recommendations on metrics for each mode.

INFORMATION

With the above background as context, the folowing section documents the Transportation Commission input during the March 10, 2016 study session

March 10, 2016 Recap

This study session discussion with the Transportation Commission focused on the metrics to use for each mode, how those metrics would be evaluated, how well they describe the quality of the transportation system for the user of each mode, and how they would be used to identify/prioritize transportation system improvements. Also discussed was method for setting LOS standards for long-range planning. Minutes of the March 10, 2016 study session provide the full context of the presentation and discussion.

A summary of the discussion on LOS metrics and Transportation Commission input is as follows:

- Vehicle mode – Retain existing LOS metrics and standards, review MMA geography, potentially develop different categories than the current LOS A-F.
- Pedestrian mode – Focus on the quality of the pedestrian environment rather on a congestion metric similar to vehicle level-of-service. Apply metrics and standards to the "pedestrian network" on arterials as identified in the Pedestrian and Bicycle Transportation Plan (2009). LOS standard should be based on the context, for example, people in Downtown or near a neighborhood shopping center may have an expectation for a higher quality pedestrian environment than along an arterial with no specific pedestrian destinations. Utilization is a good performance metric, but not a standard.
- Bicycle mode – Account for vehicle volume and speed in the bicycle LOS metrics and the level-of-service standards for different types of bicycle facilities adjacent to vehicle travel lanes. Level-of-service can be based on the type of facility and the quality of the user experience it provides. Factors that are not controlled such as topography can be addressed in the type of facility provided – ie) climbing bicycle lane and downhill sharrow. Apply metrics and standards to the arterial "bicycle network" as identified in the Pedestrian and Bicycle Transportation Plan (2009), or as modified through the Pedestrian and Bicycle Implementation Initiative. Utilization/ridership is a good performance metric, but bicycle rider safety and comfort are the standards that should determine the type of facility.
- Transit mode – Establish metrics and standards for components of transit service over which the City has control, such as transit rider access, transit stop/station components, and some speed and reliability factors, as identified in the Transit Master Plan and the

Downtown Transportation Plan. Acknowledge that there is no direct quantitative relationship between high quality components of transit access and transit ridership – ridership is an outcome - however it is recognized that good transit access tends to help make transit an equitable and attractive option for necessity riders and choice riders.

PRELIMINARY STAFF RECOMMENDATION

This section presents an overview of preliminary staff recommendations for MMLOS metrics and standards for the Commission's consideration. Staff will provide more details for discussion on September 22. In summary, staff recommends the following LOS metrics and standards:

Vehicle LOS

Staff recommends retaining the existing metrics and level-of-service standards that are adopted and documented in the Comprehensive Plan and the Traffic Standards Code, BCC 14.10.030. For Concurrency purposes, the existing metric is the average volume/capacity ratio at system intersections, distributed across the city in 14 Mobility Management Areas (MMAs). For long-range planning, Bellevue uses average delay at the same system intersections. Note that MMA 14 (Newport Hills) has no system intersections and no level-of-service standard. The LOS standard varies between MMAs depending on such factors as land use intensity, neighborhood character, and available transit options. The LOS standard average v/c ranges from 0.95 in Downtown, Factoria, and BelRed where land use is mixed and intense and mobility options are plentiful, to 0.80 in lower-density residential areas that are not as well served by transit and where separated land uses may disfavor walking or bicycling for many trips.

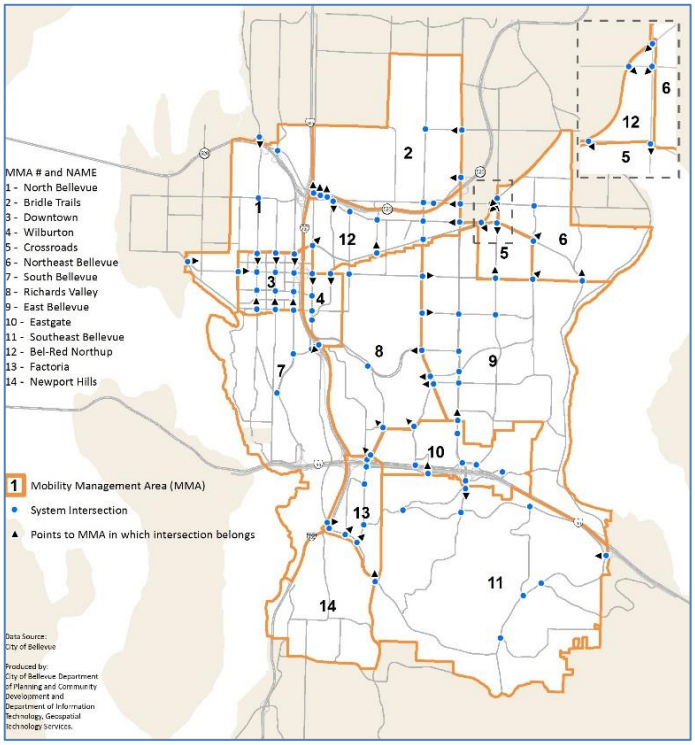

Figure 1. MMA Boundaries and System Intersections

The existing MMA boundaries and system intersections have been slightly modified over the years - most recently as recommended by the Transportation Commission in the 2015 Comprehensive Plan Update - to reflect land use changes and infrastructure investments. In a subsequent phase of this MMLOS project, staff and the Commission will examine the existing MMA boundaries and may recommend modifications that would better reflect existing and planned land use, travel demand and mobility options along corridors.

Pedestrian LOS

Dimensional standards for sidewalks and landscape buffers are adopted in the Land Use Code and in the Transportation Design Manual. With the exceptions of Downtown and BelRed where sidewalk and landscape buffer dimensions are specified by Code, these dimensional standards are applied to arterial streets generally across the city without regard to the neighborhood context.

Out of the community engagement process for the 2015 Update of the Comprehensive Plan, and through discussions with the boards and commissions, emerged the policy related to multimodal level-of-service. The community recognized that the existing generic approach did not meet the needs and expectations of people walking (and bicycling) in the wide range of neighborhood types and land uses in the city. The frequently mentioned example of a roadway corridor that traverses many types of neighborhoods is Bellevue Way, where the standard arterial sidewalk dimension outside of Downtown (six to eight feet, as determined by the Review Engineer) as well as street crossing opportunities (standard dimensions and accessibility) do not adequately serve locations such as the Northtowne Shopping Center where a higher quality pedestrian environment is expected.

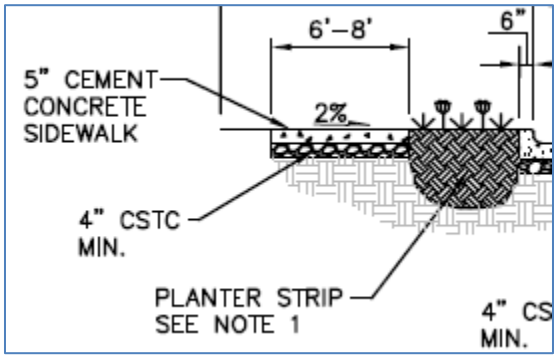

Figure 2.
Standard Sidewalk and Landscape Dimensions

Recommended pedestrian LOS metrics are based in large part on the qualitative experience of the person walking, the fundamental expectations of that person for safety and comfort, with design informed by the neighborhood and land use context. Citywide standards for arterial streets would continue to apply, except where the Land Use Code provides specific standards, and where, according to Table 1 below, adjacent land use intensity and activity demand either wider sidewalks, a wider landscape buffer, or both, plus enhanced opportunities to cross the street at intersections and mid-block locations.

For purposes of describing the land use context, an Activity Center includes BelRed, Crossroads, Factoria, Wilburton and Eastgate. A Neighborhood Shopping Centers is a location such as Northtowne, Lake Hills, Newport Hills, and other similar centers throughout the city that occupy land that is typically zoned Neighborhood Business. A Pedestrian Destination is a facility or location such as a school, park, community center, library, frequent transit network stop, or a trail crossing. Elsewhere in the city that is not one of the preceding land use types, the citywide standards would continue to apply.

Staff recommends Pedestrian LOS metrics and standards as follows in Table 1:

Table 1. Pedestrian Level-of-Service

Context: / Component	Downtown	Activity Centers	Neighborhood Shopping Center	Pedestrian Destinations	Elsewhere
Sidewalk and Buffer Width	Meets Downtown Land Use Code	Meet Land Use Code* or 16 feet for designated arterials in activity center.	13 feet adjacent to shopping center	13 feet adjacent to pedestrian destination or within 100 feet of a FTN stop	No Change: Meet Design Manual (6-8 foot sidewalk and 4 foot buffer = 10-12 feet)
Arterial Crossing Frequency**	≤ 300 feet	≤ 800 feet: Factoria ≤600 feet: Elsewhere	At least one crossing every 600 feet or less within shopping center area	Within 600 feet of destination. Within 300 feet of bus stop pair on FTN.	Not Applicable
Signalized Intersection Treatment	Meets DTP*** Designation	Meets Land Use Code* or DTP*** Enhanced	Per Design Manual	Per Design Manual	Per Design Manual

* Meets BelRed Land Use Code in BelRed Subarea
** Must be an appropriate marked and potentially signalized crossing as determined by the Transportation Department.
*** Downtown Transportation Plan

Bicycle LOS

Similar to the factors that provide for a safe and comfortable walking environment in various settings, recommended bicycle metrics and standards would focus on the rider experience, not the number of riders who use a facility. This is an emerging best practice for cities that intend to enrich the bicycling environment, based on the experience in Portland, OR, Davis, CA, and many European cities where implementation of high-quality facilities leads to safer bicycling and the outcome of higher bicycle use. The quality of the experience for a person riding a bicycle is largely determined by the speed and volume of traffic on the street, coupled with the type of bicycle facility. For the purpose of this MMLOS work, an off-street path such as, the I-90 Trail and SR 520 Trail, is considered to always meet expectations for level-of-service. A physically separated bikeway that part of the defined bicycle network and is immediately adjacent to an arterial street is included in the evaluation – for instance, the multipurpose path adjacent to NE 12th Street.

- **Introducing Bicycle Level of Traffic Stress (LTS)**

  From the 2012 Mineta Transportation Institute Technical Report, *Low-Stress Bicycling and Network Connectivity*, authors Maaza C. Mekuria, Ph.D., P.E., PTOE, Peter G. Furth, Ph.D., and Hilary Nixon, Ph.D. propose the following:

  > "For a bicycling network to attract the widest possible segment of the population, its most fundamental attribute should be low-stress connectivity, that is, providing routes between people's origins and destinations that do not require cyclists to use links that exceed their tolerance for traffic stress, and that do not involve an undue level of detour. The objective of this study is to develop measures of low-stress connectivity that

can be used to evaluate and guide bicycle network planning. We propose a set of criteria by which road segments can be classified into four levels of traffic stress (LTS). LTS 1 is suitable for children; LTS 2, based on Dutch bikeway design criteria, represents the traffic stress that most adults will tolerate; LTS 3 and 4 represent greater levels of stress."

The concept is to identify the type of bicycle facility that will provide a level of separation and protection from traffic of a known or anticipated speed and volume that is expected by the mainstream, traffic-intolerant bicycle-riding population. Note that the segment of the population that is not inclined to ride a bicycle under any circumstances – the "No Way-No How" category of individuals - are not factored in this calculation. The authors' research proposes a system to classify road segments into four "levels of traffic stress" (LTS), as shown below, adapted by staff for Bellevue in the graphic that follows:

- **LTS 1** is meant to be a level that most children can tolerate;
- **LTS 2**, the level that will be tolerated by the mainstream adult population;
- **LTS 3**, the level tolerated by American cyclists who are "enthused and confident" but still prefer having their own dedicated space for riding; and
- **LTS 4**, a level tolerated only by those characterized as "strong and fearless."

Adapted for Bellevue, staff recommends LTS categories as follows in Figure 3:

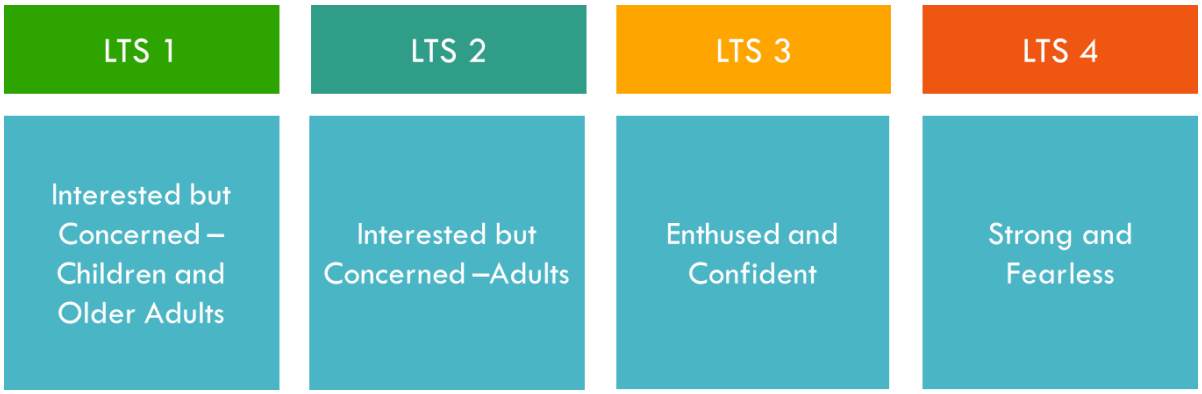

Figure 3. Level of Traffic Stress

According to Furth, et, al., in this classification methodology, level-of-traffic-stress along road segments is classified based on traffic characteristics such as traffic speed and volume and the type of bicycle facility that is present; for instance, a sharrow, a striped bike lane, or a physically separated bikeway. A low level-of-traffic-stress (LTS 1) can be achieved on a street with low traffic speed and volume with minor improvements to bicycle facilities. As the traffic speed and traffic volume increase, to provide a low level-of-traffic-stress requires progressively more protective measures such as striped, buffered or protected bike lanes. For any roadway type, a nearby physically separated bikeway would yield a LTS 1.

Conversely, a roadway with progressively higher traffic speed and/or volume will yield increasingly higher level-of-traffic-stress if the type of bicycle facility remains constant.

Providing additional foundation for this methodology is the Washington State Department of Transportation *Design Manual Chapter 1520 – Roadway Bicycle Facilities* that describes the three general types of bicyclists:

- *Strong and Fearless* –Confident in their abilities as a cyclist and also with their ability to operate intermixed with other modal users.
- *Enthused and Confident* – Comfortable riding intermixed within other modes in some transportation contexts, but these cyclists prefer utilizing separated facilities.
- *Interested, but Concerned* –Primarily have safety concerns and are less skilled or less familiar with the rules of the road, but would like to ride more. These cyclists are frequently dissuaded from cycling, even if bike facilities are present, where little or no separation exists between themselves and motor vehicle traffic. This category includes children and others new to bicycling.

To provide guidance for the type of bicycle facility that would be appropriate, WSDOT developed a series of graphs that relate traffic speed and volume to the type of bicycle facility that would be needed to meet the expectations of various types of bicycle riders. Figure 4 shows the Interested but Concerned bicyclist with a low degree of tolerance for traffic speed (X axis) and traffic volume (y axis). As traffic volume and traffic speed increase, more separation is needed.

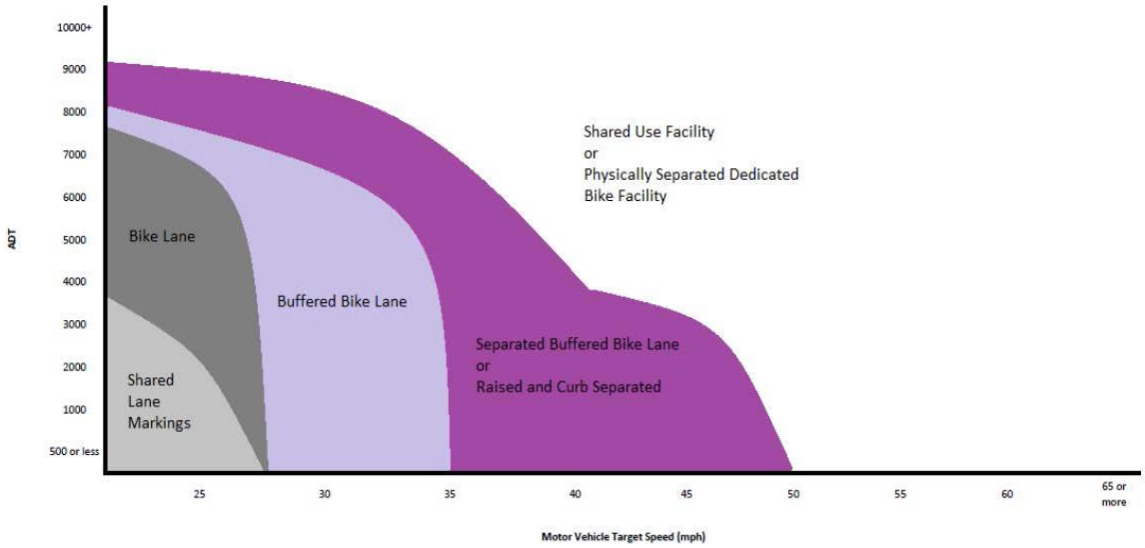

Figure 4. Exhibit 1520-6a Bicycle Facility Selection Chart – Interested, but Concerned Cyclists

In Figure 5, the Confident bicyclist is shown to be tolerant of higher traffic volume and speed with less physical separation. Both figures show that an off-street facility such as a Shared Use Path is needed in urban areas for all types of bicyclists when traffic volume and speed are excessive.

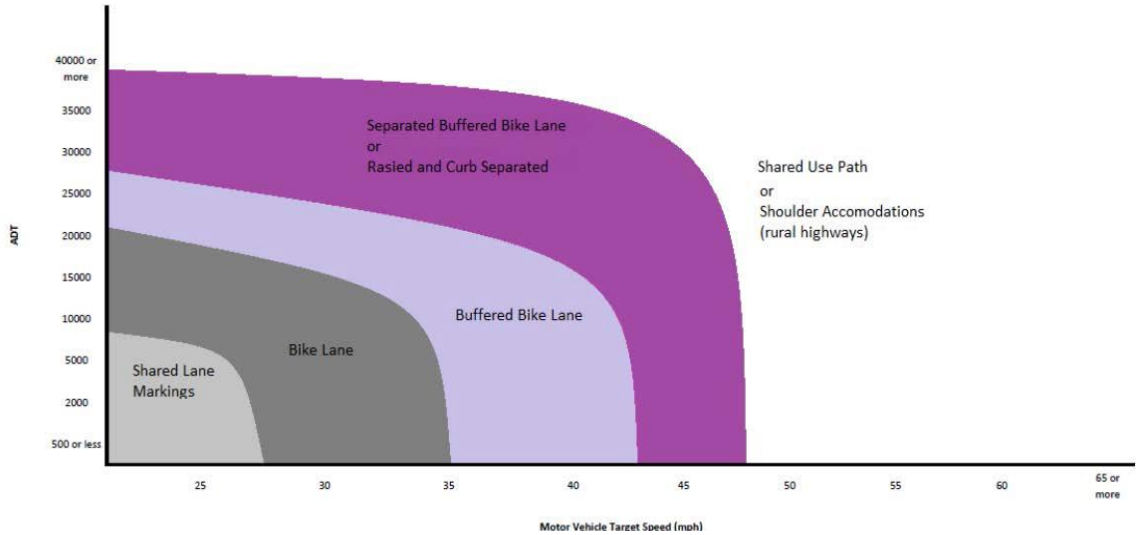

Figure 5. Exhibit 1520-6b Bicycle Facility Selection Chart – Confident Cyclists

Staff recommends a system for Bicycle LOS in Bellevue that describes the type of bicycle facility that would be comfortable for various types of bicycle riders according to Table 2 below – these are the level-of-service "metrics".

Table 2. Bicycle Level-of-Service

Speed Limit (mph)	Arterial Traffic Volume	No marking	Sharrows	Striped Bike Lane	Buffered Bike Lane	Protected Bike Lane	Physically Separated Bikeway
≤25	<3k	1	1	1	1	1	1
	3-7k	3	2	2	2	1	1
	≥7k	3	3	2	2	1	1
30	<15k	4	3	2	2	1	1
	15-25k	4	4	3	3	3	1
	≥25k	4	4	3	3	3	1
35	<25k	4	4	3	3	3	1
	≥25k	4	4	4	3	3	1
40	Any volume	4	4	4	4	3	1

In terms of Bicycle LOS standards, staff recommends achieving the following:

- **LTS 1.** On Priority Bicycle Corridors within Downtown and Activity Centers. A high level of bicycle mobility for all ages and abilities is expected within areas where the City has the vision, intent and policy to promote a high-density, mixed use environment.
- **LTS 2.** On Priority Bicycle Corridors outside of Activity Centers. A moderate level of bicycle mobility for *Interested but Concerned* adults would allow comfortable bicycling connections between Activity Centers and on recognized Regional routes such as the Lake Washington Loop.
- **LTS 3.** On Other Bicycle Network Corridors – On arterial streets that are part of the Bicycle Network but not part of a Priority Bicycle Corridor.

Figure 6. Priority Bicycle Corridors

- **No LTS** Standard would apply on these Exempt Bicycle Network Corridors that, due to traffic speed and/or volume, would not be a comfortable bicycling environment for anyone. Staff recommends that no bicycle LTS standard be established for these street segments:
  - NE 8th Street east of Bellevue Way and west of 156th Avenue NE
  - Bel-Red Road between 116th Avenue NE and 156th Avenue NE
  - Bellevue Way between 112th Avenue NE (at the Y) and the interchange at SR 520

Transit LOS

A transit agency would typically measure level-of-service in terms of the things it controls that affect ridership such as frequency of the bus, the reliability of scheduled service, and the seat-to-passenger ratio. Since Bellevue leaves the provision of transit service to King County Metro, Sound Transit and Community Transit, for this purpose, staff recommends transit LOS metrics and standards that are largely within the city's control and are essential to the transit rider. These are transit passenger access and amenities, and transit coach speed along frequent transit network routes.

Components of transit passenger access and amenities are documented in both the Transit Master Plan and the Downtown Transportation Plan. Components vary generally by type,

design, quantity or quality based on the level of transit service that is provided at the following locations:

- Local Transit Stop - served by a single transit route with generally 30 or fewer boardings per weekday;
- Primary Transit Stop – served by one or more transit routes with service provided at a combined headway of 30 minutes or better;
- Frequent Transit Network/RapidRide Station – served primarily by RapidRide B and also local or regional frequent transit network routes, for example, King County Metro route #271 and #245;
- Transit Center/Multimodal Hub – served by multiple transit routes and transit modes with a constant flow of transit vehicles and passengers throughout the day.

Bellevue may provide some basic components of transit passenger access and amenities such as a bench or shelter, or may provide enhancements such as wayfinding or bicycle parking.

Staff recommends the Transit LOS standards shown in Table 3 for transit passenger access and amenities for each type of transit stop or station:

Table 3. Transit Stop/Station Level-of-Service

Context: / Component	Local Stop	Primary Stop	Frequent Transit/ RapidRide Stop	Multimodal Hub
Weather Protection*	Yes, 25+ daily boardings	Yes	Yes	Yes
Seating	Yes, near uses like retail, healthcare, or senior housing	Yes	Yes	Yes
Bicycle Parking	One short-term rack (2-4 bikes)	One short-term rack (2-4 bikes)	One short-term rack (2-4 bikes)	Two short term racks (4-8 bikes) Bike Cage or Lockers
Bike Share Station	No	No	Yes** In Activity Centers	Yes**
Wayfinding	No	Yes	Yes	Yes

Notes:
* Building mounted weather protection is preferred in areas where no building setback is required
** Bike share station to be provided if there is an active bike share program in Bellevue and based on input from the Transportation Department. If there is no active bike share program, space must be provided to accommodate bike share station. Minimum size for station is 6’x12’.

For transit coach speed, Bellevue proposes to use a metric of transit speed between defined activity centers along specified routes. Roadway conditions and traffic operations influence the speed at which buses can travel while operating in mixed traffic. The defined Activity Centers for this metric are the same as the ones that are defined for other LOS modes.

Transit speed data that is gathered by the transit agencies for coaches serving select corridors on the frequent transit network. Transit speed would be monitored to reveal trends and inform potential intervention. Intervention could be in the form of transit system signal priority investments, transit queue jump lanes, business access and transit (BAT) lanes, or other remedies and investments identified in the Transit Master Plan and the Downtown Transportation Plan. This transit speed LOS standard is based on the key routes and transit speed expectations identified in the Transit Master Plan – this standard is analogous to the Washington State Department of Transportation's goal to maintain a minimum acceptable speed on the regional HOV lane network for transit, carpools/vanpools, and other HOVs.

Staff recommends a Transit LOS standard of 14 miles-per hour between Activity Centers (this standard is derived from the Transit Master Plan) and suggests categories of "red", "yellow" and "green" to describe how the observed transit speed matches up to the standard, as shown in Table 4 below. The map in Figure 7 shows the frequent transit network between Activity Centers that is color-coded to depict transit speed per the categories in Table 4.

Table 4. Transit Speed Level-of-Service

From	To	Observed Speed (MPH) PM 2 HR Peak	Transit Speed Category		
			Red	Orange	Green
Crossroads	Downtown	**10.6**	**<10 MPH**	**10-14 MPH**	**>14 MPH**
Downtown	Crossroads	**11.2**			
Downtown	Overlake	**11.0**			
Overlake	Downtown	**10.0**			
Downtown	Factoria	**9.8**			
Factoria	Downtown	**12.9**			
Downtown	Eastgate	**10.7**			
Eastgate	Downtown	**13.5**			
Crossroads	Overlake	**10.5**			
Overlake	Crossroads	**10.5**			
Crossroads	Eastgate	**11.6**			
Eastgate	Crossroads	**9.2**			
Overlake	Eastgate	**10.9**			
Eastgate	Overlake	**9.7**			
Factoria	Eastgate	**13.6**			
Eastgate	Factoria	**13.6**			

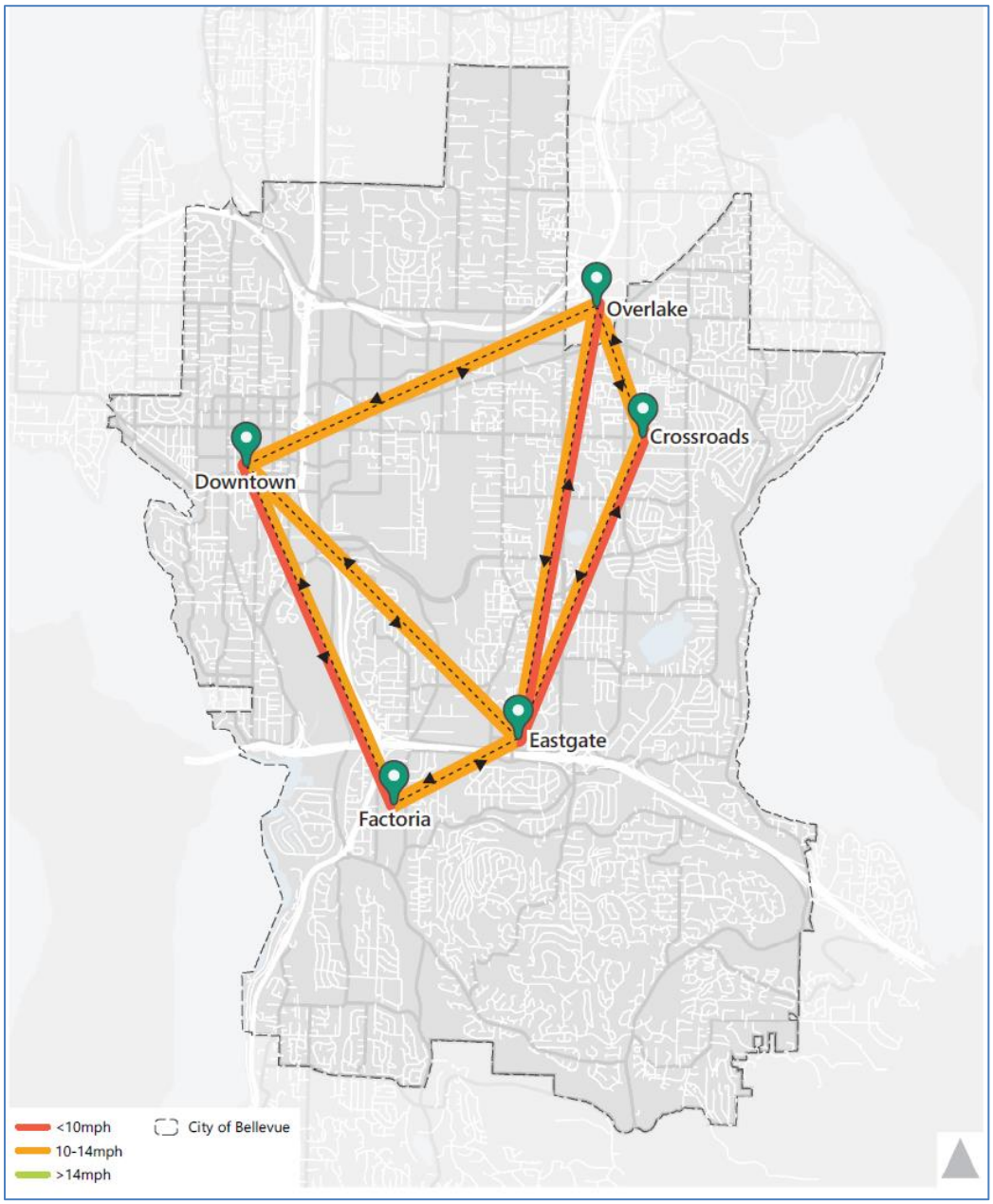

Figure 7. Transit Level-of-Service – Transit Speed Existing Conditions

NEXT STEPS

Following the September 22 MMLOS workshop, staff will use the feedback received from the Transportation Commission to refine, as necessary, the preliminary staff recommendation for modal LOS metrics and standards. A final staff recommendation for metrics and standards will be presented and discussed at a subsequent Transportation Commission meeting – probably in the Fall of 2016. This final recommendation will conclude one phase of the MMLOS workplan. The next step will be to determine how MMLOS would be implemented. We will look specifically, in a Complete Streets and Vision Zero policy framework, how to attain modal LOS standards in a geographically and fiscally constrained environment.