DEVELOPMENT SERVICES DEPARTMENT
ENVIRONMENTAL COORDINATOR
450 110th Ave NE
BELLEVUE, WA 98009-9012

DETERMINATION OF NON-SIGNIFICANCE

PROPONENT: Mark and Jennifer Spatz

LOCATION OF PROPOSAL: 5 Skagit Key

DESCRIPTION OF PROPOSAL: Request to restore an eroding stream bank along Coal Creek with a soft stabilization measure including rock, soil, and native vegetation. The proposal calls for the excavation of an area approximately 6 feet by 10 feet within the top of bank just above ordinary high water to remove the rocks and soil surrounding the cavity created by the stream erosion. The excavated area is proposed to be filled with large rocks and topsoil then covered with a geotextile fabric. Plantings will be placed along the streambank side of the stabilization.

FILE NUMBERS: 13-135274-LO **PLANNER:** Heidi M. Bedwell

The Environmental Coordinator of the City of Bellevue has determined that this proposal does not have a probable significant adverse impact upon the environment. An Environmental Impact Statement (EIS) is not required under RCW 43.21C.030(2)(C). This decision was made after the Bellevue Environmental Coordinator reviewed the completed environmental checklist and information filed with the Land Use Division of the Development Services Department. This information is available to the public on request.

☐ There is no comment period for this DNS. There is a 14-day appeal period. Only persons who submitted written comments before the DNS was issued may appeal the decision. A written appeal must be filed in the City Clerk's office by 5:00 p.m. on _____.

☒ This DNS is issued after using the optional DNS process in WAC 197-11-355. There is no further comment period on the DNS. There is a 14-day appeal period. Only persons who submitted written comments before the DNS was issued may appeal the decision. A written appeal must be filed in the City Clerk's Office by 5 p.m. on **5/1/2014**

☐ This DNS is issued under WAC 197-11-340(2) and is subject to a 14-day comment period from the date below. Comments must be submitted by 5 p.m. on _____. This DNS is also subject to appeal. A written appeal must be filed in the City Clerk's Office by 5:00 p.m. on _____.

This DNS may be withdrawn at any time if the proposal is modified so as to have significant adverse environmental impacts; if there is significant new information indicating a proposals probable significant adverse environmental impacts (unless a non-exempt license has been issued if the proposal is a private project): or if the DNS was procured by misrepresentation or lack of material disclosure.

_____ **4/16/2014**
Environmental Coordinator Date

OTHERS TO RECEIVE THIS DOCUMENT:
☒ State Department of Fish and Wildlife / Stewart.Reinbold@dfw.gov; Christa.Heller@dfw.wa.gov;
☒ State Department of Ecology, Shoreline Planner N.W. Region / Jobu461@ecy.wa.gov; sepaunit@ecy.wa.gov
☐ Army Corps of Engineers Susan.M.Powell@nws02.usace.army.mil
☐ Attorney General ecyolyef@atg.wa.gov
☒ Muckleshoot Indian Tribe Karen.Walter@muckleshoot.nsn.us; Fisheries.fileroom@muckleshoot.nsn.us

City of Bellevue
Development Services Department
Land Use Staff Report

Proposal Name:	**Spatz Streambank Stabilization**
Proposal Address:	**5 Skagit Key**
Proposal Description:	Request for a Critical Areas Land Use Permit approval to restore an eroding stream bank along Coal Creek with a soft stabilization measure including rock, soil, and native vegetation.
File Number:	**13-135274-LO**
Applicant:	Mark and Jennifer Spatz
Decisions Included:	Critical Areas Land Use Permit (Process II. LUC 20.30P)
Planner:	Heidi M. Bedwell, Planner
State Environmental Policy Act Threshold Determination:	**Determination of Non-Significance**

Carol V. Helland, Environmental Coordinator
Development Services Department

Director's Decision:	**Approval with Conditions**

Carol V. Helland, Land Use Director
Development Services Department

Application Date:	December 10, 2013
Notice of Application Publication Date:	January 16, 2014
Decision Publication Date:	April 3, 2014
Project/SEPA Appeal Deadline:	April 17, 2014

For information on how to appeal a proposal, visit Development Services Center at City Hall or call (425) 452-6800. Comments on State Environmental Policy Act (SEPA) Determinations can be made with or without appealing the proposal within the noted comment period for a SEPA Determination. Appeal of the Decision must be received in the City's Clerk's Office by 5 PM on the date noted for appeal of the decision.

CONTENTS

I. Proposal Description 1

II. Site Description, Zoning, Land Use and Critical Areas 1

III. Consistency with Land Use Code Requirements: 3

IV. Public Notice and Comment 5

V. Summary of Technical Reviews 6

VI. State Environmental Policy Act (SEPA) 6

VII. Changes to proposal as a result of City review 6

VIII. Decision Criteria 6

IX. Conclusion and Decision 7

X. Conditions of Approval 8

Attachments

1. Environmental Checklist
2. Project Narrative
3. Project Plans
4. Response to public comment

I. Proposal Description

The applicant is requesting a Critical Areas Land Use Permit Request to restore an eroding stream bank along Coal Creek with a soft stabilization measure including rock, soil, and native vegetation. The proposal calls for the excavation of an area approximately 6 feet by 10 feet within the top of bank just above ordinary high water to remove the rocks and soil surrounding the cavity created by the stream erosion. The excavated area is proposed to be filled with large rocks and topsoil then covered with a geotextile fabric. Plantings will be placed along the streambank side of the stabilization.

Coal Creek is classified as a Type F stream. The activity is an permitted per LUC 20.25H.055, performance standards for allowed uses- Stabilization Measures however because the work is proposed within a critical area and critical area buffer a Critical Areas Land Use permit is required.

II. Site Description, Zoning, Land Use and Critical Areas

A. Site Description

The property is located at 5 Skagit Key along the banks of Coal Creek. The site is developed with a single family residence constructed in 1972.

Coal Creek runs in a northwesterly direction along the southwester property line. The site is relatively flat although the rear portion of the site sits lower than the rest and is protected from the stream by a low, grass-covered berm. See Figure 1: property aerial below.

Figure 1: Property aerials

B. Zoning

The properties are in the R-2.5 land use zoning district and the critical area overlay district, due to the presence of Coal Creek and its associated critical area buffer.

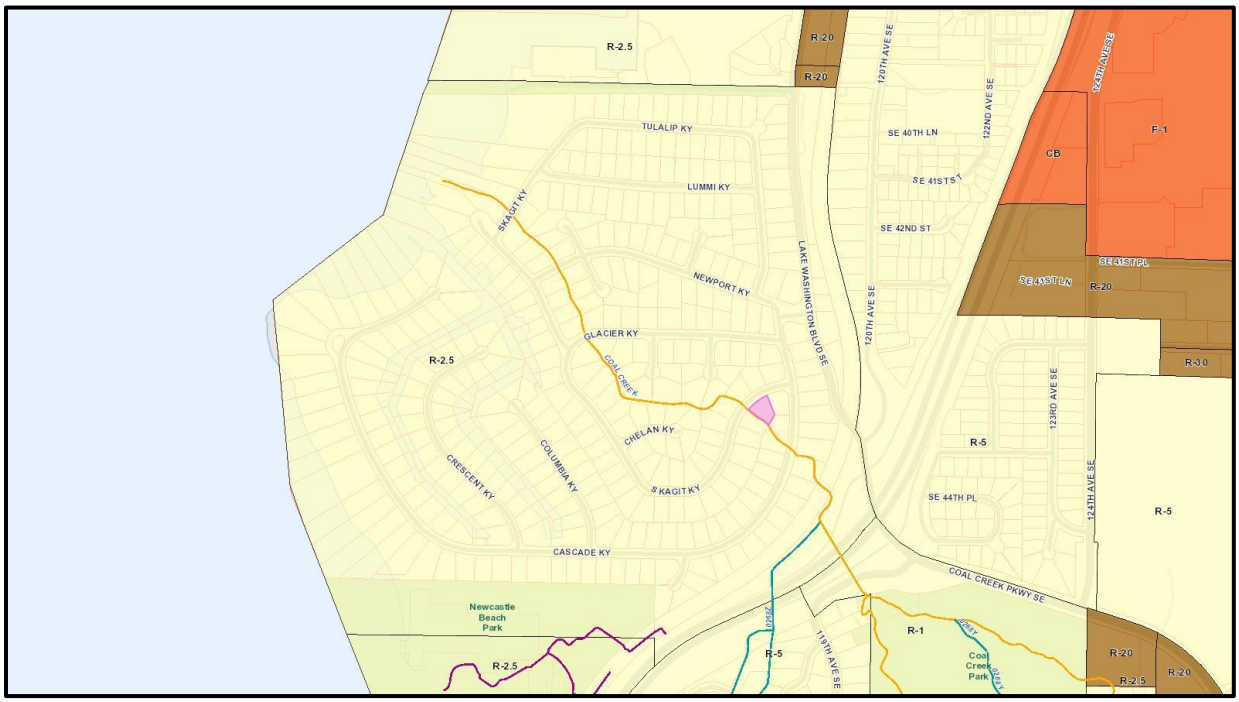

C. Land Use Context

The properties are in a single-family residential neighborhood. Nothing in the proposal will change the current use of the property or its impact on the neighboring properties in the same land use district.

D. Critical Areas Functions and Values

i. Streams and Riparian Areas

A healthy aquatic environment relies on processes sustained by a dynamic interaction between the stream and the adjacent riparian area. Riparian vegetation in floodplains and along stream banks provides a buffer to help mitigate the impacts of urbanization. Riparian areas support healthy stream conditions.

Riparian vegetation, particularly forested riparian areas, affect water temperature by providing shade to reduce solar exposure and regulate high ambient air temperatures, slowing or preventing increases in water temperature. Vegetated riparian areas also provide a source of large woody debris that helps create and maintain diverse in-stream habitat, as well as create woody debris jams that store sediments and moderate flood velocities.

Vegetated upland and wetland riparian areas ameliorate the negative effects of

large rain events by infiltrating storm water, desynchronizing peak crests and reducing flood flow rates. These areas then release this water to the stream at a later time as stream base flow.

Sparsely vegetated or vegetated buffers with non-native species may not perform the needed functions of stream buffers. In cases where the buffer is not well vegetated, it is necessary to either increase the buffer width or require that the standard buffer width be restored or revegetated. Until the newly planted buffer is established the near term goals for buffer functions may not be attained, but as long as the buffer is kept undeveloped with structures or hardscape improvements, the potential exists for the functions to be provided.

ii. Floodplains

The value of floodplains can be described in terms of both the hydrologic and ecological functions that they provide. Flooding of occurs when either runoff exceeds the capacity of rivers and streams to convey water within their banks, or when engineered stormwater systems become overwhelmed. Studies have linked urbanization with increased peak discharge and channel degradation (Dunne and Leopold 1978; Booth and Jackson 1997; Konrad 2000). Floodplains diminish the effects of urbanization by temporarily storing water and mediating flow to downstream reaches. The capacity of a floodplain to buffer upstream fluctuations in discharge may vary according to valley confinement, gradient, local relief, and flow resistance provided by vegetation. Development within the floodplain can dramatically affect the storage capacity of a floodplain, impact the hydrologic regime of a basin and present a risk to public health and safety and to property and infrastructure.

III. Consistency with Land Use Code Requirements:

A. Zoning District Dimensional Requirements:

The site is located in the R-2.5 land use zoning district. The applicant is proposing restoration of the stream bank to the preexisting configuration and native plant restoration of the bank. This development will be occurring within the stream critical area and stream critical area buffer of a Type F stream. LUC 20.20.025 states, “In any event, the critical area buffer and structure setbacks of LUC 20.25H.035 apply.” No modification of the stream critical area buffer and critical area structure setback is proposed.

B. Consistency with Critical Areas Performance Standard:

i. Performance Standards for Stabilization Measures LUC 20.25H.055.C.3.m

The proposed activity is a stabilization measure within a stream critical area buffer. In order to approve the proposed technique the applicant must demonstrate the following performance standards are met:

(A) Hard Stabilization Measures. As used in this part, “hard stabilization measures” include: rock revetments, gabions, concrete groins, retaining walls, bulkheads and similar measures which present a vertical or nearly vertical interface with the water.
(B) Soft Stabilization Measures. As used in this part, “soft stabilization measures” include: biotechnical measures, bank enhancement, anchor trees, gravel placement, stepped back rockeries, vegetative plantings and similar measures that use natural materials engineered to provide stabilization while mimicking or preserving the functions and values of the critical area.
(C) Avoidance Measures. As used in this part, “avoidance measures” refer to techniques used to minimize or prevent erosion or slope collapse that do not involve modification of the bank or slope. “Avoidance measures” include vegetation enhancement, upland drainage control, and protective walls or embankments placed outside of the critical area and critical area buffer.
(D) Technically Feasible. The determination of whether a technique or stabilization measure is “technically feasible” shall be made by the Director as part of the decision on the underlying permit after consideration of a report prepared by a qualified professional addressing the following factors:

(1) Site conditions, including topography and the location of the primary structure in relation to the critical area;
(2) The location of existing infrastructure necessary to support the proposed measure or technique;
(3) The level of risk to the primary structure or infrastructure presented by erosion or slope failure and ability of the proposed measure to mitigate that risk;
(4) Whether the cost of avoiding disturbance of the critical area or critical area buffer is substantially disproportionate as compared to the environmental impact of proposed disturbance, including any continued impacts on functions and values over time; and
(5) The ability of both permanent and temporary disturbance to be mitigated.

Response: The site contains an existing single family residence separated from the creek by a low grass-covered berm. The berm is approximately 2 feet in height and 18 feet wide at the top. The stream runs bankfull to near the top of the berm and the yard and lower story of the house are prone to flooding. A section of the berm stream bank has experience erosion and a cavity has formed that extends more than three feet into the bank leaving the area susceptible to collapse and further erosion. The risk to the primary structure is great should the berm fail. Moving the structure to another location is not feasible because of the lot size. The cost of avoiding the critical area buffer is substantially disproportionate compared to the proposed disturbance. The failing berm area will be excavated and rock and soil will be placed in its location. Native vegetation and a geotextile fabric will be installed to stabilization the restored area. Areas of temporary disturbance will be restored to the prior grass condition. The newly stabilized area will be planted with native vegetation. Alternatives to the proposed approach were considered including the use of large woody debris in the several stream locations. However, wood was not included in the design because of the potential for additional scour and the flow constriction that could result in

further exacerbating the flooding condition in the vicinity of the project. Harder stabilization measures were likewise not feasible and would have had a greater impact on the riparian functions. The project is the minimum necessary to limit impacts to the site while addressing the short term concerns about site erosion.

ii. Performance standards for floodplains LUC 20.25H.180

The applicant is proposing to restore an eroding stream bank along Coal Creek with a soft stabilization measure including rock, soil, and native vegetation. Coal Creek is known to contain an Area of Special Flood Hazard as mapped by the Federal Emergency Management Agency "Flood Insurance Rate Map."

The proposal is an allowed use pursuant to LUC 20.25H.055 and must comply with the performance standards set for in the LUC 20.25H.180. The proposed developed does not meet the definition of a "structure" contained in LUC 20.25H, relative to areas of special flood hazard. No adverse impacts to habitat and no rise in the Base Flood Elevation (BFE) will result from the proposed project. No native vegetation will be removed.

IV. Public Notice and Comment

Application Date:	December 10, 2013
Public Notice (500 feet):	January 16, 2014
Minimum Comment Period:	January 30, 2014

The Notice of Application for this project was published in the City of Bellevue weekly permit bulletin on January 16, 2014. It was mailed to property owners within 500 feet of the project site. Two comments were received from outside agencies, the Muckleshoot Tribe and WA Department of Fisheries.

The comments are provided as Attachment to this staff decision. A summary of the comments is as follows:

- **Concern**-planting plan does not provide for full riparian functions and does not include native trees.
  Response-The scale of the project is less than 100 square feet in size. The site access issues and overall budget limited the scale of solution for the site. The applicant has agreed to add trees to the planting plan which will provide additional riparian function absent in the existing condition.

- **Concern-**the existing rockery (berm) erosion is likely due to poor construction and the proposed application will not resolve likely future failure or
  Response- The project engineer provided a response in Attachment 4. The bank erosion appears to be limited in extent. Additionally, there appears to be no ongoing toe erosion observed. The project designs will be amended to include only rounded rather than angular rocks such that it would not be

problematic if some portion of the rocks did end up in the stream in the future.

V. Summary of Technical Reviews

Clearing and Grading:
The Clearing and Grading Division of the Development Services Department reviewed the proposed development for compliance with Clearing and Grading codes and standards. The Clearing and Grading staff found no issues with the proposal.

VI. State Environmental Policy Act (SEPA)

The environmental review indicates no probability of significant adverse environmental impacts occurring as a result of the proposal. The Environmental Checklist submitted with the application adequately discloses expected environmental impacts associated with the project. The City codes and requirements, including the Clear and Grade Code, Utility Code, Land Use Code, Noise Ordinance, Building Code and other construction codes are expected to mitigate potential environmental impacts. Therefore, issuance of a Determination of Non-Significance (DNS) is the appropriate threshold determination under the State Environmental Policy Act (SEPA) requirements.

VII. Changes to proposal as a result of City review

The applicant has agreed to include two additional trees in the planting plan as part of a required change to the proposal (See Section X for Conditions of Approval).

VIII. Decision Criteria

A. Critical Areas Land Use Permit Decision Criteria 20.30P
The Director may approve or approve with modifications an application for a critical areas land use permit if:

1. The proposal obtains all other permits required by the Land Use Code;

Finding: The proposal is required to obtain a clearing and grading permit. The proposal may also be required to obtain a Hydraulic Project Approval from the Washington Department of Fish and Wildlife.

2. The proposal utilizes to the maximum extent possible the best available construction, design and development techniques which result in the least impact on the critical area and critical area buffer;

Finding: Through the use of soft-stabilization techniques the applicant is utilizing the best available construction, design and development techniques. The work will occur just above the top of bank of the stream and temporary impacts will be limited.

Because the rock fill will be covered in soil and geotextile fabric with native planting, there will be no visible or physical obstructions. The project will be constructed with hand and small machinery positioned above the top of bank to minimize construction disturbance.

3. The proposal incorporates the performance standards of Part 20.25H to the maximum extent applicable, and ;

Finding: As discussed in Section III of this report, the proposal complies with all applicable performance standards of the Critical Areas Overlay District section of the Land Use Code.

4. The proposal will be served by adequate public facilities including street, fire protection, and utilities; and;

Finding: The property is currently served by adequate public facilities. The proposed development will not change the need for public services.

5. The proposal includes a mitigation or restoration plan consistent with the requirements of LUC Section 20.25H.210; and

Finding: The proposal includes a restoration plan consistent with the requirements of LUC 20.25H.210. A total of 2 additional native trees shall be planted along with the proposed planting plan. The applicant will be required to finalize the plan with performance standards for monitoring and submit assurance devices for review and approval of the required subsequent clearing and grading permit. See Section X for condition.

6. The proposal complies with other applicable requirements of this code.

Finding: As discussed in Section III of this report, the proposal complies with all other applicable requirements of the Land Use Code.

IX. Conclusion and Decision

After conducting the various administrative reviews associated with this proposal, including Land Use Code consistency, SEPA, City Code and Standard compliance reviews, the Development Services Director does hereby **approve with conditions** the proposal to restore an eroding stream bank along Coal Creek with a soft stabilization measure including rock, soil, and native vegetation.

Note- Expiration of Approval: In accordance with LUC 20.30P.150 a Critical Areas Land Use Permit automatically expires and is void if the applicant fails to file for a Clearing and Grading Permit or other necessary development permits within one year of the effective date of the approval.

X. Conditions of Approval

The applicant shall comply with all applicable Bellevue city codes and ordinances including but not limited to:

Applicable Ordinances	Contact Person
Clearing and Grading Code- BCC 23.76	Janney Gwo, 425-452-6190
Land Use Code- BCC 20.25H	Heidi M. Bedwell, 425-452-4862
Noise Control- BCC 9.18	Heidi M. Bedwell, 425-452-4862

The following conditions are imposed under the Bellevue City Code or SEPA authority referenced:

1. Clearing and Grading Permit Required: In order to ensure the sensitive stream resource is protected from degradation and that applicable codes and regulations are met, a Clearing and Grading Permit must be obtained from the City of Bellevue before any work can begin.

Authority: Bellevue City Code 23.76
Reviewer: Savina Uzunow, Clear and Grade

2. Applicable State and Federal Permits: Before the underlying clearing and grading permit can be issued and work can proceed, all applicable state and federal permits must be presented to the Development Services Department.

Authority: Land Use Code 20.25H.180.C.2
Reviewer: Heidi M. Bedwell, Land Use

3. Restoration Planting Plan for Areas of Disturbance: In addition to the proposed planting plan (Attachment 3), the application shall also install 2 native trees per the Critical Areas Handbook at the edge of the proposed stabilization area. A revised planting plan shall be submitted as part of the required clearing and grading permit.
Authority: Land Use Code 20.25H.220
Reviewer: Heidi M. Bedwell, Land Use

4. Performance and Monitoring Plan: The applicant has proposed a performance and monitoring plan (See Attachment 3). To ensure the installed plant material successfully establishes and can perform the functions and values necessary for riparian vegetation, the following applicant shall submit the plan as part of the required clearing and grading permit and provide the city with an annual report performance standards shall be reported on annually**:**

Performance Standards			
Monitoring Year after installation	Year One	Year Two	Year Three
Shrub and Sapling Tree Survival	100%	90%	80%
Percent Invasive Species Coverage	<20%	<20%	20%

Authority: Land Use Code 20.25H.210
Reviewer: Heidi M. Bedwell, Land Use

5. Maintenance Assurance Device: In order to ensure the required landscape restoration successfully establishes, a maintenance assurance device in an amount equal to 25% of the cost of labor and materials for the landscape installation shall be held for a period of three years from the date of successful installation. The maintenance assurance device will be released to the applicant upon receipt of documentation of reporting successful establishment in compliance with the performance standards stated in condition 4 above.

Authority: Land Use Code 20.25H.210
Reviewer: Heidi M. Bedwell, Land Use

6. Rainy Season restrictions: Due to the proximity to a Type F stream, no clearing and grading activity may occur during the rainy season, which is defined as November 1 through April 30 without written authorization of the Development Services Department.

Authority: Bellevue City Code 23.76.093.A,
Reviewer: Savina Uzunow, Clearing and Grading

7. Pesticides, Insecticides, and Fertilizers: The applicant must submit as part of the required Clearing and Grading Permit information regarding the use of pesticides, insecticides, and fertilizers in accordance with the City of Bellevue's "Environmental Best Management Practices".

Authority: Land Use Code 20.25H.220
Reviewer: Heidi M. Bedwell, Land Use

8. Noise Control: Noise related to construction is exempt from the provisions of BCC 9.18 between the hours of 7 am to 6 pm Monday through Friday and 9 am to 6 pm on Saturdays, except for Federal holidays and as further defined by the Bellevue City Code. Noise emanating from construction is prohibited on Sundays or legal holidays unless expanded hours of operation are specifically authorized in advance. Requests for construction hour extension must be done in advance with submittal of a construction noise expanded exempt hours permit.

Authority: Bellevue City Code 9.18
Reviewer: Heidi M. Bedwell, Land Use

Attachment 1

Checklist reviewed by Heidi M. Bedwell (HMB) January 14, 2014

ENVIRONMENTAL CHECKLIST

12/21/00

Thank you in advance for your cooperation and adherence to these procedures. If you need assistance in completing the checklist or have any questions regarding the environmental review process, please visit or call the Permit Center (425-452-6864) between 8 a.m. and 4 p.m., Monday through Friday (Wednesday, 10 to 4). Our TTY number is 425-452-4636.

INTRODUCTION

Purpose of the Checklist:

The State Environmental Policy Act (SEPA), chapter 43.21c RCW, requires all governmental agencies to consider the environmental impacts of a proposal before making decisions. An environmental impact statement (EIS) must be prepared for all proposals with probable significant adverse impacts on the quality of the environment. The purpose of this checklist is to provide information to help you and the City of Bellevue identify impacts from your proposal (and to reduce or avoid impacts from the proposal, if it can be done) and to help the City decide whether an EIS is required.

Instructions for Applicants:

This environmental checklist asks you to describe some basic information about your proposal. Answer the questions briefly, with the most precise information known, or give the best description you can. You must answer each question accurately and carefully, to the best of your knowledge. In most cases, you should be able to answer the questions from your own observations or project plans without the need to hire experts. If you really do not know the answer, or if a question does not apply to your proposal, write "do not know" or "does not apply." Complete answers to the questions now may avoid unnecessary delays later.

Some questions ask about governmental regulations, such as zoning, shoreline, and landmark designations. Answer these questions if you can. If you have problems, the Planner in the Permit Center can assist you.
The checklist questions apply to all parts of your proposal, even if you plan to do them over a period of time or on different parcels of land. Attach any additional information that will help describe your proposal or its environmental effects. Include references to any reports or studies that you are aware of which are relevant to the answers you provide. The City may ask you to explain your answers or provide additional information reasonably related to determining if there may be significant adverse impacts.

Use of a Checklist for Nonproject Proposals: *A nonproject proposal includes plans, policies, and programs where actions are different or broader than a single site-specific proposal.*

For nonproject proposals, complete the Environmental Checklist even though you may answer "does not apply" to most questions. In addition, complete the Supplemental Sheet for Nonproject Actions available from Permit Processing.

For nonproject actions, the references in the checklist to the words *project*, *applicant*, and *property* or *site* should be read as *proposal*, *proposer*, and *affected geographic area*, respectively.

Attach an 8½" x 11" vicinity map which accurately locates the proposed site.

City of Bellevue Submittal Requirements	**27a**

ENVIRONMENTAL CHECKLIST

12/21/00

If you need assistance in completing the checklist or have any questions regarding the environmental review process, please visit or call the Permit Center (425-452-6864) between 8 a.m. and 4 p.m., Monday through Friday (Wednesday, 10 to 4). Our TTY number is 425-452-4636.

BACKGROUND INFORMATION

Property Owner: **Mark and Jennifer Spatz**
5 Skagit Key
Bellevue, WA 98006

Contact Person: **Kenny Booth, The Watershed Company**
(If different from the owner. All questions and correspondence will be directed to the individual listed.)

Address: **750 6th Street South, Kirkland, WA 98033**

Phone: **(425) 822-5242**

Proposal Title: **Spatz Streambank Stabilization**

Proposal Location (Street address and nearest cross street or intersection) Provide a legal description if available:

Street Address:
5 Skagit Key
Bellevue, WA 98006

Parcel:
6065301040

Legal Description:
NEWPORT DIV # 2
Plat Block: 3
Plat Lot: 48

Please attach an 8½“ X 11” vicinity map that accurately locates the proposal site. **See last page.**

Give an accurate, brief description of the proposal’s scope and nature:

General description:

The project site is located within the Newport Shores neighborhood at 5 Skagit Key in Bellevue, WA (tax parcel 6065301040). The site is surrounded by single-family residences on all sides with Coal Creek flowing in a northwesterly direction along the southwestern property line. The site includes a two-story residence constructed in 1972. The parcel is 15,118 square feet in size with the residence situated approximately 25 feet from the top of the Coal Creek streambank.

The site is relatively flat although the majority of the rear portion of the lot sits lower than the rest and is protected from the stream by a low, grass-covered berm. The berm is approximately 2 feet in height and 18 feet wide at the top. The stream channel adjacent to the site is approximately 12 feet wide with steep, primarily ivy-covered banks. The yard area, including the berm, is mostly lawn with landscaping shrubs around the perimeter. Dense small trees and shrub vegetation borders the yard on the upstream,

southeast side.

About half way across the site, a section of streambank approximately 10 feet long, 3 feet high, and extending approximately 6 feet into the yard area has experienced erosion along the upper portions of the bank. Old sandbags are present in this location having been placed as temporary protection. The lower bank appears to be relatively stable, with erosion occurring primarily near the top of the bank along what would be considered the face of the berm. During high flows the grass covered portion of the upper bank has been undermined, creating a large cavity. The cavity extends more than three feet into the bank, leaving the area susceptible to collapse and further erosion.

Continued erosion in this area would eliminate the entire top of bank, which serves as a low berm, and high flows would have a direct path to the house. To remedy this, the proposed plan calls for an area of excavation within the top of the bank just above the ordinary high water mark to remove much of the area where the cavity currently exists. This area would be filled with large rocks and topsoil then covered with a geotextile fabric. Plantings would then be placed along the streambank side through the fabric both to cover it and also to further stabilize the bank. Grass would be re-planted in the disturbed yard area above the top of bank.

1. Acreage of site: **The entire parcel is 15,118 square feet (.347 acre)**
2. Number of dwelling units/buildings to be demolished: **None.**
3. Number of dwelling units/buildings to be constructed: **None.**
4. Square footage of buildings to be demolished: **None.**
5. Square footage of buildings to be constructed: **None.**
6. Quantity of earth movement (in cubic yards): **3.7 cy cut / 8.7 cy fill**
7. Proposed land use: **No changes are proposed to the existing land use.**
8. Design features, including building height, number of stories, and proposed exterior materials: **Not applicable.**

10. Other

Estimated date of completion of the proposal or timing of phasing:

Construction would begin immediately following permit issuance subject to any WDFW required work windows.

Do you have any plans for future additions, expansion, or further activity related to or connected with this proposal? If yes, explain.

None at this time.

HMB 1.15.14

List any environmental information you know about that has been prepared, or will be prepared, directly related to this proposal.

None.

Do you know whether applications are pending for governmental approvals of other proposals directly affecting the property covered by your proposal? If yes, explain. List dates applied for and file numbers, if known.

No other applications are pending for government approvals of other proposals directly affecting the subject property.

List any government approvals or permits that will be needed for your proposal, if known. If permits have been applied for, list application date and file numbers, if known.

-Critical Areas Land Use Permit, City of Bellevue
-Clearing and Grading Permit, City of Bellevue
-Hydraulic Project Approval, Washington Department of Fish and Wildlife

Please provide one or more of the following exhibits, if applicable to your proposal.
(Please check appropriate box(es) for exhibits submitted with your proposal):

☐ Land Use Reclassification (rezone)
Map of existing and proposed zoning

☐ Preliminary Plat or Planned Unit Development
Preliminary plat map

☑ Clearing & Grading Permit
Plan of existing and proposed grading
Development plans

☐ Building Permit (or Design Review)
Site plan
Clearing & grading plan

☐ Shoreline Management Permit
Site plan

HMB 1.15.14

A. ENVIRONMENTAL ELEMENTS

1. EARTH

a. General description of the site (circle one): Flat Rolling Hilly Steep slopes Mountains Other:

b. What is the steepest slope on the site (approximate percent slope)?

The site is relatively flat with the exception of the berm and streambanks.

c. What general types of soils are found on the site (for example, clay, sand, gravel, peat, muck)? If you know the classification of agricultural soils, specify them and note any prime farmland.

According to Natural Resources Conservation Service (NRCS) soil maps, the property contains Briscot silt loam.

d. Are there surface indications or history of unstable soils in the immediate vicinity? If so, describe.

Portions of the existing berm along the top of bank have been eroded by high stream flows.

e. Describe the purpose, type, and approximate quantities of any filling or grading proposed. Indicate source of fill.

Cut: 3.7 CY, soil

Fill: 8.7 CY, angular rock, topsoil

f. Could erosion occur as a result of clearing, construction, or use? If so, generally describe.

Some minor erosion could occur during excavation of the berm. However, BMPs would be incorporated to minimize impacts during all clearing and grading activities.

g. About what percent of the site will be covered with impervious surfaces after project construction (for example, asphalt or buildings)?

No new impervious surfaces are proposed.

h. Proposed measures to reduce or control erosion, or other impacts to the earth, if any:

All clearing and grading construction would be in accordance with City of Bellevue Clearing & Grading Code (Chapter 23.76), permit conditions, and all other applicable codes, ordinances, and standards. As needed, the applicant will install temporary erosion and sedimentation control measures such as silt fencing. A silt fence would be installed around exposed soils as necessary to prevent silt-laden water from leaving the site during rainfall events.

HMB 1.15.14

2. AIR

a. What types of emissions to the air would result from the proposal (i.e., dust, automobile, odors, industrial wood smoke) during construction and when the project is completed? If any, generally describe and give approximate quantities if known.

Emissions from vehicle trips and construction equipment would occur for a short period of time during site construction. After project completion, there would be no change in emissions from existing conditions.

b. Are there any off-site sources of emissions or odor that may affect your proposal? If so, generally describe.

No off-site sources of emissions or odor would affect the proposal.

c. Proposed measures to reduce or control emissions or other impacts to air, if any:

Vehicles and construction equipment would be kept in good working order.

3. WATER

a. Surface:

1) Is there any surface water body on or in the immediate vicinity of the site (including year-round and seasonal streams, saltwater, lakes, ponds, wetlands)? If yes, describe type and provide names. If appropriate, state what stream or river it flows into.

Coal Creek.

2) Will the project require any work over, in, or adjacent to (within 200 feet) the described waters? If yes, please describe and attach available plans.

The entirety of the proposed project will occur within 200 feet of Coal Creek.

3) Estimate the amount of fill and dredge material that would be placed in or removed from surface water or wetlands and indicate the area of the site that would be affected. Indicate the source of fill material.

None.

4) Will the proposal require surface water withdrawals or diversions? Give general description, purpose, and approximate quantities if known.

The proposal would not require surface water withdrawals or diversions.

5) Does the proposal lie within a 100-year floodplain? If so, note location on the site plan.

Yes, the proposal lies within a 100-year floodplain.

6) Does the proposal involve any discharges of waste materials to surface waters? If so, describe the type of waste and anticipated volume of discharge.

The proposal does not involve any discharges of waste materials to surface waters.

HMB 1.15.14

b. Ground

1. Will ground water be withdrawn, or will water be discharged to ground water? Give a general description, purpose, and approximate quantities if known.

No withdrawal of ground water or discharge of water to ground water would occur as part of this project.

2) Describe waste material that will be discharged into the ground from septic tanks or other sources, if any (for example: Domestic sewage; industrial, containing the following chemicals. . . ; agricultural; etc.). Describe the general size of the system, the number of such systems, the number of houses to be served (if applicable), or the number of animals or humans the system(s) are expected to serve.

No waste material from septic tanks or other sources would be discharged into the ground as part of this project.

c. Water runoff (including stormwater):

1. Describe the source of runoff (including storm water) and method of collection and disposal, if any (include quantities, if known). Where will this water flow? Will this water flow into other waters? If so, describe.

Runoff from the immediate project site is not expected except at natural, near pre-project rates. In general, precipitation is expected to infiltrate into vegetated soils.

2) Could waste materials enter ground or surface waters? If so, generally describe.

Waste materials would not enter ground or surface waters due to water runoff.

d. Proposed measures to reduce or control surface, ground, and runoff water impacts, if any:

The erosion control measures described under question 1h would be implemented as necessary.

4. PLANTS

a. Check or circle types of vegetation found on the site:

- ☒ deciduous tree: alder, maple, aspen, other
- ☒ evergreen tree: fir, cedar, pine, other
- ☒ shrub:
- ☐ pasture
- ☐ crop or grain
- ☐ wet soil plants: cattail, buttercup, bulrush, skunk cabbage, other:
- ☐ water plants: water lily, eelgrass, milfoil, other
- ☒ other types of vegetation: grass

b. What kind and amount of vegetation will be removed or altered?

Lawn grass will be removed as part of the project.

HMB 1.15.14

c. List threatened or endangered species known to be on or near the site.

No threatened or endangered plant species are known to be on or near the site.

d. Proposed landscaping, use of native plants, or other measures to preserve or enhance vegetation on the site, if any:

The proposal involves the planting of approximately 65 square feet of native vegetation on the project site. Proposed plantings will include pacific ninebark, pea-fruited rose, evergreen huckleberry, red-osier dogwood, and sand strawberry.

5. ANIMALS

a. Circle any birds and animals which have been observed on or near the site or are known to be on or near the site:

birds: hawk, heron, eagle, songbirds, other:
mammals: deer, bear, elk, beaver, other:
fish: bass, salmon, trout, herring, shellfish, other

b. List any threatened or endangered species known to be on or near the site.

Adult and juvenile Chinook salmon and steelhead trout (listed as Threatened under the Federal Endangered Species Act) migrate through Coal Creek. Adults migrate upstream to reach spawning grounds; juveniles migrate downstream from their natal streams to reach the ocean. Coal Creek also contains coho salmon (Species of Concern under the Federal Endangered Species Act).

c. Is the site part of a migration route? If so, explain.

As described above, adult and juvenile salmon migrate up and downstream, respectively, through Coal Creek.

d. Proposed measures to preserve or enhance wildlife, if any:

The proposed project will enhance wildlife habitat through the installation of approximately 65 square feet of native plantings adjacent to the stream.

6. ENERGY AND NATURAL RESOURCES

a. What kinds of energy (electric, natural gas, oil, wood stove, solar) will be used to meet the completed project's energy needs? Describe whether it will be used for heating, manufacturing, etc.

There is no proposed change in the existing forms of energy currently used for the residence.

b. Would your project affect the potential use of solar energy by adjacent properties? If so, generally describe.

The project would not affect the potential use of solar energy by adjacent properties.

c. What kinds of energy conservation features are included in the plans of this proposal? List other proposed measures to reduce or control energy impacts, if any:

No changes to energy features are proposed.

HMB 1.15.14

7. ENVIRONMENTAL HEALTH

a. Are there any environmental health hazards, including exposure to toxic chemicals, risk of fire and explosion, spill, or hazardous waste, that could occur as a result of this proposal? If so, describe.

Typical environmental hazards associated with residential construction work (e.g. risk of fire, spills) could occur as part of this proposal.

1) Describe special emergency services that might be required.

Special emergency services are not anticipated at the site. In the unlikely event that a serious accident (e.g. fire or spill) occurs during construction, local fire department or emergency medical services might be required. After project completion, no special emergency services, other than those typically associated with residential uses, might be required.

2) Proposed measures to reduce or control environmental health hazards, if any:

During construction, standard precautions would be taken to ensure the safety of the work crew. Safety and accident response supplies would be on site. The construction manager would be contacted by a crew member immediately upon discovery of a spill. The construction manager would then ensure that the spill is cleaned up in the appropriate manner and would contact the appropriate authorities.

b. Noise

1) What types of noise exist in the area which may affect your project (for example: traffic, equipment, operation, other)?

Typical noise associated with adjacent traffic exists in the project area.

2) What types and levels of noise would be created by or associated with the project on a short-term or a long-term basis (for example: traffic, construction, operation, other)? Indicate what hours noise would come from the site.

Noise associated with project construction would be restricted to use of excavating and hauling equipment. Construction noise would be limited to normal daytime working hours. There would be no long-term noise associated with the completed project, other than that associated with a typical shoreline residential property.

3) Proposed measures to reduce or control noise impacts, if any:

As mentioned above, construction noise would be limited to daylight weekday hours. No other noise-control measures are necessary.

8. LAND AND SHORELINE USE

a. What is the current use of the site and adjacent properties?

The site and adjacent properties are currently in single-family residential use.

b. Has the site been used for agriculture? If so, describe.

The site has not been used for agriculture in recent history.

HMB 1.15.14

c. Describe any structures on the site.

The project site includes a single-family residence.

d. Will any structures be demolished? If so, what?

No.

e. What is the current zoning classification of the site?

The current zoning classification is R-2.5 (Single-Family Residential).

f. What is the current comprehensive plan designation of the site?

The current comprehensive plan designation is SF-M (Single-family Medium-density).

g. If applicable, what is the current shoreline master program designation of the site?

N/A

h. Has any part of the site been classified as an "environmentally sensitive" area? If so, specify.

Coal Creek has been classified as an "environmentally sensitive" area. Additionally, the stream is within the mapped 100-year floodplain.

i. Approximately how many people would reside or work in the completed project?

The project would not change the number of people who reside on the property.

j. Approximately how many people would the completed project displace?

No people would be displaced as a result of this project.

k. Proposed measures to avoid or reduce displacement impacts, if any:

No such measures are necessary.

l. Proposed measures to ensure the proposal is compatible with existing and projected land uses and plans, if any:

The proposal would comply with all applicable regulatory plans and codes.

9. HOUSING

a. Approximately how many units would be provided, if any? Indicate whether high, middle, or low-income housing.

The property currently features one single-family residence. This proposal would not affect the number of housing units on the property.

b. Approximately how many units, if any, would be eliminated? Indicate whether high, middle, or low-income housing.

None.

HMB 1.15.14

c. Proposed measures to reduce or control housing impacts, if any:

No such measures are necessary.

10. AESTHETICS

a. What is the tallest height of any proposed structure(s), not including antennas; what is the principal exterior building material(s) proposed?

No new structures are proposed.

b. What views in the immediate vicinity would be altered or obstructed?

Views will not be affected by the proposed project.

c. Proposed measures to reduce or control aesthetic impacts, if any:

No such measures are necessary.

11. LIGHT AND GLARE

a. What type of light or glare will the proposal produce? What time of day would it mainly occur?

Light or glare will not be produced by the finished project.

b. Could light or glare from the finished project be a safety hazard or interfere with views?

No.

c. What existing off-site sources of light or glare may affect your proposal?

None.

d. Proposed measures to reduce or control light and glare impacts, if any:

No such measures are necessary.

12. RECREATION

a. What designated and informal recreational opportunities are in the immediate vicinity?

In the immediate vicinity, Lake Washington provides recreational activities such as swimming, boating, and fishing. Newcastle Beach Park is located approximately 0.5 mile to the southwest.

b. Would the proposed project displace any existing recreational uses? If so, describe.

The proposed project would not displace any existing recreational uses.

c. Proposed measures to reduce or control impacts on recreation, including recreation opportunities to be provided by the project or applicant, if any:

No such measures are necessary.

HMB 1.15.14

13. HISTORIC AND CULTURAL PRESERVATION

a. Are there any places or objects listed on, or proposed for, national, state, or local preservation registers known to be on or next to the site? If so, generally describe.

No such places or objects are known to be on or next to the site.

b. Generally describe any landmarks or evidence of historic, archaeological, scientific, or cultural importance known to be on or next to the site.

No such landmarks or evidence is known to be on or next to the site.

c. Proposed measures to reduce or control impacts, if any:

Should historic, archeological, scientific or culturally significant items be encountered during implementation of this project, work would be temporarily stopped while the appropriate agencies are notified.

14. TRANSPORTATION

a. Identify public streets and highways serving the site, and describe proposed access to the existing street system. Show on site plans, if any.

The property takes access from Skagit Key. Site access would not be changed as a result of the proposed project.

b. Is site currently served by public transit? If not, what is the approximate distance to the nearest transit stop?

The nearest King County Metro transit stop is located approximately 0.3 mile feet to the southeast of the subject parcel, at the junction of Coal Creek Parkway and Interstate-405.

c. How many parking spaces would the completed project have? How many would the project eliminate?

The proposed project would not affect parking on the property.

d. Will the proposal require any new roads or streets, or improvements to existing roads or streets, not including driveways? If so, generally describe (indicate whether public or private).

The proposal would not require any new roads, or improvements to existing roads.

e. Will the project use (or occur in the immediate vicinity of) water, rail, or air transportation? If so, generally describe.

Water, rail, or air transportation would not be utilized by the completed project.

f. How many vehicular trips per day would be generated by the completed project? If known, indicate when peak volumes would occur.

Traffic generation would not change as result of the proposed project.

g. Proposed measures to reduce or control transportation impacts, if any:

No such measures are necessary.

HMB 1.15.14

15. PUBLIC SERVICES

a. Would the project result in an increased need for public services (for example: fire protection, police protection, health care, schools, other)? If so, generally describe.

No increase in public service needs would result from this project.

b. Proposed measures to reduce or control direct impacts on public services, if any.

No such measures are necessary.

16. UTILITIES

a. Circle utilities currently available at the site: electricity, natural gas, water, refuse service, telephone, sanitary sewer, septic system, other.

b. Describe the utilities that are proposed for the project, the utility providing the service, and the general construction activities on the site or in the immediate vicinity which might be needed.

The site is currently served by utilities. No new utilities are proposed as part of the project.

Signature

The above answers are true and complete to the best of my knowledge. I understand that the lead agency is relying on them to make its decision.

Signature

Kenny Booth, AICP
Associate Planner

Date Submitted: 12-10-13

HMB 1.15.14

<u>Vicinity Map</u> from iMAP (top) Google Maps (below)

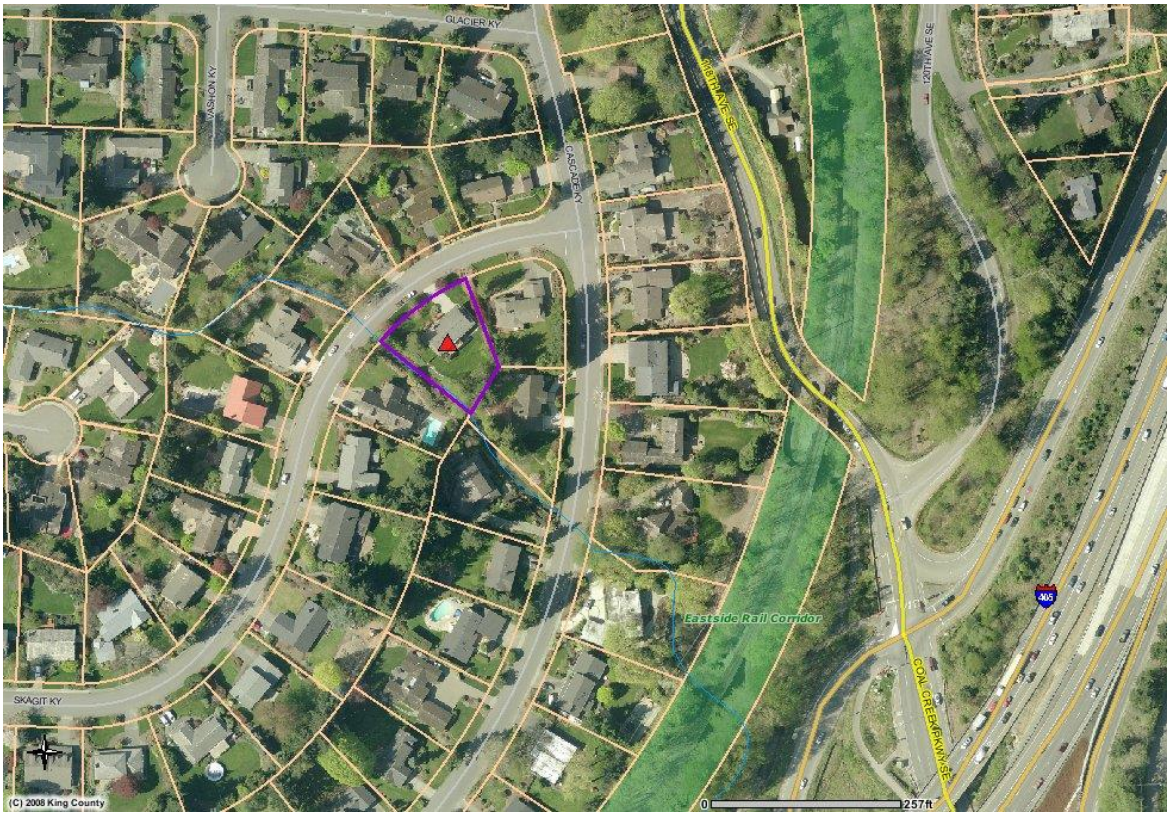

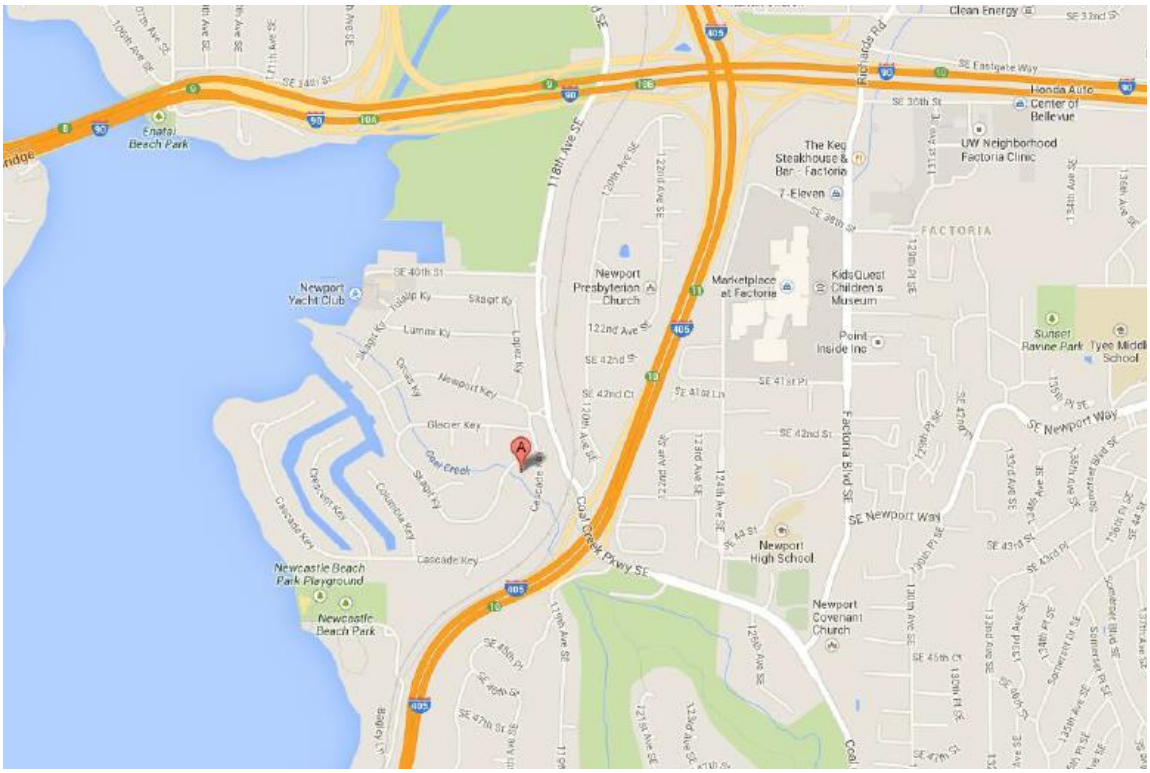

Attachment 2

Spatz Residence – Bank Stabilization
Critical Areas Land Use Permit
Narrative Description
November 2013

Description of the project site, including landscape features, existing development, and site history as applicable.

Response: The project site is located within the Newport Shores neighborhood at 5 Skagit Key in Bellevue, WA (tax parcel 6065301040). The site is surrounded by single-family residences on all sides with Coal Creek flowing in a northwesterly direction along the southwestern property line. The site includes a two-story residence constructed in 1972. The parcel is 15,118 square feet in size with the residence situated approximately 25 feet from the top of the Coal Creek streambank.

The site is relatively flat although the majority of the rear portion of the lot sits lower than the rest and is protected from the stream by a low, grass-covered berm. The berm is approximately 2 feet in height and 18 feet wide at the top. The stream channel adjacent to the site is approximately 12 feet wide with steep, primarily ivy-covered banks. The yard area, including the berm, is mostly lawn with landscaping shrubs around the perimeter. Dense small trees and shrub vegetation borders the yard on the upstream, southeast side.

About half way across the site, a section of streambank approximately 10 feet long, 3 feet high, and extending approximately 6 feet into the yard area has experienced erosion along the upper portions of the bank. Old sandbags are present in this location having been placed as temporary protection. The lower bank appears to be relatively stable, with erosion occurring primarily near the top of the bank along what would be considered the face of the berm. During high flows the grass covered portion of the upper bank has been undermined, creating a large cavity. The cavity extends more than three feet into the bank, leaving the area susceptible to collapse and further erosion. Because the berm in this area protects the lower-lying areas of the back yard and the home from flooding, further erosion to the top of the bank would result in flooding to the home.

Coal Creek is classified as a Type F (fish-bearing) stream and eventually flows into Lake Washington, approximately 0.5 mile downstream from the site. Type F

streams on sites with existing primary structures require standard buffer widths of 50 feet. No additional critical areas are found on-site or in the immediate vicinity.

A description of how the design constitutes the minimum necessary impact to the critical area.

Response: As mentioned, the toe of the bank appears to be in a stable condition with the bulk of the erosion occurring along the top of the ivy-covered bank. Continued erosion in this area would eliminate the entire top of bank, which serves as a low berm, and high flows would have a direct path to the house. To remedy this, the proposed plan calls for an area of excavation within the top of the bank just above the ordinary high water mark to remove much of the area where the cavity currently exists. This area would be filled with large rocks and topsoil then covered with a geotextile fabric. Plantings would then be placed along the streambank side through the fabric both to cover it and also to further stabilize the bank. Grass would be re-planted in the disturbed yard area above the top of bank.

The proposed work constitutes the minimum necessary impact, as project components will fortify an existing eroded area and therefore will not result in any measurable increase in the base flood elevation or cause further channel constriction. Once complete, the project site will be returned to a near pre-existing condition, with the addition of native plantings along a section of the streambank in place of existing non-native ivy.

Further, all proposed components of the project will be positioned above the OHWM and will be installed from areas also above the OHWM. No permanent impacts below the OHWM would occur as a result of the project. Impacts have been minimized to the greatest extent feasible by minimizing the area of stabilization and conducting all portions of the work above the stream's OHWM. Further, standard BMPs will be followed to minimize disturbance during construction.

A description of why there is no feasible alternative with less impact to the critical area, critical area buffer, or critical area structure setback.

Response: Past site history and the presence of the low berm indicates that the site is prone to flooding. The creek runs bankfull to near the top of the berm on occasion and the yard and lower story of the house are prone to flooding during these occurrences.

A natural in-stream remedy to the bank erosion, including the use of large woody debris, was studied. However, wood was not included in the design for two primary reasons - 1) large wood installed near the toe of the bank could cause additional scour, not only downward but possibly into the bank towards the berm and residence as well; and 2) placing wood in the channel would result in some level of flow constriction (the existing channel appears to have little or no excess capacity to pass high flows), thereby potentially worsening flooding. For these reasons large woody debris was not included in the proposal. However, despite the lack of wood, the project does include soft stabilization measures including placement of the material above the OHWM and extensive vegetative plantings. Additional alternatives considered consisted of hard stabilization measures including the placement of exposed rock or concrete above and below the OHWM. While these alternatives would have remedied the erosion problem, they were not proposed as they constitute stabilization techniques 'harder' than the selected alternative.

A description of alternatives considered and why the alternative selected is preferred.

Response: The alternatives considered as described above either cause unintended consequences or constitute design techniques with greater critical area impact than the selected alternative. Specifically, the use of large woody debris could cause additional scour, not only downward but possibly into the bank towards the berm and residence as well. In addition, placing wood in the channel would result in some level of flow constriction (the existing channel appears to have little or no excess capacity to pass high flows), thereby potentially worsening flooding in the immediate vicinity. The more impactful alternatives (placement of exposed rock or concrete) would have resulted in greater impact to the functions of the stream by preventing or inhibiting vegetation growth along the treated bank sections. Vegetation provides shade and organic stream inputs, helps stabilize banks, and produces terrestrial insects as food for fish.

A summary of how the proposal meets each of the decision criteria contained in Land Use Code Section 20.30P.

A. The proposal obtains all other permits required by the Land Use Code;

Response: The project applicant has applied for a Critical Areas Land Use Permit (LO) to conduct an allowed activity (stabilization measures) within a stream critical area and area of special flood hazard. No other City of Bellevue land use permits are required of the project at this time.

B. The proposal utilizes to the maximum extent possible the best available construction, design and development techniques which result in the least impact on the critical area and critical area buffer;

Response: The proposed streambank stabilization project will occur just above the OHWM of Coal Creek. Locating all work above the OHWM will limit temporary impacts to the stream and result in no permanent stream impacts. Rock placement will include a full wrapping in geotextile fabric and the placement of native vegetation within soil-filled voids between the rocks. This design technique results in no visible or physical obstruction presented by the rocks. Rather, the proposed physical interface will consist solely of native plantings along the upper streambank. Finally, the project will be constructed by hand and small machinery positioned above the OHWM with standard BMPs followed to minimize disturbance during construction. Therefore, the project has utilized the best available construction, design, and development techniques to limit impacts to the critical area and critical area buffer.

C. The proposal incorporates the performance standards of Part 20.25H LUC to the maximum extent applicable;

Response: See below for stream critical area (LUC 20.25H.080.A) and areas of special flood hazard (LUC 20.25H.180.C) performance standard compliance.

D. The proposal will be served by adequate public facilities including streets, fire protection, and utilities;

Response: The existing site is served by adequate public facilities. No increase in demand for public services will result from the proposed streambank stabilization project.

E. The proposal includes a mitigation or restoration plan consistent with the requirements of LUC 20.25H.210; except that a proposal to modify or remove vegetation pursuant to an approved Vegetation Management Plan under LUC 20.25H.055.C.3.i shall not require a mitigation or restoration plan;

Response: A restoration plan has been prepared in accordance with the requirements of LUC 20.25H.210. The plan has been submitted concurrently with this project narrative.

F. The proposal complies with other applicable requirements of this code.

Response: The proposed project complies with all other applicable City of Bellevue Land Use Codes.

A summary of how the proposal meets each of the criteria and performance standards contained in Land Use Code Section 20.25H associated with the critical area you are modifying.

Response: Stabilization measures within stream critical areas and areas of special flood hazard are allowed pursuant to LUC 20.25H.055.C.3.m, so long as compliance with LUC 20.25H.080.A and LUC 20.25H.180.C is shown. A discussion of compliance with these sections is presented below.

20.25H.055.C.3.m. Stabilization Measures.

See LUC 20.25E.080.E for standards regulating shoreline stabilization measures. Proposed stabilization measures within a critical area or critical area buffer to protect against streambank erosion or steep slopes or landslide hazards may be approved in accordance with this subsection.

i. When Allowed. New or enlarged stabilization measures shall be allowed only to protect existing primary structures and infrastructure, or in connection with uses and development allowed pursuant to subsection B of this section. Stabilization measures shall be allowed only where avoidance measures are not technically feasible.

Response: The proposed stabilization measures are intended to stabilize an existing berm that is protecting the existing residence at 5 Skagit Key. The residence is situated approximately 25 feet from the stream channel but less than 10 feet from the top of the bank/berm. Floodwaters along this section of Coal Creek have eroded portions of the top of the bank/berm, resulting in a large cavity beneath the berm. With continued high water flows, the cavity is likely to increase in size and the berm will no longer be able to protect the structure from floodwaters. Therefore, in order to stabilize portions of the top of bank/berm and to protect the residence, the placement of large rock and native plantings is proposed. Avoidance measures are not technically feasible, in that avoidance would lead to further bank erosion, resulting in continued loss of property and threats to the existing residence.

ii. Type of Stabilization Measure Used. Where a stabilization measure is allowed, soft stabilization measures shall be used, unless the applicant demonstrates that soft stabilization measures are not technically feasible. An applicant asserting that soft stabilization measures are not technically feasible shall provide the information relating to each of the factors set forth in subsection C.3.m.iii.(D) of this section for a determination of technical feasibility by the Director. Only after a determination that soft stabilization measures are not technically feasible shall hard stabilization measures be permitted.

iii. Definitions.

(A) Hard Stabilization Measures. As used in this part, "hard stabilization measures" include: rock revetments, gabions, concrete groins, retaining walls, bulkheads and similar measures which present a vertical or nearly vertical interface with the water.
(B) Soft Stabilization Measures. As used in this part, "soft stabilization measures" include: biotechnical measures, bank enhancement, anchor trees, gravel placement, stepped back rockeries, vegetative plantings and similar measures that use natural materials engineered to provide stabilization while mimicking or preserving the functions and values of the critical area.
(C) Avoidance Measures. As used in this part, "avoidance measures" refer to techniques used to minimize or prevent erosion or slope collapse that do not involve modification of the bank or slope. "Avoidance measures" include vegetation enhancement, upland drainage control, and protective walls or embankments placed outside of the critical area and critical area buffer.
(D) Technically Feasible. The determination of whether a technique or stabilization measure is "technically feasible" shall be made by the Director as part of the decision on the underlying permit after consideration of a report prepared by a qualified professional addressing the following factors:

(1) Site conditions, including topography and the location of the primary structure in relation to the critical area;
(2) The location of existing infrastructure necessary to support the proposed measure or technique;
(3) The level of risk to the primary structure or infrastructure presented by erosion or slope failure and ability of the proposed measure to mitigate that risk;
(4) Whether the cost of avoiding disturbance of the critical area or critical area buffer is substantially disproportionate as compared to the environmental impact of proposed disturbance, including any continued impacts on functions and values over time; and
(5) The ability of both permanent and temporary disturbance to be mitigated.

Response: The proposed design represents a combination of hard and soft stabilization measures. Large rock would be considered 'hard' while the proposed plantings are a 'soft' technique. However, the use of large rock is somewhat 'softened' by its placement above the OHWM and also by the fact the rock will be packed with topsoil, covered by geotextile fabric, and further hidden by native plantings. A 'softer' technique was considered and would have included the use of large woody debris. However, due to the nature of the constricted channel in the project area, the use of wood would likely have contributed to additional scour, not only downward but possibly into the bank towards the berm and residence as well. In addition, placing wood in the channel would result in some level of flow constriction (the existing channel appears to have little or no excess capacity to pass high flows), thereby potentially worsening flooding in the immediate vicinity.

20.25H.180.C – Development in the area of special flood hazard: General Performance Standards

4. No Rise in the Base Flood Elevation (BFE). Any allowed use or development shall not result in a rise in the BFE.

Response: The proposed project includes the placement of rock within a large cavity that has developed within the top of the bank along Coal Creek. Because the cavity has been eroded during recent flood events, the placement of rock within these areas will not result in an increase in the height or width of the existing berm or a decrease in the cross-sectional area of the stream channel. Rather, rock placement will return the berm and its associated upper streambank to their pre-existing dimensions, albeit with a more solid substructure. Therefore, there will be no rise in the base flood elevation of Coal Creek within the project vicinity.

7. Compensatory Storage. Development proposals must not reduce the effective base flood storage volume of the area of special flood hazard. Grading or other activity that would reduce the effective storage volume must be mitigated by creating compensatory storage on the site.

Response: As explained in the above response, there is anticipated to be no net change in streambank or berm dimensions and no rise in the base flood elevation over pre-existing conditions due to the proposed actions. Therefore, no reduction in the effective base flood storage volume of the area is expected.

20.25H.080.A Performance Standards.
Development on sites with a type S or F stream or associated critical area buffer shall incorporate the following performance standards in design of the development, as applicable:

1. *Lights shall be directed away from the stream.*

   Response: No lights are proposed as part of the streambank stabilization project.

2. *Activity that generates noise such as parking lots, generators, and residential uses shall be located away from the stream or any noise shall be minimized through use of design and insulation techniques.*

   Response: The streambank stabilization project will not result in any new long-term noise generating activities.

3. *Toxic runoff from new impervious area shall be routed away from the stream.*

Response: No new impervious surfaces are proposed as part of the project.

4. *Treated water may be allowed to enter the stream critical area buffer.*

   Response: No change in on-site runoff patterns or drainage facilities is proposed.

5. *The outer edge of the stream critical area buffer shall be planted with dense vegetation to limit pet or human use.*

   Response: New plantings are proposed to help stabilize the streambank. Plantings include pacific ninebark, pea-fruited rose, evergreen huckleberry, red-osier dogwood, and sand strawberry.

6. *Use of pesticides, insecticides and fertilizers within 150 feet of the edge of the stream critical area buffer shall be in accordance with the City of Bellevue's "Environmental Best Management Practices," now or as hereafter amended.*

   Response: Generally, weed control efforts in the stream buffer will employ manual removal. If any persistent weed or pest problems require pesticide control, the City would be contacted to verify compliance with City of Bellevue BMPs and, if allowed, a licensed pesticide applicator would be hired.

COAL CREEK BANK STABILIZATION

Attachment 3

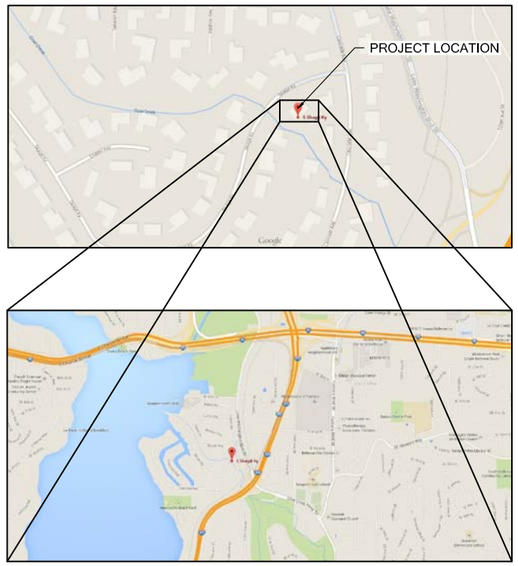

VICINITY MAP

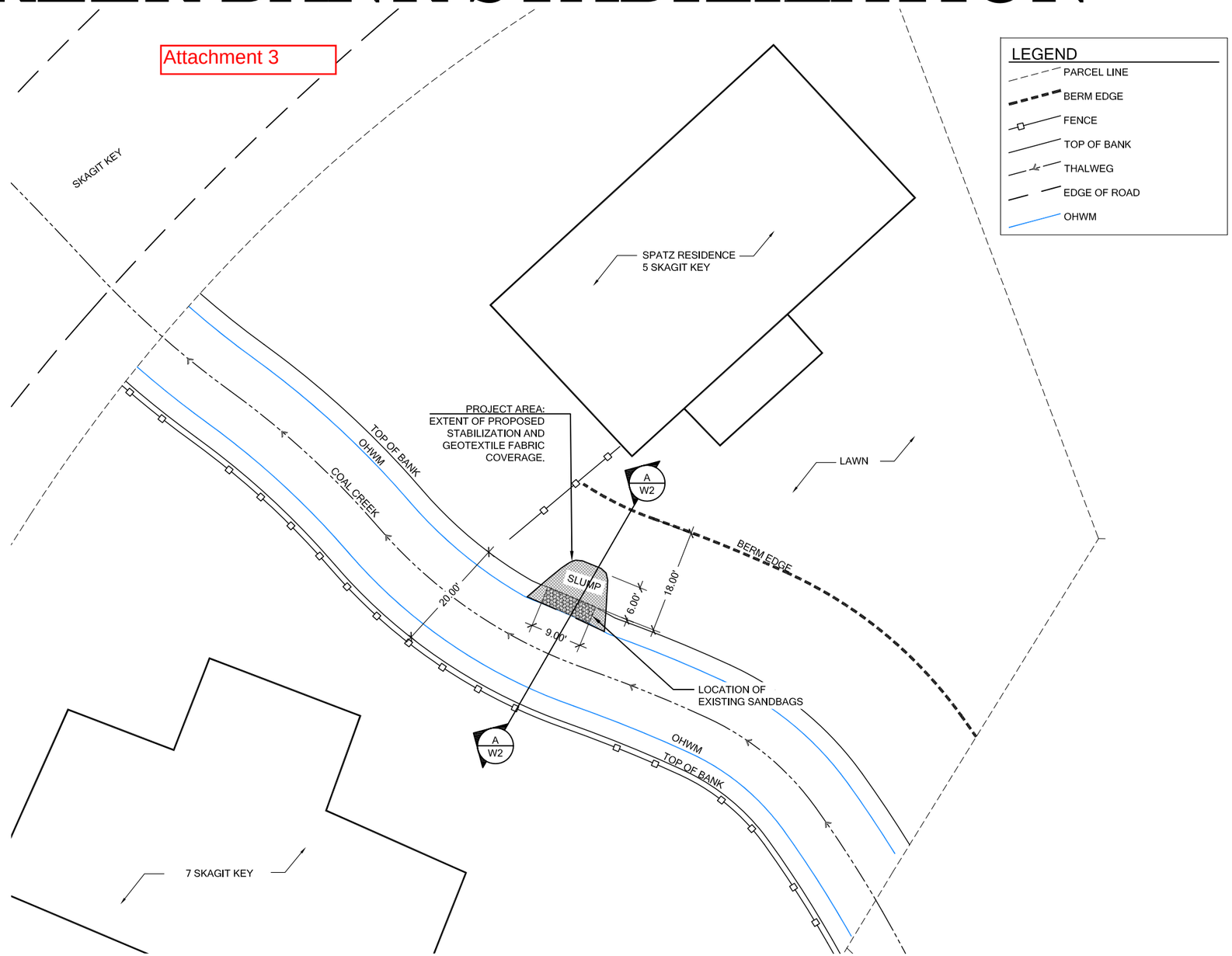

LEGEND
- PARCEL LINE
- BERM EDGE
- FENCE
- TOP OF BANK
- THALWEG
- EDGE OF ROAD
- OHWM

NOTE:
SITE NOT SURVEYED. ALL LOCATIONS APPROXIMATE AND SHOULD BE FIELD VERIFIED

LEGAL DESCRIPTION
NEWPORT DIV #2
PLAT BLOCK = 3
PLAT LOT = 48

SHEET INDEX

1. OVERALL SITE PLAN
2. BANK STABILIZATION SECTIONS
3. PLANTING PLAN, SCHEDULE, DETAILS AND INSTALLATION SPECIFICATIONS
4. TESC NOTES AND DETAILS
5. MONITORING PROGRAM AND CONSTRUCTION SEQUENCE

CONTACTS

CLIENT:	JENNIFER SPATZ
ADDRESS:	5 SKAGIT KY, BELLEVUE, WA
CONTACT:	JENNIFER SPATZ
PHONE:	(206) 890-3442
PROJECT CONSULTANT:	THE WATERSHED COMPANY
ADDRESS:	750 SIXTH STREET SOUTH KIRKLAND, WA 98033
CONTACT:	KENNY BOOTH
PHONE:	(425)822-5242

811 Know what's below. Call before you dig.

OVERALL SITE PLAN
SCALE: 1" = 10'-0" (IF PLOTTED AT 22 X 34)

0 10' 20' 40'

THE WATERSHED COMPANY
750 Sixth Street South
Kirkland WA 98033
p 425.822.5242 f 425.827.8136
www.watershedco.com
Science & Design

COAL CREEK BANK STABILIZATION
BANK STABILIZATION PLAN
SPATZ RESIDENCE
5 SKAGIT KY
BELLEVUE, WA

SUBMITTALS & REVISIONS

NO.	DATE	DESCRIPTION	BY
1	11-11-13	REVIEW SET	GS
2	11-20-13	REVIEW SET	MSF

SHEET SIZE:
ORIGINAL PLAN IS 22"X34" . SCALE ACCORDINGLY.

PROJECT MANAGER: KB
DESIGNED: GJ, GS
DRAFTED: GS
CHECKED: MG
JOB NUMBER: 130833
SHEET NUMBER: W1OF 5

DATE 7/7/2008 PRINTED BY GRACE SINAGA FILENAME 130833 - COAL CREEK SPATZ.DWG

© Copyright- The Watershed Company

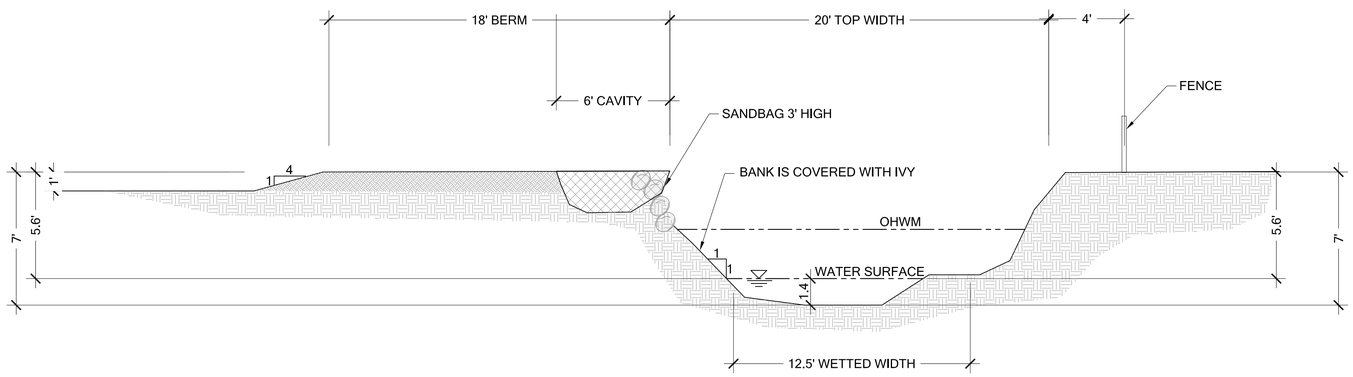

1 EXISTING CONDITIONS CROSS SECTION A-A

Scale: 1/4" = 1'-0" (IF PLOTTED AT 22 X 34)

0 4' 8' 16'

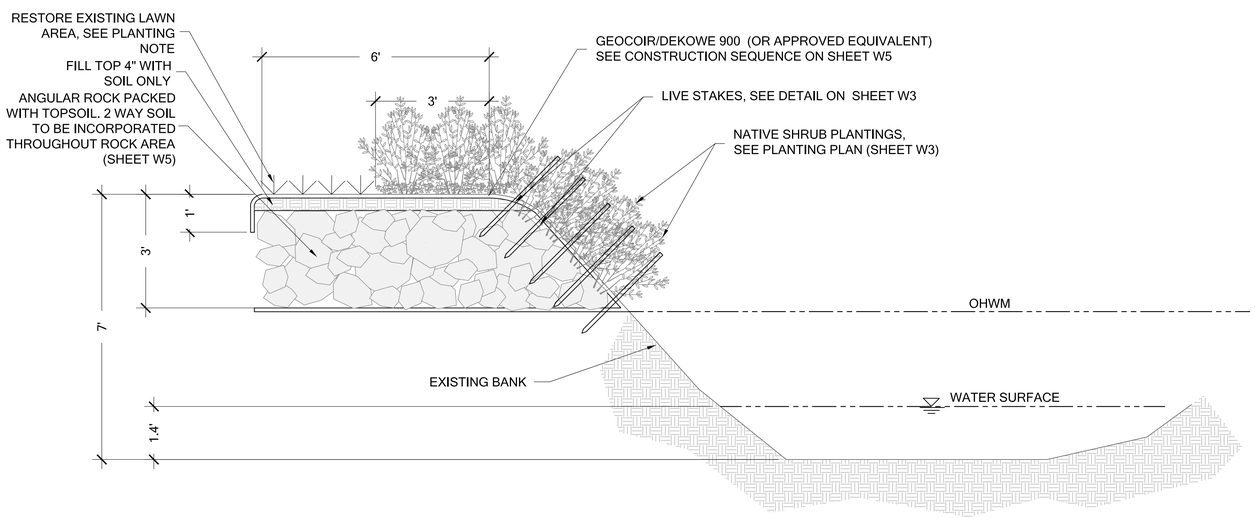

2 PROPOSED BANK STABILIZATION CROSS SECTION

Scale: 1/2" = 1'-0" (IF PLOTTED AT 22 X 34)

0 2' 4' 8'

BANK STABILIZATION SECTIONS

AS NOTED

© Copyright- The Watershed Company

THE WATERSHED COMPANY
750 Sixth Street South
Kirkland WA 98033
p 425.822.5242 f 425.827.8136
www.watershedco.com
Science & Design

COAL CREEK BANK STABILIZATION
BANK STABILIZATION PLAN
SPATZ RESIDENCE
5 SKAGIT KY
BELLEVUE, WA

SUBMITTALS & REVISIONS

NO.	DATE	DESCRIPTION	BY
1	11-11-13	REVIEW SET	GS
2	11-20-13	REVIEW SET	MSF

SHEET SIZE:
ORIGINAL PLAN IS 22"X34" .
SCALE ACCORDINGLY.

PROJECT MANAGER: KB
DESIGNED: GJ, GS
DRAFTED: GS
CHECKED: MG
JOB NUMBER:
130833
SHEET NUMBER:
W2OF 5

DATE 7/7/2008 | PRINTED BY MARINA FRENGS | FILENAME 130833 - COAL CREEK SPATZ.DWG

NOTES:
1. INSTALL CUTTING A MIN. OF 2/3RDS INTO SOIL
2. INSURE THAT BUDS ARE POINTING UP
3. FIRM UP SOIL AROUND INSTALLED CUTTING
4. WATER CUTTINGS AFTER PLANTING

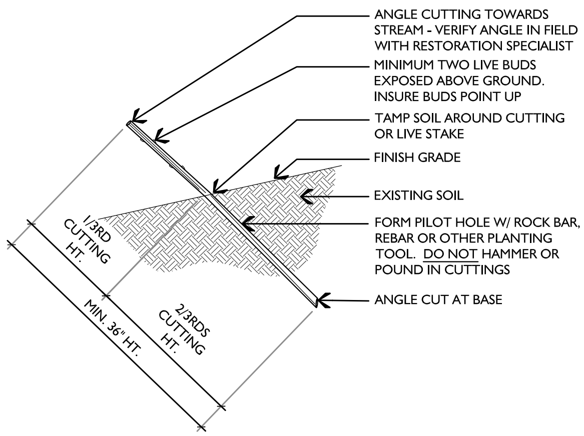

A LIVE STAKE PLANTING DETAIL
NTS

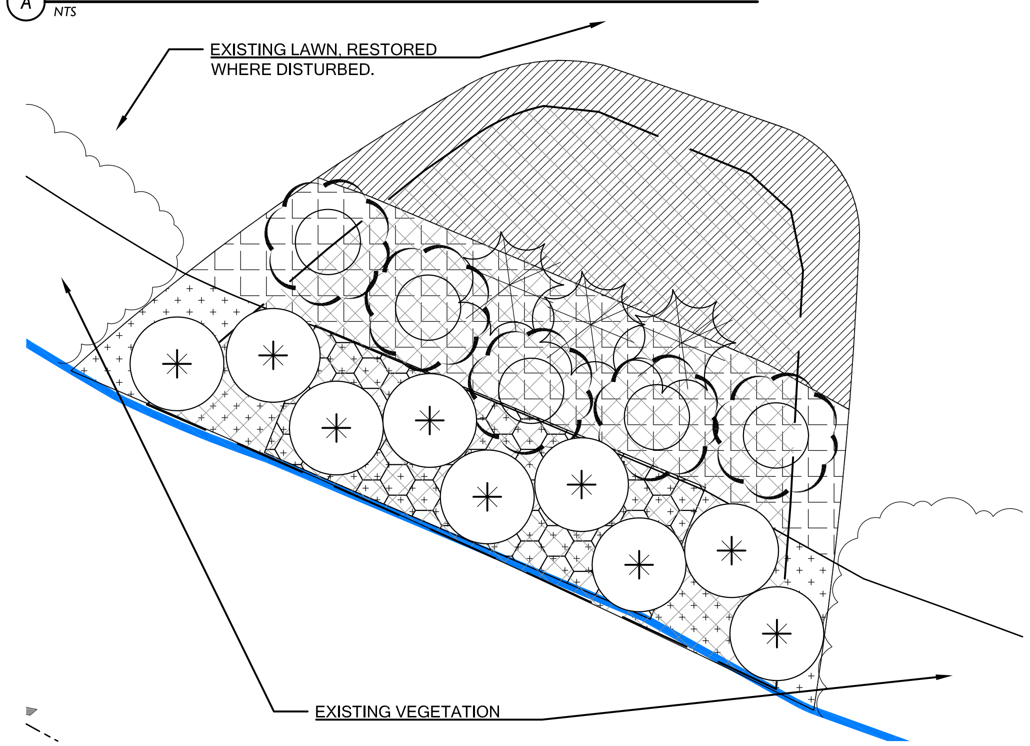

PLANTING PLAN

SCALE: 1" = 2'-0" (IF PLOTTED AT 22 X 34)

0 2' 4' 8'

PLANTING NOTES

1. Native plant installation shall occur between September 15th and December 15th during frost-free periods only for best survival.
2. Remove any and all invasive weeds and their roots from the planting area. Species targeted for removal include English ivy and Himalayan blackberry.
3. Locate all existing utilities within the limit of work. The contractor is responsible for any utility damage as a result of the landscape construction.
4. Loosen any compacted soils in the planting area before securing the top of the geotextile fabric.
5. Layout plant material per plan for inspection by the restoration professional. Plant substitutions will NOT be allowed without the approval of the restoration professional.
6. Cut holes in the geotextile fabric and install plants per planting details. See this sheet for planting details and plant installation specifications.
7. Spread lawn seed mixed with topsoil.
8. Water each plant thoroughly to remove air pockets.
9. Install a temporary irrigation system capable of delivering 2" of water per week to the entire planted area.

The landscape contractor shall maintain all plant material until final inspection and approval by the Owner or Owner's representative. All plantings and workmanship shall be guaranteed for one year following final owner acceptance

PLANT SCHEDULE

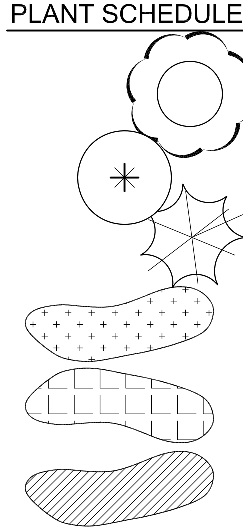

SCIENTIFIC / COMMON NAME	QTY	SIZE
SHRUBS - *ALL SHRUBS TO BE HEALTHY, FULL & VIGOROUS.*		
PHYSOCARPUS CAPITATUS PACIFIC NINEBARK	5	1 GAL
ROSA PISOCARPA PEA-FRUITED ROSE	9	1 GAL
VACCINIUM OVATUM EVERGREEN HUCKLEBERRY	3	1 GAL
PERENNIALS/GROUNDCOVER - *ALL TO BE HEALTHY & VIGOROUS.*		
CORNUS SERICEA RED-OSIER DOGWOOD	30	36" LIVE STAKES @ 12" OC
FRAGARIA CHILOENSIS SAND STRAWBERRY	13	2-3" POTS @ 18" OC
LAWN		MATCH EXISTING

PLANT INSTALLATION SPECIFICATIONS

NOTE: THESE SPECIFICATIONS ARE A LEGALLY BINDING CONTRACT

GENERAL NOTES

QUALITY ASSURANCE
1. PLANTS SHALL MEET OR EXCEED THE SPECIFICATIONS OF FEDERAL, STATE, AND LOCAL LAWS REQUIRING INSPECTION FOR PLANT DISEASE AND INSECT CONTROL.
2. PLANTS SHALL BE HEALTHY, VIGOROUS, AND WELL-FORMED, WITH WELL DEVELOPED, FIBROUS ROOT SYSTEMS, FREE FROM DEAD BRANCHES OR ROOTS. PLANTS SHALL BE FREE FROM DAMAGE CAUSED BY TEMPERATURE EXTREMES, LACK OR EXCESS OF MOISTURE, INSECTS, DISEASE, AND MECHANICAL INJURY. PLANTS IN LEAF SHALL BE WELL FOLIATED AND OF GOOD COLOR. PLANTS SHALL BE HABITUATED TO THE OUTDOOR ENVIRONMENTAL CONDITIONS INTO WHICH THEY WILL BE PLANTED (HARDENED-OFF).
3. TREES WITH DAMAGED, CROOKED, MULTIPLE OR BROKEN LEADERS WILL BE REJECTED. WOODY PLANTS WITH ABRASIONS OF THE BARK OR SUNSCALD WILL BE REJECTED.

DEFINITIONS
1. PLANTS/PLANT MATERIALS. PLANTS AND PLANT MATERIALS SHALL INCLUDE ANY LIVE PLANT MATERIAL USED ON THE PROJECT. THIS INCLUDES BUT IS NOT LIMITED TO CONTAINER GROWN, B&B OR BAREROOT PLANTS; LIVE STAKES AND FASCINES (WATTLES); TUBERS, CORMS, BULBS, ETC.; SPRIGS, PLUGS, AND LINERS.
2. CONTAINER GROWN. CONTAINER GROWN PLANTS ARE THOSE WHOSE ROOTBALLS ARE ENCLOSED IN A POT OR BAG IN WHICH THAT PLANT GREW.

SUBSTITUTIONS
1. IT IS THE CONTRACTOR'S RESPONSIBILITY TO OBTAIN SPECIFIED MATERIALS IN ADVANCE IF SPECIAL GROWING, MARKETING OR OTHER ARRANGEMENTS MUST BE MADE IN ORDER TO SUPPLY SPECIFIED MATERIALS.
2. SUBSTITUTION OF PLANT MATERIALS NOT ON THE PROJECT LIST WILL NOT BE PERMITTED UNLESS AUTHORIZED IN WRITING BY THE LANDSCAPE ARCHITECT / CONSULTANT.
3. IF PROOF IS SUBMITTED THAT ANY PLANT MATERIAL SPECIFIED IS NOT OBTAINABLE, A PROPOSAL WILL BE CONSIDERED FOR USE OF THE NEAREST EQUIVALENT SIZE OR ALTERNATIVE SPECIES, WITH CORRESPONDING ADJUSTMENT OF CONTRACT PRICE.
4. SUCH PROOF WILL BE SUBSTANTIATED AND SUBMITTED IN WRITING TO THE CONSULTANT AT LEAST 30 DAYS PRIOR TO START OF WORK UNDER THIS SECTION.

INSPECTION
1. PLANTS SHALL BE SUBJECT TO INSPECTION AND APPROVAL BY THE CONSULTANT FOR CONFORMANCE TO SPECIFICATIONS, EITHER AT TIME OF DELIVERY ON-SITE OR AT THE GROWER'S NURSERY. APPROVAL OF PLANT MATERIALS AT ANY TIME SHALL NOT IMPAIR THE SUBSEQUENT RIGHT OF INSPECTION AND REJECTION DURING PROGRESS OF THE WORK.
2. PLANTS INSPECTED ON SITE AND REJECTED FOR NOT MEETING SPECIFICATIONS MUST BE REMOVED IMMEDIATELY FROM SITE OR RED-TAGGED AND REMOVED AS SOON AS POSSIBLE.
3. THE CONSULTANT MAY ELECT TO INSPECT PLANT MATERIALS AT THE PLACE OF GROWTH. AFTER INSPECTION AND ACCEPTANCE, THE CONSULTANT MAY REQUIRE THE INSPECTED PLANTS BE LABELED AND RESERVED FOR PROJECT. SUBSTITUTION OF THESE PLANTS WITH OTHER INDIVIDUALS, EVEN OF THE SAME SPECIES AND SIZE, IS UNACCEPTABLE.

MEASUREMENTS OF PLANTS
1. PLANTS SHALL CONFORM TO SIZES SPECIFIED UNLESS SUBSTITUTIONS ARE MADE AS OUTLINED IN THIS CONTRACT.
2. HEIGHT AND SPREAD DIMENSIONS SPECIFIED REFER TO MAIN BODY OF PLANT AND NOT BRANCH OR ROOT TIP TO TIP. PLANT DIMENSIONS SHALL BE MEASURED WHEN THEIR BRANCHES OR ROOTS ARE IN THEIR NORMAL POSITION.
3. WHERE A RANGE OF SIZE IS GIVEN, NO PLANT SHALL BE LESS THAN THE MINIMUM SIZE AND AT LEAST 50% OF THE PLANTS SHALL BE AS LARGE AS THE MEDIAN OF THE SIZE RANGE. (EXAMPLE: IF THE SIZE RANGE IS 12" TO 18", AT LEAST 50% OF PLANTS MUST BE 15" TALL.)

SUBMITTALS

PROPOSED PLANT SOURCES
1. WITHIN 45 DAYS AFTER AWARD OF THE CONTRACT, SUBMIT A COMPLETE LIST OF PLANT MATERIALS PROPOSED TO BE PROVIDED DEMONSTRATING CONFORMANCE WITH THE REQUIREMENTS SPECIFIED. INCLUDE THE NAMES AND ADDRESSES OF ALL GROWERS AND NURSERIES.

PRODUCT CERTIFICATES
1. PLANT MATERIALS LIST - SUBMIT DOCUMENTATION TO CONSULTANT AT LEAST 30 DAYS PRIOR TO START OF WORK UNDER THIS SECTION THAT PLANT MATERIALS HAVE BEEN ORDERED. ARRANGE PROCEDURE FOR INSPECTION OF PLANT MATERIAL WITH CONSULTANT AT TIME OF SUBMISSION.
2. HAVE COPIES OF VENDOR'S OR GROWERS' INVOICES OR PACKING SLIPS FOR ALL PLANTS ON SITE DURING INSTALLATION. INVOICE OR PACKING SLIP SHOULD LIST SPECIES BY SCIENTIFIC NAME, QUANTITY, AND DATE DELIVERED (AND GENETIC ORIGIN IF THAT INFORMATION WAS PREVIOUSLY REQUESTED).

DELIVERY, HANDLING, & STORAGE

NOTIFICATION
CONTRACTOR MUST NOTIFY CONSULTANT 48 HOURS OR MORE IN ADVANCE OF DELIVERIES SO THAT CONSULTANT MAY ARRANGE FOR INSPECTION.

PLANT MATERIALS
1. TRANSPORTATION - DURING SHIPPING, PLANTS SHALL BE PACKED TO PROVIDE PROTECTION AGAINST CLIMATE EXTREMES, BREAKAGE AND DRYING. PROPER VENTILATION AND PREVENTION OF DAMAGE TO BARK, BRANCHES, AND ROOT SYSTEMS MUST BE ENSURED.
2. SCHEDULING AND STORAGE - PLANTS SHALL BE DELIVERED AS CLOSE TO PLANTING AS POSSIBLE. PLANTS IN STORAGE MUST BE PROTECTED AGAINST ANY CONDITION THAT IS DETRIMENTAL TO THEIR CONTINUED HEALTH AND VIGOR.
3. HANDLING - PLANT MATERIALS SHALL NOT BE HANDLED BY THE TRUNK, LIMBS, OR FOLIAGE BUT ONLY BY THE CONTAINER, BALL, BOX, OR OTHER PROTECTIVE STRUCTURE, EXCEPT BAREROOT PLANTS SHALL BE KEPT IN BUNDLES UNTIL PLANTING AND THEN HANDLED CAREFULLY BY THE TRUNK OR STEM.
4. LABELS - PLANTS SHALL HAVE DURABLE, LEGIBLE LABELS STATING CORRECT SCIENTIFIC NAME AND SIZE. TEN PERCENT OF CONTAINER GROWN PLANTS IN INDIVIDUAL POTS SHALL BE LABELED. PLANTS SUPPLIED IN FLATS, RACKS, BOXES, BAGS, OR BUNDLES SHALL HAVE ONE LABEL PER GROUP.

WARRANTY

PLANT WARRANTY
PLANTS MUST BE GUARANTEED TO BE TRUE TO SCIENTIFIC NAME AND SPECIFIED SIZE, AND TO BE HEALTHY AND CAPABLE OF VIGOROUS GROWTH.

REPLACEMENT
1. PLANTS NOT FOUND MEETING ALL OF THE REQUIRED CONDITIONS MUST BE REMOVED FROM SITE AND REPLACED IMMEDIATELY AT THE CONSULTANT'S DISCRETION.
2. PLANTS NOT SURVIVING AFTER ONE YEAR TO BE REPLACED AT THE CONTRACTOR'S EXPENSE.

PLANT MATERIAL

GENERAL
1. PLANTS SHALL BE NURSERY GROWN IN ACCORDANCE WITH GOOD HORTICULTURAL PRACTICES UNDER CLIMATIC CONDITIONS SIMILAR TO OR MORE SEVERE THAN THOSE OF THE PROJECT SITE.
2. PLANTS SHALL BE TRUE TO SPECIES AND VARIETY OR SUBSPECIES. NO CULTIVARS OR NAMED VARIETIES SHALL BE USED UNLESS SPECIFIED AS SUCH.

QUANTITIES
SEE PLANT LIST ON ACCOMPANYING PLANS.

ROOT TREATMENT
1. CONTAINER GROWN PLANTS (INCLUDES PLUGS): PLANT ROOT BALLS MUST HOLD TOGETHER WHEN THE PLANT IS REMOVED FROM THE POT, EXCEPT THAT A SMALL AMOUNT OF LOOSE SOIL MAY BE ON THE TOP OF THE ROOTBALL.
2. PLANTS MUST NOT BE ROOT-BOUND; THERE MUST BE NO CIRCLING ROOTS PRESENT IN ANY PLANT INSPECTED.
3. ROOTBALLS THAT HAVE CRACKED OR BROKEN WHEN REMOVED FROM THE CONTAINER SHALL BE REJECTED.

© Copyright- The Watershed Company

THE WATERSHED COMPANY
750 Sixth Street South
Kirkland WA 98033
p 425.822.5242 f 425.827.8136
www.watershedco.com
Science & Design

COAL CREEK BANK STABILIZATION

BANK STABILIZATION PLAN
SPATZ RESIDENCE

5 SKAGIT KY
BELLEVUE, WA

SUBMITTALS & REVISIONS

NO.	DATE	DESCRIPTION	BY
1	11-11-13	REVIEW SET	GS
2	11-20-13	REVIEW SET	MSF

SHEET SIZE:
ORIGINAL PLAN IS 22"X34". SCALE ACCORDINGLY.

PROJECT MANAGER: KB
DESIGNED: GJ, GS
DRAFTED: GS
CHECKED: MG
JOB NUMBER:
130833
SHEET NUMBER:
W3OF 5

DATE 7/7/2008 | PRINTED BY GRACE SINAGA | FILENAME 130833 - COAL CREEK SPATZ.DWG

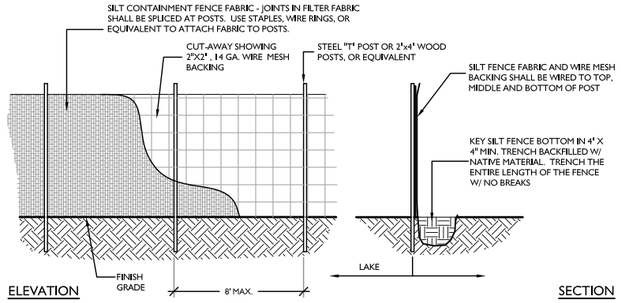

SILT FENCE MAINTENANCE STANDARDS:

1. ANY DAMAGE SHALL BE REPAIRED IMMEDIATELY.
2. SEDIMENT SHALL BE REMOVED WHEN ACCUMULATION EXCEEDS 6" IN DEPTH.

(A) SILT FENCE DETAIL

NTS

NOTES

1. COIR LOG OR STRAW WATTLE SHALL BE INSTALLED PRIOR TO PLACEMENT OF HUMMOCK SOIL FROM STREAM EXCAVATION.
2. COIR LOG OR STRAW WATTLE SHALL BE 9 INCH IN DIAMETER.
3. STAKING: WOOD STAKES TO SECURE THE COIR LOG OR STRAW WATTLE IS RECOMMENDED. BE SURE TO USE A STAKE THAT IS LONG ENOUGH TO PROTRUDE SEVERAL INCHES ABOVE THE COIR LOG OR STRAW WATTLE. 18" IS A GOOD LENGTH FOR HARD, ROCKY SOIL. FOR SOFT LOAMY SOIL USE A 24" STAKE.
4. WHEN INSTALLING RUNNING LENGTHS OF COIR LOG OR STRAW WATTLE, BUTT THE SECOND LOG TIGHTLY AGAINST THE FIRST, DO NOT OVERLAP THE ENDS.
5. STAKE THE LOGS OR WATTLES AT EACH END AND THREE FEET ON CENTER. STAKES SHOULD BE DRIVEN OUTSIDE THE THE COIR LOG OR STRAW WATTLE, BUT CLOSE ENOUGH TO THE LOG OR WATTLE TO HELP HOLD IT IN PLACE, LEAVING 2 - 3 INCHES OF THE STAKE PROTRUDING ABOVE THE COIR LOG OR STRAW WATTLE. A HEAVY SEDIMENT LOAD WILL TEND TO PICK UP THE COIR LOG OR STRAW WATTLE AND COULD PULL IT OFF THE STAKES IF THEY ARE DRIVEN DOWN TOO LOW.
6. WHEN COIR LOG OR STRAW WATTLE ARE USED FOR FLAT GROUND APPLICATIONS, DRIVE THE STAKES STRAIGHT DOWN; WHEN INSTALLING COIR LOG OR STRAW WATTLE ON SLOPES, DRIVE THE STAKES PERPENDICULAR TO THE SLOPE. DRIVE THE FIRST END STAKE OF THE SECOND COIR LOG OR STRAW WATTLE AT AN ANGLE TOWARD THE FIRST COIR LOG OR STRAW WATTLE IN ORDER TO HELP ABUT THEM TIGHTLY TOGETHER.

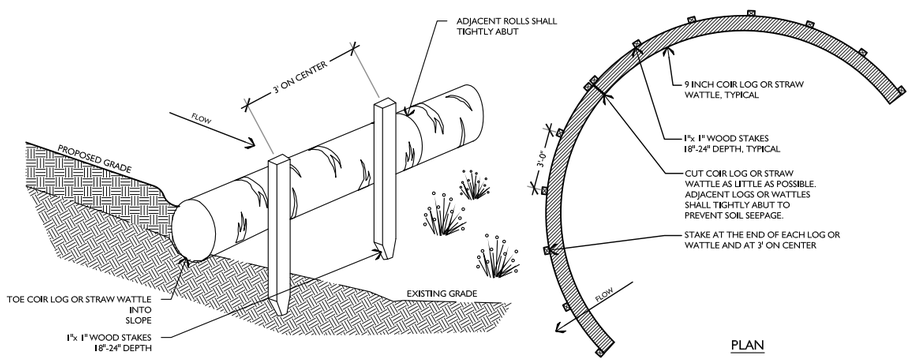

(B) STRAW WATTLE

NTS

CLEARING AND GRADING STANDARD NOTES

1. ALL CLEARING & GRADING CONSTRUCTION MUST BE IN ACCORDAANCE WITH CITY OF BELLEVUE (COB) *CLEARING & GRADING CODE, CLEARING & GRADING EROSION CONTROL STANDARD DETAILS (EC-1 THROUGH EC-23), DEVELOPMENT STANDARDS, LAND USE CODE, UNIFORM BUILDING CODE* , PERMIT CONDITIONS, AND ALL OTHER APPLICABLE CODES, ORDINANCES, AND STANDARDS. THE DESIGN ELEMENTS WITHIN THESE PLANS HAVE BEEN REVIEWED ACCORDING TO THESE REQUIREMENTS. ANY VARIANCE FROM ADOPTED EROSION CONTROL STANDARDS IS NOT ALLOWED UNLESS SPECIFICALLY APPROVED BY THE CITY OF BELLEVUE DEPARTMENT OF PLANNING & COMMUNITY DEVELOPMENT (PCD) PRIOR TO CONSTRUCTION.
   IT SHALL BE THE SOLE RESPONSIBILITY OF THE APPLICANT AND THE PROFESSIONAL CIVIL ENGINEER TO CORRECT ANY ERROR, OMISSION, OR VARIATION FROM THE ABOVE REQUIREMENTS FOUND IN THESE PLANS. ALL CORRECTIONS SHALL BE AT NO ADDITIONAL COST OR LIABILITY TO THE COB. ALL DETAILS FOR STRUCTURAL WALLS, ROCKERIES OVER FOUR FEET IN HEIGHT, GEOGRID REINFORCED ROCKERIES AND GEOGRID REINFORCED MODULAR BLOCK WALLS, MUST BE STAMPED BY A PROFESSIONAL ENGINEER.
2. A COPY OF THE APPROVED PLANS MUST BE ON-SITE DURING CONSTRUCTION. THE APPLICANT IS RESPONSIBLE FOR OBTAINING ANY OTHER REQUIRED OR RELATED PERMITS PRIOR TO BEGINNING CONSTRUCTION.
3. ALL LOCATIONS OF EXISTING UTILITIES HAVE BEEN ESTABLISHED BY FIELD SURVEY OR OBTAINED FROM AVAILABLE RECORDS AND SHOULD, THEREFORE, BE CONSIDERED ONLY APPROXIMATE AND NOT NECESSARILY COMPLETE. IT IS THE SOLE RESPONSIBILITY OF THE CONTRACTOR TO INDEPENDENTLY VERIFY THE ACCURACY OF ALL UTILITY LOCATIONS AND TO DISCOVER AND AVOID ANY OTHER UTILITIES NOT SHOWN WHICH MAY BE AFFECTED BY THE IMPLEMENTATION OF THIS PLAN.
4. THE AREA TO BE CLEARED AND GRADED MUST FLAGGED BY THE CONTRACTOR AND APPROVED BY THE CLEARING AND GRADING INSPECTOR PRIOR TO BEGINNING ANY WORK ON THE SITE.
5. A REINFORCED SILT FENCE MUST BE INSTALLED IN ACCORDANCE WITH COB EC-5 AND SHALL BE LOCATED AS SHOWN ON THE APPROVED PLANS OR PER THE CLEARING AND GRADING INSPECTOR, ALONG SLOPE CONTOURS AND DOWN SLOPE FROM THE BUILDING SITE.
6. A HARD-SURFACE CONSTRUCTION ACCESS PAD IS REQUIRED PER CLEARING & GRADING STANDARD DETAIL EC-1 OR EC-2. THIS PAD MUST REMAIN IN PLACE UNTIL PAVING IS INSTALLED.
7. CLEARING SHALL BE LIMITED TO THE AREAS WITHIN THE APPROVED DISTURBANCE LIMITS. EXPOSED SOILS MUST BE COVERED AT THE END OF EACH WORKING DAY WHEN WORKING FROM OCTOBER 1ST THROUGH APRIL 30TH. FROM MAY 1ST THROUGH SEPTEMBER 30TH, EXPOSED SOILS MUST BE COVERED AT THE END OF EACH CONSTRUCTION WEEK AND ALSO AT THE THREAT OF RAIN.
8. ANY EXCAVATED MATERIAL REMOVED FROM THE CONSTRUCTION SITE AND DEPOSITED ON PROPERTY WITHIN THE CITY LIMITS MUST BE DONE IN COMPLIANCE WITH A VALID CLEARING & GRADING PERMIT. LOCATIONS FOR THE MOBILIZATION AREA AND STOCKPILED MATERIAL MUST BE APPROVED BY THE CLEARING AND GRADING INSPECTOR AT LEAST 24 HOURS IN ADVANCE OF ANY STOCKPILING.
9. TO REDUCE THE POTENTIAL FOR EROSION OF EXPOSED SOILS, OR WHEN RAINY SEASON CONSTRUCTION IS PERMITTED, THE FOLLOWING BEST MANAGEMENT PRACTICES (BMPS) ARE REQUIRED.
   - PRESERVE NATURAL VEGETATION FOR AS LONG AS POSSIBLE OR AS REQUIRED BY THE CLEARING AND GRADING INSPECTOR.
   - PROTECT EXPOSED SOIL USING PLASTIC (EC-14), EROSION CONTROL BLANKETS, STRAW OR MULCH (COB GUIDE TO MULCH MATERIALS, RATES, AND USE CHART), OR AS DIRECTED BY THE CLEARING AND GRADING INSPECTOR.
   - INSTALL CATCH BASIN INSERTS AS REQUIRED BY THE CLEARING AND GRADING INSPECTOR OR PERMIT CONDITIONS OF APPROVAL.
   - INSTALL A TEMPORARY SEDIMENT POND, A SERIES OF SEDIMENTATION TANKS, TEMPORARY FILTER VAULTS, OR OTHER SEDIMENT CONTROL FACILITIES. INSTALLATION OF EXPOSED AGGREGATE SURFACES REQUIRES A SEPARATE EFFLUENT COLLECTION POND ONSITE.
10. FINAL SITE GRADING MUST DIRECT DRAINAGE AWAY FROM ALL BUILDING STRUCTURES AT A MINIMUM 2% SLOPE, PER THE *UNIFORM BUILDING CODE* .
11. THE CONTRACTOR MUST MAINTAIN A SWEEPER ON SITE DURING EARTHWORK AND IMMEDIATELY REMOVE SOIL THAT HAS BEEN TRACKED ONTO PAVED AREAS AS RESULT OF CONSTRUCTION.
12. TURBIDITY MONITORING MAY BE REQUIRED AS A CONDITION OF CLEARING AND GRADING PERMIT APPROVAL. IF REQUIRED, TURBIDITY MONITORING MUST BE PERFORMED IN ACCORDANCE WITH THE APPROVED TURBIDITY MONITORING PLAN AND AS DIRECTED BY THE CLEARING AND GRADING INSPECTOR. MONITORING MUST CONTINUE DURING SITE (EARTHWORK) CONSTRUCTION UNTIL THE FINAL SIGN-OFF BY THE CLEARING AND GRADING INSPECTOR.
13. ANY PROJECT THAT IS SUBJECT TO RAINY SEASON RESTRICTIONS WILL NOT BE ALLOWED TO PERFORM CLEARING AND GRADING ACTIVITIES WITHOUT WRITTEN APPROVAL FROM THE PCD DIRECTOR. THE RAINY SEASON EXTENDS FROM NOVEMBER 1ST THROUGH APRIL 30TH, AS DEFINED IN SECTION 23.76.093A OF THE CLEARING AND GRADING CODE.

TESC DETAILS AND NOTES

AS NOTED

© Copyright- The Watershed Company

THE WATERSHED COMPANY
750 Sixth Street South
Kirkland WA 98033
p 425.822.5242 f 425.827.8136
www.watershedco.com
Science & Design

COAL CREEK BANK STABILIZATION
BANK STABILIZATION PLAN
SPATZ RESIDENCE
5 SKAGIT KY
BELLEVUE, WA

SUBMITTALS & REVISIONS

NO.	DATE	DESCRIPTION	BY
1	11-11-13	REVIEW SET	GS
2	11-20-13	REVIEW SET	MSF

SHEET SIZE:
ORIGINAL PLAN IS 22"X34" .
SCALE ACCORDINGLY.

PROJECT MANAGER: KB
DESIGNED: GJ, GS
DRAFTED: GS
CHECKED: MG
JOB NUMBER: 130833
SHEET NUMBER: W4OF 5

DATE 7/7/2008 | PRINTED BY | FILENAME GRACE SINNAR 130833 - COAL CREEK SPATZ.DWG

MONITORING PROGRAM

Goals and Performance Standards

The following goals and performance standards will be used to measure project success over the monitoring period.

Goals

1) Within the proposed restoration area, establish dense native vegetation that is appropriate to the eco-region and site.
2) Where indicated on the plan, areas within the restoration area will remain substantially vegetated with a preponderance of native plants and will contain little invasive or noxious weed cover.
3) Improve native vegetation structure in the riparian corridor.

Performance Standards

The standards listed below will be used to judge the success of the installation over time. If performance standards are met at the end of Year 3, the site will then be deemed successful and the performance security bond will be eligible for release by the City of Bellevue.

1) Survival: Achieve 100% survival of installed plants by the end of Year 1. This standard can be met through plant establishment or through replanting as necessary to achieve the required numbers.
2) Native cover:
   a. Achieve 80% understory cover of native shrubs by Year 3. Native volunteer species may count towards this cover standard.
3) Species diversity: Establish at least two native shrub species and one native groundcover species by Year 3. Native volunteer species may count towards this standard.
4) Invasive cover: Aerial cover for all non-native, invasive and noxious weeds within the planting areas will not exceed 10% at any year during the monitoring period. Invasive plants include ivy species (*Hedera* spp.), Himalayan blackberry (*Rubus armeniacus*), cut leaf blackberry (*Rubus laciniatus*) and English holly (*Ilex aquifolium*). Invasive plants are defined as those listed by the Washington State Noxious Weed Control Board as Class A, B, or C.

Maintenance and Monitoring Plan

This monitoring program is designed to measure progress towards the stated goals and performance standards within the required 3-year monitoring period.

Monitoring Methods

This monitoring program is designed to track the success of the restoration site over time and to measure the degree to which it is meeting the performance standards outlined in the preceding section.

An as-built plan will be prepared by the **restoration professional** (Watershed Company [(425) 822-5242] personnel, or other persons qualified to evaluate environmental restoration projects) prior to the beginning of the monitoring period. The as-built plan will be a mark-up of the planting plans included in this plan set. The as-built plan will document any departures in plant placement or other components from the proposed plan.

Monitoring will take place once annually in the fall for three years. Year-1 monitoring will commence in the first fall subsequent to installation.

The formal monitoring visit shall record and report the following in an annual report submitted to the City of Bellevue:

1) Visual assessment of the overall site.
2) Year-1 counts of live and dead plants by species. Year-2 and Year-3 counts of established native trees by species.
3) Counts of dead plants where mortality is significant in any monitoring year.
4) Visual estimate of native shrub cover.
5) Visual estimate of native groundcover.
6) Estimate of non-native, invasive weed cover within planting areas.
7) Tabulation of established native species, including both planted and volunteer species.
8) Photographic documentation from at least three fixed reference points.
9) Any intrusions into or clearing of the planting areas, vandalism, or other actions that impair the intended functions of the restoration area.
10) Recommendations for maintenance or repair of any portion of the restoration area.

Construction Notes and Specifications

Note: specifications for items in **bold** can be found below under "Material Specifications and Definitions."

Note: The Watershed Company [(425) 822-5242] personnel, or other persons qualified to evaluate environmental restoration projects, will monitor:

1. All site preparation
   a. Weed and stone paver removal
   b. Soil preparation.
2. Plant material inspection
   a. Plant material delivery inspection.
   b. 100% plant installation inspection.

General Work Sequence

Site preparation and plant installation should follow the planting notes and installation specifications on Sheet 5 of this plan set.

Material Specifications and Definitions

1. **Compost:** Cedar Grove Compost or equivalent product. 100% vegetable compost with no appreciable quantities of sand, gravel, sawdust, or other non-organic materials.
2. **Fertilizer:** Slow release, granular PHOSPHOROUS-FREE fertilizer. Follow manufacturer's instructions for application. Keep fertilizer in a weather-tight container while on site. Note that fertilizer is to be applied only in Years 2 and 3 and not in the first year.
3. **Irrigation system:** Automated system capable of delivering at least one inches of water per week from June 1 through September 30 for the first two years following installation.
4. **Restoration Professional:** Watershed Company [(425) 822-5242] personnel, or other persons qualified to evaluate environmental restoration projects.

Contingencies

If there is a significant problem with the restoration areas meeting performance standards, a contingency plan will be developed and implemented. Contingency plans can include, but are not limited to: soil amendment; additional plant installation; and plant substitutions of type, size, quantity, and location.

Maintenance

The site will be maintained in accordance with the following instructions for three years following completion of the construction.

1) Follow the recommendations noted in the previous monitoring site visit.
2) General weeding for all planted areas:
   a. At least twice yearly, remove all competing weeds and weed roots from beneath each installed plant and any desirable volunteer vegetation to a distance of 18 inches from the main plant stem. Weeding should occur at least twice during the spring and summer. Frequent weeding will result in lower mortality, lower plant replacement costs, and increased likelihood that the plan meets performance standards by Year 3.
   b. More frequent weeding may be necessary depending on weed conditions that develop after plan installation.
   c. Do not weed the area near the plant bases with string trimmer (weed whacker/weed eater). Native plants are easily damaged or killed, and weeds easily recover after trimming.
3) Apply slow release granular fertilizer to each installed plant annually in the spring (by June 1) of Years 2 and 3..
4) Replace each plant found dead in the summer monitoring visits during the upcoming fall/winter dormant season (October 15 to March 1).
5) The homeowner will ensure that water is provided for the entire planted area with a minimum of 2 inches of water provided per week from June 1 through September 30 for the first two years following installation through the operation of a temporary irrigation system. Less water is needed during March, April, May and October.

CONSTRUCTION SEQUENCE OF COAL CREEK BANK STABILIZATION

1. VERIFY ALL NECESSARY SITE EASEMENTS AND ACCESS AUTHORIZATIONS FOR ALL CONSTRUCTION ACTIVITIES.
2. HOLD A PRE-CONSTRUCTION MEETING WITH HOMEOWNER; CONTRACTOR, DESIGNER (THE WATERSHED COMPANY), CITY OF BELLEVUE INSPECTOR (IF REQUIRED); AND/OR INVITEES.
3. ENSURE THAT COPIES OF ALL REQUIRED PERMITS AND AUTHORIZATIONS FROM LOCAL, STATE AND FEDERAL AGENCIES, WITH CONDITIONS, ARE PRESENT ON-SITE FOR THE DURATION OF THE WORK.
4. EQUIPMENT USED ON THIS PROJECT MUST BE IN EXCELLENT WORKING CONDITION, WELL MAINTAINED AND COMPLETELY FREE OF FLUID LEAKS OF ANY KIND.
5. BEFORE BEGINNING CONSTRUCTION WORK, ESTABLISH CLEARING LIMITS AND DEFINE THE WORK AREA(S).
6. INSTALL CONSTRUCTION ENTRANCES, EQUIPMENT ACCESS PATHWAYS, STAGING AREAS, SILT FENCING, HIGH VISIBILITY FENCING, AND ANY AND ALL OTHER TEMPORARY EROSION AND SEDIMENTATION CONTROL MEASURES, GENERAL AND SITE-SPECIFIC, AS NOTED ON THE PLANS AND SUPPORTING DOCUMENTS OR AS REQUIRED BY VARIOUS PERMITS AND AUTHORIZATIONS ON PROJECT PERIMETER.
7. LOCATE ANY EXISTING UTILITIES WITHIN THE PROJECT AREA OR ALONG ACCESS ROUTES AND RELOCATE OR PROTECT ANY THAT MAY INTERFERE WITH OR BE DAMAGED BY PROJECT IMPLEMENTATION.
8. IDENTIFY ANY STRUCTURES OR MATERIALS WITHIN THE PROJECT AREA SLATED FOR RELOCATION OR REMOVAL PRIOR TO PROJECT IMPLEMENTATION (SUCH AS SAND BAGS) AND CONDUCT OR ARRANGE FOR THEIR REMOVAL OR RELOCATION. DISPOSE OF THE DEBRIS GENERATED FROM REMOVAL AT AN APPROPRIATE OFF-SITE, UPLAND LOCATION, LANDFILL, OR RECYCLING FACILITY AS APPROPRIATE. IT IS EXPECTED THAT HAND OR SMALL POWER EQUIPMENT WOULD BE USED TO ACCOMPLISH ANY NECESSARY DEMOLITION AND DISPOSAL OF THE DEBRIS.
9. IF NOT ALREADY DONE, ISOLATE THE WORK AREA BY INSTALLING SILT FENCING ALONG THE STREAMBANK AT AN ELEVATION JUST BELOW THE LOWER PROJECT LIMITS (ORDINARY HIGH WATER) AND EXTENDING A MINIMUM OF TEN FEET UPSTREAM AND DOWNSTREAM OF THE PROJECT AREA.
10. EXCAVATE A BENCH AREA ALONG THE UPPER STREAMBANK AND EXTENDING NO LOWER THE ORDINARY HIGH WATER LINE IN THE AREA OF EXISTING UPPER BANK EROSION AND VOIDS IN THE BANK SUCH THAT THE VOIDS ARE ELIMINATED. BENCH DIMENSIONS ARE ANTICIPATED TO BE APPROXIMATELY TEN FEET LONG ALONG THE STREAMBANK, THREE FEET DEEP, AND EXTENDING SIX FEET LANDWARD FROM THE *TOP* OF BANK (WIDER AT THE BENCH LEVEL). EXCAVATION IS TO BE DONE BY HAND, POSSIBLY WITH THE ASSISTANCE OF SMALL POWER EQUIPMENT. STOCKPILE SUITABLE TOPSOIL FOR RE-USE; EXPORT UNSUITABLE OR EXCESS MATERIALS OR PLACE AS DIRECTED BY THE HOMEOWNER OR THEIR REPRESENTATIVE.
11. PLACE GEOCOIR/DEKOWE 900 (OR APPROVED EQUIVALENT) ON THE BENCH AND DRAPED DOWN-SLOPE ALONG THE STREAMBANK. STAKE THE FABRIC IN PLACE ALONG THE LANDWARD EDGE OF THE BENCH USING 1" BY 2" BY 12" WOODEN STAKES SPACED AT 18". AFTER GEOCOIR HAS BEEN INSTALLED, HOLES SHALL BE CUT IN THE MATTING AT THE LOCATIONS WHERE PLANTS ARE TO BE INSTALLED. HOLES SHALL BE THE SIZE OF THE ROOTBALL.
12. RE-BUILD THE STREAMBANK TO APPROXIMATELY ITS FORMER DIMENSIONS ON THE BENCH AREA BY PLACING SPECIFIED ROCK MATERIALS PACKED WITH TOPSOIL. HAND-PLACE THE ROCK IN SINGLE LAYERS AND ALTERNATELY TAMP TOPSOIL FIRMLY INTO PLACE IN THE SPACES BETWEEN THE ROCKS BEFORE PROCEEDING TO THE NEXT LAYER AND SO ON UNTIL THE REQUIRED DIMENSIONS ARE ACHIEVED. THE TOP LAYER OF THE PLACED ROCK AND SOIL SHALL BE 4" OF TOPSOIL, INLAND OF THE TOP OF SLOPE ONLY. IMPORT ADDITIONAL TOPSOIL TO SUPPLEMENT AVAILABLE NATIVE TOPSOIL IN QUALITY OR QUANTITY AS NEEDED.
13. PULL THE GEOCOIR FABRIC UP THE BANK AND OVER THE ENTIRE AREA OF PLACED ROCK AND SOIL, WITH NO BREAKS OR SEAMS. FABRIC IS TO BE FIRMLY TUCKED TO A DEPTH OF AT LEAST 12" BETWEEN THE ROCK AND UNDISTURBED SOIL INTERFACES AND STAKED AT THE UPSTREAM END, THE DOWNSTREAM END, AND THE LANDWARD SIDE. STAKES ARE TO BE INSTALLED SUCH THAT THEY ARE DRIVEN BELOW THE FINISHED GROUND SURFACE IN THE LAWN AREA; THIS MAY REQUIRE HAND-DIGGING A SHALLOW TRENCH IN ORDER TO TUCK THE FABRIC IN AND STAKE IT. STAKE THE UPSTREAM AND DOWNSTREAM ENDS OF THE FILL IN A SIMILAR MANNER, THOUGH STAKES ALONG THE BANK NEED NOT BE COUNTERSUNK. STAKES ARE TO BE 1" BY 2" BY 18" WOODEN STAKES OF WESTERN REDCEDAR, PLACED 12" ON CENTER.
14. PLANT ROOTED NATIVE SHRUB AND GROUNDCOVER STOCK THROUGH THE FABRIC ALONG THE STREAMBANK AS SHOWN ON THE PLANTING PLAN AND DETAILS.
15. DRIVE RED-OSIER DOGWOOD LIVE STAKING THROUGH THE FABRIC ALONG THE UPPER STREAMBANK AS SHOWN ON THE PLANTING PLAN AND DETAILS.
16. SOW LAWN GRASS SEED MIXTURE OVER THE ABOVE-BANK FILLED AREAS AS WELL AS ADJOINING DISTURBED LAWN AND UPPER BANK AREAS. RAKE IN A THIN LAYER OF TOPSOIL, 1 INCH OR LESS, OVER EXPOSED FABRIC IN THE DISTURBED LAWN AREA TO PARTIALLY OBSCURE IT AND BED THE GRASS SEED.
17. CONDUCT SITE CLEAN-UP AND FINAL RAKING AND SMOOTHING OF THE PROJECT AREA TO ACHIEVE A FINISHED, LANDSCAPED APPEARANCE.
18. UPON PROJECT ACCEPTANCE BY THE HOMEOWNER OR DESIGNATED REPRESENTATIVE, REMOVE THE SILT FENCING ALONG THE STREAMBANK AND CONDUCT A FINAL TOUCH-UP DUE TO ANY DISTURBANCE.

ROCK SPECIFICATION

ROCK FOR EROSION AND SCOUR PROTECTION SHALL HAVE A "WELL-GRADED" STRUCTURE THAT MEETS THE REQUIREMENTS FOR SUITABLE SHAPE AND CONFORMS TO THE FOLLOWING GRADING:

APPROXIMATE SIZE (IN)	PERCENT PASSING (SMALLER)
16	100
12	80-95
8	50-80
4	15-50
2	15 MAX

MONITORING PROGRAM AND CONSTRUCTION SEQUENCE

© Copyright- The Watershed Company

THE WATERSHED COMPANY
750 Sixth Street South
Kirkland WA 98033
p 425.822.5242 f 425.827.8136
www.watershedco.com
Science & Design

COAL CREEK BANK STABILIZATION
BANK STABILIZATION PLAN
SPATZ RESIDENCE
5 SKAGIT KY
BELLEVUE, WA

SUBMITTALS & REVISIONS

NO.	DATE	DESCRIPTION	BY
1	11-11-13	REVIEW SET	GS
2	11-20-13	REVIEW SET	MSF

SHEET SIZE:
ORIGINAL PLAN IS 22"X34" .
SCALE ACCORDINGLY.

PROJECT MANAGER: KB
DESIGNED: GJ, GS
DRAFTED: GS
CHECKED: MG
JOB NUMBER: 130833
SHEET NUMBER: W5OF 5

DATE 7/7/2008 | PRINTED BY | FILENAME GRACE SINGH-130833 - COAL CREEK SPATZ.DWG

Attachment 4

March 5, 2014

Heidi Bedwell
City of Bellevue
450 110th Avenue NE
Bellevue, WA 98004
Via email: hbedwell@bellevuewa.gov

Re: Spatz Streambank Stabilization - Coal Creek: 13-135274-LO
The Watershed Company Project No: 130833

Dear Heidi,

Thank you for your email dated February 12, 2014 summarizing comments regarding the Spatz Streambank Stabilization project. In addition to City of Bellevue comments, your email included comments from the Washington Department of Fish and Wildlife (WDFW) and the Muckleshoot Indian Tribe. I'd like to take this opportunity to respond to each of the comments received. Presented below is a detailed response to each comment.

WDFW

For context, I've attached the email correspondence that I had with Larry Fisher. It includes our rationale for the current design as well as his short response. However, I will note that following receipt of Larry's response I had a phone conversation with him where we discussed in more detail the difference in our opinions about appropriate design. Specifically, Larry understands the constraints involved, including limited access and budget, which are preventing us from implementing a larger stream bank restoration project. He has reservations about the long-term success of our current proposal but won't go so far as to deny the project. Rather, he's making his concerns known at this point.

Muckleshoot Indian Tribe

Karen Walter has requested native trees be added to the planting plan. Therefore, in addition to the currently proposed shrubs and groundcover species, we will add two native trees.

City of Bellevue

Below is a response to each of your comments presented in the February 12 email:

- *The level of risk to the primary structure or infrastructure presented by erosion or slope failure and ability of the proposed measure to mitigate that risk;*

  The existing single-family residence is separated from the stream by a low, grass-covered berm. The berm is approximately 2 feet in height and 18 feet wide at the top. The yard area between the house and the stream, including the berm, is mostly lawn with landscaping shrubs around the perimeter. The stream runs bankfull to near the top of the berm on occasion and the yard and lower story of the house are prone to flooding during these occurrences.

  About half way across the site, a section of streambank approximately 10 feet long, 3 feet high, and extending approximately 6 feet into the yard area has experienced erosion along the upper portions of the bank. The lower bank appears to be relatively stable, with erosion occurring primarily near the top of the bank along what would be considered the face of the berm. During high flows the grass covered portion of the upper bank has been undermined, creating a large cavity. The cavity extends more than three feet into the bank, leaving the area susceptible to collapse and further erosion. Because the berm in this area protects the lower-lying areas of the back yard and the home from flooding, further erosion to the top of the bank would result in flooding to the home.

  Continued erosion in this area would eliminate the entire top of bank, which serves as a low berm, and high flows would have a direct path to the house. To remedy this, the proposed plan calls for an area of excavation within the top of the bank just above the ordinary high water mark to remove much of the area where the cavity currently exists. This area would be filled with large rocks and topsoil and then covered with a geotextile fabric. Plantings would then be placed along the streambank side through the fabric both to cover it and also to further stabilize the bank. Overall, the plan is intended to reduce the risk of bank erosion and subsequent flooding of the residence.

- *Whether the cost of avoiding disturbance of the critical area or critical area buffer is substantially disproportionate as compared to the environmental impact of proposed disturbance, including any continued impacts on functions and values over time; and*

  Avoiding disturbance to the critical area buffer would result in continued erosion along the top of the bank, as well as an increased threat of flooding to the residence. Meanwhile, the impact that will result from disturbance to the buffer is minimal. Specifically, all areas of disturbance will be temporary and will be restored with vegetation following construction. Disturbed areas of the

bank will be planted with native shrubs and live stakes, as well as two trees. Upland areas of lawn that are disturbed will be replanted with lawn. Therefore, impacts to buffer functions and values will cease following implementation of the restoration plan and over time the project area will provide an overall lift to the stream and buffer through the addition of native vegetation in areas currently covered with lawn. Therefore, the temporary impact caused by implementation of the project is minimal compared to the risk of flooding to the residence under a no-action scenario.

- *The ability of both permanent and temporary disturbance to be mitigated.*

  All areas of temporary disturbance will be restored with vegetation. Those areas along the bank that are disturbed will be planted with native shrubs and groundcover. Upland areas of lawn that are disturbed will be replanted with lawn following construction. As mitigation for impacts associated with temporary construction activities, two native trees will be planted along the streambank (see below).

- *Planting Plan- I have a concern that the live stakes will survive in the rock material. In addition to what you have provided please revise the planting plan to include at least 2 trees installed on the edge of the stabilization project area. Select appropriate native vegetation from our critical areas handbook as necessary.*

  Two native trees can be added to the edges of the project area. However, we'd like to request that this minor revision be a condition of approval and the plans would therefore be revised at the time of submittal for a Clearing and Grading Permit.

Please let me know if you have any questions or wish to discuss any of these items in more detail.

Sincerely,

Kenny Booth, AICP
Associate Planner

cc: Mark and Jennifer Spatz

Enc.

From: Fisher, Larry D (DFW) <Larry.Fisher@dfw.wa.gov>
Sent: Wednesday, February 19, 2014 9:13 AM
To: Kenny Booth
Cc: Greg Johnston
Subject: RE: File No. 13-135274 Spatz Streambank Stabilization/5 Skagit Key/Coal Creek

Hi Kenny:

I understand that, but I don't see the proposed project as a solution to the problem of the failing bank.

Larry Fisher
WDFW Area Habitat Biologist
1775 12th Ave NW Suite 201
Issaquah, WA 98027
425-313-5683
FAX 425-427-0570
Cell: 425-449-6790
<')){{}}>< <')){{}}><

From: Kenny Booth [mailto:KBooth@watershedco.com]
Sent: Tuesday, February 18, 2014 2:24 PM
To: Fisher, Larry D (DFW)
Cc: Greg Johnston
Subject: FW: File No. 13-135274 Spatz Streambank Stabilization/5 Skagit Key/Coal Creek

Hi Larry,

Heidi Bedwell at the City of Bellevue passed along your comments on the Spatz Streambank Stabilization project on Coal Creek. I've had Greg Johnston provide his thoughts on your concerns below.

I'd also like to add an additional perspective that also drove the design for this particular project. Specifically, site access issues and the overall budget for this project kept us from pursuing a large scale solution that might have involved the entire bank. In large part due to the inability to readily access the problem area with heavy equipment, we steered away from solutions that involved large woody debris. Further, the addition of large woody debris or additional rock below the OHWM would have included the need for a detailed hydraulic analysis to ensure that flood levels would be unchanged and that upstream and downstream properties would not be affected by a channel constriction. Widening of the channel cross section could be needed to compensate for constrictions due to wood or rock in order to prevent such flooding impacts. Instead, in keeping with the budgetary

constraints of the client we are seeking to alleviate the problem (threat of flooding to the residence) by concentrating our efforts along the top of the bank.

Please let me know if you'd like to discuss further.

Thanks,

KENNY BOOTH, AICP
Associate Planner
(425) 822-5242 x209

750 Sixth Street South
Kirkland, WA 98033
watershedco.com

From: Greg Johnston
Sent: Monday, February 17, 2014 5:43 PM
To: Kenny Booth
Subject: FW: File No. 13-135274 Spatz Streambank Stabilization/5 Skagit Key/Coal Creek

Larry:

At the Spatz site, there is some angular rock along the toe of the bank, which is largely obscured by ivy, but little or no ongoing toe erosion which was evident to us. It is not clear from our knowledge or observation that a formal rockery was ever built here or that the placed rock ever extended to near the top-of slope. Granted our history with the site is limited, and ivy obscures much of the bank. Some angular rock could have been placed along the toe of the creek bank without stones being fitted together individually to form a rockery. In any case, as you pointed out, a few angular rocks have worked their way out into the channel.

The bank erosion observed is very limited in extent and is also quite unusual in our experience. A more "normal" or at least usual mode of bank failure would be for the toe to erode first, creating a more vertical bank, and then for portions of the upper bank to fall or slide into the creek, and so on resulting in a widened or migrating channel. As mentioned, in this case, however, there appears to be little or no active toe erosion, and the erosion noted is unusually high on the bank, extending upwards from approximately the OHWM. Erosion occurring only that high up would have to be caused by fairly infrequent flow events. Furthermore, the erosion has taken the unusual form of a couple of cavities under a grassy lawn area extending no more than 8 feet along the top-of-bank and 4 feet in under the grass. Overall, the bank is not particularly unstable in terms of its slumping or caving into the creek, which could result in the channel widening or migrating towards the Spatz residence. Yet, these cavities have formed high up on the bank and in doing so have narrowed the effective top width of a soil

structure serving as a berm protecting the Spatz residence from flooding during times of unusually high creek flows.

Your primary concern seems to be adding more angular rock to the bank, which could end up in the creek if the project is not successful in arresting erosion. To address this concern, we propose to alter the materials specifications for the project to include only rounded, rather than angular, rock such that it would not be problematic if some portion of it did, eventually, end up in the creek. As seen below, we'll also be working with Karen Walter and Heidi Bedwell to address some planting concerns, so it's likely that several native tree specimens may be added to the planting plan.

Let us know if these revisions would be sufficient to allow approval by WDFW or otherwise, if we are on the right track for arriving at a solution.

Thanks,

Greg Johnston

From: HBedwell@bellevuewa.gov [mailto:HBedwell@bellevuewa.gov]
Sent: Wednesday, February 12, 2014 2:25 PM
To: Kenny Booth
Subject: FW: File No. 13-135274 Spatz Streambank Stabilization/5 Skagit Key/Coal Creek

Kenny,
I just realized I hadn't sent these comments on to you for your response (see messages below). In addition to these questions I have the following comments:
1. Performance standards 20.25H.055.m- In addition to the information you provided as part of the application, please provide a response to the following standards:
* The level of risk to the primary structure or infrastructure presented by erosion or slope failure and ability of the proposed measure to mitigate that risk;
* Whether the cost of avoiding disturbance of the critical area or critical area buffer is substantially disproportionate as compared to the environmental impact of proposed disturbance, including any continued impacts on functions and values over time; and
* The ability of both permanent and temporary disturbance to be mitigated.
2. Planting Plan- I have a concern that the live stakes will survive in the rock material. In addition to what you have provided please revise the planting plan to include at least 2 trees installed on the edge of the stabilization project area. Select appropriate native vegetation from our critical areas handbook as necessary.

Please submit this additional information as a revision to the permit using the following revisions/additions form http://www.bellevuewa.gov/pdf/PCD/forms_revadd.pdf

Sincerely,
Heidi M. Bedwell
Senior Planner, Land Use Division
Development Services Department
425-452-4862
www.bellevuewa.gov

From: Karen Walter [mailto:KWalter@muckleshoot.nsn.us]
Sent: Tuesday, January 28, 2014 5:15 PM
To: Fisher, Larry D (DFW); Bedwell, Heidi
Subject: RE: File No. 13-135274 Spatz Streambank Stabilization/5 Skagit Key/Coal Creek

Larry and Heidi,
In addition to the issues that Larry raised in his email below, the planting plan needs modification too as the plants proposed are fairly low growing and will not provide for full riparian functions. Native trees conducive to the soil types would be better and would likely provide more bank stability over the long term than what is proposed. I didn't see any rationale for the species proposed to be planted or alternatively, why trees cannot be planted in the project area.

Thank you,
Karen Walter
Watersheds and Land Use Team Leader

Muckleshoot Indian Tribe Fisheries Division
39015 172nd Ave SE
Auburn, WA 98092
253-876-3116

From: Fisher, Larry D (DFW) [mailto:Larry.Fisher@dfw.wa.gov]
Sent: Thursday, January 23, 2014 10:41 AM
To: Heidi Bedwell
Cc: Karen Walter
Subject: File No. 13-135274 Spatz Streambank Stabilization/5 Skagit Key/Coal Creek

Hi Heidi:

Here are my comments on the DNS for this proposed project.

I am mainly concerned about this project because I don't believe it will stabilize the streambank. The

consultant's documentation indicates there is erosion above the ordinary high water mark (OHWM) and proposes to rebuild that area with large rock, soil, and plantings. There was a lack of discussion of the failing rockery at the site, which was not shown on the project plans.

I believe the bank has suffered some erosion due to failure of the toe of the poorly constructed rockery. The base rocks were not set low enough in elevation to prevent them from being undermined due to scour which resulted from natural stream processes. The rockery has been failing over the years, which is readily evident from the rocks adjacent to it that have fallen into the creek. This rockery needs to be rebuilt or replaced with a properly designed and constructed streambank stabilization project. If the project is constructed as designed, the bank is likely to continue to fail, which may cause the proposed project to fail, resulting in even more riprap in the creek.

It may be that the work proposed is entirely above the OHWM to avoid obtaining a permit from the Army Corps of Engineers. The scope and design of the project may also be due in part to the limited access to the site for equipment.

I am not sure how WDFW will handle this issue, but it seems to warrant more discussion between the permitting agencies.

Larry Fisher
WDFW Area Habitat Biologist
1775 12th Ave NW Suite 201
Issaquah, WA 98027
425-313-5683
FAX 425-427-0570
Cell: 425-449-6790
<')){{}}>< <')){{}}><