City of Bellevue
Development Services Department
Land Use Staff Report

Proposal Name:	Overbrook Construction Slope Buffer Modification
Proposal Address:	9705 NE 1st Street
Proposal Description:	Approval of a Critical Areas Land Use Permit modifying the top of slope buffer to accommodate construction of a new home. The approval is subject to geotechnical engineering design and tree protection requirements.
File Number:	13-122705-LO
Applicant:	Dana Oliver, Overbrook Construction
Decisions Included	Critical Areas Land Use Permit (Process II. 20.30P)
Planner:	David Pyle, Land Use Planner
State Environmental Policy Act Threshold Determination:	Exempt
Director's Decision:	**Approval with Conditions** Michael A. Brennan, Director Development Services Department By: _____ Carol V. Helland, Land Use Director

Application Date:	August 15, 2013
Notice of Application Date:	August 29, 2013
Decision Publication Date:	November 14, 2013
Project Appeal Deadline:	December 2, 2013

For information on how to appeal a proposal, visit Development Services Center at City Hall or call (425) 452-6800. Appeal of the decision must be received in the City's Clerk's Office by 5 PM on the date noted for appeal of the decision.

CONTENTS

I. Proposal Description ..... Pg 3

II. Site Description, Zoning & Land Use Context ..... Pg 4-5

III. Consistency with Land Use Code Requirements ..... Pg 6

IV. Public Notice & Comment ..... Pg 8

V. Summary of Technical Review ..... Pg 8

VI. Changes to Proposal Due to Staff Review ..... Pg 8

VII. Decision Criteria ..... Pg 8-10

VIII. Conclusion and Decision ..... Pg 10-11

IX. Conditions of Approval ..... Pg 11-13

Attachments

1. Site Plan – Enclosed
2. Geotechnical Report– In File
3. Arborist Report – In File

I. Proposal Description

The applicant is requesting a modification to the 50' top of slope critical area buffer to accommodate a new residence within the buffer. The proposal includes demolition of the existing one-level daylight basement house and replacement with a new two-level daylight basement house.

The new proposed home has smaller footprint than the existing home. The new home will be sited within essentially the same footprint although it will be located at a greater distance from the top of the steep slope critical area, a Critical Areas Land Use Permit is required to adjust the location of the home within the existing footprint. To accommodate the new footprint, the area between the existing house and garage on the upland side of the existing home will be covered by the new proposed footprint and the new home will be expanded where the existing enclosed storage/workshop are was located under the deck.

A new ground-level deck in similar location as previous ground level decks will also be constructed. Additional work includes the conversion of existing ornamental garden areas to usable yard, replacement of rotting wood bulkheads & broken concrete garden walls with natural stone rockeries, removal of the attached/enclosed service yard which is located within west side yard setback. A draft site plan is included as **Attachment 1**.

All substantial trees and native plantings within steep slope areas will be retained. Areas overgrown with invasive ivy will be cleared to improve tree health. The property ingress/egress will be kept in the same location. The new home and landscaping will be built in accordance with the recommendations listed in the project geotechnical report dated May 3, 2013 (**Attachment 2**) and project arborist report dated July 29, 2013 (**Attachment 3**). See conditions of approval in Section XX of this report.

Figure 1 – Site Plan

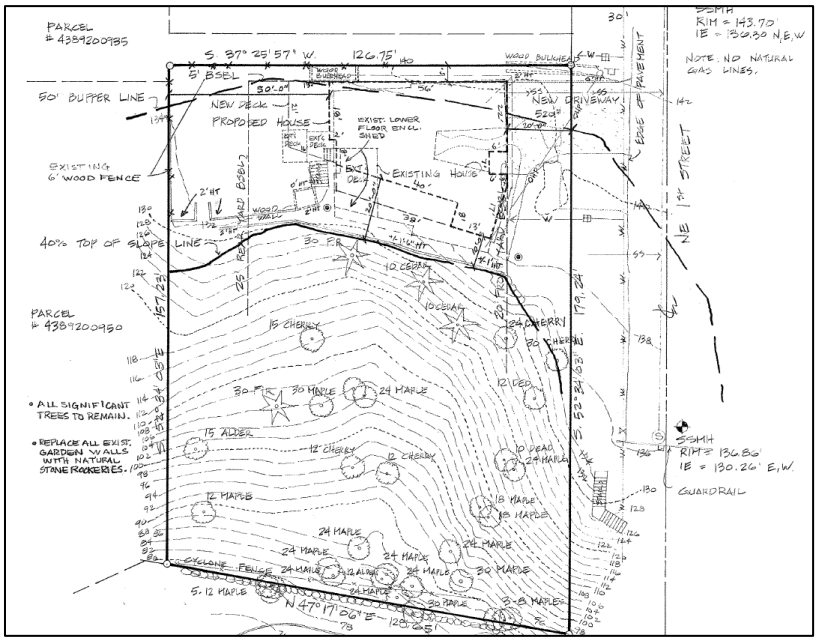

II. Site Description, Zoning, Land Use and Critical Areas

A. Site Description

The subject property is located in a residential neighborhood in West Bellevue, adjacent to Meydenbauer Beach Park. The lot size is 21, 324 square feet with a 40% slope area of 13,446 square feet and a flatter useable area at the top of the slope measuring 7,878 square feet. At the site's street elevation, the lot is relatively flat and contains an existing single-family one-level daylight basement residence (to be demolished and replaced with a new single-family residence). The flat building area of the lot is also the location of a 50' critical area buffer, situated at the top of a 40% steep slope. The steep slope area is heavily wooded with native undergrowth. The site's steep slope areas have no history nor show any indications of instability (see project geotechnical report – **Attachment 2**).

The flat area adjacent to the existing house is lawn and typical Northwest ornamental and native plantings. The steep slope portion of the lot is wooded with mature native evergreen and deciduous trees as well as native undergrowth. There are five mature trees located within the steep slope area near the top of the 40% steep slope line. A Tree Risk Assessment Report was recently completed by a certified arborist (**Attachment 3**), and the trees were considered to be in good health and to not impose a risk to the safety of the occupants of the existing or proposed house. There is a single-family one-story/daylight basement house located on the flat area of the site. The house was built in 1948 and has had several modifications made to it over the years, as follows: The area under the attached deck has been enclosed to create a storage area/workshop; two wood decks have been added in the backyard; several wood bulkheads and steps have been built around the site; an enclosed/attached service yard area has been added in the west side yard setback; and, a 6' tall wood fence has been installed along a portion of the west and southwest property lines.

Because the majority of the flat buildable area is located within the 50' critical area buffer, the applicant is requesting are asking for a modification to the 50' critical area buffer to accommodate a new home with a revised footprint from the existing. The applicant is proposing a reduction in the size of the new footprint and moving the new house farther away from the top of the steep slope than that of the existing house. The proposed house has been sited to create the minimal impact to the critical area by essentially placing the house over the existing house footprint, with the two following major exceptions:

- The proposed house will be 10' away from the top line of the 40% steep slope line (existing house is 5' away); and,
- A substantial section of the proposed house is cantilevered and will therefore be 20' away from the top line of the 40% slope (existing house is less than 5' away in this area).

In addition to these improvements, the applicant is required to follow the structural and geotechnical engineers' recommendations regarding the use of pile foundations, tight- lining of site drainage to street (not allowing drainage onto steep slope), site clearing and erosion control, and excavation. (See project geotechnical report – **Attachment 2**)

An oblique photo of the subject site is included below as Figure 2.

Figure 2

B. Zoning

The property is zoned R-3.5, single-family residential and the proposed new home is consistent with the primary single family use.

C. Land Use Context

The property has a Comprehensive plan Land Use Designation of SF-M (Single Family Medium Density). A single family residence is consistent with this residential land use.

D. Critical Areas On-Site and Regulations

i. Geologic Hazard Areas

Geologic hazards pose a threat to the health and safety of citizens when commercial, residential, or industrial development is inappropriately sited in areas of significant hazard. Some geologic hazards can be reduced or mitigated by engineering, design, or modified construction practices. When technology cannot reduce risks to acceptable levels, building in geologically hazardous areas is best avoided (WAC 365-190).

Steep slopes may serve several other functions and possess other values for the City and its residents. Several of Bellevue's remaining large blocks of forest are located in steep slope areas, providing habitat for a variety of wildlife species and important linkages between habitat areas in the City. These steep slope areas also act as conduits for groundwater, which drains from hillsides to provide a water source for the City's wetlands and stream systems. Vegetated steep slopes also provide a visual amenity in the City, providing a "green" backdrop for urbanized areas enhancing property values and buffering urban development.

III. Consistency with Land Use Code Requirements:

A. Zoning District Dimensional Requirements:

The R-3.5 zoning dimensional requirements found in LUC 20.20.010 apply to the proposed new home. The plans submitted generally demonstrate conformance with zoning dimensional standards, however conformance will be verified during construction permit review. One limitation to be addressed is a limitation in structural lot coverage based on net usable land area. Based on net usable area, approximately 2,757 square feet of structural lot coverage is allowed. See conditions of approval in Section XX of this report.

B. Critical Areas Requirements LUC 20.25H:

The City of Bellevue Land Use Code Critical Areas Overlay District (LUC 20.25H) establishes performance standards and procedures that apply to development on any site which contains in whole or in part any portion designated as critical area, critical area buffer or structure setback from a critical area or buffer. The proposed new home will modify the 50-foot top-of-slope buffer. The project is subject to the performance standards found in LUC 20.25H.125 which are reviewed below.

i. Consistency with LUC 20.25H.125

Development within a landslide hazard or steep slope critical area or the critical area buffers of such hazards shall incorporate the following additional performance standards in design of the development, as applicable. The requirement for long-term slope stability shall exclude designs that require regular and periodic maintenance to maintain their level of function.

1. **Structures and improvements shall minimize alterations to the natural contour of the slope, and foundations shall be tiered where possible to conform to existing topography;**
   The proposed home is not proposed within a steep slope critical area. The proposed home is located in a flat area currently occupied by an existing home and landscaped with a maintained lawn.

2. **Structures and improvements shall be located to preserve the most critical portion of the site and its natural landforms and vegetation;**
   No construction is proposed in the steep slope critical area and the only vegetation impacted is the existing lawn where a small portion of new footprint is proposed to be located.

3. **The proposed development shall not result in greater risk or a need for increased buffers on neighboring properties;**
   The project geotechnical engineer reviewed the proposal and provided recommendations. The project Geotechnical Report, including construction recommendations, is included as **Attachment 2**. The applicant is required to follow the recommendations included in the project geotechnical report, which shall be verified by an inspection made by a qualified geotechnical engineer. See Conditions of Approval in Section X of this report.

4. **The use of retaining walls that allow the maintenance of existing natural slope area is preferred over graded artificial slopes where graded slopes would result in increased disturbance as compared to use of retaining wall;**
   The proposed home is incorporated into the existing topography. Existing walls will be repaired or replaced. No new walls are proposed.

5. **Development shall be designed to minimize impervious surfaces within the critical area and critical area buffer;**
   The new home's roof is considered impervious surface and will require appropriate drainage. The proposed home replaces an existing home and lawn area and does not cause for removal of native vegetation or disturbance of native soils.

6. **Where change in grade outside the building footprint is necessary, the site retention system should be stepped and regrading should be designed to minimize topographic modification. On slopes in excess of 40 percent, grading for yard area may be disallowed where inconsistent with this criteria;**
   The proposed home is designed to minimize topographic modification and is not located in a steep slope critical area.

7. **Building foundation walls shall be utilized as retaining walls rather than rockeries or retaining structures built separately and away from the building wherever feasible. Freestanding retaining devices are only permitted when they cannot be designed as structural elements of the building foundation;**
   Foundations will be built in accordance with geotechnical engineers recommendations.

8. **On slopes in excess of 40 percent, use of pole-type construction which conforms to the existing topography is required where feasible. If pole-type construction is not technically feasible, the structure must be tiered to conform to the existing topography and to minimize topographic modification;**
   This is a proposal to replace an existing home with a new home. No significant site grading is proposed. The new home will be built in accordance with the project geotechnical recommendations.

9. **On slopes in excess of 40 percent, piled deck support structures are required where technically feasible for parking or garages over fill-based construction types; and**
   No parking area or garage of this type is proposed.

10. **Areas of new permanent disturbance and all areas of temporary disturbance shall be mitigated and/or restored pursuant to a mitigation and**

restoration plan meeting the requirements of LUC 20.25H.210.
This is a proposal to locate a new home in an area currently developed and landscaped with an existing residenc. No new disturbance is proposed outside of areas already developed.

IV. Public Notice and Comment

Application Date:	August 15, 2013
Public Notice (500 feet):	August 29, 2013
Minimum Comment Period:	September 12, 2013

The Notice of Application for this project was published the City of Bellevue Weekly Permit Bulletin on August 29, 2013. It was mailed to property owners within 500 feet of the project site. No comments were received.

V. Summary of Technical Reviews

A. Clearing and Grading

The Clearing and Grading Division of the Development Services Department has reviewed the proposed site development for compliance with Clearing and Grading codes and standards. The Clearing and Grading staff found no issues with the proposed development and has approved the application.

VI. Changes to Proposal Due to Staff Review

No changes were requested.

VII. Decision Criteria

A. 20.25H.255.B Critical Areas Report Decision Criteria

The Director may approve, or approve with modifications, a proposal to reduce the regulated critical area buffer on a site where the applicant demonstrates:

1. **The proposal includes plans for restoration of degraded critical area or critical area buffer functions which demonstrate a net gain in overall critical area or critical area buffer functions;**
   This is a proposal to locate a new home in an area currently developed with an existing residence and landscaped with a maintained lawn. No new disturbance is proposed. The applicant has provided supporting documentation in the form of a geotechnical report that demonstrates that with appropriate design the proposed residence will not reduce slope stability and existing trees within the forested slope area will not be impacted or become hazardous as a result of the project. No impact outside of the area of existing development is proposed.

2. **The proposal includes plans for restoration of degraded critical area or critical area buffer functions which demonstrate a net gain in the most important**

critical area or critical area buffer functions to the ecosystem in which they exist;
The most important critical area function for the slopes on this site which are slope stability and erosion control are maintained as identified through construction recommendations made in the project geotechnical report. .

3. **The proposal includes a net gain in stormwater quality function by the critical area buffer or by elements of the development proposal outside of the reduced regulated critical area buffer;**
This is a proposal to locate a new home in an area currently developed with an existing residence and landscaped with a maintained lawn. No new disturbance is proposed. The applicant has provided supporting documentation in the form of a geotechnical report that demonstrates that with appropriate design the proposed residence will not reduce slope stability and existing trees within the forested slope area will not be impacted or become hazardous as a result of the project. No impact outside of the area of existing development is proposed.

4. **Adequate resources to ensure completion of any required restoration, mitigation and monitoring efforts;**
This is a proposal to locate a new home in an area currently developed with an existing residence and landscaped with a maintained lawn. No new disturbance is proposed. The applicant has provided supporting documentation in the form of a geotechnical report that demonstrates that with appropriate design the proposed residence will not reduce slope stability and existing trees within the forested slope area will not be impacted or become hazardous as a result of the project. No impact outside of the area of existing development is proposed..

5. **The modifications and performance standards included in the proposal are not detrimental to the functions and values of critical area and critical area buffers off-site; and**
The modifications and performance measures in this proposal are not detrimental to the functions and values of the steep slope.

6. **The resulting development is compatible with other uses and development in the same land use district.**
The proposed new home is allowed in this zone and is compatible with adjacent land uses. Noise generated by construction is limited to the hours of 7 am to 6 pm Monday through Friday and 9 am to 6 pm on Saturdays, except for Federal holidays and as further defined by the Bellevue City Code. Noise emanating from construction is prohibited on Sundays or legal holidays unless expanded hours of operation are specifically authorized in advance. See Conditions of Approval in Section X of this report.

B. 20.30P.140 Critical Area Land Use Permit Decision Criteria – Decision Criteria
The Director may approve, or approve with modifications an application for a Critical Area Land Use Permit if:

1. **The proposal obtains all other permits required by the Land Use Code.**
   The applicant must obtain required development permits. A construction permit is required. See Conditions of Approval in Section X of this report.

2. **The proposal utilizes to the maximum extent possible the best available construction, design and development techniques which result in the least impact on the critical area and critical area buffer.**
   The new proposed home utilizes the best available construction, design, and development techniques. The project geotechnical engineer reviewed the proposal and provided recommendations. The project Geotechnical Report, including construction recommendations, is included as **Attachment 2**. The applicant is required to follow the recommendations included in the project geotechnical report, which shall be verified by an inspection made by a qualified geotechnical engineer. See Conditions of Approval in Section X of this report.

3. **The proposal incorporates the performance standards of Part 20.25H to the maximum extent applicable.**
   As discussed in Section III of this report, the applicable performance standards of LUC Section 20.25H are being met.

4. **The proposal will be served by adequate public facilities including street, fire protection, and utilities.**
   The proposed activity will not impact public facilities.

5. **The proposal includes a mitigation or restoration plan consistent with the requirements of LUC Section 20.25H.210.**
   This is a proposal to locate a new residence in an area currently developed with an existing residence and landscaped with a maintained lawn. No new disturbance is proposed and no mitigation measures outside of those required by the project geotechnical report are required. The applicant is required to follow the recommendations included in the project geotechnical report, which shall be verified by an inspection made by a qualified geotechnical engineer. See Conditions of Approval in Section X of this report.

6. **The proposal complies with other applicable requirements of this code.**
   As discussed in this report, the proposal complies with all other applicable requirements of the Land Use Code.

VIII. Conclusion and Decision

After conducting the various administrative reviews associated with this proposal, including Land Use Code consistency, City Code and Standard compliance reviews, the Director of the Development Services Department does hereby **approve with conditions** the modification of the 50-foot top-of-slope to accommodate a new residence within the buffer in accordance with the site plan included as **Attachment 1**. The proposal includes demolition of the existing one-level daylight basement house and replacement with a new two-level

daylight basement house. **Approval of this Critical Areas Land Use Permit does not constitute a permit for construction. A building permit, clear and grade permit, and/or utility permit is required and all plans are subject to review for compliance with applicable City of Bellevue codes and standards.**

Note- Expiration of Approval: In accordance with LUC 20.30P.150 a Critical Areas Land Use Permit automatically expires and is void if the applicant fails to file for a building permit or other necessary development permits within one year of the effective date of the approval.

IX. Conditions of Approval

The applicant shall comply with all applicable Bellevue City Codes and Ordinances including but not limited to:

Applicable Ordinances	Contact Person
Clearing and Grading Code- BCC 23.76	Savina Uzunow, 425-452-7860
Land Use Code- BCC Title 20	David Pyle, 425-452-2973
Noise Control- BCC 9.18	David Pyle, 425-452-2973

The following conditions are imposed under the Bellevue City Code or SEPA authority referenced:

1. **Building Permit:** Approval of this Critical Areas Land Use Permit does not constitute an approval of a development permit. A building permit for the new home is required.

   Authority: Land Use Code 20.30P.140
   Reviewer: David Pyle, Development Services Department

2. **Approved Buffer and Structure Setback Modification:** The buffer and structure setback modification approved is for the construction of the new home and landscaping only as described herein and depicted in the project site plan (**Attachment 1**) and does not authorize additional site changes outside of this project scope. This modification does not allow future structures or improvements to be located in the buffer or setback without approval of a Critical Areas Land Use Permit and/or geotechnical evaluation.

   Authority: Land Use Code 20.30P.140
   Reviewer: David Pyle, Development Services Department

3. **Geotechnical Recommendations:** The project shall be constructed per the recommended procedures and practices in the geotechnical report prepared by GEO Group Northwest, Inc. and dated May 3, 2013.

   Authority: Land Use Code 20.30P.140
   Reviewer: David Pyle, Development Services Department

4. **Geotechnical Inspection:** Geotechnical inspection made by the Engineer of Record to verify implementation of the construction recommendations included in the project geotechnical report dated May 3, 2013 shall be performed during construction.

   Authority: Land Use Code 20.30P.140
   Reviewer: David Pyle, Development Services Department

5. **Land Use Inspection:** Following final home construction the applicant shall contact Land Use staff for final inspection.

   Authority: Land Use Code 20.30P.140
   Reviewer: David Pyle, Development Services Department

6. **Noise Control:** Noise related to construction is exempt from the provisions of BCC 9.18 between the hours of 7 am to 6 pm Monday through Friday and 9 am to 6 pm on Saturdays, except for Federal holidays and as further defined by the Bellevue City Code. Noise emanating from construction is prohibited on Sundays or legal holidays unless expanded hours of operation are specifically authorized in advance. Requests for construction hour extension must be done in advance with submittal of a construction noise expanded exempt hours permit.

   Authority: Bellevue City Code 9.18
   Reviewer: David Pyle, Development Services Department

7. **Hold Harmless Agreement:** Prior to building permit or clearing and grading permit approval, the applicant or property owner shall submit a hold harmless agreement releasing the City of Bellevue from any and all liability associated with the construction of the new home. The agreement must meet city requirements and must be reviewed by the City Attorney's Office for formal approval. The agreement shall be recorded with King County Records to the property title.

   Authority: Land Use Code 20.30P.170
   Reviewer: David Pyle, Development Services Department

8. **Tree Protection During Construction.** , To preserve slope functions, during construction protection of trees within the forested slope area shall be implemented in accordance with City of Bellevue Tree Protection Requirements BMP #T101 (http://www.bellevuewa.gov/pdf/Development%20Services/CG_DevStds2010_BMPT101.pdf).

   Authority: Land Use Code 20.30P.140
   Reviewer: David Pyle, Development Services Department

9. **Tree Maintenance.** To protect and manage the forested area downhill of the proposed residence, the applicant shall implement the tree maintenance recommendations of the project arborist report prepared by Greenforest Incorporated and dated July 29, 2013.

Authority: Land Use Code 20.30P.140
Reviewer: David Pyle, Development Services Department

LEGEND

- CONIFER
- DECIDUOUS
- CB TYPE 1
- SEWER MANHOLE
- ROCKERY
- BORE HOLE
- WATER METER
- SIGN
- UTILITY POLE
- SET 1/2" REBAR W/ CAP #38992
- WATER VALVE

SURVEY NOTES

INSTRUMENT: TOPCON GPT 3000W TOTAL STATION
METHOD USED: FIELD TRAVERSE WITH ACTUAL FIELD MEASUREMENTS AND ANGLES WAC 332-130-090
DATE OF SURVEY: APRIL 2013
BASIS OF BEARING: NE 1ST STREET (S52°34'03"E)
REFERENCE SURVEYS: 8703059060
BENCHMARK: CITY OF BELLEVUE CONTROL MON # 3409 AND VERTICAL MON # 868. 2" BRASS DISK AT THE ON TOP OF CURB IN THE SW RETURN OF THE INTERSECTION OF 100th AVE NE AND NE 1st STREET.
ELEVATION = 118.979 (NAVD88)
SITE BENCHMARK: EXISTING SSMH LOCATED AT THE END OF NE 1st STREET.
RIM EL = 136.86' (NAVD88)
EASEMENTS: BASED ON CHICAGO TITLE COMPANY ORDER NUMBER 1359612 THERE ARE NO EASEMENTS AFFECTING SAID PROPERTY.

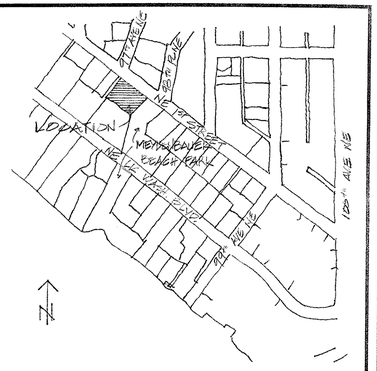

Vicinity Map

NTS

LEGAL DECRIPTION

PARCEL A:
THAT PORTION OF LOT 19, BLOCK 15, LOCHLEVEN, AS RECORDED IN VOLUME 16 OF PLATS, PAGE 46, IN KING COUNTY, WASHINGTON, LYING NORTHEASTERLY OF A LINE DRAWN SOUTHEASTERLY AT RIGHT ANGLES FROM A POINT ON THE NORTHWESTERLY LINE OF SAID LOT 19, WHICH IS MIDWAY BETWEEN THE NORTHEASTERLY LINE OF SAID LOT 19 AND THE NORTHEASTERLY LINE OF M.F. WIGHT ROAD, ALSO KNOWN AS LAKE WASHINGTON BLVD; EXCEPT THE SOUTHWESTERLY 23.57 FEET THEREOF; BEING THE NORTHWESTERLY 126.75 FEET THEREOF AS MEASURED ALONG THE NORTHWESTERLY LINE OF SAID LOT 19.

PARCEL B:
ALSO THAT PORTION OF LOT 18, BLOCK 15, LOCHLEVEN, ACCORDING TO THE PLAT THEREOF, RECORDED IN VOLUME 16 OF PLATS, PAGE 46, IN KING COUNTY, WASHINGTON, DESCRIBED AS FOLLOWS:
BEGINNING AT THE MOST EASTERLY CORNER OF SAID LOT 18,THENCE SOUTHWESTERLY ALONG THE EASTERLY LINE THEREOF 126.75 FEET, THENCE NORTHWESTERLY AT RIGHT ANGLES 5 FEET, THENCE NORTHEASTERLY ALONG A LINE PARALLEL TO THE SAID EASTERLY LINE 126.75 FEET TO THE NORTHEASTERLY LINE OF SAID LOT 18; THENCE SOUTHEASTERLY ALONG THE SAID NORTHEASTERLY LINE 5 FEET TO THE POINT OF BEGINNING.

AREA NOTES

TOTAL LOT: 21,324 SQ.FT. 0.49 ACRES
40% SLOPE: 13,446 SQ.FT.
NON 40% SLOPE: 7878 SQ.FT.

GRAPHIC SCALE

20 0 10 20 40 80

(IN FEET)
1 inch = 20 ft.

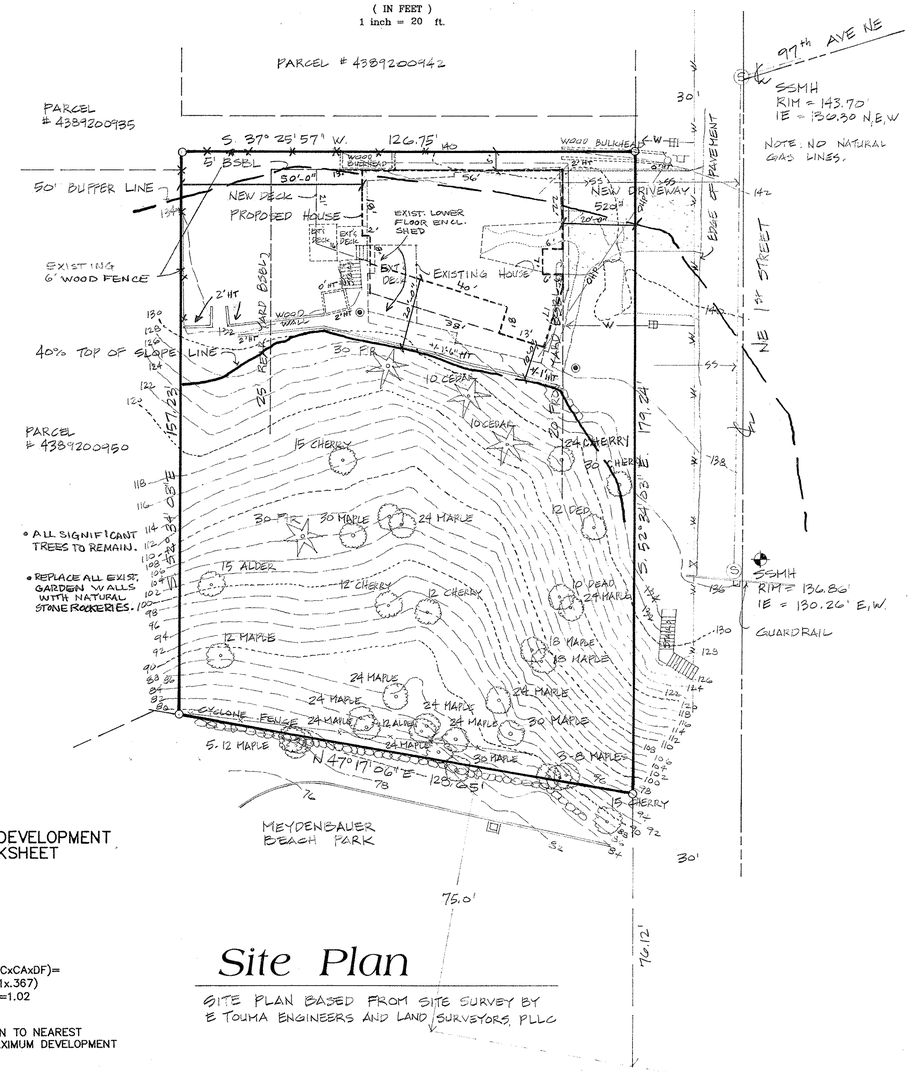

Site Plan

SITE PLAN BASED FROM SITE SURVEY BY E TOUMA ENGINEERS AND LAND SURVEYORS, PLLC

PROJECT DATA

OWNER: EVERGREEN POINT PROPERTIES, L.L.C.
P.O. BOX 85
BELLEVUE, WA 98009-00851
CONTACT PERSON: ERIC WHITING 425-450-1591
PARCEL #: 438920-0946
ZONING R - 3.5
TYPE V-N, R - 3 SINGLE FAMILY
CODE: 2012 IRC/IBC
CREATION DATE: 1948
SET BACKS: FRONT = 20', REAR = 25', SIDES = 5'
MAX HEIGHT: 35' TO RIDGE OF PITCHED ROOF

STRUCTURAL COVERAGE	EXISTING	PROPOSED
HOUSE/GARAGE/PORCHES	1862	2720
SECOND FLOOR DECK	280	0
TOTAL BUILDING AREA (SITE COVERAGE BY STRUCTURE.)	2142	2720 SQ. FT.
DRIVEWAY/WALKS/PATIO	703	520
TOTAL IMPERVIOUS	2845	3240 SQ. FT.

SITE AREA: 21321 SQ. FT. x .35 =
7462.35 SQ. FT. ALLOWABLE SITE COVERAGE BY STRUCTURES.

21321 SQ. FT. x .50 =
10660.5 SQ. FT. ALLOWABLE SITE COVERAGE OF IMPERVIOUS.

2720 < 7462 SITE COVERAGE BY STRUCTURES UNDER 35%
3240 < 10660 SITE COVERAGE OF IMPERVIOUS UNDER 50%

RESIDENTIAL DEVELOPMENT DENSITY WORKSHEET

SITE FACTORS
DU/AC=3.5 ACRES
CA=0.31 ACRES
BA=0.18 ACRES
DF=0.367

EQUATION
(DU/ACxBA)+(DU/ACxCAxDF)=
(3.5x0.18)+(3.5x0.31x.367)
(0.63) + (0.3982)=1.02

RESULT
1.04 ROUNDED DOWN TO NEAREST WHOLE NUMBER=MAXIMUM DEVELOPMENT DENSITY OF 1

REVISIONS	BY

© 2013 copyright protected by
karen crenshaw
residential building designer
630 19th ave west kirkland, WA. 98033
425-889-1429

Site Plan

EVERGREEN PT. PROPERTIES, LLC
NEW RESIDENCE AT 9705 NE 1ST STREET
BELLEVUE, WASHINGTON 98004

Date 8-2-13
Scale 20' = 1'-0"
Drawn
Job
Sheet 1
Of Sheets

24 X 36 PRINTED ON NO. 1000H CLEARPRINT®

GEOTECHNICAL ENGINEERING STUDY
PROPOSED RESIDENCE
9705 NE 1ST STREET
BELLEVUE, WASHINGTON

G-3440

Prepared for

Mr. Eric Whiting
Overbrook Construction
P.O. Box 85
Bellevue, Washington 98009-0085

May 3, 2013

GEO Group Northwest, Inc.
13240 NE 20th Street, Suite 10
Bellevue, Washington 98005
Phone: (425) 649-8757 / Fax: (425) 649-8758

GEO Group Northwest, Inc.
Geotechnical Engineers, Geologists
& Environmental Scientists

May 3, 2013 G-3440

Mr. Eric Whiting
Overbrook Construction
P.O. Box 85
Bellevue, Washington 98009-0085

Subject: Geotechnical Engineering Study, Proposed Residence, 9705 NE 1st Street, Bellevue, Washington

Dear Mr. Whiting:

GEO Group Northwest, Inc., is pleased to issue its geotechnical engineering study report for the property at the above-referenced location in Bellevue, Washington. The purpose of this report is to provide geotechnical engineering recommendations regarding the proposed construction of a new single-family residence at the subject site to replace the existing residence. We understand that the new residence will have a footprint approximately similar to the existing one, with regard to its eastern extent, and will consist of two stories with a daylight basement. We anticipate that the basement floor elevation will be similar to or slightly lower than that of the existing residence.

SITE DESCRIPTION

The project site is located in a residential neighborhood in Bellevue, Washington, as illustrated in Plate 1 – Site Location Map. The project site is nearly rectangular in shape and is approximately 0.5 acres in size. An existing single-family residence is located on the western part of the site. The residence was constructed in 1948 and has a single story plus a finished daylight basement. A ravine occupies the eastern portion of the site and extends onto the adjacent property (Meydenbauer Beach Park).

The north side of the site is bordered by NE First Street, and the west and south sides of the site are bordered by other developed single-family residential lots. The principal site features are illustrated in Plate 2 – Site Plan.

13240 NE 20th Street, Suite 10 • Bellevue, Washington 98005
Phone 425/649-8757 • Fax 425/649-8758

GEOLOGIC OVERVIEW

According to published geologic mapping for the area[1], surficial soils at the site consist of Quaternary-age glacial till from the Vashon Stade of the Fraser Glaciation. These deposits consist of unsorted mixtures of silt, sand, and gravel, with lesser cobbles. They were directly overridden by the Puget Lobe glacier and, as a result, typically are very dense and only slightly permeable when undisturbed and unweathered.

SITE RECONNAISSANCE

On April 23, 2013, a geologist from our firm visited the site to perform a reconnaissance of the visible geologic conditions at the site. We observed that upper, relatively flat portion of the site was occupied by a residence with a daylight basement and front and rear yards. The east side of the residence nearly abuts the top of the steep slope which occupies the remainder of the property.

The steep slope showed no indications of instability, such as hummocky topography, leaning trees, or apparent slide scarps. No significant water seepage was noted on the slope.

We observed no cracks in the visible exterior of the concrete foundation of the residence during our site visit. The cement block addition on the southeast corner of the residence also showed no exterior signs of settlement. The homeowners stated that they have occupied the house for 40 years and have noted no issues involving settlement of the house.

SUBSURFACE INVESTIGATION

Exploration Activities

On April 23, 2013, a geologist from our firm supervised the drilling of two exploratory soil borings on the site. The borings were drilled using a manually-portable drilling rig equipped with hollow-stem augers. One boring, B-1, was located near the southeast corner of the existing residence and was completed to a depth of approximately 10 feet below the ground surface (bgs). The second boring, B-2, was located near the northeast corner of the existing residence and was

[1] Waldron, H.H., et al., Preliminary Geologic Map of Seattle and Vicinity, Washington. U.S. Geological Survey Miscellaneous Geologic Investigations Map I-354, 1962.

completed to a depth of approximately 28 feet bgs. The boring locations are illustrated in Plate 2 – Site Plan.

We observed the drilling operations and logged the conditions encountered in the borings. Soil samples were collected at regular depth intervals for examination and for moisture content testing at our office. Standard penetration tests also were performed at regular depth intervals in both borings to evaluate the density of the in-situ soils. Boring logs and a soil classification explanation are provided in Attachment 1 to this report.

Exploration Findings

The soils encountered in boring B-1 consisted of an upper layer of loose, moist, silty sand with minor gravel over a lower layer of very dense, damp, silty sand with minor gravel. The upper soils were brown and un-stratified and had a thickness of 7.5 feet. The lower soils were brown-gray in color and were somewhat cemented.

The soils encountered in boring B-2 consisted of loose to medium dense, moist, silty sand usually with minor gravel. These soils commonly were mottled and oxidized and were un-stratified. A zone of very soft soils which included some organics was encountered between approximately 23 and 27 feet bgs in the boring. At a depth of approximately 27 feet bgs, very dense, damp, gray silty sand with minor gravel was encountered.

Groundwater was not encountered in the borings, but a narrow zone of relatively increased moisture was noted at the bottom of the loose to medium dense soils in both borings.

EVALUATION OF SITE EXPLORATION RESULTS

The loose to medium dense soils found on the borings appear to be fills based on their low density, presence of mottling, and un-stratified texture. The underlying very dense soils found in both borings are interpreted to be native glacial till, consistent with the published geologic mapping for the area.

The fills encountered in boring B-1 probably are associated with past grading for the rear yard, timber walls and planters, and storage shed. The much deeper fills encountered in boring B-2 appear to be associated with past grading to construct an embankment for the street to the north. The bottom portion of the loose soils in boring B-2 may constitute a buried topsoil zone based on the presence of some organics and their very loose condition.

A review of a 1936 aerial photograph of the site vicinity shows the adjacent street had a bridge crossing over the ravine. That bridge is no longer present, but the limit of the apparent embankment for the bridge approach can be discerned on the topographic survey by a notable change in slope grade across the area. The fill embankment has an inclination of approximately 80 percent grade and has a relatively smooth surface; whereas the other slope areas have inclinations of approximately 50 percent grade and have relatively less smooth surfaces.

SITE SEISMIC DESIGN CLASSIFICATION

Per Section 1613.5 of the International Building Code, 2009 Edition, the project site can be assigned Site Class C (Very Dense Soil Profile). Use of this class for seismic design for the proposed residence is contingent on the foundations being supported on the very dense glacial till soils. Otherwise, we recommend that Site Class D (Stiff Soil Profile) be used for seismic design purposes.

GEOLOGIC CRITICAL AREAS EVALUATION

We have reviewed the letter from the City of Bellevue addressed to you dated March 5, 2013, regarding the proposed redevelopment of the site property. According to that letter, the City has identified the ravine slope on the eastern part of the site as a likely steep slope critical area based on observations of the apparent height and inclination of the slope.

We reviewed the recently completed topographic survey for the site, as provided by you. The survey shows that the steep slope on the site has inclinations ranging between approximately 50 and 80 percent grade. The steep slope has a height ranging around 50 feet, a few feet higher in some areas and a few feet lower in others. The survey data confirm that the steep slope on the site meets the City's criteria for steep slope hazard areas.

Landslide and Coal Mine Hazard Area Evaluation

Based on the findings from our site investigation for this geotechnical study, the site does not appear to meet the criteria for landslide hazard areas per the City of Bellevue Land Use Code. The site exhibits no evidence of previous slope failure, or of seeps or shallow groundwater at or near the slopes, and is not subject to bank incision.

A potential concern, however, may exist regarding the profile of the buried ground surface below the fills that were found in boring B-2. If the ground below the fills was not graded into benches before the fills were placed, there is a possibility that the sloping previous ground surface could be a surface of weakness in this area.

In our opinion, no areas of the site meet the criteria for coal mine hazard areas per the City of Bellevue Land Use Code.

SLOPE STABILITY EVALUATION

To evaluate the stability of the steep slope at the site, we considered multiple aspects pertaining to the site conditions and history.

- Native soils underlying the site consist of very dense glacial till. These soils typically are very stable.

- No water seepage was encountered in the borings, and no seepage was observed on the steep slope.

- There are no visual indications of mass soil movement on the slope, including the area on the northeast part of the site where deep fills were found during our investigation.

- Thick loose to medium dense fills were found in boring B-2. These fills appear to comprise an embankment for the adjacent street and former bridge that crossed the ravine. The configuration of the surface on which the fills were placed is unknown, but possibly might be sub-parallel to the slope face and possibly be a surface of weakness.

Based on these findings and observations, it is our opinion that the portions of the steep slope on the site that are comprised of glacial till soils are stable and have a low potential for movement. The portion of the slope which appears to have been formed with embankment fill appears to be stable in its present condition, but may have a potential for future movement because of its relatively steep face, loose condition, and unknown configuration of the horizon between the fills and underlying soils.

Potential hazard to the proposed development associated with the potential future movement of the fills can be mitigated by supporting structures located over fills on augered pile foundations, as recommended elsewhere in this report. Also, these same measures will mitigate the potential

for the proposed development to result in future movement of the fills. Therefore, in our opinion, the proposed development will not increase the risk of soil instability at the site or on adjacent properties, provided that it is designed and constructed in accordance with the recommendations in this report.

GEOTECHNICAL EVALUATION OF STEEP SLOPE BUFFER REDUCTION

The City of Bellevue Land Use Code establishes a standard buffer width of 50 feet from the top of steep slope critical areas. However, there are allowances for a new residence to occupy steep slope and buffer areas that are occupied by a legal existing residence. It is also possible for the buffer width to be reduced dependent upon the findings and conclusions of a geotechnical engineering study of the property and an evaluation of the impact of the proposed development on the stability of the site including the steep slope area. There is no established building setback in addition to the buffer for the tops of steep slope critical areas.

From a geotechnical perspective, it is our opinion that the width of the steep slope critical buffer at the site can be reduced to zero feet, provided that the proposed residence is supported on the dense, native, glacial till soils either by using conventional footings or pile foundations, as recommended in this report.

This opinion also is contingent upon designing the new residence in a manner where drainage is not discharged onto the steep slope or in proximity to the top of the steep slope. Tightlining the drainage lines to the bottom of the steep slope is an acceptable option, from a geotechnical perspective, if facilities are available to receive the discharge.

CONCLUSIONS AND RECOMMENDATIONS

Based on the results of our study, it is our professional opinion that it is geotechnically feasible to construct a new residence at the site. Based on the findings of our study and our understanding of the preliminary location of the proposed residence, we conclude that the principal geotechnical issues regarding the proposed redevelopment consist of building support, retaining and basement walls, slab-on-grade floors, and drainage. Our recommendations regarding these and other geotechnical aspects are presented in the following sections of this report.

Building Foundations

Acceptable bearing soils for foundations were encountered at approximately 7.5 feet bgs at boring B-1 and at approximately 27 feet bgs at Boring B-2. Based on these findings, we recommend the proposed residence be supported on augered concrete piles embedded into dense native soils. The piles should be structurally connected to a reinforced grade beam system designed by a structural engineer.

It is possible that dense, native soils may be present at proposed building floor elevations at locations in the western part of the site. If so, it may be possible to conventional spread footing foundations to support the residence in these areas. For this reason, we have also included recommendations for conventional footing foundations in the event that they are able to be utilized.

Augered Concrete Piles

Augered concrete piles can be used to support the proposed residence. The piles may consist of either open-hole augered piles or auger-cast piles. If open-hole augered piles are selected, we recommend that the contractor have temporary casing available on site during the installation in the event of potential caving of the boreholes.

We recommend that the piles have a minimum diameter of 12 inches and be embedded at least 5 feet into the very dense native soils. Our recommended allowable axial bearing capacities for the piles are tabulated below.

AUGERED CONCRETE PILE AXIAL CAPACITIES*

Pile Diameter (inches)	Minimum Pile Length (feet)	Pile Embedment (feet)	Allowable Bearing (tons)	Allowable Uplift (tons)
12	18	5	20	7
14	18	5	27	9
16	18	5	35	12
18	18	5	45	15

* For Safety Factor of 3.0

With regard to lateral load capacities, we recommend that the augered piles be assigned allowable capacities of 3 tons per pile for 16-inch or 18-inch diameter piles.

A one-third increase in the above allowable pile capacities (axial and lateral) can be used when considering short-term seismic loads. A coefficient of friction of 0.30 may be used between the soil and the piles above the embedment zone. A coefficient of friction of 0.35 can be used for soil in the embedment zone. No reduction in the above pile capacities is required if the pile spacing is at least three times the pile diameter.

The performance of the concrete piles depends on how and to what bearing stratum the piles are installed. It is critical that judgment and experience be used as a basis for determining the embedment length and acceptability of a pile. Therefore, we recommend that GEO Group Northwest be retained to monitor the pile installation operation, collect and interpret installation data, and verify that the piles are installed consistent with the project plans. We also suggest that the contractor's equipment and installation procedure be reviewed by GEO Group Northwest before the start of the installation work to help mitigate problems which could delay the progress of the work.

Conventional Shallow Footing Foundations

Our recommended design criteria for conventional strip and column footing foundations are as follows:

- Allowable bearing pressure, including all dead and live loads:
  - Dense to very dense, undisturbed glacial till soil = 3,000 psf
  - Compacted earthen structural fill = 2,000 psf

- Minimum depth to base of perimeter footing below final exterior grade = 18 inches

- Minimum depth to bottom of interior footings below top of floor slab = 12 inches

- Minimum width of wall footings = 16 inches

- Minimum lateral dimension of column footings = 24 inches

- Estimated post-construction settlement = 1/4 inch

- Estimated post-construction differential settlement across building width = 1/4 inch

A one-third increase in the above allowable bearing pressures can be used when considering short-term transitory wind or seismic loads.

Lateral loads can be resisted by friction between the footings and the supporting compacted fill subgrade or by passive earth pressure acting on the buried portions of the footings. For the latter case, the footings should be poured "neat" against the existing undisturbed soil or be backfilled with compacted structural fill to the top of the footing. Our recommended design parameters are as follows:

- Passive Pressure (Lateral Resistance)
  - 350 pcf equivalent fluid weight for dense native soil or compacted structural fill

- Coefficient of Friction (Friction Factor)
  - 0.35 for dense native soil or compacted structural fill

If adequate bearing soils are not present at planned footing foundation elevations, the unsuitable soils should be over-excavated until adequate bearing soils are encountered, or concrete piles should be used for support per the recommendations in this report. If the soils are over-excavated to the deeper bearing soils, the footings should be extended down to the acceptable subgrade, or the over-excavated area should be backfilled in conformance with the structural fill recommendations in this report. Footing over-excavations should extend outward from the footing edges to a distance at least equal to the depth of the over-excavation if they are backfilled using structural fill that consists of most earthen materials (granular soil, sand, unwashed gravel, etc.). This is to properly transfer the building loads through the fill and to the bearing stratum.

As an alternative to use of the typical structural fill materials noted above, the size of the over-excavation can be limited to a minimum of the footing size if the backfill material consists of either 1) clean crushed rock placed in lifts of 12 to 18 inches and compacted into the trench bottom and sidewalls using a hoe-pack; or 2) cementitious controlled-density fill (CDF) or lean-mix concrete that has sufficient strength to meet the design bearing pressure for the footings. The latter option is particularly useful in situations where the footing bearing pressure per the design exceeds the allowable bearing capacity for earthen or aggregate structural fill.

We recommend that excavation and grading work for preparing the footing subgrades for the building be monitored by the geotechnical engineer, to verify that suitable bearing soils are

reached and that placement and compaction of structural fill are performed consistent with our recommendations. We also recommend that footing drains be installed along the perimeter strip footings. Details regarding footing drains are provided below in the Subsurface Drainage section of this report.

Slab-on-Grade Floors

Slab-on-grade floors which are supported by the underlying soils should be constructed on a firm, unyielding native soil subgrade or structural fill subgrade. Areas of the subgrade that are loose or soft, or have been disturbed by construction activity should be either compacted to a competent condition or removed and replaced with compacted structural fill.

We recommend that slab-on-grade floors be reinforced with a gridwork of #4 rebar with 12-inch on-center spacing that is doweled into the footings or grade beams. The slabs should have a thickness of at least 5 inches.

If there will be excavation to reach the bottom floor slab elevations for the new residence, then it is our opinion that the floor slabs likely will not require structural support, provided our recommendations for subgrade preparation and reinforcement are followed. If, however, there will be a net placement of fill to reach the bottom floor slab elevations, there is a potential for post-construction settlement of the slabs unless they are structurally supported. The structural support can consist of 1) an array of small-diameter pipe piles arranged with a spacing of 6 feet on-centers driven to refusal and connected to the floor slabs, or 2) connection to a system of structural grade beams. Two-inch diameter, Schedule 80, steel pipe piles driven to a refusal criteria of no more than one inch of penetration per minute of continuous driving with a 90-pound jackhammer can be assigned an allowable bearing capacity of 3 tons.

To avoid moisture build-up on the subgrade, the floor slab should be placed on a capillary break, which is in turn placed on the prepared subgrade. The capillary break should consist of a layer, at least 6 inches thick, of free-draining crushed rock or gravel containing no more than five percent material finer than a No. 4 sieve. A vapor barrier should be placed over the capillary break to reduce upward transmission of water vapor through the slab, if such transmission is undesirable.

Surface Drainage

Final site grades should direct surface water away from the building. During construction, water should not be allowed to stand in areas where footings, slabs, or pavements are to be constructed. We recommend that soft ground surfaces be sealed at the end of the day by compacting them, to reduce the potential for moisture infiltration into the soils.

Subsurface Drainage

We recommend that footing drains be installed for exterior footing foundations, if constructed. The drains should consist of 4"-diameter or larger, perforated, rigid PVC pipe laid next to the bottom of the footing and sufficiently sloped to generate flow toward a discharge location. The drain line should be surrounded with washed rock or other free-draining granular material. The drain rock and pipe together should be wrapped with a layer of geotextile filter fabric, such as Mirafi 140NL or similar, to prevent migration of soils into the drainage system. A schematic illustration of the footing drain features is provided in Plate 3 – Typical Footing Drain.

The footing drain lines should be tightlined to an appropriate stormwater discharge location. Roof downspout drain lines or other surface drainage lines should not be connected to the footing drainage system. The roof downspout drain lines should be tight-lined to a separate, appropriate discharge location. We recommend that sufficient cleanouts be installed at strategic locations to allow for periodic maintenance of the footing drains and the roof downspout lines.

Conventional Concrete Basement and Retaining Walls

The following recommendations regarding conventional concrete basement and retaining walls are provided below for your use if conventional concrete basement or retaining walls up to approximately 10 feet in height are planned. If higher walls are planned, please contact us to review and possibly modify the following recommendations.

Conventional concrete basement and retaining walls should be supported on dense, native soils or on structural fill that is placed directly on dense, native soils. The recommendations for foundation footings presented above are also applicable for wall footings.

Conventional concrete retaining walls which are free to rotate on top (unrestrained) should be designed for an active soil pressure. Permanent retaining walls that are restrained horizontally at

the top (such as basement walls) are considered unyielding and should be designed for a lateral soil pressure under the at-rest condition. Soil parameters for the wall design are as follows:

Active Earth Pressure
35 pcf, equivalent fluid pressure, for level ground behind the walls

At-Rest Earth Pressure
45 pcf, equivalent fluid pressure, for level ground behind the walls

Passive Earth Pressure
350 pcf, equivalent fluid pressure, for undisturbed, native dense soil or structural fill

Base Friction
0.35 for undisturbed, native dense soil or structural fill

Surcharge loads imposed on walls due to nearby structures, traffic (including construction vehicles or equipment), upward sloping ground, or other conditions behind the walls should be added to the active and at-rest earth pressures stated above. Also, downward sloping ground in front of walls should be evaluated with regard to potentially reducing the value of the allowable passive earth pressure stated above. At this time, no conditions such as those described above have identified to us; however, we should be consulted to provide additional recommendations if you propose to have upward-sloping ground behind the walls or other surcharge pressures on the walls.

To prevent the buildup of hydrostatic pressure behind permanent basement or conventional retaining walls, we recommend that a vertical drain mat, such as Miradrain 6000 or similar product, be used to facilitate drainage behind the wall. The drain mat should extend from near the finished surface grade, downward to the footing drain system. Alternatively, in place of vertical drain mat, a prism of clean, granular, free-draining backfill material at least 12 inches wide can be placed against the wall. This backfill should extend downward to the footing drain.

The top 12 inches of the fill behind the wall should consist of compacted and relatively impermeable soil. This cap material can be separated from the underlying more granular drainage material by a geotextile fabric, if desired. Alternatively, the surface can be sealed with asphalt or concrete paving. The final grade should be sloped to drain away from the building wall. A schematic illustration of the wall and drainage system is presented in Plate 4 – Retaining Wall Backfill and Drainage.

The backfill in areas adjacent to concrete retaining walls should be compacted with hand held equipment (such as a jumping jack) or a hoe-pack. We recommend that walls which are to be restrained (such as basement walls) be restrained before backfilling is performed. Heavy compacting machines (such as a vibratory roller) should not be used in proximity to retaining walls unless the walls have been designed and built to resist the surcharge load effects that are generated.

Earthwork

Site Clearing and Erosion Control

The proposed building and pavement areas should be stripped and cleared of debris, topsoil, organics, and any other deleterious materials, if present. These materials should be hauled off site or used for landscaping, where appropriate; they should not be used as structural fill or retaining wall backfill.

Temporary erosion and sedimentation controls (TESCs) should be installed or implemented before or at the start of site clearing activities. TESCs for the project can include using silt fences, check dams, straw mulch, hay bales, and a stabilized construction entrance. The silt fences or other barrier controls should be placed along the cross-slope and down-slope boundaries of the disturbed areas to prevent sediment-laden runoff from being discharged off site. Exposed soils, including stockpiled soils, should be covered with plastic sheeting when they are not being worked.

Excavations and Slopes

Temporary excavation slopes should not be greater than the limits specified in local, state and federal government safety regulations. Temporary cuts which are greater than four feet in height typically can be sloped at inclinations up to 1H:1V (Horizontal: Vertical). In situations where dense, native glacial till soils are observed to be present and no water seepage is observed, temporary cuts in the these soils can be made at inclinations up to 0.5H:1V if approved by the geotechnical engineer. If adequate space is not available to maintain open cuts per the recommendations in this report, engineered support may be required to provide lateral support to such excavations. Permanent unreinforced slopes at the site should be inclined no steeper than 2H:1V.

Surface runoff should not be allowed to flow over the top of slopes into excavations. During wet weather, exposed slopes should be covered with plastic sheeting to prevent erosion and softening. We recommend that a GEO Group Northwest representative be on site during excavation of cut slopes to verify anticipated geologic conditions and to evaluate slope stability, particularly if groundwater seepage or loose soils or debris are encountered.

Subgrade Preparation

After the completion of site clearing and excavation, soils in areas to receive structural fill, concrete slabs, sidewalks, or pavements, should be prepared to a firm, unyielding condition. The prepared subgrades should be observed and approved by the geotechnical engineer. Any detected soft spots or disturbed areas should be compacted or excavated and replaced with compacted structural fill or crushed rock as directed by the geotechnical engineer. Preparation of foundation subgrades should conform to our recommendations presented above in the Building Foundations section of this report.

Structural Fill

Structural fill is typically defined as earthen material that is placed below buildings (including foundations and on-grade slab floors), sidewalks, pavements, or other structures, and provides support to those structures. Soils that meet the material specifications for structural fill as presented below in this report, or are otherwise approved by the geotechnical engineer, can be used for structural fill. Material which is stored on site for later use as structural fill should be covered with plastic sheeting to protect it from moisture if its usability is sensitive to its moisture content. Structural fill material should be placed and compacted in accordance with the recommendations provided below or as otherwise approved by the geotechnical engineer during construction.

Fill Material Specifications

All materials to be used as structural fill should not contain rocks or lumps larger than 3 inches in its greatest dimension. During wet weather, the material should be granular in character, with a fines content (passing a #200 sieve) of less than 5 percent. All material should be placed at or near its optimum moisture content. If the material is too wet to be compacted to the required degree, it will be necessary to dry the material by aeration (which may be difficult) or replace the material with an alternative suitable material, in order to be capable of achieving the required compaction.

Unweathered, glacial till soils at the site might be usable as structural fill during dry weather, provided that the moisture content in these soils is near the optimum amount for compaction purposes. The loose to medium dense silty sand soils found in the borings from our site investigation, however, are unlikely to be suitable for use as structural fill due to their higher than optimum moisture content. For this reason, it may be necessary to import structural fill material to the site for use.

Compaction Specifications

All structural fill material should be compacted to at least 95 percent of its maximum dry density as determined by ASTM D1557 (Modified Proctor Test), unless otherwise authorized by the geotechnical engineer, and with the following exceptions. Structural fill material under pavements should be compacted to at least 90 percent of its maximum dry density, except for the top 12 inches of the material, which should be compacted to at least 95 percent of its maximum dry density as determined by ASTM D1557.

Structural fill material should be spread and compacted in lifts that are 10 inches or less in thickness in an un-compacted state. The compacted fill material should be field tested by using ASTM Designations D2922 and D3017, Nuclear Probe Method, to verify that the required degree of compaction has been achieved.

LIMITATIONS

This geotechnical report has been prepared for the specific application to this site for the exclusive use of Overbrook Construction, and its authorized representatives or agents. Any other use of this report is solely at the user's own risk. We recommend that this report be included in its entirety in the project contract documents for reference during construction.

Our findings and recommendations stated herein are based on field observations, our experience with similar projects, and our professional judgment. The recommendations presented in this letter are our professional opinion derived in a manner consistent with the level of care and skill ordinarily exercised by other members of the profession currently practicing under similar conditions in this area and within the project schedule and budget constraints. No warranty is expressed or implied. In the event that soil conditions are found to differ from those discussed in this report, GEO Group Northwest should be notified and the relevant recommendations in this report should be re-evaluated.

CLOSING

We appreciate this opportunity to provide you with geotechnical engineering services. Please feel free to call us if you have any questions.

Sincerely,

GEO Group Northwest, Inc.

Keith Johnson
Project Geologist

William Chang, PE
Principal Engineer

Attachments:

- Plate 1 – Site Location Map
- Plate 2 – Site Plan
- Plate 3 – Typical Footing Drain
- Plate 4 – Retaining Wall Backfill and Drainage
- Appendix A – Boring Logs and Soil Classification Legend

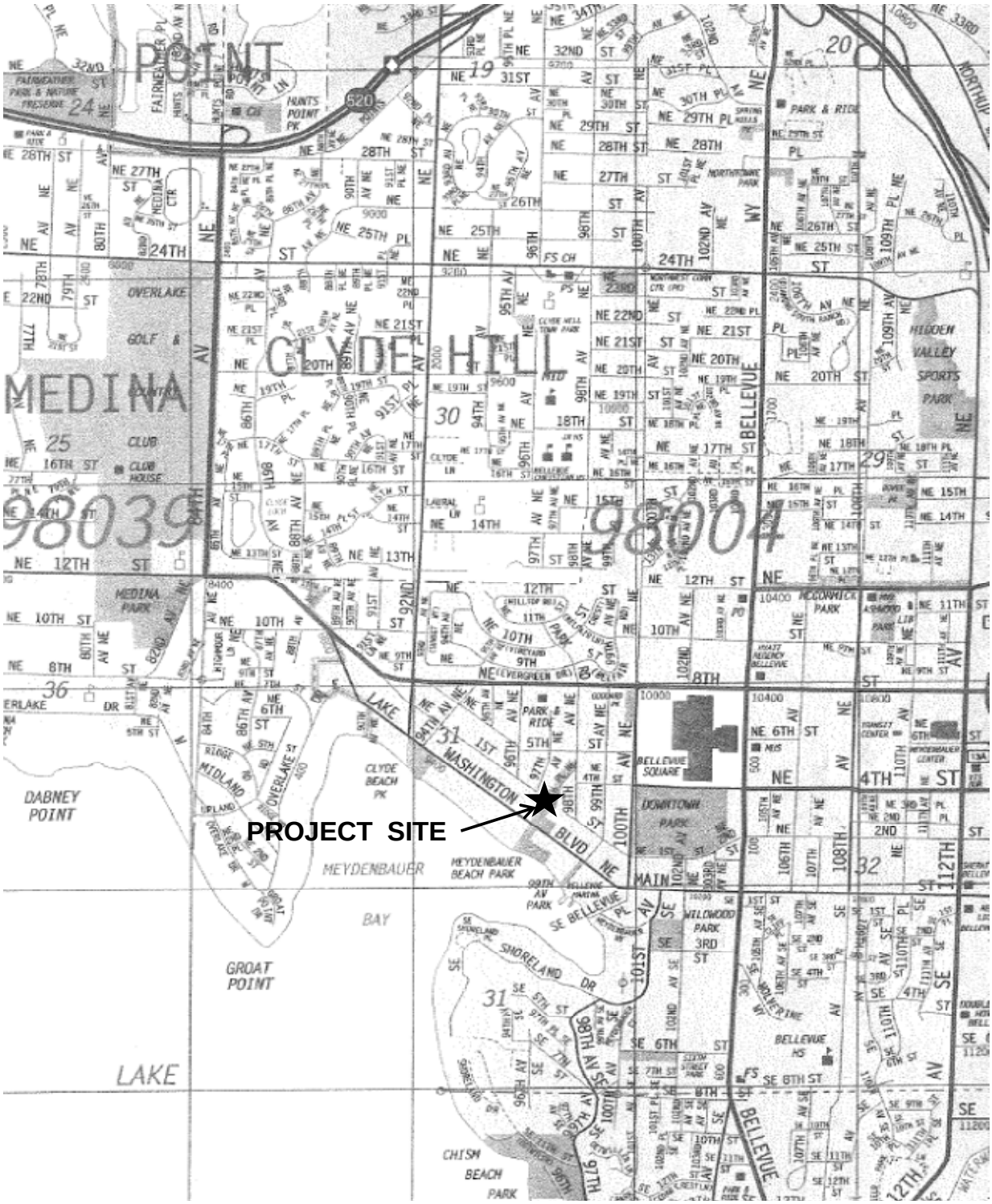

GEO Group Northwest, Inc.

Geotechnical Engineers, Geologists, & Environmental Scientists

SITE LOCATION MAP

PROPOSED RESIDENCE
9705 NE 1ST STREET
BELLEVUE, WASHINGTON

SCALE:	1" = 2000'	DATE:	4/26/2013	MADE:	KJ	CHKD:	WC	JOB NO:	G-3440	PLATE	1

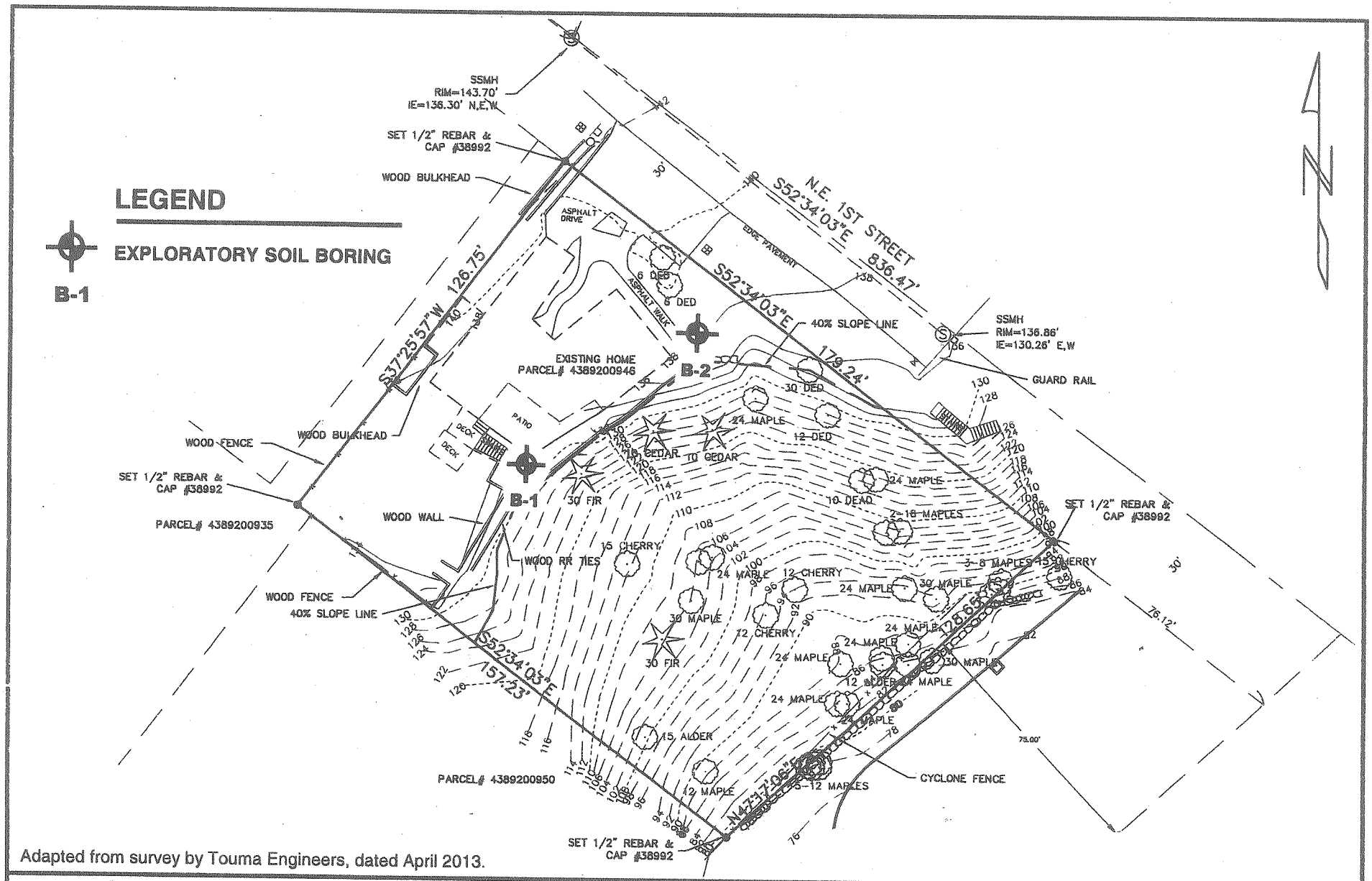

Adapted from survey by Touma Engineers, dated April 2013.

GEO Group Northwest, Inc.

Geotechnical Engineers, Geologists, & Environmental Scientists

SITE PLAN

PROPOSED RESIDENCE
9705 NE 1ST STREET
BELLEVUE, WASHINGTON

SCALE:	1" = 40'	DRAWN:	KJ	CHECKED:	WC	DATE:	4/26/2013	PROJECT NO.:	G-3440	PLATE	2

TYPICAL FOOTING DRAIN

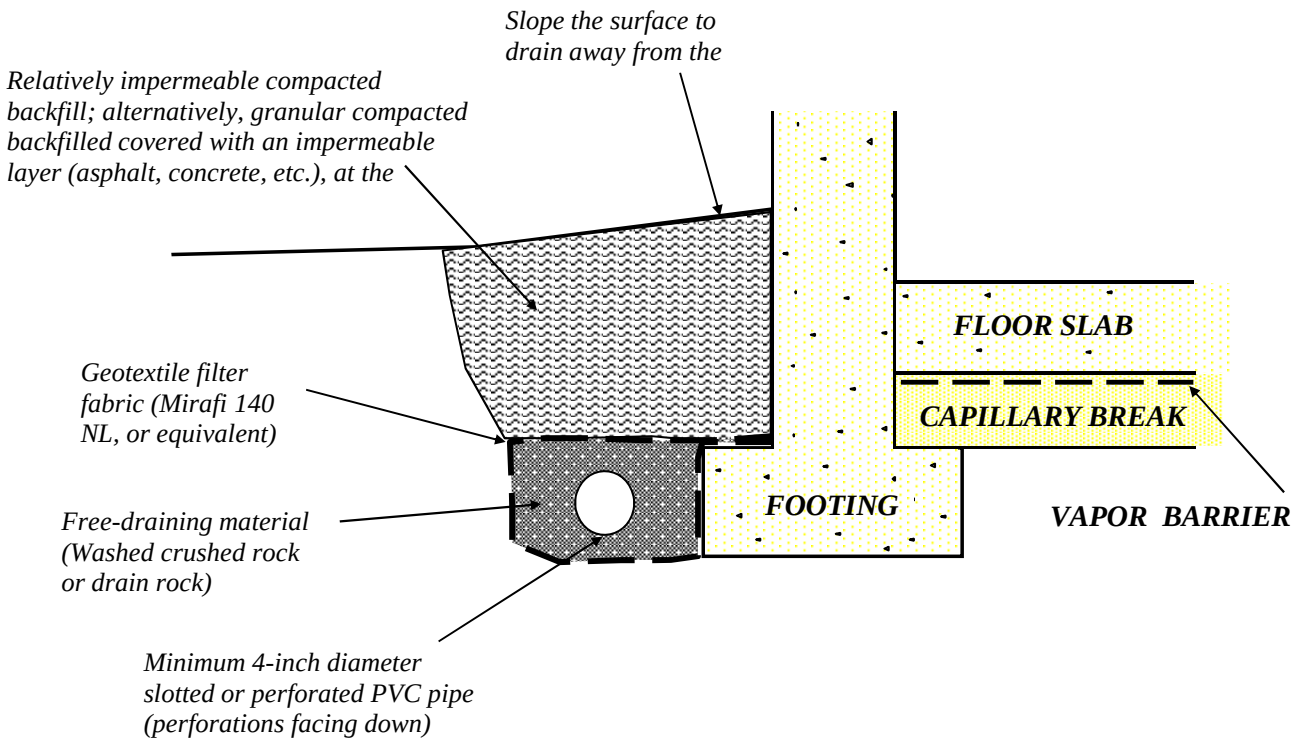

NOT TO SCALE

NOTES:

1.) Perforated or slotted rigid PVC pipe should be tight jointed and laid with perforations or slots down, and with positive gradient toward discharge location(s). The pipe should be placed at or slightly above the elevation of the bottom of the footing. Do not replace rigid PVC pipe with flexible corrugated plastic pipe.

2.) Do not connect roof downspout drains to the footing drain lines. Drain line cleanouts should be installed at appropriate locations to allow inspection and maintenance of the lines after construction.

3.) If the backfill will support sidewalks, driveways, patios, or other structures, it should be compacted to at least 90% of its maximum dry density based on the Modified Proctor test method, except that the top 12 inches of the backfill should be compacted to at least 95% of the maximum dry density.

4.) The geotextile filter fabric should be placed around the drain rock as shown, and not wrapped directly around the pipe.

GEO Group Northwest, Inc.
Geotechnical Engineers, Geologists, & Environmental Scientists

TYPICAL FOOTING DRAIN
PROPOSED RESIDENCE
9705 NE 1ST STREET
BELLEVUE, WASHINGTON

SCALE: NONE	**DATE:** 5/3/2013	**MADE:** KJ	**CHKD:** WC	**JOB NO.** G-3440	**PLATE** 3

TYPICAL FOOTING DRAIN

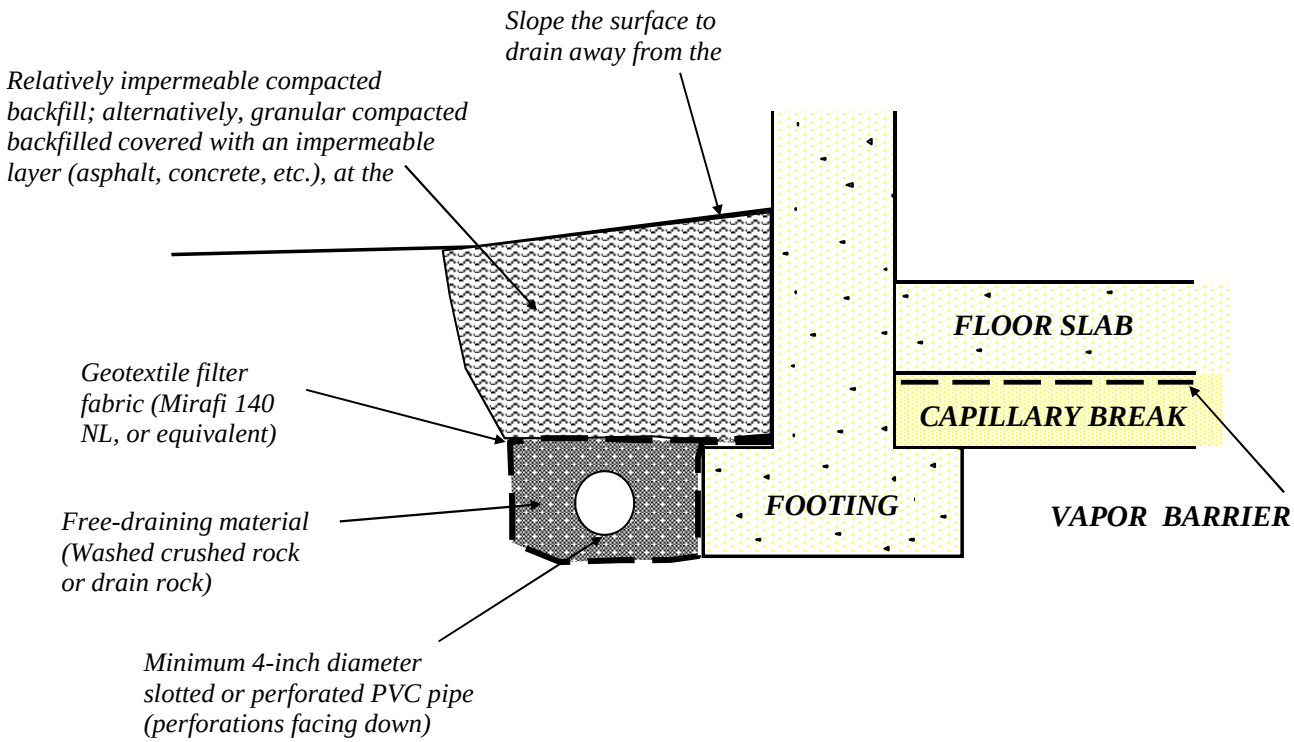

NOT TO SCALE

NOTES:

1.) Perforated or slotted rigid PVC pipe should be tight jointed and laid with perforations or slots down, and with positive gradient toward discharge location(s). The pipe should be placed at or slightly above the elevation of the bottom of the footing. Do not replace rigid PVC pipe with flexible corrugated plastic pipe.

2.) Do not connect roof downspout drains to the footing drain lines. Drain line cleanouts should be installed at appropriate locations to allow inspection and maintenance of the lines after construction.

3.) If the backfill will support sidewalks, driveways, patios, or other structures, it should be compacted to at least 90% of its maximum dry density based on the Modified Proctor test method, except that the top 12 inches of the backfill should be compacted to at least 95% of the maximum dry density.

4.) The geotextile filter fabric should be placed around the drain rock as shown, and not wrapped directly around the pipe.

GEO Group Northwest, Inc.
Geotechnical Engineers, Geologists, & Environmental Scientists

TYPICAL FOOTING DRAIN
PROPOSED RESIDENCE
9705 NE 1ST STREET
BELLEVUE, WASHINGTON

SCALE: NONE	**DATE:** 5/3/2013	**MADE:** KJ	**CHKD:** WC	**JOB NO.** G-3440	**PLATE** 3

APPENDIX A

G-3440

BORING LOGS AND SOIL CLASSIFICATION LEGEND

LEGEND FOR SOIL CLASSIFICATION AND PENETRATION TEST DATA

UNIFIED SOIL CLASSIFICATION SYSTEM (USCS)

MAJOR DIVISION			GROUP SYMBOL	TYPICAL DESCRIPTION	LABORATORY CLASSIFICATION CRITERIA	
COARSE-GRAINED SOILS More Than Half by Weight Larger Than No. 200 Sieve	GRAVELS (More Than Half Coarse Fraction is Larger Than No. 4 Sieve)	CLEAN GRAVELS (little or no fines)	GW	WELL GRADED GRAVELS, GRAVEL-SAND MIXTURE, LITTLE OR NO FINES	CONTENT OF FINES BELOW 5%	Cu = (D60 / D10) greater than 4 Cc = $(D30)^2$ / (D10 * D60) between 1 and 3
			GP	POORLY GRADED GRAVELS, AND GRAVEL-SAND MIXTURES LITTLE OR NO FINES		CLEAN GRAVELS NOT MEETING ABOVE REQUIREMENTS
		DIRTY GRAVELS (with some fines)	GM	SILTY GRAVELS, GRAVEL-SAND-SILT MIXTURES	CONTENT OF FINES EXCEEDS 12%	GM: ATTERBERG LIMITS BELOW "A" LINE. or P.I. LESS THAN 4
			GC	CLAYEY GRAVELS, GRAVEL-SAND-CLAY MIXTURES		GC: ATTERBERG LIMITS ABOVE "A" LINE. or P.I. MORE THAN 7
	SANDS (More Than Half Coarse Fraction is Smaller Than No. 4 Sieve)	CLEAN SANDS (little or no fines)	SW	WELL GRADED SANDS, GRAVELLY SANDS, LITTLE OR NO FINES	CONTENT OF FINES BELOW 5%	Cu = (D60 / D10) greater than 6 Cc = $(D30)^2$ / (D10 * D60) between 1 and 3
			SP	POORLY GRADED SANDS, GRAVELLY SANDS, LITTLE OR NO FINES		CLEAN SANDS NOT MEETING ABOVE REQUIREMENTS
		DIRTY SANDS (with some fines)	SM	SILTY SANDS, SAND-SILT MIXTURES	CONTENT OF FINES EXCEEDS 12%	ATTERBERG LIMITS BELOW "A" LINE with P.I. LESS THAN 4
			SC	CLAYEY SANDS, SAND-CLAY MIXTURES		ATTERBERG LIMITS ABOVE "A" LINE with P.I. MORE THAN 7
FINE-GRAINED SOILS Less Than Half by Weight Larger Than No. 200 Sieve	SILTS (Below A-Line on Plasticity Chart, Negligible Organics)	Liquid Limit < 50%	ML	INORGANIC SILTS, ROCK FLOUR, SANDY SILTS OF SLIGHT PLASTICITY		
		Liquid Limit > 50%	MH	INORGANIC SILTS, MICACEOUS OR DIATOMACEOUS, FINE SANDY OR SILTY SOIL		
	CLAYS (Above A-Line on Plasticity Chart, Negligible Organics)	Liquid Limit < 50%	CL	INORGANIC CLAYS OF LOW PLASTICITY, GRAVELLY, SANDY, OR SILTY CLAYS, CLEAN CLAYS		
		Liquid Limit > 50%	CH	INORGANIC CLAYS OF HIGH PLASTICITY, FAT CLAYS		
	ORGANIC SILTS & CLAYS (Below A-Line on Plasticity Chart)	Liquid Limit < 50%	OL	ORGANIC SILTS AND ORGANIC SILTY CLAYS OF LOW PLASTICITY		
		Liquid Limit > 50%	OH	ORGANIC CLAYS OF HIGH PLASTICITY		
HIGHLY ORGANIC SOILS			Pt	PEAT AND OTHER HIGHLY ORGANIC SOILS		

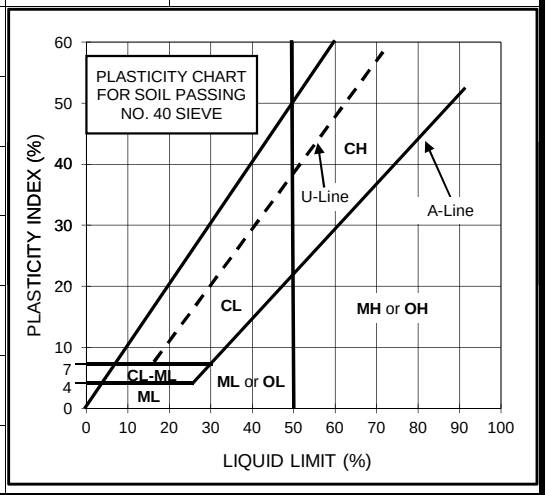

SOIL PARTICLE SIZE

FRACTION	U.S. STANDARD SIEVE			
	Passing		Retained	
	Sieve	Size (mm)	Sieve	Size (mm)
SILT / CLAY	#200	0.075		
SAND				
FINE	#40	0.425	#200	0.075
MEDIUM	#10	2.00	#40	0.425
COARSE	#4	4.75	#10	2.00
GRAVEL				
FINE	0.75"	19	#4	4.75
COARSE	3"	76	0.75"	19
COBBLES	76 mm to 203 mm			
BOULDERS	> 203 mm			
ROCK FRAGMENTS	> 76 mm			
ROCK	>0.76 cubic meter in volume			

GENERAL GUIDANCE FOR ENGINEERING PROPERTIES OF SOILS, BASED ON STANDARD PENETRATION TEST (SPT) DATA

SANDY SOILS				SILTY & CLAYEY SOILS		
Blow Counts N	Relative Density, %	Friction Angle ϕ, degrees	Description	Blow Counts N	Unconfined Strength q_u, tsf	Description
0 - 4	0 -15		Very Loose	< 2	< 0.25	Very soft
4 - 10	15 - 35	26 - 30	Loose	2 - 4	0.25 - 0.50	Soft
10 - 30	35 - 65	28 - 35	Medium Dense	4 - 8	0.50 - 1.00	Medium Stiff
30 - 50	65 - 85	35 - 42	Dense	8 - 15	1.00 - 2.00	Stiff
> 50	85 - 100	38 - 46	Very Dense	15 - 30	2.00 - 4.00	Very Stiff
				> 30	> 4.00	Hard

GEO Group Northwest, Inc.
Geotechnical Engineers, Geologists, & Environmental Scientists
13240 NE 20th Street, Suite 10 Bellevue, WA 98005
Phone (425) 649-8757 Fax (425) 649-8758

PLATE A1

BORING NO. B - 1

Logged By: KJ Date Drilled: 4/23/2013 Surface Elev. 131'
Drilled By: CN

Depth ft.	Elevation	USCS Code	Description	Sample Loc.	Sample No.	SPT Blow Counts	Water Content %	Other Tests/ Comments
		SM	Grass lawn. Underlain with dark brown silty sand and gravel topsoil.			3,2,2 (N=4)	14.4	
		SM	Brown SILTY SAND with gravel, moist, loose, thin layer of fine black organics in sample, massive, possible fill			1,2,2 (N=4)	10.4	
5		SM	Brown SILTY SAND with minor gravel, damp, loose, to very loose, moist to wet at top of sample, possible weathered native soil or fill.			2,2,1 (N=3)	14.2	
		SM	Gray SILTY SAND with gravel, damp, very dense, contains some brownish mottling, massive (GLACIAL TILL).			28,50 (N=50+)	13.3	very hard drilling starting at 7.5'
10		SM	As above, no mottling.			50/3.5" (N=50+)	7.2	
			Depth of boring: 10.5 feet. Drilling Method: Hollow-stem auger. Sampling Method: 2-inch-O.D. standard penetration sampler driven using a 140 lb. hammer and cathead. Groundwater not encountered during drilling.					
15								
20								
25								

LEGEND:
- 2" O.D. SPT Sampler
- 3" O.D. California Sampler
- Water Level noted during drilling
- Water Level measured at later time, as noted

GEO Group Northwest, Inc.
Geotechnical Engineers, Geologists, & Environmental Scientists

BORING LOG

PROPOSED RESIDENCE
9705 NE 1ST STREET
BELLEVUE, WASHINGTON

JOB NO.	DATE	PLATE
G-3440	4/29/2013	A2

BORING NO. B - 2

Logged By: KJ Date Drilled: 4/23/2013 Surface Elev. 138'

Drilled By: CN

Depth ft.	Elevation	USCS Code	Description	Sample Loc.	Sample No.	SPT Blow Counts	Water Content %	Other Tests/ Comments
		SM	Grass lawn. Underlain with brown silty sand and gravel topsoil.			2,3,2 (N=5)	15.3	
		SM	Brown SILTY SAND with minor gravel, moist, loose, massive, some mottling.			1,2,2 (N=4)	13.5	
5		SM	Gray and brown SILTY SAND with minor gravel, damp, loose, horizontal color banding / mottling, massive texture, relatively sandy.			2,3,3 (N=6)	11.4	
		SM	Brown SILTY SAND with minor gravel, damp, loose, contains more silt than above sample, massive.			2,2,2 (N=4)	12.6	
10		SM	As above, moist, poor recovery due to coarse gravel in sampler.			3,4,4 (N=8)	14.2	
		SM	Grayish brown SILTY SAND with minor gravel, moist, loose, mottled.			3,4,4 (N=8)	13.3	
15		SM	Gray SILTY SAND with minor gravel, moist, loose to medium dense, minor brownish mottling, massive.			3,4,6 (N=10)	11.1	
		SM	As above, but no gravel.			3,5,5 (N=10)	13.0	
20		SM/Pt	Gray SAND to SILTY SAND, moist, medium dense, 1" thick peat/organics layer, poor recovery			5,6,7 (N=13)	15.9	
			Possible loose/soft soils or organics, drill rods and sample tube dropped 12" under hammer weight. No sample recovery.			0/12",3 (N=3)	- -	
25								

LEGEND: 2" O.D. SPT Sampler; 3" O.D. California Sampler; Water Level noted during drilling; Water Level measured at later time, as noted

GEO Group Northwest, Inc.
Geotechnical Engineers, Geologists, & Environmental Scientists

BORING LOG

PROPOSED RESIDENCE
9705 NE 1ST STREET
BELLEVUE, WASHINGTON

JOB NO. G-3440 **DATE** 4/29/2013 **PLATE** A3

BORING NO. B - 2

Logged By: KJ Date Drilled: 4/23/2013 Surface Elev. 138'
Drilled By: CN

Depth ft.	Elevation	USCS Code	Description	Sample Loc.	Sample No.	SPT Blow Counts	Water Content %	Other Tests/ Comments
			Driller reported soft conditions at 25'.					
		SM	Gray SILTY SAND with gravel, damp, very dense, sand is mostly fine and medium grained, poor recovery (GLACIAL TILL).			50/3" (N=50+)	9.4	Hard drilling condition starting at 26.5 to 27'.
30			Depth of boring: 28 feet. Drilling Method: Hollow-stem auger. Sampling Method: 2-inch-O.D. standard penetration sampler driven using a 140 lb. hammer and cathead. Groundwater not encountered during drilling.					
35								
40								
45								
50								

LEGEND:
- 2" O.D. SPT Sampler
- 3" O.D. California Sampler
- Water Level noted during drilling
- Water Level measured at later time, as noted

GEO Group Northwest, Inc.
Geotechnical Engineers, Geologists, & Environmental Scientists

BORING LOG

PROPOSED RESIDENCE
9705 NE 1ST STREET
BELLEVUE, WASHINGTON

JOB NO.	DATE	PLATE
G-3440	4/29/2013	A4

Greenforest Incorporated
Consulting Arborist

7/29/2013

Evergreen Point Properties LLC
Eric Whiting
P.O. BOX 85
BELLEVUE WA 98009

RE: Tree Risk Assessment, NE First Street, Bellevue WA

You contacted me on 7/17/2013 and contracted my services as a consulting arborist. You are in the permit application phase of a demolition/new single-family construction project, located at 9705 NE 1st Street, Bellevue, WA 98004. As a part of the permit process, you are required to complete a Critical Areas Permit application because of a steep slope located on the property.

Michael Paine, City of Bellevue Environmental Planning Manager, requires that a Certified Arborist assess the health of five trees which are located along the top of the steep slope. Mr. Paine wants to reasonably confirm that the trees present no obvious danger to the proposed home, which will be located in approximately the same footprint as the existing house.

My assignment is to perform a tree risk assessment. I met with Dana Oliver of Overbrook Construction, Inc., on 7/23/2013, who oriented me to the site and described the proposed project.

I performed a Level 2, or basic risk assessment. This is the standard assessment that is performed by arborists in response to a client's request for tree risk assessment and follows Best Management Practices.[1] These BMPs define the most current methods for tree risk assessment in the industry.

The purpose of this report is to satisfy City requirements and is to be used in obtaining the necessary permits.

[1] Companion publication to the ANSI A300 Part 9: *Tree Shrub and Other woody Plant Management – Standard Practices, Tree Risk Assessment*. 2011. ISA.

Observations

Five subject trees stand on the sloped area just east of the existing (and propose) house. (See attached sketch) All the trees appear healthy. I measured the trunk diameter (DBH), canopy width (dripline), tree height and live crown ratio. The fir tree has shed scaffold branches in past as evidenced by broken branch stubs along the trunk. The top of the tree appears to have been cut, or failed in past, and multiple young leaders are growing at the apex. The tree has no other visible defects.

The native cedar trees are young and have great structure. Both are bound with nylon cord around the trunks, and are girdled. In some areas, the cord is completely engulfed in the tree's bark. I cut the cord around each tree to release the tension. Although the cord is still in place, the trees will be able to expand in girth and push the cord sections outward. There is no further action required, and within 7-10 years there will be little to no evidence that the girdling ever occurred. These two trees have no visible structural defects.

The cherry trees are large and mature. One is covered in ivy, which could obscure an otherwise obvious defect. Both trees are infested with the insect cherry bark tortrix. The cherry tree nearest the street has multiple leaders in the upper canopy with attachments that could increase the likelihood of failure. The trunks of both trees appear and sound solid.

The table below lists and summarizes the information I collected on each tree.

Tree No.	Species	DBH	Dripline	Height	LCR
1	Doug-fir	25"	35'	85'	35%
2	Western red-cedar	10	15	55	90%
3	Western red-cedar	10	15	55	90%
4	Cherry	24	30	80	40%
5	Cherry	26	35	80	90%

The target for this assessment is the proposed new house on the site, which has a high or constant occupancy rate. The part most likely to fail at this time on the fir tree are scaffold branches, and more likely during strong winds. Because of the position of the tree relative to the house, any branches that fail could strike the house or fall onto the slope with near equal likelihood.

The cedar trees have no visible defects, and foliage is the only part I expect to fall from these trees during the next year.

Both cherries have large canopies and can potentially catch significant wind. The smaller cherry has ivy covering its trunk, and removing the ivy will reduce wind load against the tree's trunk. This tree

has some dead branches (<2" diameter) in its upper canopy and this is the most likely part of the tree to fail in the next year.

The larger cherry tree has a much wider and fuller canopy. In the center of the canopy on the south side are a few competing leaders that have matured from watersprouts decades ago. The attachment of these leaders appears to be the current weak link in this tree's structure, and it's not a serious problem. In the event of failure, these branches are couched between the two trees, and the most likely target is the slope beneath the tree.

The following table lists the tree risk categories for the 5 subject trees. All of which are at *low* risk.

Tree	Likelihood of Failure	Likelihood of Impacting Target	Likelihood of Failure and Target Impact	Consequence	**Risk Category**
1	Probable	Medium	Somewhat likely	Minor	Low
2	Improbable	Very Low	Unlikely	Negligible	Low
3	Improbable	Very Low	Unlikely	Negligible	Low
4	Improbable	Low	Unlikely	Negligible	Low
5	Probable	Low	Unlikely	Negligible	Low

Recommendations

1. Within the next 3-5 years, inspect and thin as necessary the multiple leaders in the top of the Douglas-fir.
2. Inspect the cedar trees in one year to monitor the level of girdling and the success of the cord cutting.
3. Remove the ivy from the cherry tree and prune deadwood from canopy.

I performed a standard, basic risk assessment. This assessment is limited to what is visible at the time of the inspection. The only invasive procedure performed was cutting the cord from around the cedar trees, and for this I used a chisel and cut into the tree in 5 locations around each trunk, severing the nylon cord.

There is always residual risk with trees, as all standing trees possess the risk of failure. Trees can fail at any time, with or without obvious defects, and with or without applied stress. Any treatments performed to abate current defects do not eliminate said defects, nor does it provide any guarantee against failure. Sometimes trees fail because they are trees.

The consultant does not assume any liability for the subject trees and does not represent the transfer of such for any risks associated with the trees from the landowner to the consultant. **Risk management is solely the responsibility of the landowner**. Trees are biological systems and change over time; therefore, future inspections are required and are the responsibility of the landowner to initiate.

Construction activities can significantly affect the condition of retained trees. All retained trees should be inspected after construction is completed, and then inspected regularly as part of routine maintenance. I recommend biannual inspection for all retained trees.

Thank you for your business. Please let me know if you have any further questions or concerns.

Sincerely,

GreenForest, Inc.

By Favero Greenforest, M. S.

ISA Certified Arborist # PN -0143A
ASCA Registered Consulting Arborist® #379
PNW-ISA Certified Tree Risk Assessor #579

Attachments:

1. Assumptions and Limiting Conditions
2. Tree Risk Categorization
3. Site Sketch

Attachment No. 1 - Assumptions & Limiting Conditions

1) A field examination of the site was made 7/23/2013. My observations and conclusions are as of that date.

2) Care has been taken to obtain all information from reliable sources. All data has been verified insofar as possible; however, the consultant/arborist can neither guarantee nor be responsible for the accuracy of information provided by others.

3) Sketches, drawings and photographs in this report, being intended as visual aids, are not necessarily to scale and should not be construed as engineering or architectural report of surveys unless expressed otherwise.

4) The consultant/appraiser shall not be required to give testimony or to attend court by reason of this report unless subsequent contractual arrangements are made.

5) Loss or alteration of any part of this report invalidates the entire report.

6) Unless required by law otherwise, possession of this report or a copy thereof does not imply right of publication or use for any purpose by any other than the person to whom it is addressed, without the prior expressed written or verbal consent of the consultant/appraiser.

7) This report and any values/opinions expressed herein represent the opinion of the consultant/appraiser, and the consultant's/appraiser's fee is in no way contingent upon the reporting of a specified value, a stipulated result, the occurrence of a subsequent event, nor upon any finding to be reported.

8) Ownership and use of consultant's documents, work product and deliverables shall pass to the Client only when ALL fees have been paid.

Attachment No. 2 - Tree Risk Categorization

The following text and tables provide criteria and categories for the columns in the tree risk table in the body of the report.

Likelihood of Failure (Column 1)

Improbable- The tree or branch is not likely to fail during normal weather conditions and may not fail in many severe weather conditions within the specified time period.
Possible- Failure could occur, but it is unlikely during normal weather conditions within the specified time period.
Probable- Failure may be expected under normal weather conditions within the specified time period.
Imminent- Failure has started or is most likely to occur in the near future, even if there is no significant wind or increased loads.

Likelihood of Impacting a Target (Column 2)

Very low- the chance of the failed tree or branch impacting the specified target is remote. This is the case in a rarely used site fully exposed to the assessed tree, or an occasionally used site that is partially protected by trees or structures.
Low- It is not likely that the failed tree or branch will impact the target. This is the case in an occasionally used area that is fully exposed to the assessed tree; a frequently used area that is partially exposed to the assessed tree; or a constant target that is well protected from the assessed tree.
Medium- The failed tree or branch may or may not impact the target, with nearly equal likelihood. This is the case in a frequently used area that is fully exposed on one side to the assessed tree, or a constantly occupied area that is partially protected from the assessed tree.
High- The failed tree or branch will most likely impact the target. This is the case when a fixed target is fully exposed to the assessed tree or near a high-use road or walkway with an adjacent street tree.

(This table is used to derive column 3.)

Likelihood of Failure	**Likelihood of Impacting Target**			
	Very Low	**Low**	**Medium**	**High**
Imminent	Unlikely	Somewhat likely	Likely	Very likely
Probable	Unlikely	Unlikely	Somewhat likely	Likely
Possible	Unlikely	Unlikely	Unlikely	Somewhat likely
Improbable	Unlikely	Unlikely	Unlikely	Unlikely

Categorizing the Consequences of Failure

Based on the most likely failure scenario (Likelihood of Tree or Branch Failure AND Likelihood of Impacting a Target), the consequence of that likelihood is determined as described below.

Negligible consequences are those that involve low-value property damage or disruption that can be replaced or repaired, and do not involve personal injury.
Minor consequences are those that involve low-to-moderate property damage, small disruptions to traffic or a communications utility, or very minor injury.
Significant consequences are those that involve property damage of moderate-to-high value, considerable disruption, or personal injury.
Severe consequences are those that could involve serious personal injury or death, damage to high-value property, or disruption of important activities.

Once the consequence of the failure is determined, this table is used to derive the risk rating for each tree.

Likelihood of Tree Failure and Impacting Target	**Consequences**			
	Negligible	**Minor**	**Significant**	**Severe**
Very likely	Low	Moderate	High	Extreme
Likely	Low	Moderate	High	High
Somewhat likely	Low	Low	Moderate	Moderate
Unlikely	Low	Low	Low	Low

Tree Risk Rating

Extreme- The extreme-risk category applies in situations in which failure is *imminent* and there is a high likelihood of impacting the target, and the consequences of the failure are "severe". The tree risk assessor should recommend mitigation measures be taken as soon as possible. In some cases this may mean immediate restriction of access to the target zone area to avoid injury to people.
High- High-risk situations are those for which consequences are "significant" and the likelihood is "very likely" or 'likely," or consequences are "severe" and likelihood is "likely." This combination of likelihood and consequences indicates that the tree risk assessor should recommend mitigation measures be taken. The decision for mitigation and timing of treatment depends upon the risk tolerance of the tree owner or manager.
Moderate- Moderate-risk situations are those for which consequences are "minor" and likelihood is "very likely" or "likely"; or likelihood is "somewhat likely" and consequences are "significant" or "severe". The tree risk assessor any recommend mitigation and/or retaining

and monitoring. The decision for mitigation and timing of treatment depends upon the risk tolerance of the tree owner or manager.

Low- The low-risk category applies when consequences are "negligible" and likelihood is "unlikely"; or consequences are "minor" and likelihood is "somewhat likely." Some trees with this level of risk may benefit from mitigation or maintenance measures, but immediate action is not usually required.

Risk Mitigation

- Extreme-risk trees should be mitigated as soon as possible. Immediate action may be required to restrict access to the target zone.
- High-risk trees should be mitigated as soon as it is practical.
- Moderate-risk trees may be mitigated and/or retained and monitored. Mitigation may be conducted when budget, work schedule, or pruning cycle allows, preferably before seasonal storms develop.
- Low-risk trees should be retained and monitored (if appropriate) and/or mitigated, if deemed necessary, when the budget, work schedule, or pruning cycle allows.

The following terms are used in this risk assessment:

Risk is the combination of the likelihood of an event and the severity of the potential consequences.

Likelihood is the chance of an event occurring.

Targets (*risks targets*) are people, property, or activities that could be injured, damaged, or disrupted by a tree.

Failure (tree failure) is the breakage of stems, branches, roots or loss of mechanical support in the root system.

Likelihood is the chance of an event occurring. In the context of tree failure, likelihood refers to: 1) the chance of a tree failure occurring, 2) the chance of impacting a specific target, and 3) the combination of the likelihood of a tree failing and the likelihood of impacting a specific target.

Consequences are the effects or outcome of an event. In tree risk assessment, consequences include personal injury, property damage, or disruption of activities due to the event.

Attachment No. 3 – Site Sketch
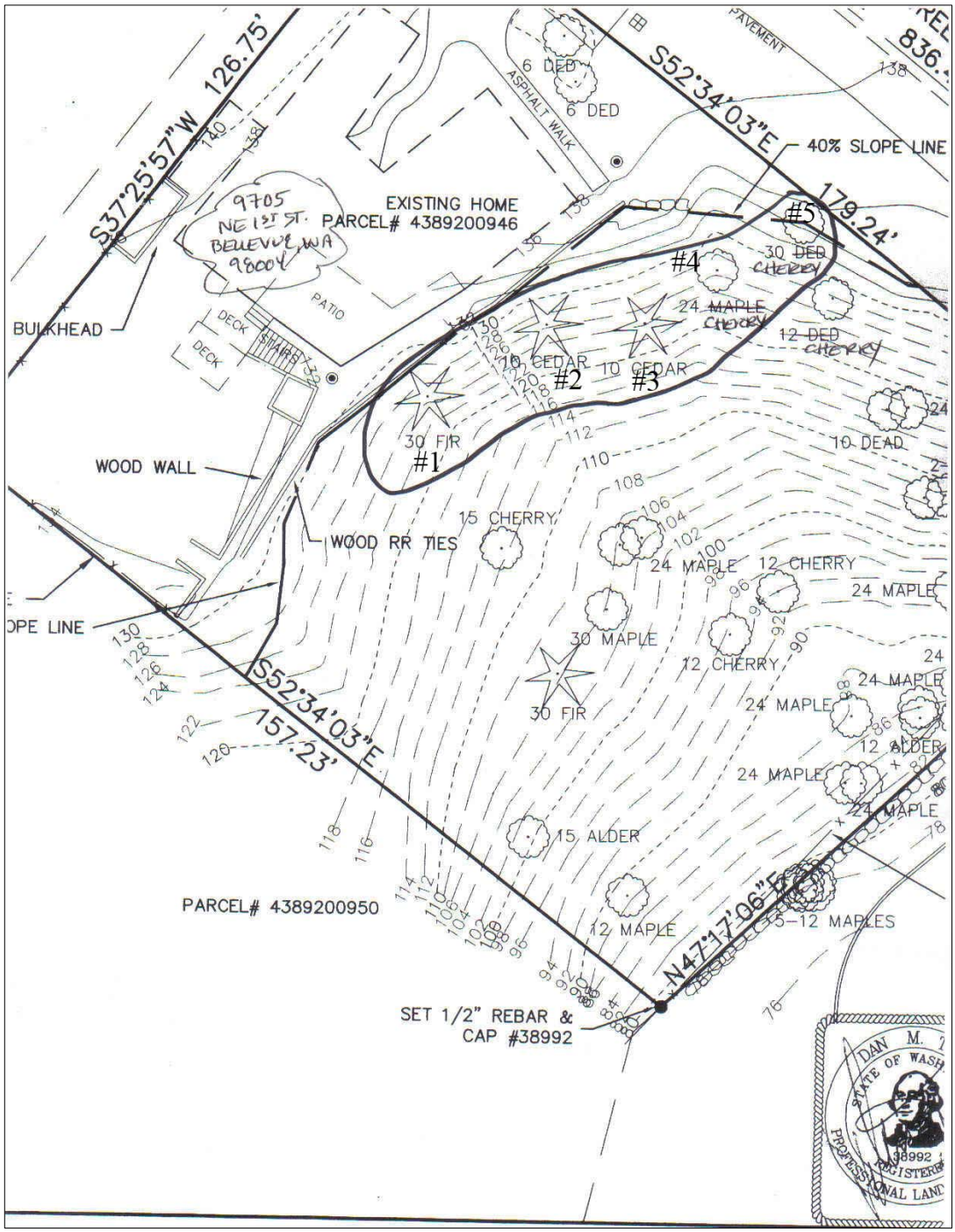
Site sketch showing location of 5 retained trees.