DEVELOPMENT SERVICES DEPARTMENT
ENVIRONMENTAL COORDINATOR
11511 MAIN ST., P.O. BOX 90012
BELLEVUE, WA 98009-9012

DETERMINATION OF NON-SIGNIFICANCE

PROPONENT: AT&T Mobility

LOCATION OF PROPOSAL: 1200 164th Avenue SE

DESCRIPTION OF PROPOSAL: Request for ACU approval to modify an existing wireless communications facility. Modifications include extending the existing utility pole by 8-feet and adding 3 panel antennas. Additional ancillary equipment will be placed within the existing underground equipment vault.

FILE NUMBERS: 12-108579-LA

The Environmental Coordinator of the City of Bellevue has determined that this proposal does not have a probable significant adverse impact upon the environment. An Environmental Impact Statement (EIS) is not required under RCW 43.21C.030(2)(C). This decision was made after the Bellevue Environmental Coordinator reviewed the completed environmental checklist and information filed with the Land Use Division of the Development Services Department. This information is available to the public on request.

☐ There is no comment period for this DNS. There is a 14-day appeal period. Only persons who submitted written comments before the DNS was issued may appeal the decision. A written appeal must be filed in the City Clerk's office by 5:00 p.m. on _____.

☒ This DNS is issued after using the optional DNS process in WAC 197-11-355. There is no further comment period on the DNS. There is a 14-day appeal period. Only persons who submitted written comments before the DNS was issued may appeal the decision. A written appeal must be filed in the City Clerk's Office by 5 p.m. on June 21, 2012.

☐ This DNS is issued under WAC 197-11-340(2) and is subject to a 14-day comment period from the date below. Comments must be submitted by 5 p.m. on _____. This DNS is also subject to appeal. A written appeal must be filed in the City Clerk's Office by 5 p.m. on _____.

This DNS may be withdrawn at any time if the proposal is modified so that it is likely to have significant adverse environmental impacts; if there is significant new information indicating, or on, a proposals probable significant adverse environmental impacts (unless a non-exempt license has been issued if the proposal is a private project): or if the DNS was procured by misrepresentation or lack of material disclosure.

Carol V Helland
Environmental Coordinator

6/7/2012
Date

OTHERS TO RECEIVE THIS DOCUMENT:
State Department of Fish and Wildlife
State Department of Ecology,
Army Corps of Engineers
Attorney General
Muckleshoot Indian Tribe

City of Bellevue
Development Services Department
Land Use Division Staff Report

Proposal Name:	AT&T Mobility LTE-SB 1636
Proposal Address:	1200 164th Avenue SE
Proposal Description:	Request for ACU approval to modify an existing Wireless Communications Facility (WCF). Modifications include extending the existing utility pole by 8-feet and adding 3 panel antennas. Additional ancillary equipment will be placed within the existing underground equipment vault.
File Number:	12-108579-LA, Administrative Conditional Use
Planner:	Sally Nichols, Associate Planner
Applicant:	AT&T Christine Contreras, Ryka Consulting
Decisions Included:	Administrative Conditional Use Approval (Process II, Land Use Code 20.30E)

State Environmental Policy Act Threshold Determination: **Determination of Non-Significance (DNS)**

Carol V Helland

Carol V. Helland, Environmental Coordinator
Development Services Department

Director's Decision: **Approval with Conditions**

Carol V Helland

Mike Brennan, Director
Development Services Department

Notice of Application:	April 5, 2012
14-day Comment Period:	April 19, 2012
Decision Publication Date:	June 7, 2012
Appeal Deadline:	June 21, 2012

For information on how to appeal the project, visit the Permit Center at City Hall or call (425) 452-6864. Appeal of the decision must be received in the City Clerk's office by 5 p.m. on the date noted for the appeal deadline.

I. Request/Proposal Description

A. Request

The applicant (AT&T Mobility) is requesting administrative conditional use approval to expand an existing wireless communications facility (WCF). The applicant is proposing to extend an existing 52-foot tall PSE pole (which currently supports three WCF antennas) by eight feet. Three new LTE panel antennas will be flush-mounted on this extension and painted to match the pole. Proposed new ancillary equipment, including one new equipment cabinet, will be placed in the existing underground vault and will be screened with the existing mature vegetation that was required per a condition of approval for the existing WCF. This WCF upgrade will allow the applicant to expand its high speed data networks to meet the needs of residents in the Sammamish/East Lake Hills neighborhood.

Figure 1 – Proposal Site Plan

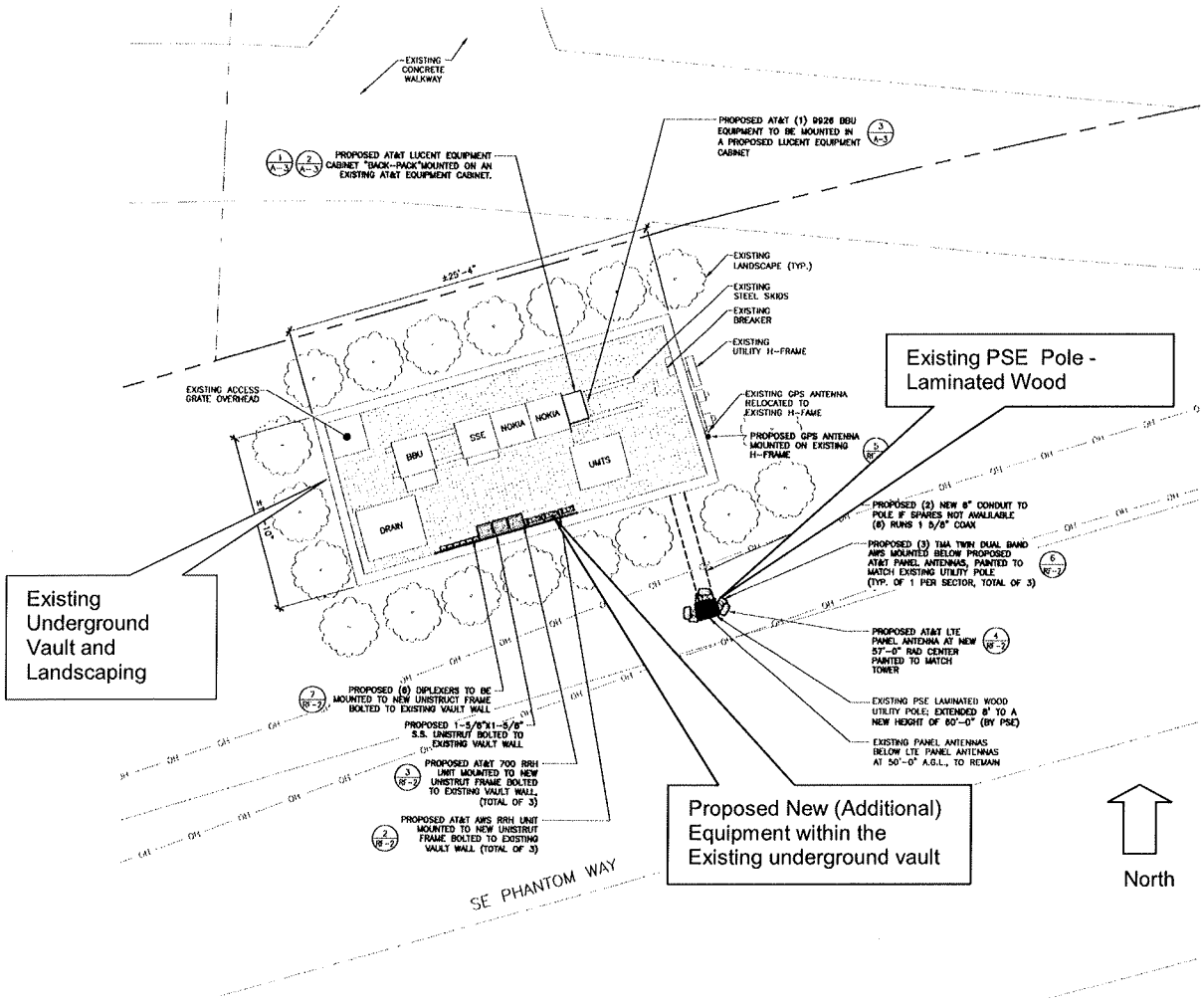

Figure 2
South Elevation – Looking North from SE Phantom Way

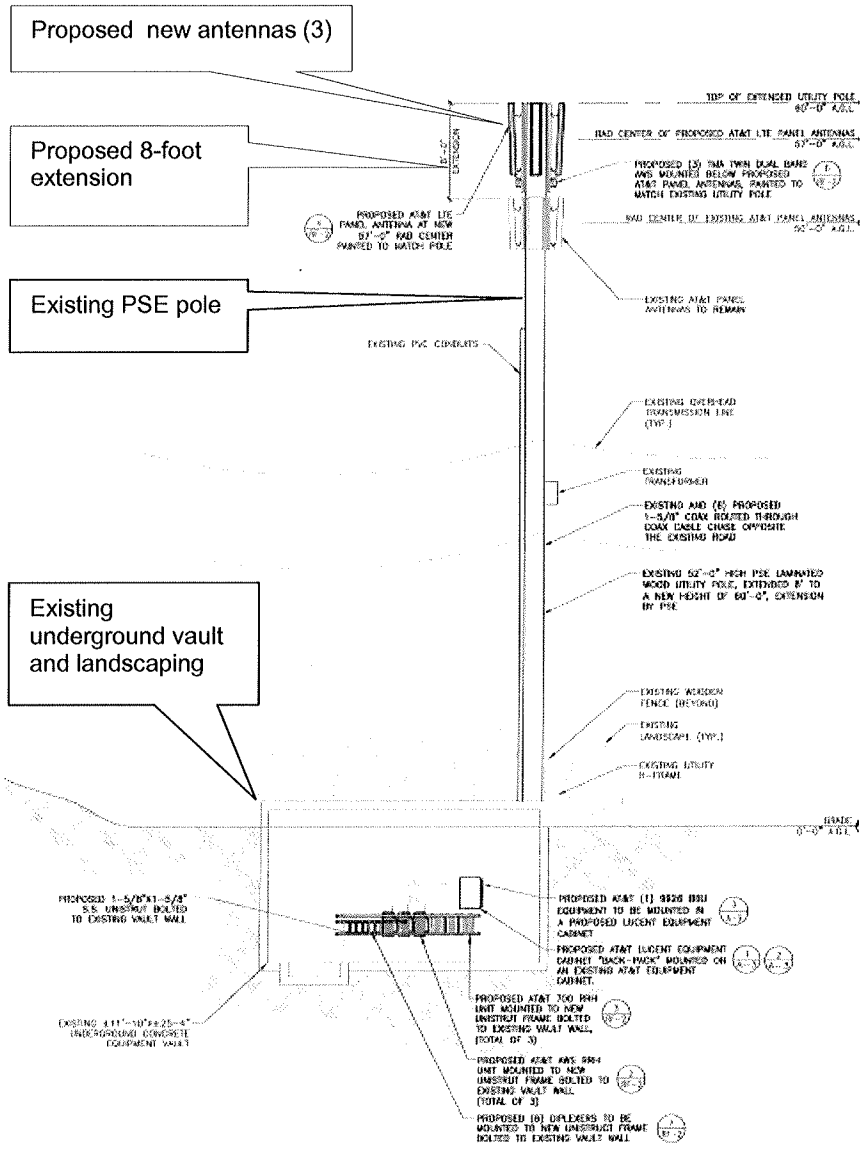

B. Process:

The existing WCF was approved through an Administrative Conditional Use (ACU) - #05-138167-LA. Land Use Review is required for this expansion because the proposal will add height to the existing support structure (PSE pole) within a residential land use district. However, because the WCF is not with 520-feet of any other WCF located either in the public right-of-way or on property owned by the City, the proposal will require review as a new ACU instead of a full Conditional Use. SEPA review will also be required. The ACU approval and SEPA Threshold Determination are Process II decisions made by the Director of the Development Services Department. Both include public

noticing with a minimum 14-day comment period. The Director's decision shall be written in a staff report to indicate whether the application has been approved, approved with conditions, or denied. The decision will be publically noticed with a mandatory 14-day appeal period. Process II decisions may be appealed and the appeal shall be heard at a public hearing before the City Hearing Examiner.

II. Site Description and Zoning

A. Site Description:

The existing laminated wood (glu-lam) pole, three WCF antennas, and underground equipment vault are located within the public right-of-way in a single family residential zoning district, near the intersection of 164th Avenue SE and SE Phantom Way. This location is along the southern border of the Lake Hills Community Park. A paved pedestrian trail for this park also runs

Figure 3 - Aerial Photograph/Site Context

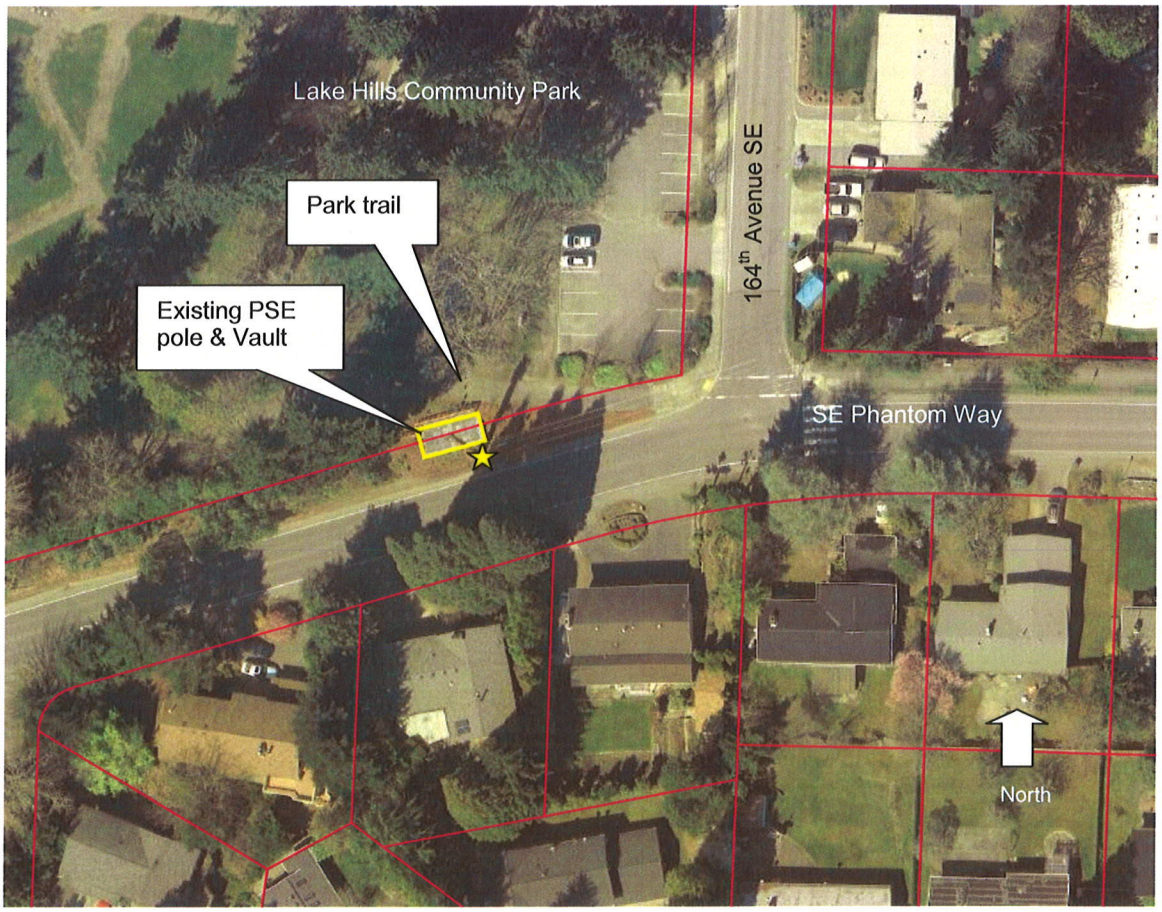

along SE Phantom Way, to the north of the existing underground vault. The existing dense planting of landscape material, required for the existing WCF, effectively screens the vault. Because no changes are proposed to the exterior of the vault, this landscaping will not be altered as a result of this proposal. In addition, there is a fairly dense stand of evergreen trees to the west of the pole location which further help to hide the pole when viewed from the east.

Figure 4 – Site Photos

Looking east on Phantom Way at the pole and screened vault

Looking west on Phantom Way

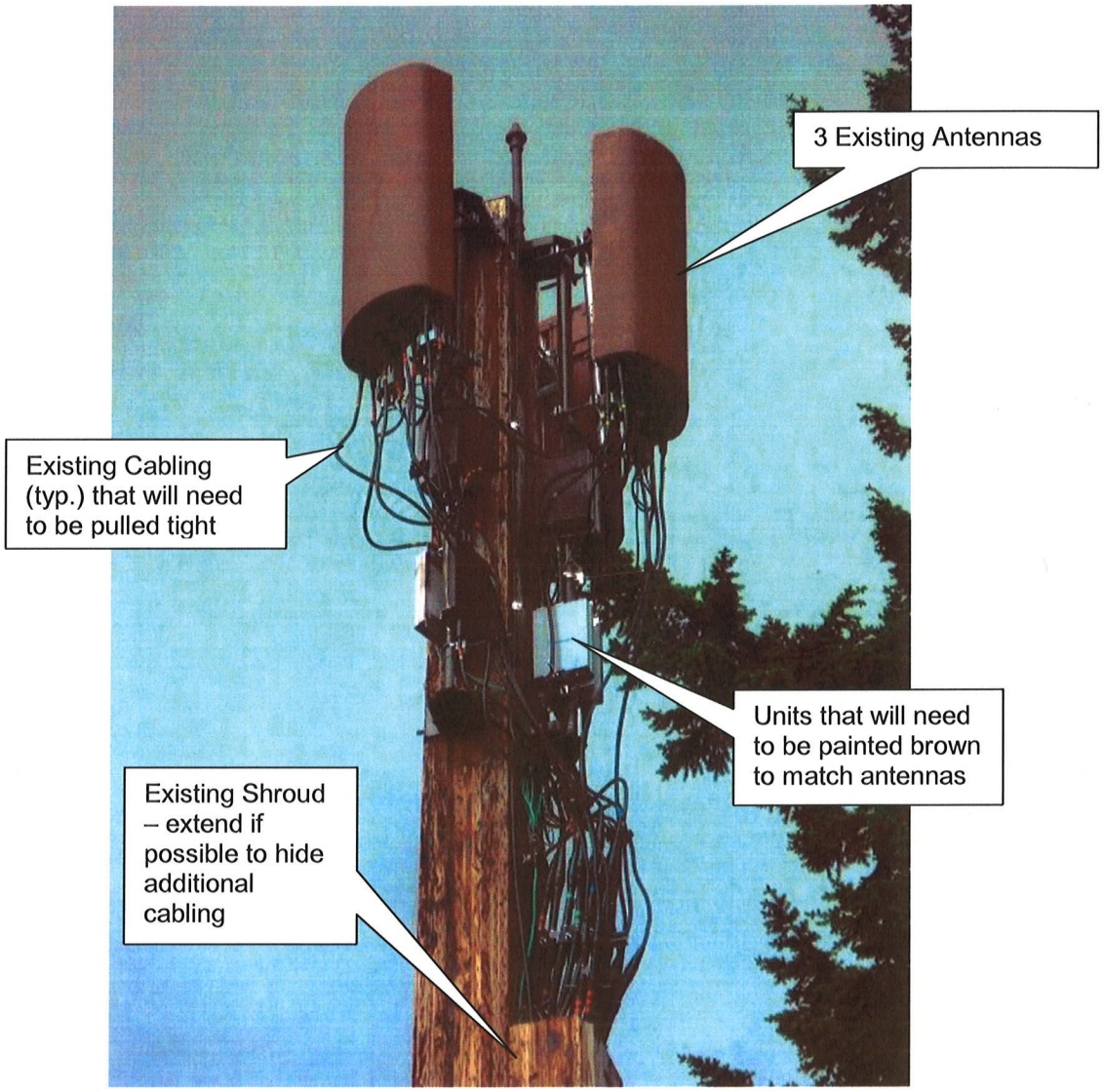

Existing Conditions on Pole

In addition, there are existing conditions on the pole that will need to be addressed along with the addition of the three new antennas. The existing cabling, as well as any new cabling, will need to be pulled tight and the shroud extended to hide as much as the cabling as possible. All antennas and equipment on the pole, either existing or proposed, will need to be painted brown to match the pole. As shown above, there are some units that are still silver in color and they stand out. **Refer to Condition of Approval regarding antenna and equipment color and pole extension color and material and cabling/shroud in Section VII of this report.**

B. Zoning and Context

The pole is located within the R-5, single-family land use district. Adjacent uses include the following:

North: R-5: The pole lies along the southern edge of the Lake Hills Community Park.
South: R-3.5: Across Phantom Way is an existing single-family neighborhood. An R-1.8 single-family neighborhood lies to the southwest.
East: R-5: Lake Hills Community Park
West: R-5 and R-3.5: Single-family neighborhoods.

Figure 5 - Zoning Map

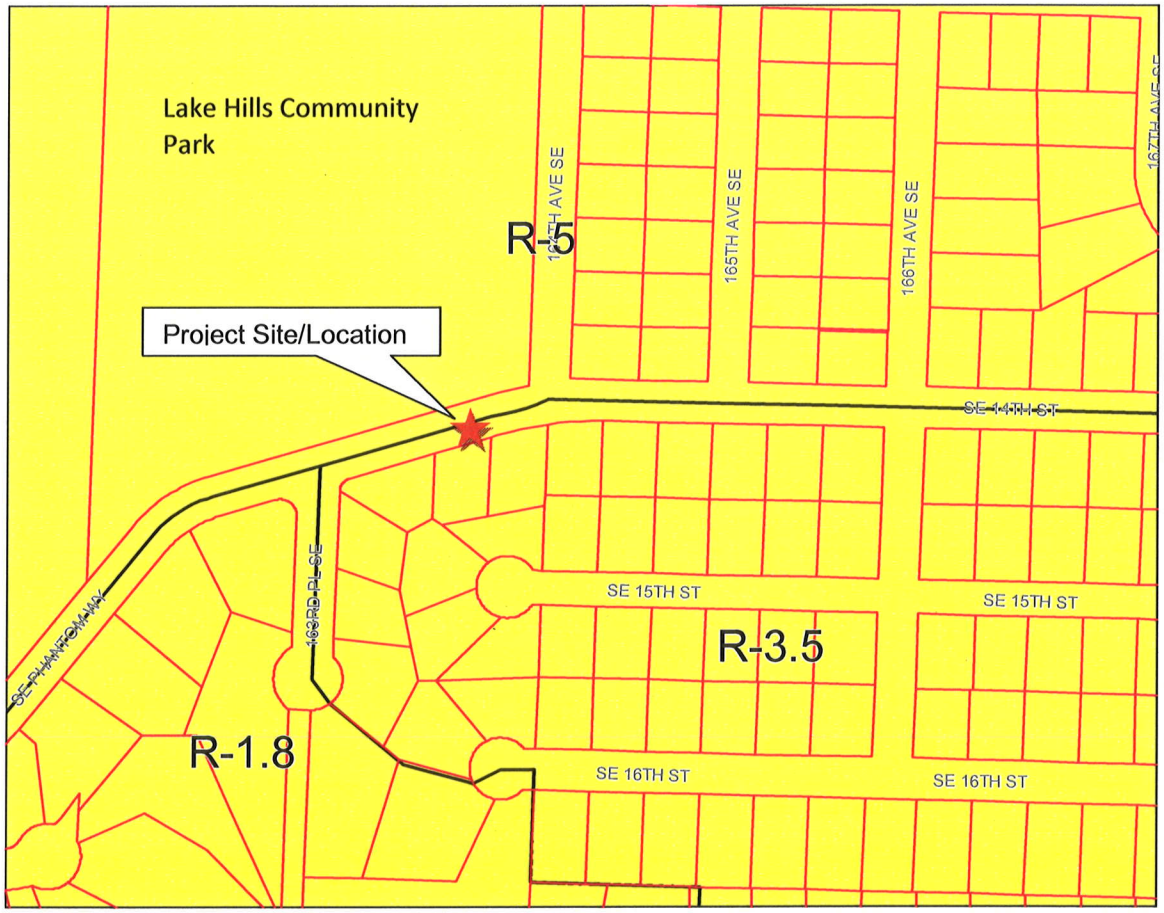

III. Environmental Impacts of the Proposal

The environmental review indicates no probability of significant adverse environmental impacts occurring as a result of the proposal. The Environmental Checklist adequately discloses expected environmental impacts associated with the project. The Checklist is available for public viewing in the project file in the

Record's Office at Bellevue City Hall. The City codes and requirements, including the Clear and Grade Code, Utility Code, Land Use Code, Noise Ordinance, Building Code and other construction codes adequately mitigate expected environmental impacts. Therefore, issuance of a Determination of Non-Significance (DNS) is the appropriate threshold determination under the State Environmental Policy Act (SEPA) requirements.

IV. Public Comments

The City initially notified the public of this proposal on April 5, 2012 with mailed notice and publication in the *Weekly Permit Bulletin.* One, double-sided public information sign was installed on the site on the same day. No comments were received at the time of this writing.

V. Applicable Decision Criteria / Findings and Conclusions

Compliance with the decision criteria of Land Use Code Section 20.30E.140 (Administrative Conditional Use Permit) is discussed below.

A. The administrative conditional use is consistent with the Comprehensive Plan.

As conditioned, the proposal is consistent with the City of Bellevue's Comprehensive Plan regarding wireless communications facilities. The Comprehensive Plan Utilities Policies listed below are especially relevant to the City's decision on this application:

Policy UT-40: Requires the reasonable screening and/or architecturally compatible integration of all new above-ground facilities.
Policy UT-41: Protect Bellevue's aesthetic quality and infrastructure investment from unnecessary degradation caused by the construction of telecommunication infrastructure.
Policy UT-53: Requires all utility equipment support facilities to be aesthetically compatible with the area in which they are placed by using landscape screening and/or architecturally compatible details and integration.
Policy UT-55: Requires the placement of personal wireless communication facilities in a manner that minimizes the adverse impacts on adjacent land uses.

Finding: Significant improvements were previously made when the existing WCF was installed. The antennas were placed on a new wooden, glu-lam pole and they were painted to match the pole. The equipment vault was placed underground and landscaping around the vault effectively screened it from the public right of way and Lake Hill Community Park. Because there will be no exterior changes to the vault, no additional landscaping will be necessary. **Refer to Figure 2 in Section 4 of this report for photos of the existing condition.**

As conditioned, the pole extension will be of a similar material and color as the pole and the new antennas will be painted to match the existing utility pole and existing antennas. In addition, the existing three antennas will be required to be repainted so that all six antennas will have exactly the same color. **Refer to Condition of approval regarding antenna color/pole extension color and materials in Section VII of this report.**

Policy UT-43: Encourages consolidation on existing facilities where reasonably feasible and where such consolidation leads to fewer impacts than would construction of separate facilities.

Finding: The proposal involves consolidation of facilities on an existing utility pole that currently has one WCF with three antennas. Therefore, no new pole in another location will be required.

Policy UT-60: Minimize visual impact of personal wireless communication facilities by encouraging deployment in land use districts in the following preferred and descending order when possible, considering the provider's coverage needs: 1) Non-residential land use districts, except Transition Areas; 2) Transition Areas; 3) Multifamily (R-20 and R-30) districts; and 4) and Park site and Residential districts.

Finding: The entire coverage area as shown in the submitted search ring for this project consists of residential properties that are important to AT&T's coverage objectives. Thus, the location needs to be within this single family zoning district and no alternative, non-residential locations would have meet AT&T's functional needs.

Figure 6 – Search Ring (before and after)

Without SB1636 Lake Hills Park Coverage Map

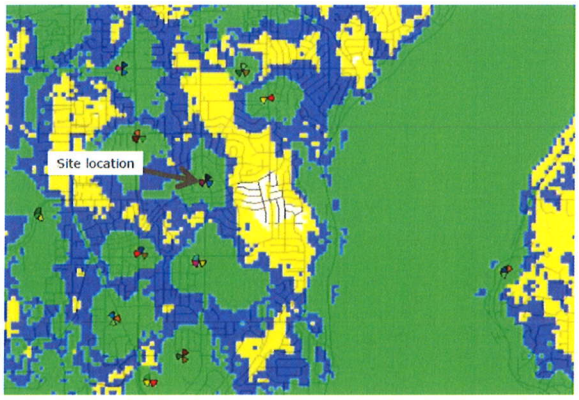

With SB1636 Lake Hills Park Coverage Map

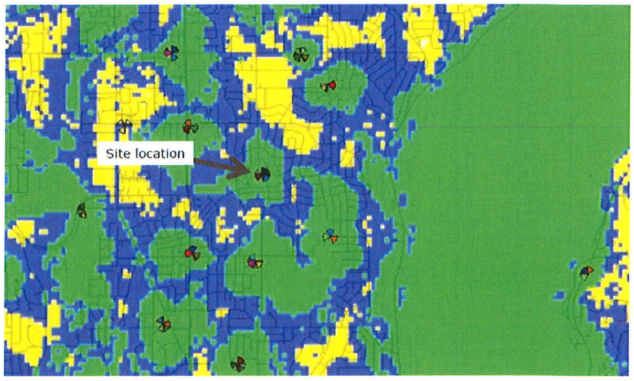

Legend – Service Provided
Green: Indoor
Blue: In-Car
Yellow: On-Street

Policy UT-61: Minimize visual impact of personal wireless communication facilities by encouraging system designs in the following preferred and descending order: 1) attached to public facility structures, building mounted, or integrated with utility poles, light standards, and signal supports; 2) co-located on utility poles, light standards, signal supports; and 3) free standing towers.

Finding: This proposal will be co-located on an existing PSE utility pole where this is already a WCF with three antennas. Co-locating on one existing pole is preferable to construction an entirely new WCF in another location.

B. The design is compatible with and responds to the existing or intended character, appearance, quality of development and physical characteristics of the subject property and immediate vicinity;

Finding: To ensure that the facility is compatible with property in the immediate vicinity, the proposal incorporates the following measures:

1) The eight-foot tall extension to the existing wood laminate pole will be of a similar material and color (glu-lam) as the existing pole.
2) The pole height will be increased from 52 feet to 60 feet and is the minimum necessary to add three more antennas while still providing for the effective functioning of the system. The 8-foot height increase is allowed with an administrative conditional use permit because it is the minimum necessary for effective functioning of the WCF as certified by a licensed engineer. The height is just a little taller than the height of the antennas and the 3 tower-mounted amplifier (Twin Dual Band ASW) units mounted below .
3) The three panel antennas and ancillary equipment will be painted dark brown to match the replacement pole. Because paint fades over time, the existing antennas will also need to be repainted at the same time as the new antennas to ensure a consistent color on all six antennas. The proposed antenna styles, attachment methods, and paint treatment will result in a facility that will be as low-profile in appearance as possible.
4) The mechanical equipment will be located in the existing underground equipment vault, which is already adequately screened with mature landscaping.
5) Coaxial cables will be routed entirely within the shroud attached to the pole and all exposed cables, both existing and proposed, shall be pulled tight.
6) The antennas will be flush-mounted to the pole such that the backs of the antennas will be no more than 6 inches from the pole.

Refer to Condition of Approval regarding antenna and equipment color and pole extension color and material, antenna mounting, and cabling/shroud in Section VII of this report.

C. The administrative conditional use will be served by adequate public facilities including streets, fire protection, and utilities.

Finding: The replacement pole and associated equipment cabinet will be located within the right of way, in a neighborhood that is already served by adequate public facilities, including streets, fire protection, and utilities.

The Fire Department has reviewed this application and has determined that there are no substantial concerns. **Refer to Conditions of Approval regarding existing City of Bellevue radio systems and interference in Section VII of this Staff Report.**

D. The administrative conditional use will not be materially detrimental to uses or property in the immediate vicinity of the subject property; and

Finding: The extension of an existing glu-lam utility pole and the addition of three antennas will result in a WCF that will not substantially change the impact of the existing WCF. A condition of approval will require that the pole extension match the existing pole material and color and that the antennas be painted to match the pole. By doing so, the project will not be materially detrimental to uses or property in the neighborhood.

Finally, the facility will be removed when it ceases to be operational or falls into disrepair and is not maintained, or if the utility support structure is removed or placed underground. **Refer to Condition of Approval regarding antenna and equipment color and pole extension color and material, the removal of abandoned sites, and removal upon undergrounding in Section VII of this staff report.**

E. The administrative conditional use complies with the applicable requirements for a wireless communication facility as provided by the Land Use Code 20.20.195, including location and design preferences.

Finding: As conditioned, the proposed wireless facility complies with the location and design preferences as detailed in LUC 20.20.195. Further, the proposal meets all specific Land Use Code requirements applicable to non-exempt wireless communications facilities per LUC 20.20.195.D, as summarized below.

1. Height: The pole height will be increased by eight (8) feet, from the existing 52 feet to 60 feet. The height is necessary to enable the three additional antennas to achieve AT&T's functional needs and provide coverage without interference from surrounding trees. The height is roughly as tall each antenna and the amplifier mounted below. Although the proposed pole height exceeds the maximum height allowed for an exempt WCF in a residential land use district, it is the minimum necessary for effective functioning of the provider's network, as certified by the provider's licensed radio frequency (RF) engineer. The certification letter is available in the project file at the Record's Office in Bellevue City Hall.

2. **WCF Location and Design**

   a. **Preferred Location (LUC 20.20.195D.2.a):**
   Located within a single family residential land use district, the proposal falls within the least preferred location according to the siting criteria of LUC 20.20.195.D.2.a. However, while non-residential property would be a preferred location, no such option exists given the coverage area requirements for this application; the coverage area search ring is entirely within an area consisting entirely of park sites and residential land use districts. **Refer to the Figure 6 – Search Ring in Section V of this report.**

   b. **Preferred Facility Design (LUC 20.20.195D.2.b):**
   The requirements for wireless communication facilities encourage co-locating facilities versus building new single-purpose monopoles. AT&T's proposal is consistent with this direction, since they have opted to co-locate on an existing PSE utility pole that has an existing, previously-approved WCF. The proposal represents the second most preferred system design alternative (co-located on utility poles, light standards, and signal supports) under LUC 20.20.195D.2.b.

   In addition, the applicant's radio frequency engineer has certified that the mechanical equipment is the minimum necessary to support operation of the facility. This certification letter can be found in the project file at the Record's Office in Bellevue City Hall.

   c. **Minimizing Adverse Impacts LUC 20.20.195D.2.c:**
   Application of the location and design hierarchies as described above, and the conditions found in Section VII of this report, will result in a proposal that minimizes the adverse impacts of the WCF when considering the search ring as a whole. In addition, the applicant has provided a letter from the RF engineer which states that the facility complies with RF Emission Guidelines set forth by the FCC. This certification letter can be found in the project file at the Record's Office in Bellevue City Hall.

3. **Dispersal Limits:** The applicant has verified that there are no other WCF's within 520 feet of this proposal in the public right of way.

4. **Development Standards:** The proposal includes the following development standards to ensure that the WCF minimizes the adverse impacts, especially visual and aesthetic impacts, on the property where the facility is located and in the vicinity of the facility.

   a. **Screening Techniques:**
   The new equipment required for the three new antennas will be located within an existing underground vault. The vault is adequately screened and no new landscaping/screening around the vault will be required. Any disturbance to existing vegetation must be restored. All coaxial cables, both existing and proposed, will be contained within a

shroud attached to the pole and the cabling shall be pulled tight to minimize visual impacts. The mechanical equipment will be connected to the pole via underground coaxial conduits. All antennas and mechanical units attached to the pole, either existing or proposed, will be painted brown to match the pole. **Refer to Conditions of Approval regarding shrub protection/site disturbance and restoration, antenna and equipment color and pole extension material and color, and cabling/shroud in Section VII of this report.**

b. **Design and configurations to minimize visual intrusion of the facility:**
The panel antennas and microwave antennas on the proposed pole extension will have slender, flat profiles and they will be flush-mounted to the pole such that no portion of the antenna extends above the height of the support pole and so that the antenna is within ***six-inches*** of the support structure. They will be painted dark brown to match the new pole as closely as possible to reduce the overall visual impact. In addition, the existing three antennas will be repainted with the same color so that all six antennas match each other exactly. **Refer to Condition of Approval regarding antenna mounting and antenna and equipment color in Section VII of this report.**

c. **Construction and site restoration techniques:**
There will be minor clearing to bury the underground coaxial conduits, connect to necessary utilities, and to install the equipment cabinet. All construction activities must adhere to the city's noise and construction hours codes and requirements. All areas of disturbance during construction will be restored and the applicant will provide an assurance device to ensure correct installation and plant establishment. The facility will not be activated until all work shown on the plans and specifications is completed.

The applicant will be required to obtain a right of way permit that will address traffic control and pedestrian impacts. Because the pathway to the north of the vault is a school route, the applicant will not be allowed to close this pathway without providing a temporary hard-surface pathway. **Refer to Condition of Approval regarding shrub protection/site disturbance and restoration, noise and construction hours, completion of work/facility activation, and the right of way use permit in Section VII of this report.**

d. **WCF Equipment:**
WCF equipment in residential districts is required to be screened to minimize the visual impact of the equipment on adjacent land uses. The proposal equipment will be located within the existing underground vault, which is adequately screened with mature vegetation. Any unintended disturbance of the existing vegetation will require full restoration. **Refer to Condition of Approval regarding site disturbance and restoration in Section VII of this report.**

e. **Co-location:**
This proposal is for co-location of three new antennas on the existing pole. Additional co-location on the pole for other carriers may be a possibility, subject to technical feasibility. However, specific details or analysis with regards to future co-location have not been included as part of this proposal.

5. **Radio Frequency Emissions:** The Engineering Certification Letter submitted by ClearWire's radio frequency engineer states that the facility will comply with the radio frequency emission standards adopted by the Federal Communications Commission (FCC). This certification letter can be found in the project file at the Record's Office in Bellevue City Hall.

6. **Setback Requirements for Freestanding Wireless Communication Facilities:** Setbacks requirements do not apply because the proposed antennas are on an existing PSE utility pole with an existing underground utility vault.

7. **Independent Technical Review:** No such review was deemed necessary for this application.

8. **Removal of Abandoned Antennas and Towers:**
Refer to Condition of Approval regarding abandoned sites in Section VII of this report.

9. **Removal Upon Under-grounding:**
Refer to Condition of Approval regarding removal of the facility upon undergrounding in Section VII of this report.

VI. Decision

After conducting the various administrative reviews associated with this proposal, including applicable land use consistency, SEPA, and City Code and Standard compliance reviews, the Director of the Development Services Department does hereby **APPROVE** the proposal subject to the following **CONDITIONS**:

VII. CONDITIONS OF APPROVAL:

The following conditions are imposed under authority referenced:

Compliance with Bellevue City Codes and Ordinances
The applicant shall comply with all applicable Bellevue City Codes, Standards, and Ordinances including but not limited to:

Applicable Codes, Standards & Ordinances	Contact Person
Clearing & Grading Code – BCC 23.76	Janney Gwo, (425) 452-6190
Construction Codes – BCC Title 23	Building Division, (425) 452-6864
Fire Code – BCC 23.11	Adrian Jones, (425) 452-6032
Land Use Code – BCC Title 20	Sally Nichols, (425) 452-2727
Noise Control – BCC 9.18	Sally Nichols, (425) 452-2727

Sign Code – BCC Title 22	Sally Nichols, (425) 452-2727
Right-of-Way Use Code 14.30	Dottie Schmidt, (425) 452-2888
Utility Code – BCC Title 24	Mark Frazier, (425) 452-2022

1. Noise & Construction Hours

The proposal will be subject to normal construction hours of 7 a.m. to 6 p.m., Monday through Friday and 9:00 a.m. to 6:00 p.m. on Saturdays, except for Federal holidays and as further defined by the Bellevue City Code. Proximity to existing residential uses will be given special consideration. Upon written request to the Development Services Department (DSD), work hours may be extended to 10:00 p.m. if the criteria for extension of work hours as stated in BCC 9.18 can be met and the appropriate mitigation employed.

The use of best available noise abatement technology consistent with feasibility is required during construction to mitigate construction noise impacts to surrounding uses.

REVIEWER: Sally Nichols, Land Use
AUTHORITY: BCC 9.18.020.C & 9.18.040

2. Shrub Protection/Site Disturbance and Restoration

During construction, the applicant is required to protect existing plant material, including all shrubs and groundcover around the existing equipment vault. The applicant shall fully restore with appropriate and approved groundcover, to the satisfaction of Land Use, any areas disturbed and or damaged during construction or future maintenance of either the WCF or its associated equipment. Prior to permit close out, the applicant shall contact the City of Bellevue Land Use reviewer to set up a Land Use Inspection on-site to review any required plant replacement. Contact Sally Nichols at (425) 452-2727, spnichols@bellevuewa.gov to arrange inspection.

REVIEWER: Sally Nichols, Land Use
AUTHORITY: LUC 20.20.195.D.4.c

3. Completion of Work/Facility Activation

The facility shall not be activated until all work included in the project scope and shown on the plans and specifications is completed.

REVIEWER: Sally Nichols, Land Use
AUTHORITY: LUC 20.40.425

4. Antenna Mounting

The antennas shall be attached to the replacement pole such that no portion of the antenna extends above the height of the new support structure (replacement pole) AND the inside face of the antennas shall be flush-mounted no greater than six inches from the face of the replacement pole.

REVIEWER: Sally Nichols, Land Use
AUTHORITY: LUC 20.20.195.B.1.a.v

5. Antenna and Equipment Color & Pole Extension Color and Material

a) **All** three proposed antennas and **all** associated equipment (including but not limited to the 3 TMA twin dual band AWS placed directly below the proposed antennas) mounted to the pole shall be painted dark brown to match the support structure (pole).

b) The three existing antennas and any existing equipment mounted to the pole shall be repainted the same color as the proposed antennas (dark brown) to ensure that all six antennas and all equipment has the same exact color.

c) The glu-lam pole extension shall be made of wood and painted to match the existing pole.

REVIEWER: Sally Nichols, Land Use
AUTHORITY: LUC 20.20.195.D.4.a

6. Cabling/Shroud

All cable connections to each antennas, either existing or proposed, shall be routed through a shroud attached to the pole. **The existing shroud shall be extended as high as feasible to better hide new and proposed cabling.**

Both existing and proposed cabling shall be **pulled tightly** to minimize visual impacts from the right-of-way and surrounding properties. **Note that the existing cabling is NOT pulled tight and this condition shall be remedied during construction of the proposed WCF proposal.**

REVIEWER: Sally Nichols, Land Use
AUTHORITY: LUC 20.20.195.B.1.a.iii

7. Right-of-Way Use Permit

Any use of the public right of way to accomplish the work required to add or upgrade facilities, will require a ROW Use Permit.

Traffic control plans must be submitted with the Right of Way Use permit materials for work at this site. Plans must show pedestrian system impacts and mitigations with the understanding that the pathway on the south side of the street is a school route and closure of this pathway will not be allowed during construction without a temporary hard-surface pathway provided. Short-term, flagged, pathway controls may be allowed during non-school transit periods.

The Site is currently under a Right of Way Lease. The Lease is covered under an Addendum to the Right of Way Use Agreement and was executed prior to issuance of the Right of Way permits for the construction of this site.

REVIEWER: Dottie Schmidt, Right-of-Way
AUTHORITY: BCC 14.30.070 and 14.30.080

8. Existing Radio System & Interference

If this telecommunications system causes interference problems with any of the existing radio systems for the City of Bellevue, this system will be required to immediately shut down until the interference can be removed or corrected.

REVIEWER: Adrian Jones, Fire Department
AUTHORITY: FCC 90.672

9. Removal of Abandoned Sites
The owner of this facility shall provide the Director with copies of any notice of intent to cease operations that is provided to the Federal Communications Commission (FCC). All WCFs and the associated equipment shall be removed by the facility owner within 90 days of the date it ceases to be operational, or if the facility falls into disrepair and is not maintained. Disrepair includes structural features, paint, or general lack of maintenance, which could result in safety or visual impacts.

REVIEWER: Sally Nichols, Land Use
AUTHORITY: LUC 20.20.195.D.8

10. Removal Upon Undergrounding:
The facility shall be removed at no expense to the City if co-located on an electrical system facility or utility support structure that is subsequently undergrounded.

REVIEWER: Sally Nichols, Land Use
AUTHORITY: LUC 20.20.195.D.9

Attachments

Project Plans
SEPA Checklist

LAKE HILLS PARK

SB1636

1200 164TH AVENUE SE
BELLEVUE, WA 98009

PROPRIETARY INFORMATION

THE INFORMATION CONTAINED IN THIS SET OF CONSTRUCTION DOCUMENTS IS PROPRIETARY BY NATURE. ANY USE OR DISCLOSURE OTHER THAN THAT WHICH RELATES TO CARRIER SERVICES IS STRICTLY PROHIBITED.

PROJECT INFORMATION

PROJECT DESCRIPTION:

AT&T PROPOSES TO MODIFY AN EXISTING UNOCCUPIED TELECOMMUNICATIONS FACILITY BY INSTALLING AN 8' EXTENSION TO AN EXISTING PSE UTILITY POLE AND THE ADDITION OF (3) NEW PANEL ANTENNAS. ALSO PROPOSED IS THE ADDITION OF (6) RRH UNITS, (1) LTE EQUIPMENT MODULE AND (1) FIBER ENCLOSURE MOUNTED INSIDE A PROPOSED CABINET IN THE EXISTING AT&T LEASE AREA

APPLICANT:

AT&T MOBILITY
RTC BUILDING 3
16221 NE 72ND WAY
REDMOND, WA 98052

PROPERTY OWNER:

CITY OF BELLEVUE
P.O. BOX 90012
BELLEVUE, WA 98009
CONTACT: RON KESSACK
PH: (206) 947-0335

SITE INFORMATION:

ZONING CLASSIFICATION: R-5
BUILDING CODE: 2009 IBC
CONSTRUCTION TYPE: N/A
OCCUPANCY: N/A
JURISDICTION: CITY OF BELLEVUE
CURRENT USE: TELECOMMUNICATIONS FACILITY
PROPOSED USE: TELECOMMUNICATIONS FACILITY

BUILDING CODE COMPLIANCE:

ALL WORK AND MATERIALS SHALL BE PERFORMED AND INSTALLED IN ACCORDANCE WITH THE CURRENT CONDITIONS OF THE FOLLOWING CODES AS ADOPTED BY THE LOCAL GOVERNING AUTHORITIES. NOTHING IN THESE PLANS IS TO BE CONSTRUED TO PERMIT WORK NOT CONFORMING TO THESE CODES:

WASHINGTON STATE AND LOCAL BUILDING CODES WITH THE FOLLOWING REFERENCE CODE:

- 2008 NATIONAL ELECTRIC CODE (NFPA 70)
- 2009 INTERNATIONAL BUILDING CODE (IBC)
- 2009 INTERNATIONAL MECHANICAL CODE (IMC)

SITE LOCATION:

LATITUDE: 47° 35' 53.1" N
LONGITUDE: 122° 07' 17.2" W
TOP OF STRUCTURE AGL: 62'-5"
BASE OF STRUCTURE AMSL: 298.00'

PARCEL NUMBER(S):

N/A (RIGHT-OF-WAY)
(ADJACENT TO 022405-9090)

GENERAL INFORMATION:

1. PARKING REQUIREMENTS ARE UNCHANGED.
2. TRAFFIC IS UNAFFECTED.

VICINITY MAP

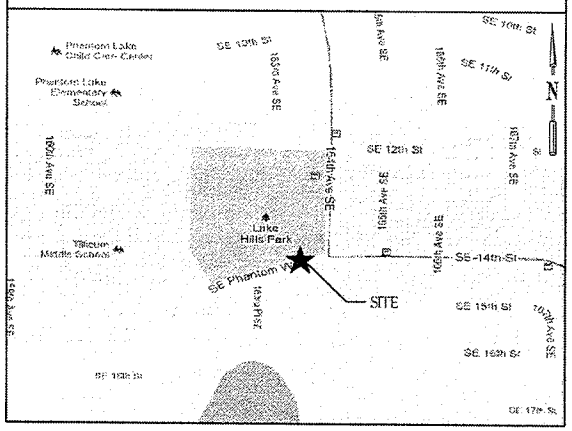

DRAWING INDEX

SHEET	DESCRIPTION	REV.
T-1	TITLE SHEET	0
G-1	GENERAL NOTES	0
G-2	GENERAL NOTES & SYMBOLS	0
C-1	SITE PLAN	0
A-1	COMPOUND PLAN	0
A-2	EXISTING & PROPOSED ELEVATIONS	0
A-3	CONSTRUCTION DETAILS	0
RF-1	ANTENNA CONFIGURATIONS	0
RF-2	RF EQUIPMENT DETAILS	0
E-1	SCHEMATIC GROUNDING PLAN	0
E-2	GROUNDING DETAILS	0

LEGAL DESCRIPTION

R.O.W. OF S.E. PHANTOM WAY, IN CITY OF BELLEVUE, IN KING COUNTY, WASHINGTON.

DRIVING DIRECTIONS

TURN RIGHT ON NE 73RD WAY. TURN LEFT ON 163RD PL NE. TURN LEFT ON NE 74TH ST. TURN RIGHT ON BEAR CREEK PKY. TURN RIGHT ON LEARY WAY NE. GO 0.28 MI. TAKE RAMP ONTO WA-520 W TOWARD SEATTLE. GO 2.4 MI. TAKE THE 148TH AVENUE NE EXIT. GO 0.25 MI. TURN LEFT ON 148TH AVENUE NE. GO 1.36 MI. TURN LEFT ON NE 8TH ST. GO 1 MI. TURN RIGHT ON 164TH AVENUE NE. GO 1.21 MI.

APPROVAL	DATE	SIGNATURE	APPROVAL	DATE	SIGNATURE
RF ENGINEER:			LANDLORD:		
RF MANAGER:			SITE ACQUISITION:		
OPPS MANAGER:			ZONING AGENT:		
CONSTR. MANAGER:			PROJECT MANAGER:		
NSB MANAGER:			CONSTR. MANAGER:		
TRANSPOR.:					
EQUIP. ENGINEER:					
COMPLIANCE:					

REVIEWERS SHALL CLEARLY PLACE INITIALS ADJACENT TO EACH REDLINE NOTE AS DRAWINGS ARE BEING REVIEWED

ABBREVIATIONS

A/C	AIR CONDITIONING	HORZ	HORIZONTAL	PLYWD	PLYWOOD
AGL	ABOVE GROUND LEVEL	HR	HOUR	PROJ	PROJECT
APPROX	APPROXIMATELY	HT	HEIGHT	PROP	PROPERTY
		HVAC	HEATING VENTILATION AIR CONDITIONING	PT	PRESSURE TREATED
BLDG	BUILDING			REQ	REQUIRED
BLK	BLOCKING			RM	ROOM
				SHT	SHEET
CLG	CEILING	ID	INSIDE DIAMETER	SIM	SIMILAR
CLR	CLEAR	IN	INCH	SPEC	SPECIFICATION
CONC	CONCRETE	INFO	INFORMATION	SF	SQUARE FOOT
CONST	CONSTRUCTION	INSUL	INSULATION	SS	STAINLESS STEEL
CONT	CONTINUOUS	INT	INTERIOR	STL	STEEL
		IBC	INTERNATIONAL BUILDING CODE	STRUCT	STRUCTURAL
DBL	DOUBLE			STD	STUD
DIA	DIAMETER			SUSP	SUSPENDED
DIAG	DIAGONAL				
DN	DOWN	LBS	POUNDS	THRU	THROUGH
DET	DETAIL	MAX	MAXIMUM	TNNG	TINNED
DWG	DRAWING	MECH	MECHANICAL	TYP	TYPICAL
		MTL	METAL		
		MFR	MANUFACTURE		
EA	EACH	MGR	MANAGER	UNO	UNLESS NOTED OTHERWISE
ELEV	ELEVATION	MIN	MINIMUM		
ELEC	ELECTRICAL	MISC	MISCELLANEOUS	VERT	VERTICAL
EQ	EQUAL	RO	ROUGH OPENING	VIF	VERIFY IN FIELD
EQUIP	EQUIPMENT				
EXT	EXTERIOR	NA	NOT APPLICABLE	W/	WITH
		NIC	NOT IN CONTRACT	W/O	WITHOUT
FIN	FINISH	NTS	NOT TO SCALE	WP	WATER PROOF
FLUOR	FLUORESCENT				
FLR	FLOOR	OC	ON CENTER		
FT	FOOT	OD	OUTSIDE DIAMETER		
GA	GAUGE				
GALV	GALVANIZED				
GC	GENERAL CONTRACTOR				
GRND	GROUND				
GYP BD	GYPSUM WALL BOARD				

PROJECT TEAM

PROJECT CONSULTANT-IMPLEMENTATION TEAM
WESTOWER COMMUNICATION INC.
7525 SE 24TH STREET
MERCER ISLAND, WA 98040
CONTACT: MIKE MCRITCHIE
PH: (425) 760-5835

SITE ACQUISITION
RYKA CONSULTING
918 S. HORTON ST.
SUITE 1002
SEATTLE, WA 98134
CONTACT: JESSICA PIERCE
PH: (206) 200-8333

PERMITTING AGENT
RYKA CONSULTING
918 S. HORTON ST.
SUITE 1002
SEATTLE, WA 98134
CONTACT: JOSH HAWES
PH: (206) 523-1941

PROJECT CONSULTANT-A&E
RICK MATTESON
MORRISON HERSHFIELD CORPORATION
10900 NE 8TH. STREET, SUITE 810
BELLEVUE, WA 98004
CONTACT: RICK MATTESON
PH: (425) 451-1301
RMATTESON@MORRISONHERSHFIELD.COM

THE INFORMATION CONTAINED IN THIS SET OF CONSTRUCTION DOCUMENTS IS PROPRIETARY BY NATURE. ANY USE OR DISCLOSURE OTHER THAN THAT WHICH RELATES TO CARRIER SERVICES IS STRICTLY PROHIBITED.

CLIENT:

IMPLEMENTATION TEAM:

SITE ACQUISITION & PERMITTING TEAM:

A&E TEAM:

MORRISON HERSHFIELD
10900 NE 8th, Suite 810,
Bellevue, WA 98004
Tel: 425.451.1301 Fax: 425.269.5958
www.morrisonhershfield.com

PROFESSIONAL CERTIFICATION:
8259
REGISTERED ARCHITECT
ROBERT JERRY LARA
STATE OF WASHINGTON
ROBERT JERRY LARA
STATE OF WASHINGTON
RA 8259

PROJECT:
LAKE HILLS PARK
SB1636
1200 164TH AVENUE SE
BELLEVUE, WA 98009

REVISIONS

NO.	DATE	DESCRIPTION	INITIAL
A	04/13/11	90% CLIENT REVIEW	KG
0	03/01/12	100% CLIENT REVIEW	KB

NOT FOR CONSTRUCTION UNLESS LABELED AS CONSTRUCTION SET

A/E PROJECT NO.:	8123047
DRAWN BY:	KB
REVIEWED BY:	RD

SHEET TITLE
TITLE SHEET

SHEET NUMBER
T-1

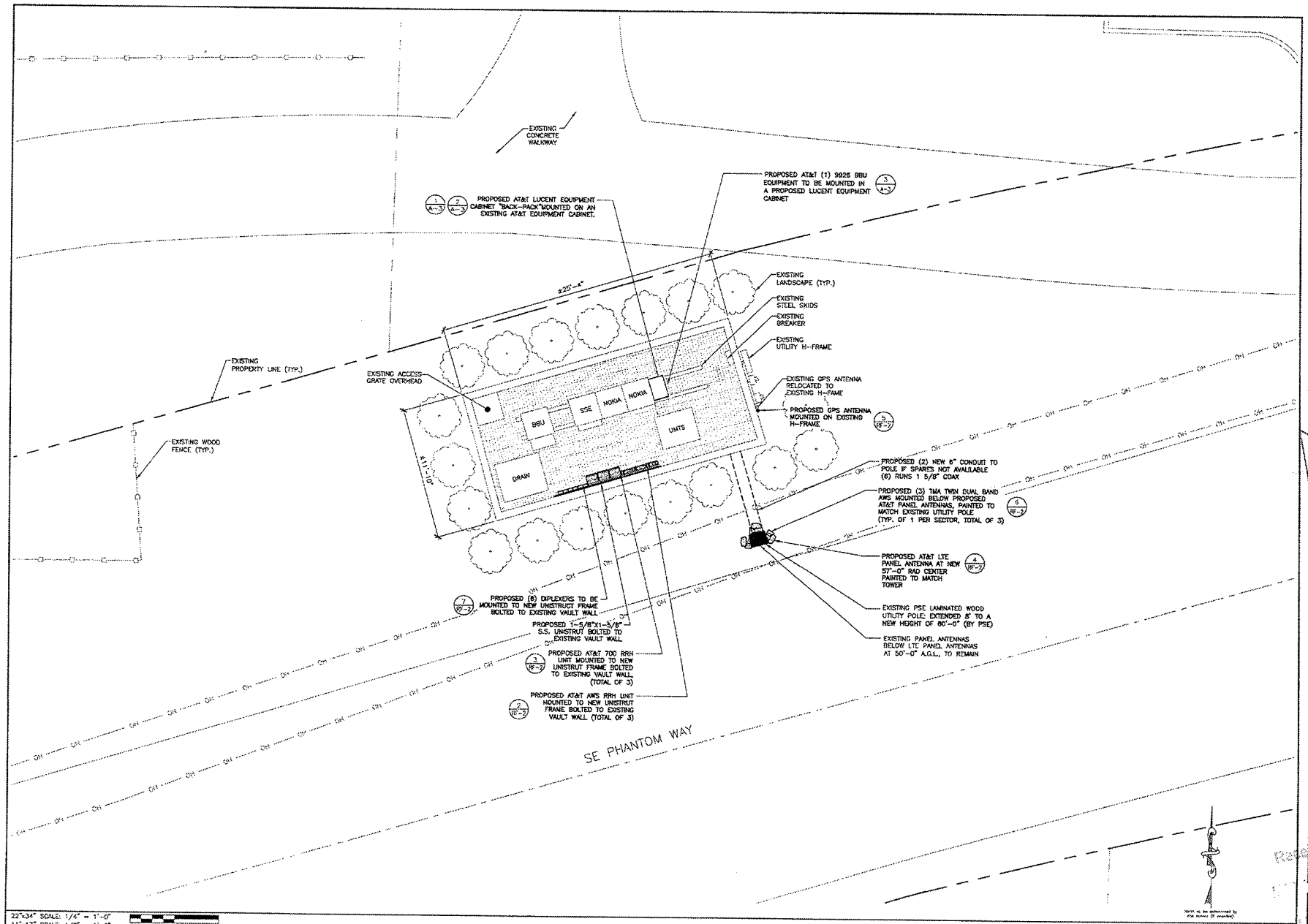

22"x34" SCALE: 1/4" = 1'-0"
11"x17" SCALE: 1/8" = 1'-0"

THE INFORMATION CONTAINED IN THIS SET OF CONSTRUCTION DOCUMENTS IS PROPRIETARY BY NATURE. ANY USE OR DISCLOSURE OTHER THAN THAT WHICH RELATES TO CARRIER SERVICES IS STRICTLY PROHIBITED.

COMPOUND PLAN

CLIENT:

at&t

IMPLEMENTATION TEAM:

WESTOWER COMMUNICATIONS

SITE ACQUISITION & PERMITTING TEAM:

RYKA

A&E TEAM:

MORRISON HERSHFIELD
10900 NE 8th, Suite 810,
Bellevue, WA 98004
Tel: 425.451.1301 Fax: 425.280.5958
www.morrisonhershfield.com

PROFESSIONAL CERTIFICATION:

8259
REGISTERED ARCHITECT
ROBERT JERRY LARA
STATE OF WASHINGTON

ROBERT JERRY LARA
STATE OF WASHINGTON
RA 8259

PROJECT:

LAKE HILLS PARK

SBI636

1200 164TH AVENUE SE
BELLEVUE, WA 98009

REVISIONS

NO.	DATE	DESCRIPTION	INITIAL
A	04/15/11	60% CLIENT REVIEW	JC
B	03/01/12	100% CLIENT REVIEW	KB

NOT FOR CONSTRUCTION UNLESS LABELED AS CONSTRUCTION SET

A/E PROJECT NO.:	8100200
DRAWN BY:	KB
REVIEWED BY:	MB

SHEET TITLE
COMPOUND PLAN

SHEET NUMBER
A-1

NOTES:
NO WORK SHALL COMMENCE WITHOUT THE APPROVED STRUCTURAL TOWER/ANTENNA ANALYSIS REPORT (SIGNED AND SEALED) PROVIDED BY OTHERS UNDER SEPARATE COVER. CONTRACTOR PRIOR TO CONSTRUCTION SHALL REVIEW THE APPROVED TOWER STRUCTURAL ANALYSIS SUPPLIED BY AT&T AND MODIFY, IF REQUIRED, ALL APPLICABLE MEMBERS AS INDICATED IN CERTIFIED STRUCTURAL REPORT PRIOR TO INSTALLATION OF ANTENNAS AND COAX CABLES.

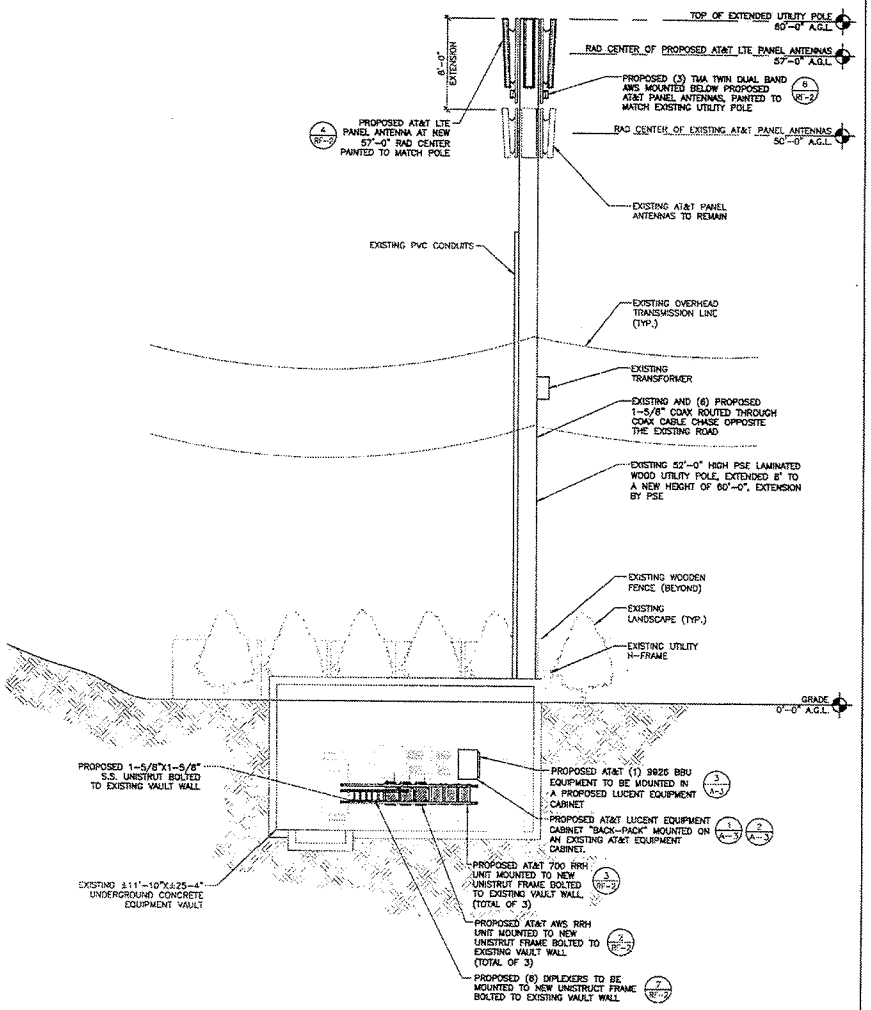

22"x34" SCALE: 3/16" = 1'-0"
11"x17" SCALE: 3/32" = 1'-0"

PROPOSED SOUTH ELEVATION 2

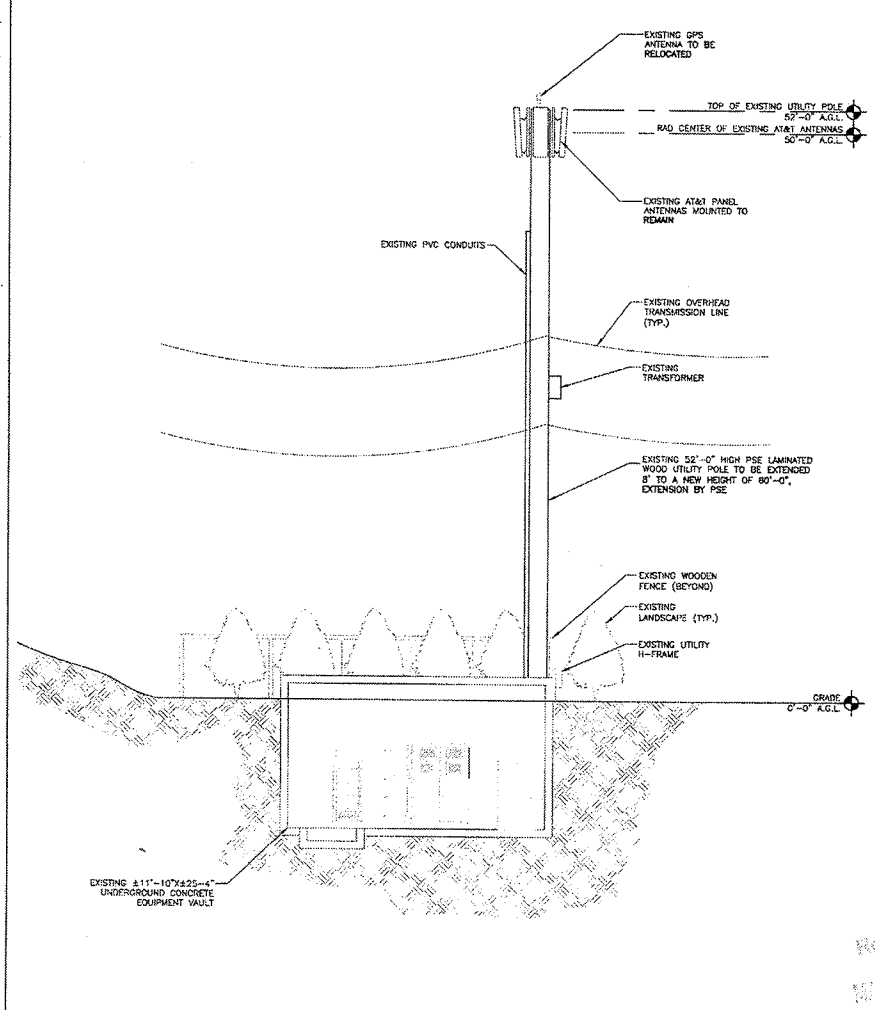

22"x34" SCALE: 3/16" = 1'-0"
11"x17" SCALE: 3/32" = 1'-0"

EXISTING SOUTH ELEVATION 1

THE INFORMATION CONTAINED IN THIS SET OF CONSTRUCTION DOCUMENTS IS PROPRIETARY BY NATURE. ANY USE OR DISCLOSURE OTHER THAN THAT WHICH RELATES TO CARRIER SERVICES IS STRICTLY PROHIBITED.

CLIENT:
at&t

IMPLEMENTATION TEAM:
WESTOWER COMMUNICATIONS

SITE ACQUISITION & PERMITTING TEAM:
RYKA CONSULTING

A/E TEAM
MORRISON HERSHFIELD
10900 NE 8th, Suite 810,
Bellevue, WA 98004
Tel: 425.451.1301 Fax: 425.289.5850
www.morrisonhershfield.com

PROFESSIONAL CERTIFICATION:
8259
REGISTERED ARCHITECT
ROBERT JERRY LARA
STATE OF WASHINGTON
ROBERT JERRY LARA
STATE OF WASHINGTON
RA 8259

PROJECT:
LAKE HILLS PARK
SB1636
1200 164TH AVENUE SE
BELLEVUE, WA 98009

REVISIONS

NO.	DATE	DESCRIPTION	INITIAL
A	04/18/11	90% CLIENT REVIEW	JG
0	03/01/12	100% CLIENT REVIEW	KB
-	-	-	-
-	-	-	-
-	-	-	-
-	-	-	-

NOT FOR CONSTRUCTION UNLESS LABELED AS CONSTRUCTION SET

A/E PROJECT NO.:	8100200
DRAWN BY:	KB
REVIEWED BY:	KB

SHEET TITLE
EXISTING & PROPOSED ELEVATIONS

SHEET NUMBER
A-2

NOT USED 6
22"x34" SCALE: NOT USED
11"x17" SCALE: NOT USED

NOT USED 5
22"x34" SCALE: NOT USED
11"x17" SCALE: NOT USED

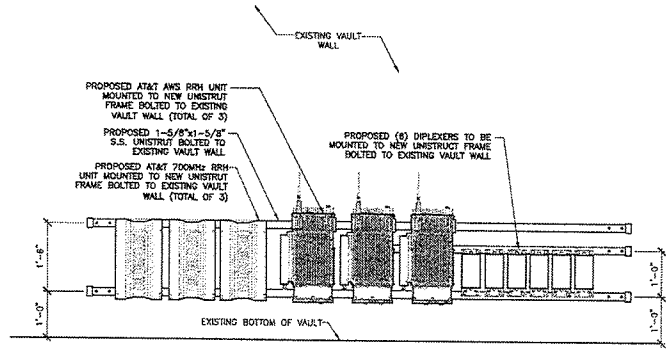

UNISTRUCT DETAILS 4
24"x36" SCALE: 3/4"=1'-0"
11"x17" SCALE: 1"=1/2"=1'-0"

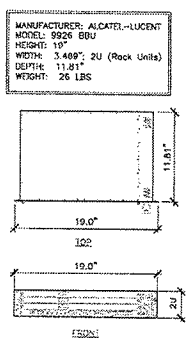

RACK MOUNTED BBU DETAIL 3
22"x34" SCALE: 1 1/2"=1'-0"
11"x17" SCALE: 3/4"=1'-0"

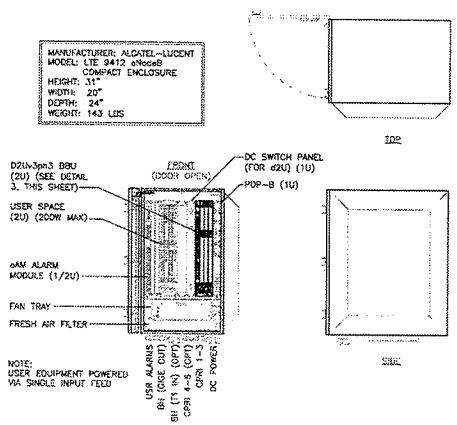

LUCENT EQUIPMENT CABINET SPECIFICATIONS 2
22"x34" SCALE: 1" = 1'-0"
11"x17" SCALE: 1/2" = 1'-0"

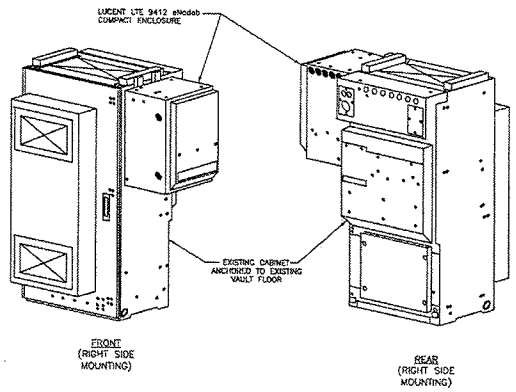

NOTE(S)

1. ONLY ONE 9412 CABINET CAN BE INSTALLED ON THE MODCELL SIDE, EITHER ON LEFT OR RIGHT, DEPENDING UPON THE LINE-UP AS THERE WILL BE OTHER CABINETS ON THE SIDE OF MODECELL.
2. SIDE OVERHANG OF LTE 9412 CABINET IS 21.4"

LUCENT CABINET "BACKPACK" MOUNTING DETAIL 1
22"x34" SCALE: 1/2"=1'-0"
11"x17" SCALE: 1/4"=1'-0"

THE INFORMATION CONTAINED IN THIS SET OF CONSTRUCTION DOCUMENTS IS PROPRIETARY BY NATURE. ANY USE OR DISCLOSURE OTHER THAN THAT WHICH RELATES TO CARRIER SERVICES IS STRICTLY PROHIBITED.

CLIENT:

at&t

IMPLEMENTATION TEAM:

WESTOWER COMMUNICATIONS

SITE ACQUISITION & PERMITTING TEAM:

RYKA

A/E TEAM:

MORRISON HERSHFIELD
10900 NE 8th, Suite 810,
Bellevue, WA 98004
Tel: 425.451.1301 Fax: 425.289.9958
www.morrisonhershfield.com

PROFESSIONAL CERTIFICATION:

8259 REGISTERED ARCHITECT
ROBERT JERRY LARA
STATE OF WASHINGTON

ROBERT JERRY LARA
STATE OF WASHINGTON
RA 8259

PROJECT:

LAKE HILLS PARK

SBI636

1200 164TH AVENUE SE
BELLEVUE, WA 98009

REVISIONS

NO.	DATE	DESCRIPTION	INITIAL
A	04/15/13	90% CLIENT REVIEW	KB
0	05/01/13	100% CLIENT REVIEW	KB

NOT FOR CONSTRUCTION UNLESS LABELED AS CONSTRUCTION SET

A/E PROJECT NO.:	610020.00
DRAWN BY:	KB
REVIEWED BY:	RB

SHEET TITLE
CONSTRUCTION DETAILS

SHEET NUMBER
A-3

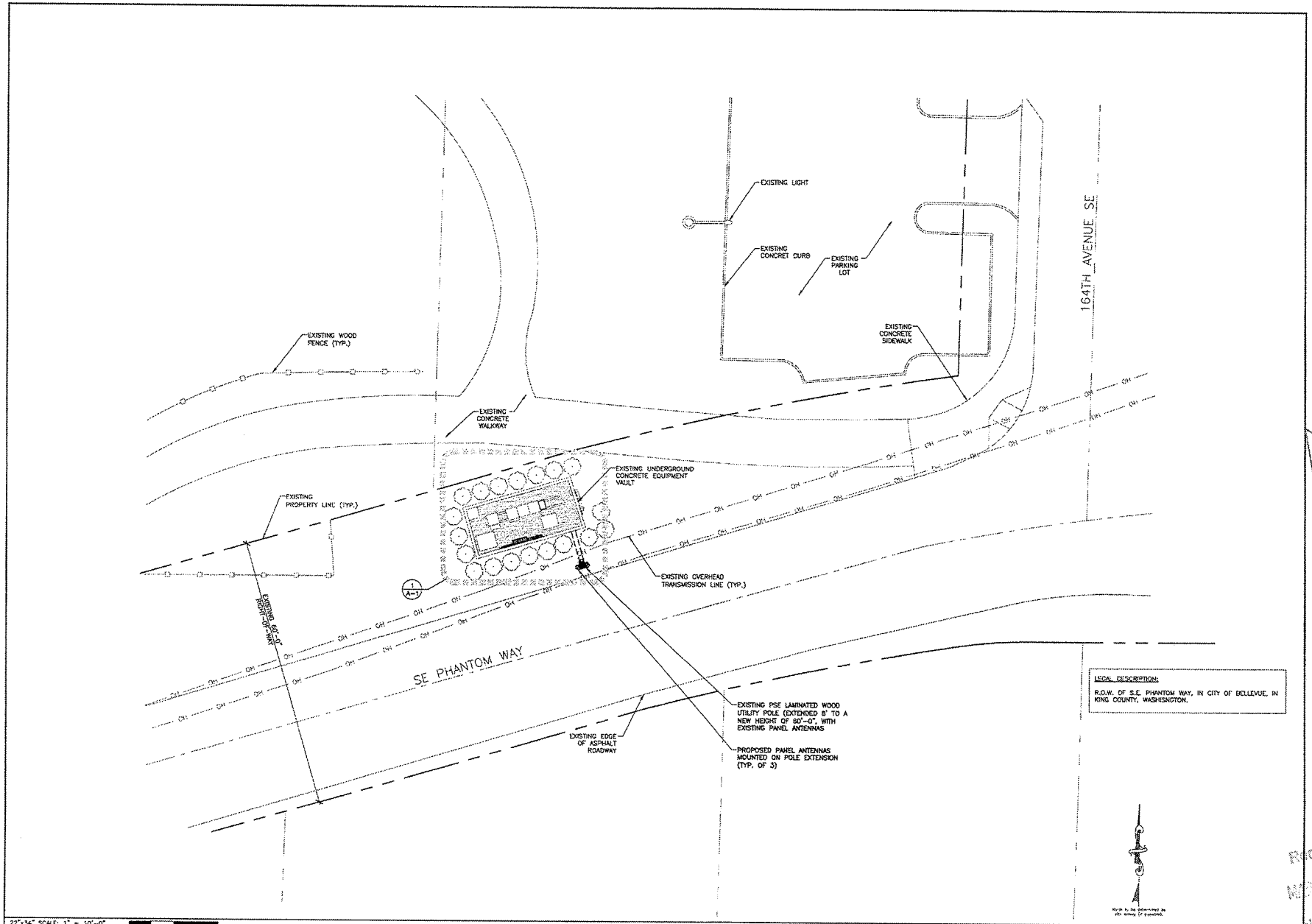

THE INFORMATION CONTAINED IN THIS SET OF CONSTRUCTION DOCUMENTS IS PROPRIETARY BY NATURE. ANY USE OR DISCLOSURE OTHER THAN THAT WHICH RELATES TO CARRIER SERVICES IS STRICTLY PROHIBITED.

CLIENT:

at&t

IMPLEMENTATION TEAM:

WESTOWER COMMUNICATIONS

SITE ACQUISITION & PERMITTING TEAM:

RYKA CONSULTING

A&E TEAM:

MORRISON HERSHFIELD
10900 NE 8th, Suite 810,
Bellevue, WA 98004
Tel: 425.451.1901 Fax: 425.289.5958
www.morrisonhershfield.com

PROFESSIONAL CERTIFICATION:

8259 REGISTERED ARCHITECT
ROBERT JERRY LARA
STATE OF WASHINGTON

ROBERT JERRY LARA
STATE OF WASHINGTON
RA 8259

PROJECT:

LAKE HILLS PARK

SBI636

1200 164TH AVENUE SE
BELLEVUE, WA 98009

REVISIONS

NO.	DATE	DESCRIPTION	INITIAL
A	04/10/19	90% CLIENT REVIEW	KC
0	05/01/19	100% CLIENT REVIEW	KB

NOT FOR CONSTRUCTION UNLESS LABELED AS CONSTRUCTION SET

A/E PROJECT NO.:	5100200
DRAWN BY:	KB
REVIEWED BY:	RR

SHEET TITLE
SITE PLAN

SHEET NUMBER
C-1

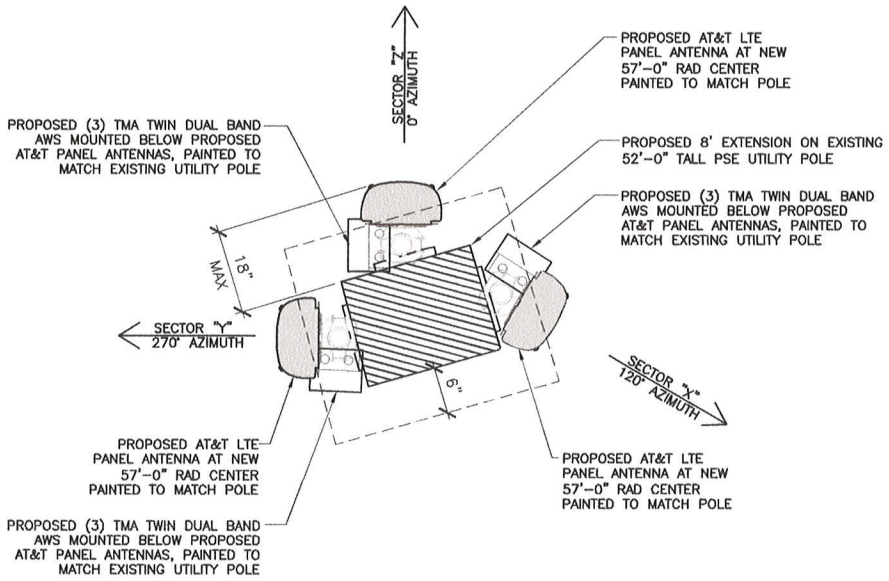

PROPOSED 57'-0" RAD CENTER

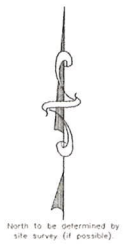

Received
APR 0 4 2012
Permit Processing

22"x34" SCALE: 1" = 1'-0"
11"x17" SCALE: 1/2" = 1'-0"
1' 6" 0" 1'

PROPOSED ANTENNA CONFIGURATION | 1

CLIENT:

at&t

IMPLEMENTATION TEAM:

WESTOWER COMMUNICATIONS

SITE ACQUISITION & PERMITTING TEAM:

RYKA CONSULTING

A&E TEAM:

MORRISON HERSHFIELD
10900 NE 8th, Suite 810,
Bellevue, WA 98004
Tel: 425.451.1301 Fax: 425.289.5958
www.morrisonhershfield.com

PROFESSIONAL CERTIFICATION:

PROJECT:

LAKE HILLS PARK
SB1636
1200 164TH AVENUE SE
BELLEVUE, WA 98009

REVISIONS

NO.	DATE	DESCRIPTION	INITIAL
A	04/03/12	DETAIL	RL

NOT FOR CONSTRUCTION UNLESS LABELED AS CONSTRUCTION SET

A/E PROJECT NO.:	8100200
DRAWN BY:	KB
REVIEWED BY:	RB

SHEET TITLE
ANTENNA DETAIL

SHEET NUMBER
D-1

PROPOSED ANTENNA CONFIGURATION AND SCHEDULE

SECTOR X	AZIMUTH	RADCENTER	NUMBER OF ANTENNAS	VENDOR	MODEL	ELEC. TILT	MECH. TILT	RET	TMA	NUMBER OF FEEDERS	FEEDER TYPE	FEEDER LENGTH	DIPLEXED
GSM 850	120°	50'-0"	1	ANDREW	QBXLH-6565A-R2M	4°	0°	YES	NONE	2	7/8"	80'-0"	YES (G8 G9)
GSM 1900		50'-0"				0°		YES	LGP 21403				
UMTS 850		50'-0"				0°		YES	NONE	2	7/8"	80'-0"	YES (U8 U9)
UMTS 1900		50'-0"				0°		YES	LGP 21401				
LTE 700	120°	57'-0"	1	KMW	AM-X-CD-16-65-00T-RET	6°	2°	YES	NONE	2	1-5/8"	80'-0"	NO
SECTOR Y	**AZIMUTH**	**RADCENTER**	**NUMBER OF ANTENNAS**	**VENDOR**	**MODEL**	**ELEC. TILT**	**MECH. TILT**	**RET**	**TMA**	**NUMBER OF FEEDERS**	**FEEDER TYPE**	**FEEDER LENGTH**	**DIPLEXED**
GSM 850	270°	50'-0"	1	ANDREW	QBXLH-6565A-R2M	0°	0°	YES	NONE	2	7/8"	80'-0"	YES (G8 G9)
GSM 1900		50'-0"				0°		YES	LGP 21403				
UMTS 850		50'-0"				3°		YES	NONE	2	7/8"	80'-0"	YES (U8 U9)
UMTS 1900		50'-0"				0°		YES	LGP 21401				
LTE 700	270°	57'-0"	1	KMW	AM-X-CD-16-65-00T-RET	9°	2°	YES	NONE	2	1-5/8"	80'-0"	NO
SECTOR Z	**AZIMUTH**	**RADCENTER**	**NUMBER OF ANTENNAS**	**VENDOR**	**MODEL**	**ELEC. TILT**	**MECH. TILT**	**RET**	**TMA**	**NUMBER OF FEEDERS**	**FEEDER TYPE**	**FEEDER LENGTH**	**DIPLEXED**
GSM 850	0°	50'-0"	1	ANDREW	QBXLH-6565A-R2M	0°	0°	YES	NONE	2	7/8"	80'-0"	YES (G8 G9)
GSM 1900		50'-0"				0°		YES	LGP 21403				
UMTS 850		50'-0"				3°		YES	NONE	2	7/8"	80'-0"	YES (U8 U9)
UMTS 1900		50'-0"				0°		YES	LGP 21401				
LTE 700	0°	57'-0"	1	KMW	AM-X-CD-16-65-00T-RET	2°	0°	YES	NONE	2	1-5/8"	80'-0"	NO

EXISTING COAX CONFIGURATION AND SCHEDULE

SECTOR X	AZIMUTH	RADCENTER	NUMBER OF ANTENNAS	VENDOR	MODEL	ELEC. TILT	MECH. TILT	RET	TMA	NUMBER OF FEEDERS	FEEDER TYPE	FEEDER LENGTH	DIPLEXED
GSM 850	120°	50'-0"	1	ANDREW	QBXLH-6565A-R2M	4°	0°	YES	NONE	2	7/8"	80'-0"	YES (G8 G9)
GSM 1900		50'-0"				0°		YES	LGP 21403				
UMTS 850		50'-0"				0°		YES	NONE	2	7/8"	80'-0"	YES (U8 U9)
UMTS 1900		50'-0"				0°		YES	LGP 21401				
SECTOR Y	**AZIMUTH**	**RADCENTER**	**NUMBER OF ANTENNAS**	**VENDOR**	**MODEL**	**ELEC. TILT**	**MECH. TILT**	**RET**	**TMA**	**NUMBER OF FEEDERS**	**FEEDER TYPE**	**FEEDER LENGTH**	**DIPLEXED**
GSM 850	270°	50'-0"	1	ANDREW	QBXLH-6565A-R2M	0°	0°	YES	NONE	2	7/8"	80'-0"	YES (G8 G9)
GSM 1900		50'-0"				0°		YES	LGP 21403				
UMTS 850		50'-0"				3°		YES	NONE	2	7/8"	80'-0"	YES (U8 U9)
UMTS 1900		50'-0"				0°		YES	LGP 21401				
SECTOR Z	**AZIMUTH**	**RADCENTER**	**NUMBER OF ANTENNAS**	**VENDOR**	**MODEL**	**ELEC. TILT**	**MECH. TILT**	**RET**	**TMA**	**NUMBER OF FEEDERS**	**FEEDER TYPE**	**FEEDER LENGTH**	**DIPLEXED**
GSM 850	0°	50'-0"	1	ANDREW	QBXLH-6565A-R2M	0°	0°	YES	NONE	2	7/8"	80'-0"	YES (G8 G9)
GSM 1900		50'-0"				0°		YES	LGP 21403				
UMTS 850		50'-0"				3°		YES	NONE	2	7/8"	80'-0"	YES (U8 U9)
UMTS 1900		50'-0"				0°		YES	LGP 21401				

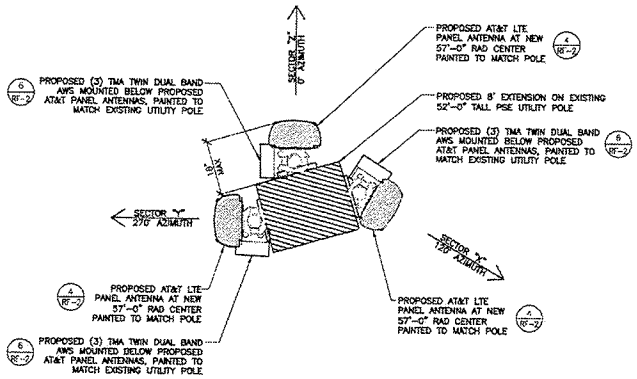

PROPOSED 57'-0" RAD CENTER

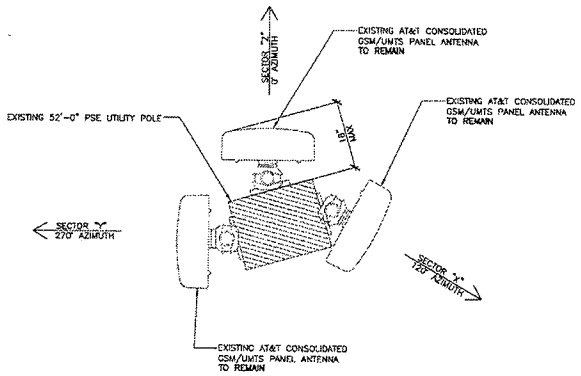

EXISTING 50'-0" RAD CENTER

22"x34" SCALE: 1" = 1'-0"
11"x17" SCALE: 1/2" = 1'-0"

PROPOSED ANTENNA CONFIGURATION | 2

22"x34" SCALE: 1" = 1'-0"
11"x17" SCALE: 1/2" = 1'-0"

EXISTING ANTENNA CONFIGURATION | 1

THE INFORMATION CONTAINED IN THIS SET OF CONSTRUCTION DOCUMENTS IS PROPRIETARY BY NATURE. ANY USE OR DISCLOSURE OTHER THAN THAT WHICH RELATES TO CARRIER SERVICES IS STRICTLY PROHIBITED.

CLIENT:

at&t

IMPLEMENTATION TEAM:

WESTOWER COMMUNICATIONS

SITE ACQUISITION & PERMITTING TEAM:

RYKA

A&E TEAM:

MORRISON HERSHFIELD
10900 NE 8th, Suite 810,
Bellevue, WA 98004
Tel: 425.451.1301 Fax: 425.289.5958
www.morrisonhershfield.com

PROFESSIONAL CERTIFICATION:

8259 REGISTERED ARCHITECT
ROBERT JERRY LARA
STATE OF WASHINGTON

ROBERT JERRY LARA
STATE OF WASHINGTON
RA 8259

PROJECT:

LAKE HILLS PARK

SB1636

1200 164TH AVENUE SE
BELLEVUE, WA 98009

REVISIONS

NO.	DATE	DESCRIPTION	INITIAL
A	04/15/11	90% CLIENT REVIEW	ID
0	03/01/12	100% CLIENT REVIEW	KB

NOT FOR CONSTRUCTION UNLESS LABELED AS CONSTRUCTION SET

A/E PROJECT NO.:	9109209
DRAWN BY:	KB
REVIEWED BY:	RD

SHEET TITLE
ANTENNA CONFIGURATIONS

SHEET NUMBER
RF-1

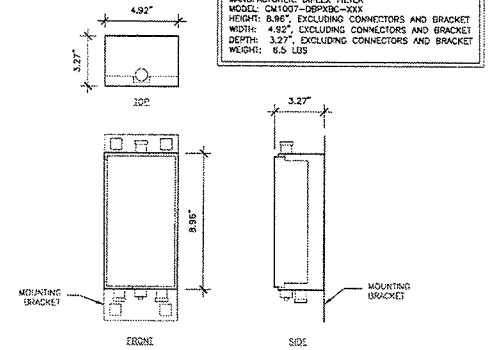

MANUFACTURER: DIPLEX FILTER
MODEL: CM1007-DBPXBC-XXX
HEIGHT: 9.96", EXCLUDING CONNECTORS AND BRACKET
WIDTH: 4.92", EXCLUDING CONNECTORS AND BRACKET
DEPTH: 3.27", EXCLUDING CONNECTORS AND BRACKET
WEIGHT: 6.5 LBS

DIPLEX FILTER DETAIL 7

22"x34" SCALE: 3"=1'-0"
11"x17" SCALE: 1-1/2"=1'-0"

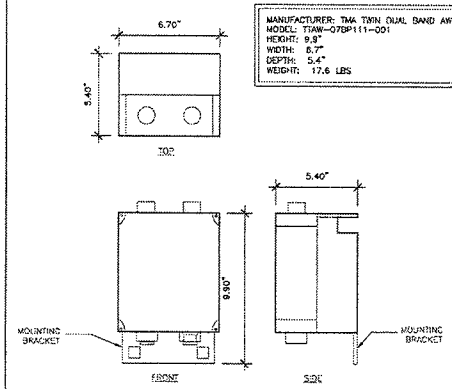

MANUFACTURER: TMA TWIN DUAL BAND AWS
MODEL: TIAW-07BP111-001
HEIGHT: 9.9"
WIDTH: 6.7"
DEPTH: 5.4"
WEIGHT: 17.6 LBS

TMA TWIN DUAL BAND AWS DETAIL 6

22"x34" SCALE: 3"=1'-0"
11"x17" SCALE: 1 1/2"=1'-0"

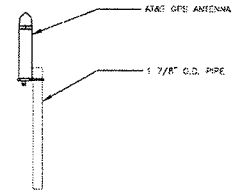

NOTES:

1. LOCATION OF ANTENNA MUST HAVE CLEAR VIEW OF SOUTHERN SKY AND CANNOT HAVE ANY BLOCKAGES EXCEEDING 25% OF THE SURFACE AREA OF A HEMISPHERE AROUND THE GPS ANTENNA.
2. ALL GPS ANTENNA LOCATIONS MUST BE ABLE TO RECEIVE CLEAR SIGNALS FROM A MINIMUM OF FOUR (4) SATELLITES. VERIFY WITH HANDHELD GPS BEFORE FINAL LOCATION OF GPS ANTENNA.

GPS MOUNTING DETAIL 5

22"x34" SCALE: 1"=1'-0"
11"x17" SCALE: 1/2"=1'-0"

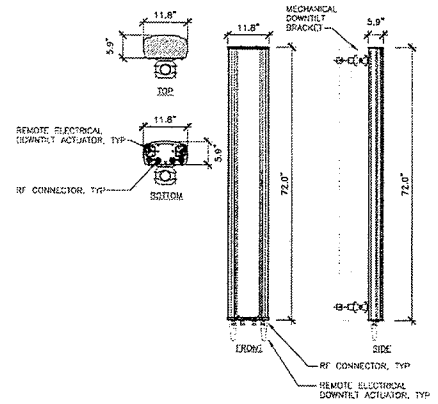

MANUFACTURER: KMW
MODEL: AM-X-CD-16-65-00T-RET
WEIGHT: 48.5 LBS
DIMENSIONS: 72" X 11.8" X 5.9"
FREQUENCY: REFER TO RF DATA SHEET

KMW ANTENNA SPECIFICATIONS 4

22"x34" SCALE: 3/4"=1'-0"
11"x17" SCALE: 3/8"=1'-0"

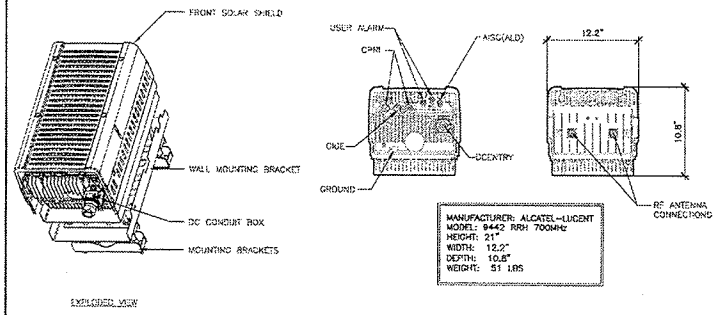

MANUFACTURER: ALCATEL-LUCENT
MODEL: 9442 RRH 700MHz
HEIGHT: 21"
WIDTH: 12.2"
DEPTH: 10.8"
WEIGHT: 51 LBS

RRH 700MHZ DETAIL 3

22"x34" SCALE: 1 1/2"=1'-0"
11"x17" SCALE: 3/4"=1'-0"

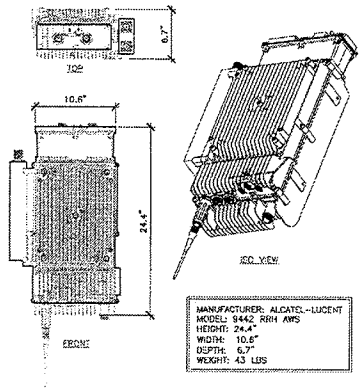

MANUFACTURER: ALCATEL-LUCENT
MODEL: 9442 RRH AWS
HEIGHT: 24.4"
WIDTH: 10.6"
DEPTH: 6.7"
WEIGHT: 43 LBS

RRH AWS DETAIL 2

22"x34" SCALE: 1 1/2"=1'-0"
11"x17" SCALE: 3/4"=1'-0"

NOT USED 1

22"x34" SCALE: NOT TO SCALE
11"x17" SCALE: NOT TO SCALE

THE INFORMATION CONTAINED IN THIS SET OF CONSTRUCTION DOCUMENTS IS PROPRIETARY BY NATURE. ANY USE OR DISCLOSURE OTHER THAN THAT WHICH RELATES TO CARRIER SERVICES IS STRICTLY PROHIBITED.

CLIENT:

at&t

IMPLEMENTATION TEAM:

WESTOWER COMMUNICATIONS

SITE ACQUISITION & PERMITTING TEAM:

RYKA CONSULTING

A&E TEAM:

MORRISON HERSHFIELD
10900 NE 8th, Suite 810,
Bellevue, WA 98004
Tel: 425.451.1301 Fax: 425.289.5858
www.morrisonhershfield.com

PROFESSIONAL CERTIFICATION:

3259
REGISTERED ARCHITECT
ROBERT JERRY LARA
STATE OF WASHINGTON

ROBERT JERRY LARA
STATE OF WASHINGTON
RA 3259

PROJECT:

LAKE HILLS PARK

SBI636

1200 164TH AVENUE SE
BELLEVUE, WA 98009

REVISIONS

NO.	DATE	DESCRIPTION	INITIAL
A	04/15/11	90% CLIENT REVIEW	KB
B	03/01/12	100% CLIENT REVIEW	KB

NOT FOR CONSTRUCTION UNLESS LABELED AS CONSTRUCTION SET

A/E PROJECT NO.:	2100/00
DRAWN BY:	KB
REVIEWED BY:	RJL

SHEET TITLE
RF EQUIPMENT DETAILS

SHEET NUMBER
RF-2

NOT USED 15
22"x34" SCALE: NOT TO SCALE
11"x17" SCALE: NOT TO SCALE

NOT USED 14
22"x34" SCALE: NOT TO SCALE
11"x17" SCALE: NOT TO SCALE

NOT USED 13
22"x34" SCALE: NOT TO SCALE
11"x17" SCALE: NOT TO SCALE

NOT USED 12
22"x34" SCALE: NOT TO SCALE
11"x17" SCALE: NOT TO SCALE

NOT USED 11
22"x34" SCALE: NOT TO SCALE
11"x17" SCALE: NOT TO SCALE

NOT USED 10
22"x34" SCALE: NOT TO SCALE
11"x17" SCALE: NOT TO SCALE

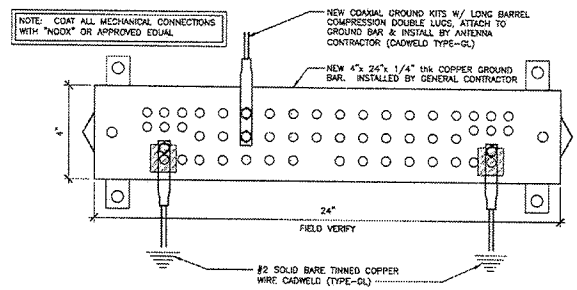

GROUND BAR 9
22"x34" SCALE: NOT TO SCALE
11"x17" SCALE: NOT TO SCALE

NOT USED 8
22"x34" SCALE: NOT TO SCALE
11"x17" SCALE: NOT TO SCALE

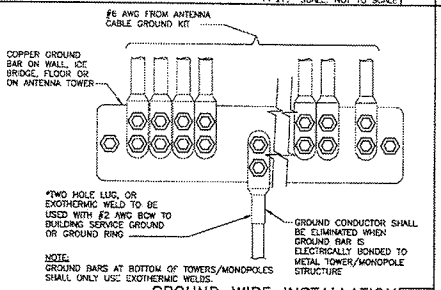

GROUND WIRE INSTALLATION 7
22"x34" SCALE: NOT TO SCALE
11"x17" SCALE: NOT TO SCALE

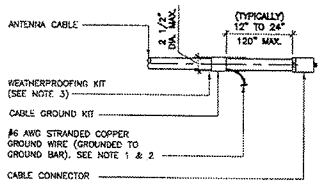

NOTES:
1. DO NOT INSTALL CABLE GROUND KIT AT A BEND AND ALWAYS DIRECT GROUND WIRE DOWN TO GROUND BAR.
2. GROUNDING KIT SHALL BE TYPE AND PART NUMBER AS SUPPLIED OR RECOMMENDED BY CABLE MANUFACTURER.
3 WEATHER PROOFING SHALL BE TWO--PART TAPE KIT, COLD SHRINK SHALL NOT BE USED.

CABLE GROUND KIT CONNECTION 6
22"x34" SCALE: NOT TO SCALE
11"x17" SCALE: NOT TO SCALE

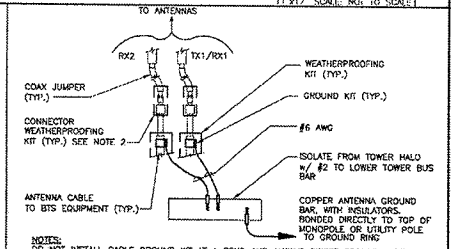

NOTES:
DO NOT INSTALL CABLE GROUND KIT AT A BEND AND ALWAYS DIRECT GROUND WIRE DOWN TO ANTENNA GROUND BAR.

WEATHER PROOFING SHALL BE TWO--PART TAPE KIT. COLD SHRINK SHALL NOT BE USED.

GROUND CABLE CONNECTION 5
22"x34" SCALE: NOT TO SCALE
11"x17" SCALE: NOT TO SCALE

NOT USED 4
22"x34" SCALE: NOT TO SCALE
11"x17" SCALE: NOT TO SCALE

NOT USED 3
22"x34" SCALE: NOT TO SCALE
11"x17" SCALE: NOT TO SCALE

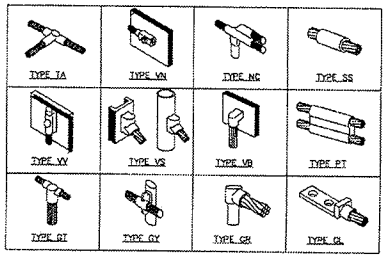

CADWELD GROUNDING CONNECTIONS 2
22"x34" SCALE: NOT TO SCALE
11"x17" SCALE: NOT TO SCALE

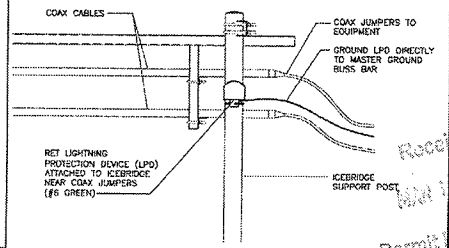

LPD GROUND PROTECTION DETAIL 1
22"x34" SCALE: 1" = 1'-0"
11"x17" SCALE: 1/2" = 1'-0"

THE INFORMATION CONTAINED IN THIS SET OF CONSTRUCTION DOCUMENTS IS PROPRIETARY BY NATURE. ANY USE OR DISCLOSURE OTHER THAN THAT WHICH RELATES TO CARRIER SERVICES IS STRICTLY PROHIBITED.

CLIENT:
at&t

IMPLEMENTATION TEAM:
WESTOWER COMMUNICATIONS

SITE ACQUISITION & PERMITTING TEAM:
RYKA CONSULTING

A&E TEAM:
MORRISON HERSHFIELD
10900 NE 8th, Suite 810,
Bellevue, WA 98004
Tel: 425.451.1301 Fax: 425.289.5958
www.morrisonhershfield.com

PROFESSIONAL CERTIFICATION:
8259
REGISTERED ARCHITECT
ROBERT JERRY LARA
STATE OF WASHINGTON
ROBERT JERRY LARA
STATE OF WASHINGTON
RA 8259

PROJECT:
LAKE HILLS PARK
SBI636
1200 164TH AVENUE SE
BELLEVUE, WA 98009

REVISIONS

NO.	DATE	DESCRIPTION	INITIAL
A	04/15/11	60% CLIENT REVIEW	KC
0	05/01/12	100% CLIENT REVIEW	KB

NOT FOR CONSTRUCTION UNLESS LABELED AS CONSTRUCTION SET

A/E PROJECT NO.:	8100200
DRAWN BY:	KB
REVIEWED BY:	MH

SHEET TITLE
GROUNDING DETAILS

SHEET NUMBER
E-2

Received
Permit Process

GENERAL NOTES:

1. THE CONTRACTOR SHALL NOTIFY TOWER NETWORK CARRIER OF ANY ERRORS, OMISSIONS, OR INCONSISTENCIES AS THEY MAY BE DISCOVERED IN PLANS, DOCUMENTS, NOTES, OR SPECIFICATIONS PRIOR TO STARTING CONSTRUCTION INCLUDING, BUT NOT LIMITED BY, DEMOLITION. THE CONTRACTOR SHALL BE RESPONSIBLE FOR CORRECTING ANY ERROR, OMISSION, OR INCONSISTENCY AFTER THE START OF CONSTRUCTION WHICH HAS NOT BEEN BROUGHT TO THE ATTENTION OF TOWER NETWORK CARRIER CONSTRUCTION PROJECT MANAGER AND SHALL INCUR ANY EXPENSES TO RECTIFY THE SITUATION. THE MEANS OF CORRECTING ANY ERROR SHALL FIRST BE APPROVED BY TOWER NETWORK CARRIER CONSTRUCTION PROJECT MANAGER.

2. PRIOR TO THE SUBMISSION OF BIDS, CONTRACTORS INVOLVED SHALL VISIT THE JOB SITE TO FAMILIARIZE THEMSELVES WITH ALL CONDITIONS AFFECTING THE PROPOSED PROJECT. CONTRACTORS PRIOR TO THE COMMENCEMENT OF CONSTRUCTION, THE CONTRACTOR HAVING BEEN AWARDED THIS PROJECT SHALL VISIT THE CONSTRUCTION SITE WITH THE CONSTRUCTION/CONTRACT DOCUMENTS TO VERIFY FIELD CONDITIONS AND CONFIRM THAT THE PROJECT WILL BE ACCOMPLISHED AS SHOWN. PRIOR TO PROCEEDING WITH CONSTRUCTION, ANY ERRORS, OMISSIONS, OR DISCREPANCIES SHALL BE BROUGHT TO THE ATTENTION OF THE ARCHITECT/ENGINEER VERBALLY AND IN WRITING.

3. FOR COLLOCATION SITES: CONTACT TOWER OWNER REPRESENTATIVE FOR PARTICIPATION IN BID WALK.

4. DRAWINGS ARE NOT TO BE SCALED, WRITTEN DIMENSIONS TAKE PRECEDENCE, THIS SET OF DOCUMENTS IS INTENDED TO BE USED FOR DIAGRAMMATIC PURPOSES ONLY, UNLESS NOTED OTHERWISE. THE GENERAL CONTRACTOR'S SCOPE OF WORK SHALL INCLUDE FURNISHING ALL MATERIALS, EQUIPMENT, LABOR, AND ANY REQUIREMENTS DEEMED NECESSARY TO COMPLETE PROJECT AS DESCRIBED IN THE DRAWINGS AND OWNER'S PROJECT MANUAL.

5. THE ARCHITECTS/ENGINEERS HAVE MADE EVERY EFFORT TO SET FORTH IN THE CONSTRUCTION AND CONTRACT DOCUMENTS THE COMPLETE SCOPE OF WORK. CONTRACTORS BIDDING THE JOB ARE NEVERTHELESS CAUTIONED THAT MINOR OMISSIONS OR ERRORS IN THE DRAWINGS AND OR SPECIFICATIONS SHALL NOT EXCUSE SAID CONTRACTOR FROM COMPLETING THE PROJECT AND IMPROVEMENTS IN ACCORDANCE WITH THE INTENT OF THESE DOCUMENTS. THE BIDDER SHALL BEAR THE RESPONSIBILITY OF NOTIFYING (IN WRITING) THE ARCHITECT/ENGINEER OF ANY CONFLICTS, ERRORS, OR OMISSIONS PRIOR TO SUBMISSION OF CONTRACTOR'S PROPOSAL. IN THE EVENT OF DISCREPANCIES THE CONTRACTOR SHALL PRICE THE MORE COSTLY OR EXTENSIVE WORK, UNLESS DIRECTED OTHERWISE.

6. DRAWINGS ARE NOT TO BE SCALED UNDER ANY CIRCUMSTANCE. TOWER NETWORK CARRIER IS NOT RESPONSIBLE FOR ANY ERRORS RESULTING FROM THIS PRACTICE WRITTEN DIMENSIONS TAKE PRECEDENCE OVER SCALE SHOWN ON PLANS.

7. OWNER, CONTRACTOR, AND TOWER NETWORK CARRIER CONSTRUCTION PROJECT MANAGER SHALL MEET JOINTLY TO VERIFY ALL DRAWINGS AND SPECIFICATIONS PRIOR TO THE START OF CONSTRUCTION.

8. THE GENERAL CONTRACTOR SHALL RECEIVE WRITTEN AUTHORIZATION TO PROCEED WITH CONSTRUCTION PRIOR TO STARTING WORK ON ANY ITEM NOT CLEARLY DEFINED BY THE CONSTRUCTION DRAWINGS/CONTRACT DOCUMENTS.

9. THE CONTRACTOR SHALL PERFORM WORK DURING OWNER'S PREFERRED HOURS TO AVOID DISTURBING NORMAL BUSINESS.

10. THE CONTRACTOR SHALL PROVIDE TOWER NETWORK CARRIER PROPER INSURANCE CERTIFICATES NAMING TOWER NETWORK CARRIER AS ADDITIONAL INSURED, AND TOWER NETWORK CARRIER PROOF OF LICENSE(S) AND PE & PD INSURANCE.

11. THE CONTRACTOR SHALL SUPERVISE AND DIRECT THE PROJECT DESCRIBED IN THE CONTRACT DOCUMENTS. THE CONTRACTOR SHALL BE SOLELY RESPONSIBLE FOR ALL CONSTRUCTION MEANS, METHODS, TECHNIQUES, SEQUENCES, AND PROCEDURES FOR COORDINATING ALL PORTIONS OF THE WORK UNDER THE CONTRACT.

12. THE CONTRACTOR SHALL INSTALL ALL EQUIPMENT AND MATERIALS ACCORDING TO MANUFACTURER'S/VENDOR'S SPECIFICATIONS UNLESS NOTED OTHERWISE OR WHERE LOCAL CODES OR ORDINANCES TAKE PRECEDENCE.

13. ALL WORK PERFORMED ON THE PROJECT AND MATERIALS INSTALLED SHALL BE IN STRICT ACCORDANCE WITH ALL APPLICABLE CODES, REGULATIONS, AND ORDINANCES. CONTRACTOR SHALL GIVE ALL NOTICES AND COMPLY WITH ALL LAWS, ORDINANCES, RULES, REGULATIONS AND LAWFUL ORDERS OF ANY PUBLIC AUTHORITY, MUNICIPAL AND UTILITY COMPANY SPECIFICATIONS, AND LOCAL AND STATE JURISDICTIONAL CODES BEARING ON THE PERFORMANCE OF THE WORK.

14. GENERAL CONTRACTOR SHALL PROVIDE, AT THE PROJECT SITE, A FULL SET OF CONSTRUCTION DOCUMENTS UPDATED WITH THE LATEST REVISIONS AND ADDENDA OR CLARIFICATIONS FOR USE BY ALL PERSONNEL INVOLVED WITH THE PROJECT. THIS SET IS A VALID CONTRACT DOCUMENT ONLY IF THE TITLE SHEET IS STAMPED "FOR CONSTRUCTION" AND EACH SUCCESSIVE SHEET BEARS THE ARCHITECT'S SIGNED WET STAMP.

15. A COPY OF GOVERNING AGENCY APPROVED PLANS SHALL BE KEPT IN A PLACE SPECIFIED BY THE GOVERNING AGENCY, AND BY LAW, SHALL BE AVAILABLE FOR INSPECTION AT ALL TIMES. THE PLANS ARE NOT TO BE USED BY THE WORKMEN. ALL CONSTRUCTION SETS SHALL REFLECT THE SAME INFORMATION AS GOVERNING AGENCY APPROVED PLANS. THE CONTRACTOR SHALL ALSO MAINTAIN ONE SET OF PLANS, IN GOOD CONDITION, COMPLETE WITH ALL REVISIONS, ADDENDA AND CHANGE ORDERS ON THE PREMISES AT ALL TIMES UNDER THE DIRECT CARE OF THE SUPERINTENDENT. THE CONTRACTOR SHALL SUPPLY TOWER NETWORK CARRIER CONSTRUCTION PROJECT MANAGER WITH A COPY OF ALL REVISIONS, ADDENDA, AND/OR CHANGE ORDERS AT THE CONCLUSION OF THE WORK AS A PART OF THE AS-BUILT DRAWING RECORDS.

16. THE STRUCTURAL COMPONENTS OF ADJACENT CONSTRUCTION OR FACILITIES ARE NOT TO BE ALTERED BY THIS CONSTRUCTION PROJECT UNLESS NOTED OTHERWISE.

17. THE CONTRACTOR SHALL STUDY THE STRUCTURAL, ELECTRICAL, MECHANICAL, AND PLUMBING PLANS AND CROSS CHECK THEIR DETAILS, NOTES, DIMENSIONS, AND ALL REQUIREMENTS PRIOR TO THE START OF ANY WORK.

18. THE CONTRACTOR SHALL BE RESPONSIBLE FOR THE COMPLETE SECURITY OF THE PROJECT AND SITE WHILE THE WORK IS IN PROGRESS UNTIL THE JOB IS COMPLETE.

19. THE CONTRACTOR HAS THE RESPONSIBILITY OF LOCATING ALL EXISTING UTILITIES WHETHER OR NOT SHOWN ON THE PLANS, AND TO PROTECT THEM FROM DAMAGE. THE CONTRACTOR, OR SUBCONTRACTOR AS SPECIFIED IN THE AGREEMENT BETWEEN SUBCONTRACTOR AND CONTRACTOR, SHALL BEAR THE EXPENSES OF REPAIR AND/OR REPLACEMENT OF UTILITIES OR OTHER PROPERTY DAMAGE BY OPERATIONS IN CONJUNCTION WITH THE EXECUTION OF THE WORK.

20. THE REFERENCES ON THE DRAWINGS ARE FOR CONVENIENCE ONLY AND SHALL NOT LIMIT THE APPLICATION OF ANY DRAWING OR DETAIL.

21. ALL DIMENSIONS ON THE PLANS ARE TO FACE OF STUD (F.O.S.) UNLESS NOTED OTHERWISE (U.N.O.).

22. ALL EXISTING CONSTRUCTION, EQUIPMENT, AND FINISHES NOTED TO BE REMOVED SHALL BECOME THE PROPERTY OF THE CONTRACTOR AND WILL BE REMOVED FROM THE SITE WITH THE FOLLOWING EXCEPTIONS:
    A. PROPERTY NOTED TO BE RETURNED TO THE OWNER.
    B. PROPERTY NOTED TO BE REMOVED BY THE OWNER.

23. THE GOVERNING AGENCIES, CODE AUTHORITIES, AND BUILDING INSPECTORS SHALL PROVIDE THE MINIMUM STANDARDS FOR CONSTRUCTION TECHNIQUES, MATERIALS, AND FINISHES USED THROUGHOUT THE PROJECT. TRADE STANDARDS AND/OR PUBLISHED MANUFACTURERS SPECIFICATIONS MEETING OR EXCEEDING DESIGN REQUIREMENTS SHALL BE USED FOR INSTALLATION.

24. WHEN REQUIRED STORAGE OF MATERIALS OCCURS, THEY SHALL BE EVENLY DISTRIBUTED OVER ROUGH FRAMED FLOORS OR ROOFS SO AS NOT TO EXCEED THE DESIGNED LIVE LOADS FOR THE STRUCTURE. TEMPORARY SHORING AND/OR BRACING IS TO BE PROVIDED WHERE THE STRUCTURE HAS NOT ATTAINED THE DESIGN STRENGTH FOR THE CONDITIONS PRESENT.

25. PRIOR TO THE POURING OF ANY NEW SLAB OVER AN EXISTING SLAB THE CONTRACTOR SHALL VERIFY LOCATIONS OF ALL OPENINGS, CHASES, AND EQUIPMENT WHICH ARE TO BE IMPLEMENTED INTO THE NEW WORK. ALL ITEMS DESIGNATED TO BE ABANDONED SHALL BE NOTED AND DISCUSSED WITH THE OWNER AND TOWER NETWORK CARRIER CONSTRUCTION PROJECT MANAGER AS PART OF THE AS-BUILT DRAWING PACKAGE.

26. SEAL ALL PENETRATIONS THROUGH FIRE-RATED AREAS WITH U.L. LISTED OR FIRE MARSHALL APPROVED MATERIALS IF APPLICABLE TO THIS FACILITY AND OR PROJECT SITE.

27. BUILDING INSPECTORS AND/OR OTHER BUILDING OFFICIALS ARE TO BE NOTIFIED PRIOR TO ANY GRADING, CONSTRUCTION, AND ANY OTHER PROJECT EFFORT AS MANDATED BY THE GOVERNING AGENCY.

28. CONTRACTOR TO PROVIDE A PORTABLE FIRE EXTINGUISHER WITH A RATING OF NOT LESS THAN 2-A OR 2-A10BC WITHIN 75 FEET TRAVEL DISTANCE TO ALL PORTIONS OF PROJECT AREA DURING CONSTRUCTION.

29. THE PROJECT, WHEN COMPLETED, SHALL COMPLY WITH LOCAL SECURITY CODES AND TITLE-24 ENERGY CONSERVATION REQUIREMENTS. (TITLE-24 WHEN APPLICABLE)

30. ALL GLASS AND GLAZING IS TO COMPLY WITH CHAPTER 54 OF THE U.S. CONSUMER SAFETY COMMISSION - SAFETY STANDARDS FOR ARCHITECTURAL GLAZING MATERIALS (42 FR 1428, CFR PART 1201) AND LOCAL SECURITY REQUIREMENTS.

31. CONTRACTOR SHALL MAKE NECESSARY PROVISIONS TO PROTECT EXISTING IMPROVEMENTS, EASEMENTS, PAVING, CURBING, ETC. DURING CONSTRUCTION. UPON COMPLETION OF WORK, CONTRACTOR SHALL REPAIR ANY DAMAGE THAT MAY HAVE OCCURRED DUE TO CONSTRUCTION ON OR ABOUT THE PROPERTY.

32. CONTRACTOR SHALL KEEP GENERAL WORK AREA CLEAN AND HAZARD FREE DURING CONSTRUCTION AND DISPOSE OF ALL DIRT, DEBRIS, AND RUBBISH. CONTRACTOR SHALL REMOVE EQUIPMENT NOT SPECIFIED AS REMAINING ON THE PROPERTY OR PREMISES. SITE SHALL BE LEFT IN CLEAN CONDITION AND FREE FROM PAINT SPOTS, DUST, OR SMUDGES OF ANY NATURE.

33. NEW CONSTRUCTION ADDED TO EXISTING CONSTRUCTION SHALL MATCH IN FORM, TEXTURE, FINISH, AND IN MATERIALS EXCEPT AS NOTED IN THE PLANS AND SPECIFICATIONS.

34. THE CONTRACTOR SHALL PROVIDE ALL NECESSARY BACKING, BLOCKING, AND/OR SLEEVES REQUIRED FOR THE INSTALLATION OF FIXTURES, MECHANICAL EQUIPMENT, PLUMBING, HARDWARE, AND FINISH ITEMS TO INSURE A PROPER AND COMPLETE JOB.

35. THE CONTRACTOR IS RESPONSIBLE FOR PROVIDING A PROJECT LEVEL, STRAIGHT, AND TRUE ACCORDING TO THE PLANS. THE CONTRACTOR SHALL COMPARE THE LINES AND LEVELS OF THE EXISTING CONDITIONS WITH THOSE SHOWN ON THE PLANS PRIOR TO THE START OF ANY CONSTRUCTION. TOWER NETWORK CARRIER SHALL BE NOTIFIED OF ANY ERRORS, OMISSIONS, OR INCONSISTENCIES PRIOR TO ANY CONSTRUCTION.

36. THE CONTRACTOR IS TO PROVIDE PROTECTION FOR ADJOINING PROPERTIES FROM PHYSICAL HARM, NOISE, DUST, DIRT, AND FIRE AS REQUIRED BY THE GOVERNING AGENCIES.

37. WHERE SPECIFIED, MATERIALS TESTING SHALL BE TO THE LATEST STANDARDS AND/OR REVISIONS AVAILABLE AS REQUIRED BY THE GOVERNING AGENCY RESPONSIBLE FOR RECORDING THE RESULTS.

38. THE CONTRACTOR IS RESPONSIBLE FOR THE STORAGE OF ALL MATERIALS AND SHALL NOT DO SO ON PUBLIC PROPERTY WITHOUT A PERMIT TO DO SO FROM THE GOVERNING AGENCIES FOR THIS PURPOSE.

39. GENERAL NOTES AND STANDARD DETAILS ARE THE MINIMUM REQUIREMENTS TO BE USED IN CONDITIONS WHICH ARE NOT SPECIFICALLY SHOWN OTHERWISE.

40. TRADES INVOLVED IN THE PROJECT SHALL BE RESPONSIBLE FOR THEIR OWN CUTTING, FITTING, PATCHING, ETC., SO AS TO BE RECEIVED PROPERLY BY THE WORK OF OTHER TRADES.

41. ALL DEBRIS AND REFUSE IS TO BE REMOVED FROM THE PROJECT PREMISES AND SHALL BE LEFT IN A CLEAN (BROOM FINISH) CONDITION AT ALL TIMES BY EACH TRADE AS THEY PERFORM THEIR OWN PORTION OF THE WORK.

42. TOWER NETWORK CARRIER DOES NOT GUARANTEE ANY PRODUCTS, FIXTURES, AND/OR ANY EQUIPMENT NAMED BY A TRADE OR MANUFACTURER. GUARANTEE OR WARRANTY THAT MAY BE IN EFFECT IS DONE SO THROUGH THE COMPANY OR MANUFACTURER PROVIDING THE PRODUCT, FIXTURE, AND/OR EQUIPMENT ONLY. UNLESS SPECIFIC RESPONSIBILITY IS ALSO PROVIDED BY THE CONTRACTOR/SUBCONTRACTOR IN WRITTEN FORM.

43. CAUTION! CALL BEFORE YOU DIG! BURIED UTILITIES EXIST IN THE AREA AND UTILITY INFORMATION SHOWN MAY NOT BE COMPLETE. CONTACT THE ONE-CALL UTILITY LOCATE SERVICE A MINIMUM OF 48 HOURS PRIOR TO CONSTRUCTION. 1-800-424-5555.

44. CONTRACTOR TO REPLACE AND/OR REROUTE ANY EXISTING UNDERGROUND UTILITIES ENCOUNTERED DURING TRENCHING AND GENERAL CONSTRUCTION.

45. CONTRACTOR TO LOCATE ALL UTILITIES PRIOR TO PLACEMENT OF MONOPOLE FOOTING AND OTHER STRUCTURES TO BE PLACED IN GROUND. SEE GENERAL NOTE #6 ON THIS SHEET.

46. SEE CIVIL DRAWINGS FOR ADDITIONAL SITE INFORMATION.

47. CONTRACTOR TO DOCUMENT ALL WORK PERFORMED WITH PHOTOGRAPHS AND SUBMIT TO TOWER NETWORK CARRIER ALONG WITH REDLINED CONSTRUCTION SET.

48. CONTRACTOR TO DOCUMENT ALL CHANGES MADE IN THE FIELD BY MARKING UP (REDLINING) THE APPROVED CONSTRUCTION SET AND SUBMITTING THE REDLINED SET TO TOWER NETWORK CARRIER UPON COMPLETION.

49. GENERAL CONTRACTOR IS TO COORDINATE ALL POWER INSTALLATION WITH POWER COMPANY AS REQUIRED. CONTRACTOR TO REPORT POWER INSTALLATION COORDINATION SOLUTION(S) TO NETWORK CARRIER REPRESENTATIVE, PROJECT CONSTRUCTION MANAGER AND ARCHITECT.

50. ANY SUBSTITUTIONS OF MATERIALS AND/OR EQUIPMENT, MUST BE APPROVED BY TOWER NETWORK CARRIER CONSTRUCTION MANAGER.

51. THE GENERAL CONTRACTOR SHALL BE RESPONSIBLE FOR AND SHALL REMEDY ALL FAULTY, INFERIOR, AND/OR IMPROPER MATERIALS, DAMAGED GOODS, AND/OR FAULTY WORKMANSHIP FOR ONE (1) YEAR AFTER THE PROJECT IS COMPLETE AND ACCEPTED UNDER THIS CONTRACT; UNLESS NOTED OTHERWISE IN THE CONTRACT BETWEEN THE OWNER AND THE CONTRACTOR. (EXCEPTION) THE ROOFING SUBCONTRACTOR SHALL FURNISH A MAINTENANCE AGREEMENT FOR ALL WORK DONE, COSIGNED BY THE GENERAL CONTRACTOR, TO MAINTAIN THE ROOFING IN A WATERTIGHT CONDITION FOR A PERIOD OF TWO (2) YEARS STARTING AFTER THE DATE OF SUBSTANTIAL COMPLETION OF THE PROJECT. UNLESS OTHERWISE WRITTEN IN THE CONTRACT BETWEEN THE OWNER AND THE CONTRACTOR.

52. THE CONTRACTOR SHALL PROVIDE ADEQUATE PROTECTION FOR THE SAFETY OF THE OWNER'S EMPLOYEES, WORKMEN, AND ALL TIMES DURING THE CONSTRUCTION OF THE PROJECT.

53. THE CONTRACTOR SHALL BE REQUIRED TO PAY FOR ALL NECESSARY PERMITS AND/OR FEES WITH RESPECT TO THE WORK TO COMPLETE THE PROJECT. BUILDING PERMIT APPLICATIONS SHALL BE FILED BY THE OWNER OR HIS REPRESENTATIVE. CONTRACTOR SHALL OBTAIN PERMIT AND MAKE FINAL PAYMENT FOR SAID DOCUMENT.

54. THE ARCHITECT/ENGINEER IN CHARGE SHALL SIGN AND SEAL ALL DRAWINGS AND/OR SPECIFICATIONS.

55. TOWER NETWORK CARRIER WILL REVIEW AND APPROVE SHOP DRAWINGS AND SAMPLES FOR CONFORMANCE WITH DESIGN CONCEPT. TOWER NETWORK CARRIER PROJECT APPROVAL OF A SEPARATE ITEM SHALL NOT INCLUDE APPROVAL OF AN ASSEMBLY IN WHICH THE ITEM FUNCTIONS.

56. ALL ANTENNAS MOUNTED ON ROOF SUPPORT FRAMES TO BE PROVIDED BY TOWER NETWORK CARRIER COMMUNICATIONS.

57. CONTRACTOR TO PROVIDE TRENCH AS REQUIRED TO INSTALL BOTH ELECTRICAL AND TELEPHONE UNDERGROUND CONDUITS (#40 PVC) PER S.C.E. WORKORDER. BACKFILL WITH CLEAN SAND AND COMPACT TO THE SATISFACTION OF THE DISTRICTS INSPECTOR. REPLACE FINISH GRADE WITH MATCHING MATERIALS (GRASS, ASPHALT, CONCRETE, ETC.)

58. CONTRACTOR TO PROVIDE HEAVY STEEL PLATES AT OPEN TRENCHES FOR SAFETY AND TO PROTECT EXISTING GROUND SURFACES FROM HEAVY EQUIPMENT UTILIZED DURING CONSTRUCTION.

59. CONTRACTOR TO PATCH AND REPAIR ALL GROUND SURFACES WITHIN THE CONSTRUCTION AREA AS NECESSARY TO PROVIDE A UNIFORM SURFACE AND MAINTAIN EXISTING SURFACE DRAINAGE SLOPES.

60. CONTRACTOR TO REPLACE LANDSCAPE VEGETATION THAT WAS DAMAGED DUE TO CONSTRUCTION, AND TO MODIFY REMAINING IRRIGATION LINES TO OPERATING CONDITION, PROVIDING FULL COVERAGE TO IMPACTED AREAS.

61. IN THE CASE OF ROOFTOP SOLUTIONS FOR EQUIPMENT AND/OR ANTENNA FRAMES WHERE PENETRATION OF EXISTING ROOFING MATERIALS OCCUR, THE GENERAL CONTRACTOR SHALL COORDINATE WITH BUILDING OWNER AND BUILDING ROOFING CONTRACTOR OF RECORD FOR INSTALLATION, PATCH, REPAIR OR ANY ALIGMENTATION TO THE ROOF, AND HAVE THE WORK GUARANTEED UNDER THE ROOFING CONTRACTOR'S WARRANTY FOR MOISTURE PENETRATION OR AND OTHER FUTURE BREACH OF ROOFING INTEGRITY.

62. IN THE CASE OF ROOFTOP SOLUTIONS WITH THE INSTALLATION OF ANTENNAS WITHIN CONCEALED (SHROUDED) SUPPORT FRAMES OR TRIPODS, THE GENERAL CONTRACTOR SHALL COORDINATE WITH THE FRP DESIGNER/FABRICATOR TO ENSURE THAT THE FINAL FRP SHROUD IS SIMULATING (IN APPEARANCE) DESIGNATED EXISTING EXTERIOR BUILDING FACADE MATERIALS, TEXTURES, AND COLORS. THE CONTRACTOR SHALL FURTHERMORE ENSURE THE USE OF COUNTERSUNK FASTENERS IN ALL FRP CONSTRUCTION. WHEN PHOTOSIMULATIONS ARE PROVIDED, THE CONTRACTOR SHALL ENSURE THAT FINAL CONSTRUCTION REPRESENTS WHAT IS INDICATED IN PHOTOSIMULATION. SHOP DRAWINGS SHALL BE PROVIDED TO THE GENERAL CONTRACTOR, CONSTRUCTION COORDINATOR, AND ARCHITECT PRIOR TO FABRICATION AND CONSTRUCTION.

63. IN THE CASE OF ROOFTOP SOLUTIONS FOR EQUIPMENT AND/OR ANTENNA FRAMES WHERE ANCHORING TO A CONCRETE ROOF SLAB IS REQUIRED, CONTRACTORS SHALL CONFIRM (PRIOR TO SUBMITTING BID) WITH CONSULTING CONSTRUCTION COORDINATOR AND ARCHITECT THE PRESENCE OF POST TENSION TENDONS WITHIN THE ROOF SLAB - RESULTING FROM AN UNDOCUMENTED DESIGN CHANGE IN THE EXISTING BUILDING "AS-BUILT DRAWING SET" - HAVING INDICATED AN ORIGINAL DESIGN SOLUTION OF REINFORCED CONCRETE W/ EMBEDDED STEEL REBAR. IN THE EVENT POST TENSION SLAB SOLUTION IS PRESENT, CONTRACTOR SHALL INCLUDE PROVISIONS FOR X-RAY PROCEDURES (INCLUDED IN BID) FOR ALL PENETRATION AREAS WHERE ANCHORING OCCURS.

64. GENERAL & SUB CONTRACTORS SHALL USE STAINLESS STEEL METAL LOCKING TIES FOR ALL CABLE TRAY TIE DOWNS AND ALL OTHER GENERAL TIE DOWNS (WHERE APPLICABLE). PLASTIC ZIP TIES SHALL NOT BE PERMITTED FOR USE ON TOWER NETWORK CARRIER PROJECTS. RECOMMENDED MANUFACTURE SHALL BE: PANDUIT CORP. METAL LOCKING TIES MODEL NO. MLTAS-CP UNDER SERICS-304 (OR EQUAL). PANDUIT PRODUCT DISTRIBUTED BY TRIARC.

65. ALL WORK TO BE DONE BETWEEN HOURS OF 8:00 AM AND 5:00 PM, EXCLUDING HOLIDAYS

SPECIAL NOTES:

1. PLANS PART OF THIS SET ARE COMPLEMENTARY. INFORMATION IS NOT LIMITED TO ONE PLAN. DRAWINGS AND SPECIFICATIONS ARE INSTRUMENTS OF SERVICE AND SHALL REMAIN THE PROPERTY OF THE ARCHITECT, WHETHER THE PROJECT FOR WHICH THEY ARE MADE IS EXECUTED OR NOT. THEY ARE NOT TO BE USED BY THE OWNER ON OTHER PROJECTS OR EXTENSION TO THIS PROJECT EXCEPT BY AGREEMENT IN WRITING AND WITH APPROPRIATE COMPENSATION TO THE ARCHITECT. THESE PLANS WERE PREPARED TO BE SUBMITTED TO GOVERNMENTAL BUILDING AUTHORITIES FOR REVIEW FOR COMPLIANCE WITH APPLICABLE CODES AND IT IS THE SOLE RESPONSIBILITY OF THE OWNER AND/OR CONTRACTOR TO BUILD ACCORDING TO APPLICABLE BUILDING CODES.

2. IF CONTRACTOR OR SUB-CONTRACTOR FIND IT NECESSARY TO DEVIATE FROM ORIGINAL APPROVED PLANS, THEN IT IS THE CONTRACTOR'S AND THE SUB-CONTRACTOR'S RESPONSIBILITY TO PROVIDE THE ARCHITECT WITH 4 COPIES OF THE PROPOSED CHANGES FOR HIS APPROVAL BEFORE PROCEEDING WITH THE WORK. IN ADDITION THE CONTRACTOR AND SUB-CONTRACTORS SHALL BE RESPONSIBLE FOR PROCURING ALL NECESSARY APPROVALS FROM THE BUILDING AUTHORITIES FOR THE PROPOSED CHANGES BEFORE PROCEEDING WITH THE WORK. THE CONTRACTOR AND SUB-CONTRACTORS SHALL BE RESPONSIBLE FOR PROCURING ALL NECESSARY INSPECTIONS AND APPROVALS FROM BUILDING AUTHORITIES DURING THE EXECUTION OF THE WORK.

3. IN EVERY EVENT, THESE CONSTRUCTION DOCUMENTS AND SPECIFICATIONS SHALL BE INTERPRETED TO BE A MINIMUM ACCEPTABLE MEANS OF CONSTRUCTION BUT THIS SHALL NOT RELIEVE THE CONTRACTOR, SUB-CONTRACTOR, AND/OR SUPPLIER/MANUFACTURER FROM PROVIDING A COMPLETE AND CORRECT JOB WHEN ADDITIONAL ITEMS ARE REQUIRED TO THE MINIMUM SPECIFICATION. IF ANY ITEMS NEED TO EXCEED THESE MINIMUM SPECIFICATIONS TO PROVIDE A COMPLETE, ADEQUATE AND SAFE WORKING CONDITION, THEN IT SHALL BE THE DEEMED AND UNDERSTOOD TO BE INCLUDED IN THE DRAWINGS. FOR EXAMPLE, IF AN ITEM AND/OR PIECE OF EQUIPMENT REQUIRES A LARGER WIRE SIZE (I.E. ELECTRICAL WIRE), STRONGER OR LARGER PIPING, INCREASED QUANTITY (I.E. STRUCTURAL ELEMENTS), REDUCED SPACING, AND/OR INCREASED LENGTH (I.E. BOLT LENGTHS, BAR LENGTHS) THEN IT SHALL BE DEEMED AND UNDERSTOOD TO BE INCLUDED IN THE BID/PROPOSAL. THESE DOCUMENTS ARE MEANT AS A GUIDE AND ALL ITEMS REASONABLY INFERRED SHALL BE DEEMED TO BE INCLUDED.

4. THESE CONTRACT DOCUMENTS AND SPECIFICATIONS SHALL NOT BE CONSTRUED TO CREATE A CONTRACTUAL RELATIONSHIP OF ANY KIND BETWEEN THE ARCHITECT AND THE CONTRACTOR.

THE INFORMATION CONTAINED IN THIS SET OF CONSTRUCTION DOCUMENTS IS PROPRIETARY BY NATURE. ANY USE OR DISCLOSURE OTHER THAN THAT WHICH RELATES TO CARRIER SERVICES IS STRICTLY PROHIBITED.

CLIENT:

at&t

IMPLEMENTATION TEAM:

WESTOWER COMMUNICATIONS

SITE ACQUISITION & PERMITTING TEAM:

RYKA CONSULTING

A&E TEAM:

MORRISON HERSHFIELD
10900 NE 8th, Suite 810,
Bellevue, WA 98004
Tel: 425.451.1301 Fax: 425.289.5956
www.morrisonhershfield.com

PROFESSIONAL CERTIFICATION
3259
REGISTERED ARCHITECT
ROBERT JERRY LARA
STATE OF WASHINGTON
ROBERT JERRY LARA
STATE OF WASHINGTON
RA 8259

PROJECT:

LAKE HILLS PARK
SBI636
1200 164TH AVENUE SE
BELLEVUE, WA 98009

REVISIONS

NO.	DATE	DESCRIPTION	INITIAL
A	04/15/11	90% CLIENT REVIEW	KJ
0	03/01/12	100% CLIENT REVIEW	KJ

NOT FOR CONSTRUCTION UNLESS LABELED AS CONSTRUCTION SET

A/E PROJECT NO.:	810020J
DRAWN BY:	KB
REVIEWED BY:	RB

SHEET TITLE
GENERAL NOTES

SHEET NUMBER
G-1

DESIGN CRITERIA:

1. THE STRUCTURAL DESIGN OF THIS PROJECT IS IN ACCORDANCE WITH THE INTERNATIONAL BUILDING CODE 2009 WITH WASHINGTON STATE BUILDING CODE AMENDMENTS (2009 IBC)
2. DESIGN LOADS:
   DESIGN DATA FOR BELLEVUE, WA
   - ROOF SNOW LOAD ———— N/A (NOT A ROOFTOP SOLUTION)
   - BASIC WIND SPEED ———— 85 MPH (ASCE7-05 3 SECOND GUSTS)
   - WIND EXPOSURE ———— C
   - SEISMIC ZONE ———— ---

CONCRETE NOTES:

1. ALL CONCRETE CONSTRUCTION SHALL BE IN ACCORDANCE WITH ACI-318.
2. CONCRETE SHALL BE MIXED, PROPORTIONED, CONVEYED AND PLACED IN ACCORDANCE WITH CHAPTER 19 OF THE 2006 IBC. STRENGTHS AT 28 DAYS AND MIX CRITERIA SHALL BE AS FOLLOWS.

TYPE OF CONSTRUCTION	28 DAY STRENGTHS (f'c)	W/C RATIO	MINIMUM CEMENT CONTENT PER CUBIC YARD
A. SLABS ON GRADE TOPPING SLABS CONCRETE PIERS	4,000 PSI	≤ .45	6 ½ SACKS
B. ALL STRUCTURAL CONCRETE EXCEPT WALLS	4,000 PSI	≤ .45	6 ½ SACKS
C. CONCRETE WALLS	4,000 PSI	≤ .45	6 ½ SACKS

   CEMENT SHALL BE ASTM C150, PORTLAND CEMENT TYPE II U.N.O.
3. THE GENERAL CONTRACTOR SHALL SUPERVISE AND BE RESPONSIBLE FOR THE METHODS AND PROCEDURES OF CONCRETE PLACEMENT.
4. ALL CONCRETE WITH SURFACES EXPOSED TO STANDING WATER SHALL BE AIR-ENTRAINED WITH AN AIR-ENTRAINING AGENT CONFORMING TO ASTM C260, C494, C618, C989 AND C1017. TOTAL AIR CONTENT SHALL BE IN ACCORDANCE WITH TABLE 1904.2.1 OF THE 2006 IBC.
5. REINFORCING STEEL SHALL CONFORM TO ASTM A615 (INCLUDING SUPPLEMENT S1), GRADE 60, fy=60,000 PSI. EXCEPTIONS: ANY BARS SPECIFICALLY SO NOTED ON THE DRAWINGS SHALL BE GRADE 40, fy=40,000 PSI. GRADE 60 REINFORCING BARS INDICATED ON DRAWINGS TO BE WELDED SHALL CONFORM TO ASTM A706. REINFORCING COMPLYING WITH ASTM A615(S1) MAY BE WELDED ONLY IF MATERIAL PROPERTY REPORTS INDICATING CONFORMANCE WITH WELDING PROCEDURES SPECIFIED IN A.W.S. D14 ARE SUBMITTED.
6. REINFORCING STEEL SHALL BE DETAILED (INCLUDING HOOKS AND BENDS) IN ACCORDANCE WITH ACI 315 AND 318. LAP ALL CONTINUOUS REINFORCEMENT AT LEAST 30 BAR DIAMETERS OR A MINIMUM OF 2'-0". PROVIDE CORNER BARS AT ALL WALL AND FOOTING INTERSECTIONS. LAP CORNER BARS AT LEAST 30 BAR DIAMETERS OR A MINIMUM OF 2'-0". LAP ADJACENT MATS OF WELDED WIRE FABRIC A MINIMUM OF 8" AT SIDES AND ENDS.
7. WELDED WIRE FABRIC SHALL CONFORM TO ASTM A-185.
8. SPIRAL REINFORCEMENT SHALL BE PLAIN WIRE CONFORMING TO ASTM A615, GRADE 60, fy=60,000 PSI.
9. NO BARS PARTIALLY EMBEDDED IN HARDENED CONCRETE SHALL BE FIELD BENT UNLESS SPECIFICALLY SO DETAILED OR APPROVED BY THE CONSULTANT.
10. CONCRETE PROTECTION (COVER) FOR REINFORCING STEEL SHALL BE AS FOLLOWS:
    - FOOTINGS AND OTHER UNFORMED SURFACES, EARTH FACE — 3"
    - FORMED SURFACES EXPOSED TO EARTH OR WEATHER — (#5 BARS OR LARGER) 2"; (#5 BARS OR SMALLER) 1 1/2"
    - SLABS AND WALLS (INTERIOR FACE) — 3/4"
11. BARS SHALL BE SUPPORTED ON CHAIRS OR DOBIE BRICKS.
12. ANCHOR BOLTS TO CONFORM TO ASTM A307.
13. NON-SHRINK GROUT SHALL BE FURNISHED BY AN APPROVED MANUFACTURER AND SHALL BE MIXED AND PLACED IN STRICT ACCORDANCE WITH THE MANUFACTURER'S PUBLISHED RECOMMENDATIONS. GROUT STRENGTH SHALL BE AT LEAST EQUAL TO THE MATERIAL ON WHICH IT IS PLACED (3,000 PSI MINIMUM).
14. ALL EXPANSION ANCHORS TO BE HILTI BRAND. ADHESIVE ANCHORS REQUIRE TESTING TO CONFIRM CAPACITY UNLESS WAIVED BY ENGINEER.

STRUCTURAL STEEL NOTES:

1. SHOP DRAWINGS FOR STRUCTURAL STEEL SHALL BE SUBMITTED TO THE CONSULTANT FOR REVIEW PRIOR TO FABRICATION.
2. STRUCTURAL STEEL DESIGN, FABRICATION AND ERECTION (INCLUDING FIELD WELDING, HIGH STRENGTH FIELD BOLTING, EXPANSION BOLTS, AND THREADED EXPANSION ANCHORS) SHALL BE BASED ON THE A.I.S.C. "SPECIFICATION FOR THE DESIGN, FABRICATION, AND ERECTION OF STRUCTURAL STEEL FOR BUILDINGS" LATEST EDITION. SUPERVISION SHALL BE IN ACCORDANCE WITH 2006 IBC CHAPTER 22, BY A QUALIFIED TESTING AGENCY DESIGNATED BY THE CONSULTANT. THE CONSULTANT SHALL BE FURNISHED WITH A COPY OF ALL INSPECTION REPORTS AND TEST RESULTS.
3. STRUCTURAL STEEL SHALL CONFORM TO THE FOLLOWING REQUIREMENTS:

   TYPE OF MEMBER

   A. PLATES, SHAPES, ANGLES, AND RODS — ASTM A36, Fy 36 KSI
   B. SPECIAL SHAPES AND PLATES — ASTM A572, Fy 50 KSI
   C. PIPE COLUMNS — ASTM A53, Fy 35 KSI
   D. STRUCTURAL TUBING — ASTM A500, Fy 46 KSI
   E. ANCHOR BOLTS — ASTM A307
   F. CONNECTION BOLTS — ASTM A325 TWIST-OFF-TYPE
4. ALL MATERIAL TO BE HOT DIPPED GALVANIZED AFTER FABRICATION PER A123/A123M-00.
5. ALL WELDING SHALL BE IN CONFORMANCE WITH A.I.S.C. AND AWS STANDARDS AND SHALL BE PERFORMED BY W.A.B.O. CERTIFIED WELDERS USING E70 XX ELECTRODES. ONLY PREQUALIFIED WELDS (AS DEFINED BY AWS) SHALL BE USED. WELDING OF GRADE 60 REINFORCING BARS (IF REQUIRED) SHALL BE PERFORMED USING LOW HYDROGEN ELECTRODES. WELDING OF GRADE 40 REINFORCING BARS (IF REQUIRED) SHALL BE PERFORMED USING E70 XX ELECTRODES. WELDING WITHIN 4" OF COLD BENDS IN REINFORCING STEEL IS NOT PERMITTED. SEE REINFORCING NOTE FOR MATERIAL REQUIREMENTS OF WELDED BARS.
6. COLD-FORMED STEEL FRAMING MEMBERS SHALL BE OF THE SHAPE, SIZE, AND GAGE SHOWN ON THE PLANS. PROVIDE MINIMUM SECTION PROPERTIES INDICATED. ALL COLD-FORMED STEEL FRAMING SHALL CONFORM TO THE A.I.S.S. "SPECIFICATION FOR THE DESIGN OF COLD-FORMED STEEL STRUCTURAL MEMBERS."
7. BOLTED CONNECTIONS SHALL USE BEARING TYPE ASTM A325 BOLTS (3/4" DIA.) AND SHALL HAVE A MINIMUM OF TWO BOLTS UNLESS NOTED OTHERWISE.
8. NON-STRUCTURAL CONNECTIONS FOR STEEL GRATING MAY USE 5/8" DIA. ASTM A307 BOLTS UNLESS NOTED OTHERWISE.
9. ALL STEEL WORK SHALL BE PAINTED IN ACCORDANCE WITH THE DESIGN & CONSTRUCTION SPECIFICATION AND IN ACCORDANCE WITH ASTM A36 UNLESS NOTED OTHERWISE.
10. ALL WELDS TO BE 1/4" FILLET UNLESS NOTED OTHERWISE.
11. TOUCH UP ALL FIELD DRILLING AND WELDING WITH 2 COATS OF GALVACON (ZINC RICH PAINT) OR APPROVED EQUAL.

TOWER/POLE NOTES:

1. VERIFICATION THAT THE EXISTING TOWER/POLE CAN SUPPORT THE PROPOSED ANTENNA LOADING IS TO BE DONE BY OTHERS.
2. PROVIDE SUPPORTS FOR THE ANTENNA COAX CABLES TO THE ELEVATION OF ALL INITIAL AND FUTURE ANTENNAS. ANTENNA COAX CABLES ARE TO BE SUPPORTED AND RESTRAINED AT THE CENTERS SUITABLE TO THE MANUFACTURER'S REQUIREMENTS.

SAFETY PROGRAM:

1. CONTRACTOR SHALL BE RESPONSIBLE FOR MAINTAINING AND DOCUMENTING THEIR OWN SAFETY TRAINING PROGRAM.

SYMBOLS:

- GRID REFERENCE
- DETAIL REFERENCE
- ELEVATION REFERENCE
- SECTION REFERENCE
- CENTERLINE
- PROPERTY/LEASE LINE
- MATCH LINE
- WORK POINT
- GROUND CONDUCTOR
- TELEPHONE CONDUIT
- ELECTRICAL CONDUIT
- COAXIAL CABLE
- OVERHEAD SERVICE CONDUCTORS
- GROUT OR PLASTER
- (E) BRICK
- (E) MASONRY
- CONCRETE
- EARTH
- GRAVEL
- PLYWOOD
- SAND
- WOOD CONTINUOUS
- WOOD BLOCKING
- STEEL
- (N) NEW
- (E) EXISTING
- NEW ANTENNA
- EXISTING ANTENNA
- GROUND ROD
- GROUND BUS BAR
- MECHANICAL GRND. CONN.
- CADWELD
- GROUND ACCESS WELL
- ELECTRIC BOX
- TELEPHONE BOX
- LIGHT POLE
- FND. MONUMENT
- SPOT ELEVATION
- SET POINT
- REVISION

SPECIAL INSPECTIONS REQUIRED:

SOILS COMPLIANCE PRIOR TO FOUNDATION INSPECTION
CONCRETE OVER 4000 PSI (6½ SACK MIX) AT 28 DAYS
CONCRETE PLACEMENT AT SLAB ON GRADE
WRITTEN CERTIFICATION FOR PROPER PLACEMENT OF REINFORCEMENTS AT SLAB ON GRADE
FOUNDATION EXCAVATION AND FILL INCLUDING UTILITY TRENCHES
CERTIFICATION OF BUILDING PAD, FOUNDATION AND FILL BY THE GEOTECHNICAL ENGINEER OF RECORD

- ☐ VERIFICATIONS OF MILL REPORT
- ☐ IDENTIFICATION OF STEEL AND AT JOB SITE
- ☐ ADHESIVE BOLTS IN CONCRETE OR MASONRY
- ☐ ANCHOR BOLTS INSTALLATION AND PLACEMENT IN CONCRETE
- ☐ HIGH STRENGTH BOLTING
- ☐ SPRAYED -ON- FIREPROOFING
- ☐ STRUCTURAL MASONRY
- ☐ PRESTRESSED CONCRETE
- ☐ ALL FIELD WELDING
- ☐ REINFORCING PLACEMENT
- ☐ DESIGNER SPECIFIED (SEE SHEET#___)
- ☐ OTHER _____

SUBMITTAL DOCUMENTS FOR DEFERRED SUBMITTAL ITEMS SHALL BE SUBMITTED TO THE ARCHITECT OR ENGINEER OF RECORD, WHO SHALL REVIEW THEM AND FORWARD THEM TO THE BUILDING OFFICIAL WITH A NOTATION INDICATING THAT THE DEFERRED SUBMITTAL DOCUMENTS HAVE BEEN REVIEWED AND THAT THEY HAVE BEEN FOUND TO BE IN GENERAL CONFORMANCE WITH THE DESIGN OF THE BUILDING. THE DEFERRED AND SUBMITTAL ITEMS SHALL NOT BE INSTALLED UNTIL THEIR DESIGN AND SUBMITTAL DOCUMENTS HAVE BEEN APPROVED BY THE BUILDING OFFICIAL.

THE INFORMATION CONTAINED IN THIS SET OF CONSTRUCTION DOCUMENTS IS PROPRIETARY BY NATURE. ANY USE OR DISCLOSURE OTHER THAN THAT WHICH RELATES TO CARRIER SERVICES IS STRICTLY PROHIBITED.

CLIENT:

at&t

IMPLEMENTATION TEAM:

WESTOWER COMMUNICATIONS

SITE ACQUISITION & PERMITTING TEAM:

RYKA

A&E TEAM:

MORRISON HERSHFIELD
10900 NE 8th, Suite 810,
Bellevue, WA 98004
Tel: 425.451.1301 Fax: 425.209.5958
www.morrisonhershfield.com

PROFESSIONAL CERTIFICATION:

3259 REGISTERED ARCHITECT
ROBERT JERRY LARA
STATE OF WASHINGTON

ROBERT JERRY LARA
STATE OF WASHINGTON
RA 3259

PROJECT

LAKE HILLS PARK
SBI636
1200 164TH AVENUE SE
BELLEVUE, WA 98009

REVISIONS

NO.	DATE	DESCRIPTION	INITIAL
A	04/15/11	90% CLIENT REVIEW	JC
B	10/01/12	100% CLIENT REVIEW	KB

NOT FOR CONSTRUCTION UNLESS LABELED AS CONSTRUCTION SET

A/E PROJECT NO.:	8100700
DRAWN BY:	KB
REVIEWED BY:	RH

SHEET TITLE
GENERAL NOTES & SYMBOLS

SHEET NUMBER
G-2

Lake Hills Park - View 1

1200 164th Avenue SE, Bellevue, WA 98009
AT&T Site ID: SB1636

Received
MAR 19 2012
Permit Processing

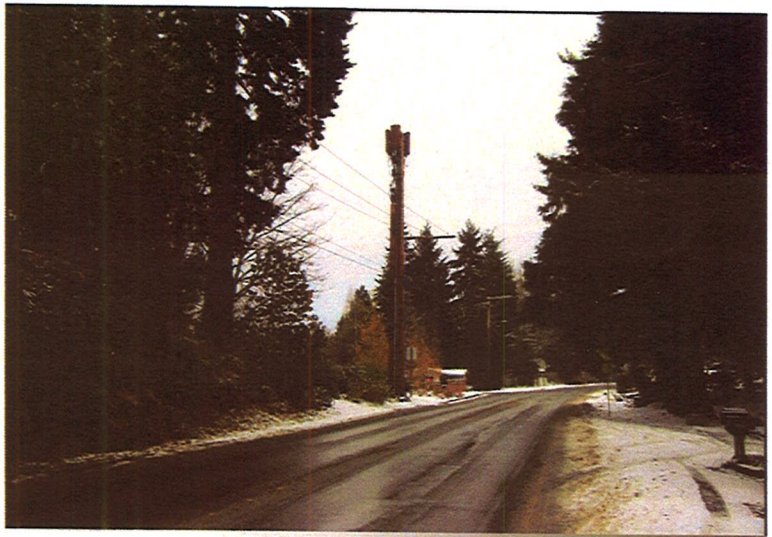

Before Installation

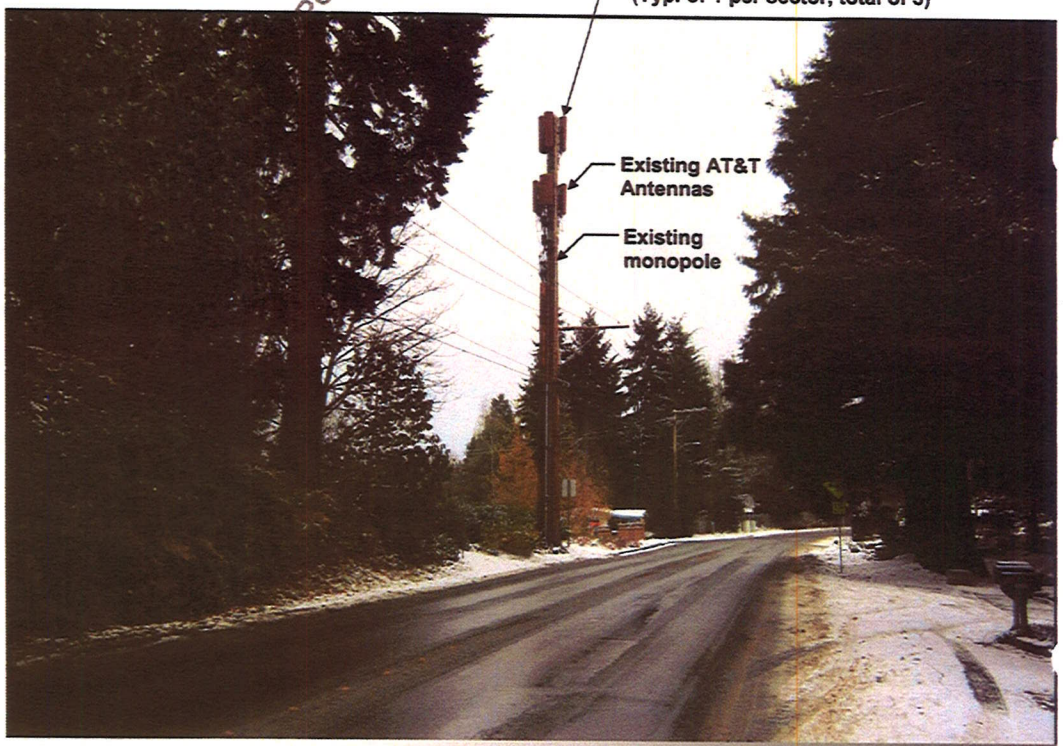

After Installation

at&t
AT&T Mobility
RTC Building 3
16221 NE 72nd Way
Redmond, WA 98052

GoodmanNetworks
8815 122nd ave. NE
Kirkland, WA 98033
PH: (206) 321-1116

MORRISON HERSHFIELD
10900 NE 8th, Suite 810
Bellevue, WA 98004
Tel: 425.451.1301 Fax: 425.289.5958
www.morrisonhershfield.com

Lake Hills Park - View 2

1200 164th Avenue SE, Bellevue, WA 98009
AT&T Site ID: SB1636

Before Installation

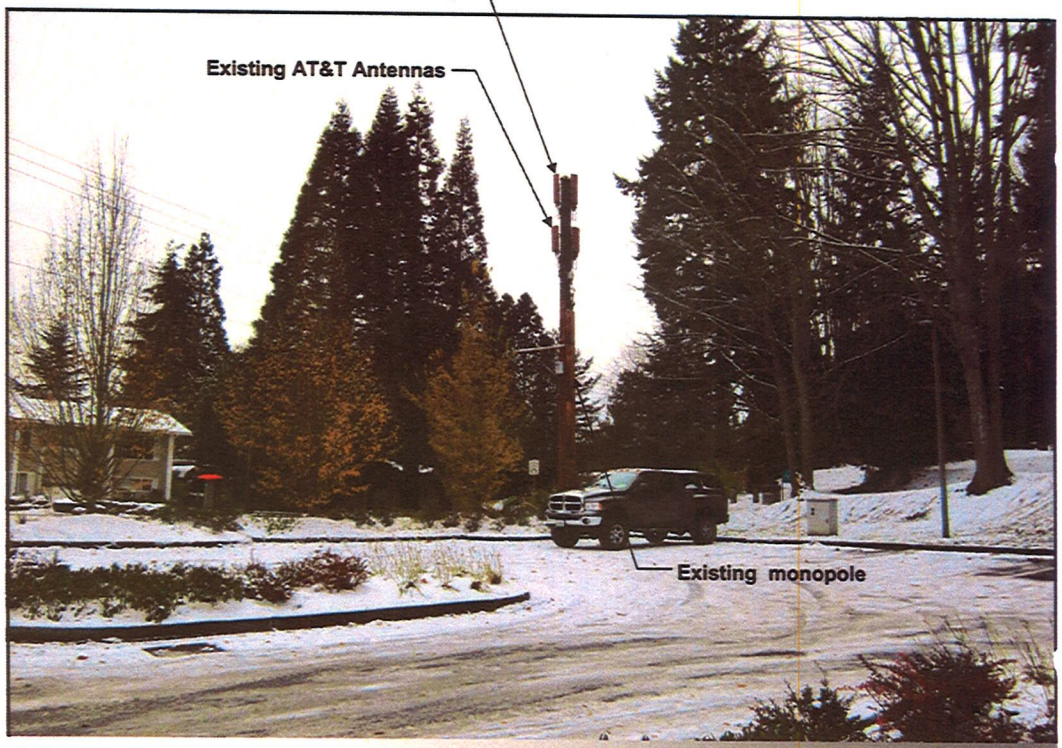

After Installation

AT&T Mobility
RTC Building 3
16221 NE 72nd Way
Redmond, WA 98052

GoodmanNetworks
8815 122nd ave. NE
Kirkland, WA 98033
PH: (206) 321-1116

MORRISON HERSHFIELD
10900 NE 8th, Suite 810
Bellevue, WA 98004
Tel: 425.451.1301 Fax: 425.289.5958
www.morrisonhershfield.com

Sally Nichols
May 30, 2012

City of Bellevue Submittal Requirements	27a

ENVIRONMENTAL CHECKLIST

4/18/02

If you need assistance in completing the checklist or have any questions regarding the environmental review process, please visit or call the Permit Center (425-452-6864) between 8 a.m. and 4 p.m., Monday through Friday (Wednesday, 10 to 4). Our TTY number is 425-452-4636.

BACKGROUND INFORMATION

Property Owner: City of Bellevue ✓

Proponent: AT+T Mobility ✓

Contact Person: ~~Robert Evans~~ Josh Hawes ✓
(If different from the owner. All questions and correspondence will be directed to the individual listed.) ✓

Address: ~~2312 N 38th St, Seattle WA 98103~~ 918 S. Horton St, Suite #1002

Phone: ~~425-652-5727~~ ~~4205~~ 206-523-1941 Seattle, WA 98134 ✓

Proposal Title: SB 1636 Lake Hills park ✓ AT&T Mobility ✓

Proposal Location: 1200 164th Ave SE, Bellevue WA 98009 ✓
(Street address and nearest cross street or intersection) Provide a legal description if available.

Please attach an 8 ½" x 11" vicinity map that accurately locates the proposal site.

Give an accurate, brief description of the proposal's scope and nature:

1. General description: Applicant proposes to modify an existing wireless facility. Increase pole ht. by 8', add 3 antenna and ancillary equip. Mech eqip. with exist underground vault. ✓
2. Acreage of site: N/A
3. Number of dwelling units/buildings to be demolished: None ✓
4. Number of dwelling units/buildings to be constructed: none ✓
5. Square footage of buildings to be demolished: none ✓
6. Square footage of buildings to be constructed: none ✓
7. Quantity of earth movement (in cubic yards): none ✓
8. Proposed land use: wireless telecommunication facility. ✓
9. Design features, including building height, number of stories and proposed exterior materials: ✓
   Proposed Final height. 59' 11".
10. Other

Received
JUL 29 2011
Permit Processing

Received
MAR 19 2012
Permit Processing

SN

d. Are there surface indications or history of unstable soils in the immediate vicinity? If so, describe.

no

e. Describe the purpose, type, and approximate quantities of any filling or grading proposed. Indicate source of fill. none

f. Could erosion occur as a result of clearing, construction, or use? If so, generally describe. no clearing

no

g. About what percent of the site will be covered with impervious surfaces after project construction (for example, asphalt or buildings)? unchanged

h. Proposed measures to reduce or control erosion, or other impacts to the earth, if any:

none necessary

existing pole and mech. vault. minor trenching for new coax - less than 1000 ft disturbance

2. AIR

a. What types of emissions to the air would result from the proposal (i.e. dust, automobile odors, and industrial wood smoke) during construction and when the project is completed? If any, generally describe and give approximate quantities if known.

none

b. Are there any off-site sources of emissions or odor that may affect your proposal? If so, generally describe.

no

c. Proposed measures to reduce or control emissions or other impacts to the air, if any:

none necessary

3. WATER

a. Surface

(1) Is there any surface water body on or in the immediate vicinity of the site (including year-round and seasonal streams, saltwater, lakes, ponds, wetlands)? If yes, describe type and provide names. If

no

GN

c. Water Runoff (Including storm water)

(1) Describe the source of runoff (including storm water) and method of collection and disposal, if any (include quantities, if known). Where will this water flow? Will this water flow into other waters? If so, describe. none

(2) Could waste materials enter ground or surface waters? If so, generally describe.

no

d. Proposed measures to reduce or control surface, ground, and runoff water impacts, if any:

none

4. Plants

a. Check or circle types of vegetation found on the site:

- ☒ deciduous tree: alder, maple, aspen, other
- ☒ evergreen tree: fir, cedar, pine, other
- ☒ shrubs
- ☒ grass
- ☐ pasture
- ☐ crop or grain
- ☐ wet soil plants: cattail, buttercup, bulrush, skunk cabbage, other
- ☐ water plants: water lily, eelgrass, milfoil, other
- ☐ other types of vegetation

landscape screening of exist underground vault

b. What kind and amount of vegetation will be removed or altered?

none

restoration of minor disturbance due to trenching LUC 20.20.195.D.4c

c. List threatened or endangered species known to be on or near the site.

none

d. Proposed landscaping, use of native plants, or other measures to preserve or enhance vegetation on the site, if any:

none

TN

i. Proposed measures to ensure the proposal is compatible with existing and projected land uses and plans, if any: none

9. Housing

a. Approximately how many units would be provided, if any? Indicate whether high, middle, or low-income housing.
none

b. Approximately how many units, if any, would be eliminated? Indicate whether high, middle, or low-income housing. none

c. Proposed measures to reduce or control housing impacts, if any:
none

10. Aesthetics

a. What is the tallest height of any proposed structure(s), not including antennas; what is the principal exterior building material(s) proposed? 59' 11"

b. What views in the immediate vicinity would be altered or obstructed?
very minor alteration of current impact.

c. Proposed measures to reduce or control aesthetic impacts, if any:
equipment painted to match

Per conditions of approval –
1) Paint all antennas & equip (exist or proposed) dark brown
2) Flush mounted antennas
3) pull cables tight
4) should wood & painted to match exist pole
LUC 20.20.195 B&D

11. Light and Glare

a. What type of light or glare will the proposal produce? What time of day would it mainly occur?
none

b. Could light or glare from the finished project be a safety hazard or interfere with views?
no

SN

f. How many vehicular trips per day would be generated by the completed project? If known, indicate when peak volumes would occur. 1 per month maintenance

g. Proposed measures to reduce or control transportation impacts, if any: none

15. Public Services

a. Would the project result in an increased need for the public services (for example: fire protection, police protection, health care, schools, other)? If so, generally describe.

No

EMF certification in project file

b. Proposed measures to reduce or control direct impacts on public services, if any.

none

16. Utilities

a. Circle utilities currently available at the site: electricity, natural gas, water, refuse service, telephone, sanitary sewer, septic system, other.

electric, telephone

b. Describe the utilities that are proposed for the project, the utility providing the service, and the general construction activities on the site or in the immediate vicinity which might be needed.

none new

Signature

The above answers are true and complete to the best of my knowledge. I understand that the lead agency is relying on them to make its decision.

Signature.....

Date Submitted.....5/28/11.....

City of Bellevue Map Guide

Streets & Street Names

Highway

Abc **Street Names**

Hydrology

Lakes

Parks Sites

City Parks

School Layers

School Properties

Districts - Areas

City Limit Lines

Bellevue

Other

City Boundaries

Bellevue

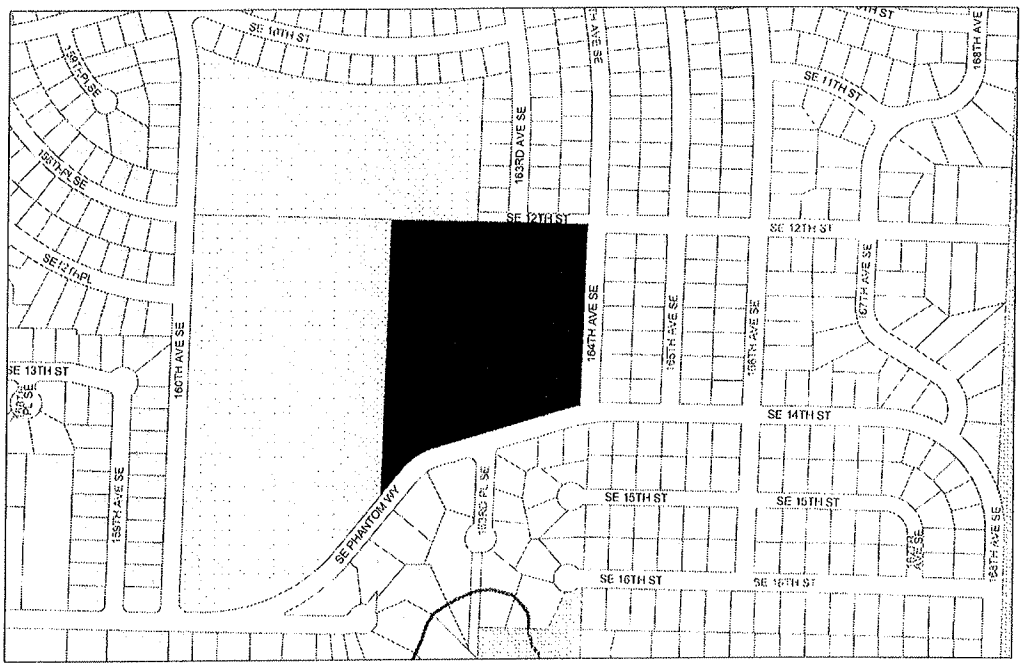

SCALE 1 : 7,069

500 0 500 1,000 1,500

FEET