DEVELOPMENT SERVICES DEPARTMENT
ENVIRONMENTAL COORDINATOR
450 110TH AVENUE NE, P.O. BOX 90012
BELLEVUE, WA 98009-9012

DETERMINATION OF NON-SIGNIFICANCE

PROPONENT:
Rick Anderson, Architect

LOCATION OF PROPOSAL:
13906 NE 9th Place, Bellevue, WA

DESCRIPTION OF PROPOSAL:.
Application for Design Review approval to construct 66 additional apartment units amongst two new buildings within an existing apartment community.

FILE NUMBER: 10-106190-LA

The Environmental Coordinator of the City of Bellevue has determined that this proposal does not have a probable significant adverse impact upon the environment. An Environmental Impact Statement (EIS) is not required under RCW 43.21C.030(2)(C). This decision was made after the Bellevue Environmental Coordinator reviewed the completed environmental checklist and information filed with the Development Services Section. This information is available to the public on request.

☐ There is no comment period for this DNS

☒ This DNS is issued after using the optional DNS process in WAC 197-11-355. There is no further comment period on the DNS. There is a 14-day appeal period. Only persons who submitted written comments before the DNS was issued may appeal the decision. A written appeal must be filed in the City Clerk's Office by 5 p.m. on

☐ This DNS is issued under WAC 197-11-340(2) and is subject to a 14-day comment from the date below. Comments must be submitted by 5 p.m. on _____.

This DNS may be withdrawn at any time if the proposal is modified so that it is likely to have significant adverse environmental impacts; if there is significant new information indicating, or on, a proposals probable significant adverse environmental impacts (unless a non-exempt license has been issued if the proposal is a private project): or if the DNS was procured by misrepresentation or lack of material disclosure.

Carol V Helland
Environmental Coordinator

12/23/10
Date

OTHERS TO RECEIVE THIS DOCUMENT:
State Department of Fish and Wildlife
State Department of Ecology, Shoreline Planner N.W. Region
Army Corps of Engineers
Attorney General
Muckleshoot Indian Tribe

City of Bellevue
Development Services Department
Land Use Staff Report

Proposal Name:	**Woodland Commons**
Proposal Address:	13906 NE 9th Place
Proposal Description:	Application for Design Review approval to construct 66 additional apartment units amongst two new buildings within an existing apartment community.
File Number:	**10-117201-LD**
Applicant:	Rick Anderson, Architect
Decisions Included:	Design Review (Process II)
Planner:	Mike Upston, AICP 425/452-2970
State Environmental Policy Act Threshold Determination:	**Determination of Non-Significance (DNS)**

Carol V Helland
Carol V. Helland, Environmental Coordinator
Development Services Department

Director's Decision:	**Approval with Conditions** Michael A. Brennan, Director Development Services Department

By: Carol V Helland
Carol V. Helland, Land Use Director
Development Services Department

Application Date:	6/30/10
Decision Publication Date:	12/23/10
Appeal Deadline:	1/6/11

For information on how to appeal a proposal, visit Development Services at City Hall or call (425) 452-6800. Comments on State Environmental Policy Act (SEPA) Determinations can be made with or without appealing the proposal within the noted comment period for a SEPA Determination. Appeal of the Decision must be received in the City's Clerk's Office by 5 PM on the date noted for appeal of the decision.

CONTENTS

I. Request/Proposal Description ..... Pg. 2

II. Site Description, Zoning & Land Use Context ..... Pg. 2

III. Consistency with Land Use Code/Zoning Requirements ..... Pg. 3

IV. Public Notice & Comment ..... Pg. 5

V. Technical Review ..... Pg. 6

VI. State Environmental Policy Act (SEPA) ..... Pg. 7

VII. Decision Criteria ..... Pg. 9

VIII. Decision ..... Pg. 12

IX. Conditions of Approval ..... Pg. 12

ATTACHED:

Project Plans & Drawings

I. REQUEST/PROPOSAL DESCRIPTION

The applicant requests Design Review approval to construct 66 additional apartment units amongst two new buildings within an existing apartment community.

II. SITE DESCRIPTION, ZONING, & LAND USE CONTEXT

A. Site Description

The existing 15.3 acre apartment community is bound by 136th Avenue NE on the west and 140th Avenue NE on the east. This is one of two apartment communities owned by the same entity; the other is Foothill Commons located immediately to the south, bordered by NE 8th Street on its south side. See map to the right.

B. Zoning

The site is split-zoned between R-20 and R-30 multifamily residential land use districts, and is overlaid by the Transition Area Design District on a portion of its western side, depicted with red and white cross-hatching. See map below.

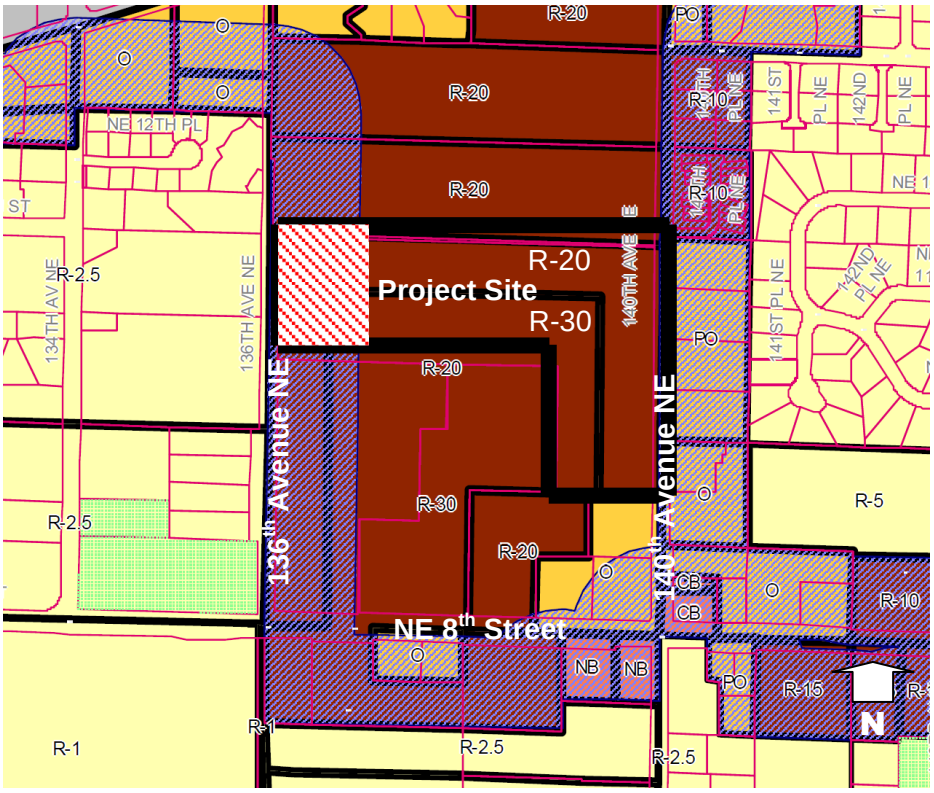

C. Land Use Context

There are a large variety of land uses around this project site. More multifamily development lies to the immediate north and south, with commercial development a bit further to the south, and further north is a mix of commercial and industrial uses. Single family is found to the immediate west (hence the Transition Area overlay mentioned above), and office development lies to the immediate east with more single family neighborhoods beyond.

III. CONSISTENCY WITH LAND USE CODE/ ZONING REQUIREMENTS

A. General Provisions of the Land Use Code

1. Uses

Uses are regulated by LUC 20.10.400 (Use Charts). While the proposal is simply an intensification of the existing multifamily residential use already permitted in the multifamily residential (R-20 and R-30) districts, it is subject to Design Review since a portion of the project area is overlaid by the Transition Area Design District (LUC 20.25B.030) in response to the single family residential zoning to the immediate west.

2. Dimensional Requirements

All applicable dimensional requirements of the Land Use Code will be met. Interestingly, none of the dimensional requirements prescribed within the Transition Area Design District (LUC 20.25B.040) apply to this project since the buildings will be beyond the transition area boundary as depicted in the graphic to the right. Refer to the chart below for specific dimensional requirements, as well as the attached Project Plans & Drawings.

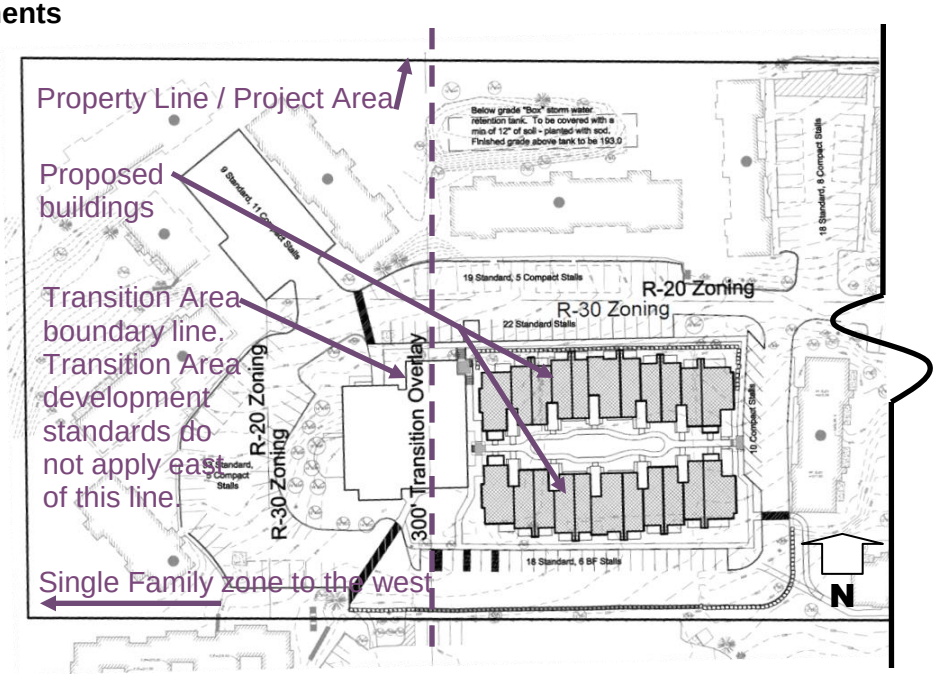

	Permitted/Required	Proposed
Building Height	40 feet maximum for buildings located within the R-30 land use district. Both proposed buildings are located wholly within this district; none are located within the R-20 land use district.	The highest elevation is 33.2 feet from average finished grade to the mid-point of the pitched roof for both buildings. (See plan sheet A3.3)
Lot Coverage	35% maximum (LUC 20.20.010)	26% existing & proposed buildings.
Impervious Surface	80% maximum (LUC 20.20.010)	45% existing & proposed surfaces.
Parking	<u>Existing Buildings</u> 1.2 stalls/1 bdrm unit @ 128 units = 154 1.6 stalls/2 bdrm unit @ 92 units = 148 1.8 stalls/3 bdrm unit @ 16 units = 29 4 stalls/1,000 SF office = 15 <u>Proposed Buildings</u> 1.2 stalls/1 bdrm unit @ 48 units = 58 1.6 stalls/2 bdrm unit @ 18 units = 29 Total minimum required = 433 stalls (LUC 20.20.590.F.1)	442 stalls proposed. (Refer to plan sheet A0.3.)

Dwelling Units per Acre	Maximum 30 units/acre in R-30 (LUC 20.20.010) (Note: No additional units are proposed within the area zoned R-20.)	23 units/acre Calculation: 277,041 SF/43,560 SF = 6.36 acres within the R-30 area. 80 existing units + 66 proposed = 146 total units/6.36 acres = 23 units/acre
Landscape	Compliance with LUC 20.20.520 and 20.20.900	The landscape plan complies with all Land Use Code landscape requirements (see sheets L1.1 - 2). Conditions of approval are included in Section IX of this report requiring landscape installation and maintenance assurance devices.
Recycling & Solid Waste Collection Area	At least one collection area for every 30 dwelling units at 1.5 SF/unit per LUC 20.20.725 as calculated below, and visually screened per LUC 20.20.525. 66 units divided by 30 units/collection area = 3 collection areas. 1.5 SF X 66 units = 99 SF min per collection area.	Existing trash collection areas throughout the complex which serve multiple buildings in designated areas.
Mechanical Equipment	Located on the roof & visually screened, within the bldg or below grade. (LUC 20.20.525)	All mechanical equipment will be located inside the buildings.
Setbacks	Not applicable since the proposed buildings will be located in the interior of the existing apartment community and surrounded by other existing buildings which already comply with the setback requirements.	

IV. PUBLIC NOTICE AND COMMENT

Application Date: June 30, 2010
Application Completeness Date: July 28, 2010
Notice of Application published: August 12, 2010
Public Notice Sign installed: August 12, 2010
Minimum Comment Period ended: August 26, 2010

Although the minimum required public comment period for this application ended on August 26, 2010, written comments are generally accepted up to the decision date. No comments were received.

V. TECHNICAL REVIEW

A. Clearing & Grading

Clearing & Grading has no comments or requirements for this Design Review; all comments are reserved for construction permit review.

B. Utilities

The City has adequate capacity for providing water, sanitary sewer and storm drainage service for this proposal. Refer to Section IX of this report for Utilities related Conditions of Approval.

C. Building

Building has no comments or requirements for this Design Review; all comments are reserved for construction permit review.

D. Fire Department

Fire has no comments for this Design Review, but does have certain conditions that must be met prior to approval of subsequent construction permits. Refer to Section IX of this report for Utilities related Conditions of Approval.

E. Transportation

Site Access
The proposed project comprises the addition of 66 multi-family units to an existing multi-family development. Access to the proposed project from 140th Avenue NE will be provided via two existing driveways. The driveway approaches are to be modified to meet the current City Standard driveway approach type.

Street Frontage Improvements
Frontage improvements including curb, gutter and sidewalk currently exist along the property frontage on 140th Avenue NE. Some sections must be reconstructed to meet standards as detailed below.

1. The Americans with Disabilities Act (ADA) requires that sidewalk cross slopes not exceed two percent. The sidewalk cross slope may be less than two percent only if the sidewalk has a longitudinal slope sufficient to provide adequate drainage. Bellevue's standard for curb height is six inches, except where curb ramps are needed. Sidewalk modifications and/or replacements shall be constructed in compliance with these requirements. ADA also requires provision of a consistent travel path for visually handicapped pedestrians. Potential tripping hazards are not allowed in the sidewalk.

2. The driveways on 140th Ave NE will keep their existing widths and slopes and shall have a driveway approach type as per the standard drawing DEV-6.

3. No new utility vaults that serve only one development will be allowed within a public sidewalk. Vaults serving a broader public purpose may be located within a public sidewalk.

4. No fixed objects, including fire hydrants, trees, and streetlight poles, are allowed within ten feet of a driveway edge, defined as Point A in standard drawing Dev-6. Fixed objects are defined as anything with breakaway characteristics stronger than a 4-inch by 4-inch wooden post.

5. No new overhead utility lines will be allowed within or across any right of way or sidewalk easement, and existing overhead lines must be relocated underground.

Holiday Construction & Traffic Restrictions
From November 15th to January 5th, construction activities such as hauling and lane closures will be allowed only between the hours of 10:00 p.m. and 6:00 a.m. due to holiday traffic. The dates and times of these restrictions are subject to change. The applicant shall contact the Transportation Department Right-of-Way Section to confirm the specifics of this restriction prior to applying for a Right-of-Way Use Permit, which is issued directly by the Transportation Department.

Use of the Right of Way During Construction
Applicants often request use of the right of way and of pedestrian easements for materials storage, construction trailers, hauling routes, fencing, barricades, loading and unloading and other temporary uses as well as for construction of utilities and street improvements. A Right of Way Use Permit for such activities must be acquired prior to issuance of any construction permit including demolition permit. Sidewalks may not be closed except as specifically allowed by a Right of Way Use Permit.

Pavement Restoration
The City of Bellevue has established the Trench Restoration Program to provide developers with guidance as to the extent of resurfacing required when a street has been damaged by trenching or other activities. Under the Trench Restoration Program, every street in the City of Bellevue has been examined and placed in one of three categories based on the street's condition and the period of time since it has last been resurfaced. These three categories are, "No Street Cuts Permitted," "Overlay Required," and "Standard Trench Restoration." Each category has different trench restoration requirements associated with it. Damage to the street can be mitigated by placing an asphalt overlay well beyond the limits of the trench walls to produce a more durable surface without the unsightly piecemeal look that often comes with small strip patching. Near this project 140th Ave NE has been classified as "Overlay Required."

<u>Refer to Section IX of this report for Transportation related Conditions of Approval.</u>

VI. STATE ENVIRONMENTAL POLICY ACT (SEPA)

The environmental review indicates no probability of significant adverse environmental impacts occurring as a result of the proposal. Therefore, issuance of a Determination of Non-Significance (DNS) is the appropriate threshold determination under the State Environmental Policy Act (SEPA) requirements, with incorporation by reference of the *2009-2020 Transportation Facilities Plan Final Environmental Impact Statement* updated November 2009. This document is available in the Records Office at City Hall, 450 110th Avenue NE.
Adverse impacts which are less than significant are usually subject to City Codes or Standards which are intended to mitigate those impacts. Where such impacts and regulatory items correspond, further documentation is not necessary. For other adverse impacts which are less than significant, Bellevue City Code Sec. 22.02.140 provides substantive authority to mitigate impacts disclosed through the environmental review process.

NOISE

Given the project site's close proximity to other residences, consideration of the construction noise is particularly important. Therefore, conditions of approval pertaining to construction noise are included in Section IX of this report.

TRANSPORTATION

Long Term Impacts and Mitigation

The long-term impacts of development projected to occur in the City by 2020 have been addressed in the City's Transportation Facilities Plan EIS. The impacts of growth which are projected to occur within the City by 2020 are evaluated on the roadway network assuming that all the transportation improvement projects proposed in the City's current Transportation Facilities Plan are in place. The Transportation Facilities Plan EIS divides the City into several Mobility Management Areas (MMAs) for analysis purposes. Woodland Commons lies within MMA # 8, which has a 2020 total growth projection of 136 multifamily units. This development proposes an addition of two buildings with 33 multifamily units in each building, resulting in an increase of 66 multifamily units. Therefore, the volume of proposed development is within the assumptions of the Transportation Facilities Plan EIS.

Traffic impact fees are used by the City to fund street improvement projects to alleviate traffic congestion caused by the cumulative impacts of development throughout the City. Payment of the transportation impact fee, as required by BCC 22.16, contributes to the financing of transportation improvement projects in the current adopted Transportation Facilities Plan, and is considered to be adequate mitigation of long-term traffic impacts. Fee payment is required at the time of building permit issuance.

Mid-Range Impacts and Mitigation

Project impacts anticipated to occur in the next six years are assessed through a concurrency analysis. The Traffic Standards Code (BCC 14.10) requires that development proposals generating 30 or more p.m. peak hour trips undergo a traffic impact analysis to determine if the concurrency requirements of the State Growth Management Act are maintained.

This development will generate approximately 32 new p.m. peak hour trips which were used to check for concurrency. City staff distributed and then assigned project-generated trips to the street network using the City's EMME-2 travel forecasting model with the current Capital Investment Program network. By adding the expected project-generated trips to the traffic volumes in the model, the area average levels of service were determined. To create a baseline condition for comparison, the levels of service were also determined using traffic volumes without the project-generated trips. In this project analysis, no system intersection received 20 or more new p.m. peak hour trips. Neither the maximum area-average levels of service nor the congestion allowances would be exceeded as a result of traffic generated from this proposal. (The concurrency analysis spread sheet is available in the Transportation Department's project file.) Therefore, the proposed development passes the concurrency test. The concurrency test results are included in the Transportation Department file for this development.

The rules of concurrency reservation are outlined in the Traffic Standards Code Director's Rules, updated May 23, 2001. A concurrency determination is issued on the date of issuance of the land use decision. This project complies with the Traffic Standards Code and is receiving a Certificate of Concurrency.

Building permit applications 10-120615-BB and 10-120855-BB were filed for the project and deemed complete on 8/16/2010 and 8/23/2010, respectively. The concurrency reservation will remain in effect for the life of either building permit application, pursuant to BCC 23.05.090.H. At issuance of the building permits, the Certificate of Concurrency will be extended and remain in effect for one additional year (with the possibility of up to two one-year extensions) as provided for in BCC 23.05.100. See the Design Review project file (10-117201-LD) for this certificate.

Short Term Operational Impacts and Mitigation

City staff analyzed the short term operational impacts of this proposal in order to recommend mitigation if necessary. The trips generated by the proposed development are not expected to have a significant impact on the traffic operations at the nearby intersections.

VII. DECISION CRITERIA

A. The Director may approve, or approve with modifications, an application for Design Review if:

1. The proposal is consistent with the Comprehensive Plan.

This project is consistent with the Comprehensive Plan, which includes goals and policies for the provision of housing, site design, and building design. The addition of residential units is consistent with the City's goal of creating and maintaining housing for its population and the region under the State's Growth Management Act. This project is also in alignment with the City's commitment to maintain, strengthen, protect and enhance its existing residential neighborhoods. Specific policies include the following:

Policy HO-17. Encourage infill development on vacant or under-utilized sites that have adequate urban services and ensure that the infill is compatible with the surrounding neighborhoods.

Policy HO-25. Ensure that affordable housing opportunities are not concentrated, but rather are dispersed throughout the city.

Policy HO-30. Encourage preservation, maintenance, and improvements to existing affordable housing.

Consistent with these policies, the proposal involves infilling within an existing residential neighborhood which provides apartment rentals that provide for a range of housing affordability. This is beneficial to the City's housing goals and the region's promotion of jobs/housing balance under the State's Growth Management Act; this project will help provide additional housing for people who live near their jobs Downtown or in other proximate locations within the City.

Policy UD-3. *Encourage a variety of site and building designs which are compatible and consistent with surrounding development and that implement the policies of this plan.*

The architectural details of the buildings are proposed to be contextual while also introducing new materials and colors for a more vibrant, updated northwest appearance. This is consistent with the additions and improvements completed in 2009 in other areas of the Woodland Commons community approved under Design Review 07-130381-LD.

2. The proposal complies with the applicable requirements of this Code.

The proposal complies with all applicable requirements of the Land Use Code. Refer to Section III of this report for specific information on Land Use Code consistency.

3. The proposal addresses all applicable design guidelines or criteria of this Code in a manner which fulfills their purpose and intent.

As conditioned, the proposal complies with all applicable design guidelines contained in LUC 20.25B.050, Transition Area Design District. Key points are summarized as follows:

Site Design Guidelines

Site development should maximize the retention of existing significant vegetation in order to soften the visual impact on adjacent residential uses (LUC 20.25B.050.A.3). Existing buildings and developed landscape areas surround the project site and interface with the adjacent residential uses. Vegetation will not be removed from these areas; it will only be removed in the area of proposed construction.

Surrounding vegetation, topography, street patterns, parking configuration, and building massing should be considered in order to result in a compatible fit between the proposed development and existing residential development (LUC 20.25B.050.A.4). Proposed driveways, parking, landscape areas, topography, and building massing are designed to fit comfortably within the area available and in response to the existing development. In addition, no new access is proposed; existing access to the property is to remain unchanged.

Building Design Guidelines

Building surfaces facing abutting residential districts should be clad with materials which are similar to or compatible with surrounding uses, and which minimize reflected lighting (LUC 20.25B.050.B.1). Proposed cladding on the new buildings will be similar to the materials on the existing buildings, which include lap siding and asphalt shingle roofing. New siding materials proposed are board & batten and stone veneer. See the color drawing of one of the proposed buildings below.

Building facades should incorporate elements such as stepbacks, offsets, angled facets, deep roof overhangs, recesses and other architectural features which serve to break down the scale (LUC 20.25B.050.B.2). The townhouse building elevations provide modulation through the use of bay windows, overhangs, stepbacks and decks. The mix of exterior materials also helps scale down the size of these buildings.

Pitched roof forms are preferred in order to enhance the compatibility with nearby residential areas (LUC 20.25B.050.B.3). Pitched roofs are proposed with a mixture of gables, hips and sheds.

Materials and colors used on the building facades should be compatible with nearby residential buildings and the surrounding natural environment (LUC 20.25B.050.B.2). As described above, proposed cladding and roof material on the new buildings will be compatible with the materials on the existing buildings.

4. The proposal is compatible with, and responds to, the existing or intended character, appearance, and quality of development and physical characteristics of the subject property and immediate vicinity.

The layout of the development is consistent with the existing circulation and topography; no significant grading is required to provide the building pad thus the topographical elements and relationships will remain the same. In addition, the proposed exteriors are consistent with the more favorable design patterns in the immediate vicinity, particularly those associated with the recently completed improvements on this property under Design Review 07-130381-LD.

5. The proposal will be served by adequate public facilities including streets, fire protection, and utilities.

All required public services and facilities are available to the site. Adequate water, sewer, power and gas all exist in the development currently and will simply be extended to serve the new units. Access to the project site is through existing driveways on surrounding arterials; no changes in vehicular or pedestrian access to the site are necessary.

VIII. DECISION

After conducting the various administrative reviews associated with the proposal, including applicable Land Use consistency, SEPA and City Code & Standard compliance reviews, the Director of Planning and Community Development does hereby APPROVE WITH CONDITIONS the subject proposal.

IX. CONDITIONS OF APPROVAL:

The following conditions are imposed under the authority referenced:

A. GENERAL CONDITIONS: The following conditions apply to all phases of development.

1. COMPLIANCE WITH BELLEVUE CITY CODES AND ORDINANCES

The applicant shall comply with all applicable Bellevue City Codes and Ordinances including but not limited to:

Clearing and Grading Code - BCC 23.76	Savina Uzunow	425/452-7860
Bellevue Development Standards	"	"
Transportation Code - BCC 14.60	Rohini Nair	425/452-2569
Trans. Improvement Program - BCC.22.16	"	"
Right-of-Way Use Permit - BCC 14.30	Ron Kessack	425/425-4631
Bellevue Utilities Code - BCC Title 24	Rob Hutchinson	425/452-7903
Construction Codes - BCC Title 23	Behrooz Khorami	425/452-5369
Land Use Code - BCC Title 20	Mike Upston	425/452-2970
Sign Code - BCC Title 22B	"	"
Noise Control - BCC 9.18	"	"
International Fire Code	Adrian Jones	425/452-6032

2. CONSTRUCTION HOURS

Noise related to construction is allowed from 7:00 a.m. to 6:00 p.m. Monday through Friday and 9:00 a.m. to 6:00 p.m. on Saturday. Exceptions to the construction noise hours limitation contained in the Noise Control Code MAY be granted pursuant to 9.18.020.C when necessary to accommodate construction which cannot be undertaken during exempt hours. Prolonged exposure to noise created by extended hour construction activity is likely to have a significant impact on inhabitants of surrounding residential properties during the proposed timeline for construction. In order to minimize detriment on residential uses in the immediate vicinity of the project, the Contractor shall not rely on City issuance of a blanket exemption from the Noise Control Code during the construction period. Allowances for short term work outside of normal construction hours shall be limited and will be reviewed on a case by case basis to verify necessity and ensure appropriate noise mitigation is utilized to protect surrounding uses and properties. Written requests for exemption from the Noise Control Code must be submitted two weeks prior to the scheduled onset of extended hour construction activity. Such request shall include a noise analysis prepared by a noise consultant, including recommendations for achieving the noise limitations of the Noise Ordinance for new residential construction.

Authority: BCC 9.18.040
Reviewer: Mike Upston, Land Use, 425/452-2970

3. USE OF BEST AVAILABLE NOISE ABATEMENT TECHNOLOGY
The use of best available noise abatement technology consistent with feasibility is required during construction to mitigate construction noise impacts to surrounding uses.
Authority: BCC 9.18.020F
Reviewer: Mike Upston, Land Use, 425/452-2970

4. HOLIDAY CONSTRUCTION & TRAFFIC RESTRICTIONS
Construction activities such as hauling and lane closures between November 15th and January 5th will be allowed only between the hours of 10:00 pm and 6:00 am due to holiday traffic. The Transportation Department will be monitoring traffic and may modify this moratorium accordingly.
Authority: BCC 14.30.060
Reviewer: Ron Kessack, Transportation, 425/ 452-4631

5. PRELIMINARY DESIGN APPROVAL
The Utilities Department approval of the Design Review application is based on the preliminary utility design only. Final civil engineering of the utility design may require changes to the site layout to accommodate the utilities.
Authority: BCC Title 24.02, 24.04, 24.06
Reviewer: Rob Hutchinson, Utilities, 425/452-7903

6. UTILITY CODES & ENGINEERING STANDARDS
The water, sewer, and storm drainage systems shall be designed per the current City of Bellevue Utility Codes and Utility Engineering Standards. Utilities Department design review, plan approval, and field inspection is performed under the Developer Extension Agreement and Utilities Permit Processes.
Authority: BCC Title 24.02, 24.04, 24.06
Reviewer: Rob Hutchinson, Utilities, 425/452-7903

B. PRIOR TO CLEARING & GRADING PERMIT: The following conditions are imposed to ensure compliance with the relevant decision criteria and Code requirements and to mitigate adverse environmental impacts not addressed through applicable Code provisions. These conditions must be complied with on plans submitted with the <u>Clearing & Grading or Demolition permit application</u>:

1. RIGHT-OF-WAY USE PERMIT
Prior to issuance of any construction or clearing and grading permit, the applicant shall secure applicable right-of-way use permits from the City's Transportation Department, which may include:

a) Designated truck hauling routes.
b) Truck loading/unloading activities.
c) Location of construction fences.
d) Hours of construction and hauling.
e) Requirements for leasing of right of way or pedestrian easements.
f) Provisions for street sweeping, excavation and construction.
g) Location of construction signing and pedestrian detour routes.
h) All other construction activities as they affect the public street system.

In addition, the applicant shall submit for review and approval a plan for providing pedestrian access during construction of this project. Access shall be provided at all times during the construction process, except when construction activities such as shoring, foundation work, and construction of frontage improvements prevents access. General materials storage and contractor convenience are not reasons for preventing access.
The applicant will secure sufficient off-street parking for construction workers before the issuance of a clearing and grading, building, a foundation or demolition permit.
Authority: BCC 11.70 & 14.30
Reviewer: Ron Kessack, Transportation, 425/452-4631

2. CIVIL ENGINEERING PLANS – TRANSPORTATION
Civil engineering plans produced by a qualified engineer must be approved by the Transportation Department prior to issuance of the clearing and grading permit. The design of all street frontage improvements and driveway accesses must be in conformance with the requirements of the Americans with Disabilities Act, the Transportation Development Code, the provisions of the Transportation Department Design Manual, and specific requirements stated elsewhere in this document. All relevant standard drawings from the Transportation Department Design Manual shall be copied exactly into the final engineering plans. Requirements for the engineering plans include, but are not limited to:

a) Traffic signs and markings.

b) Curb, gutter, sidewalk, and driveway approach design. (The engineering plans shall be the controlling document on the design of these features; architectural and landscape plans must conform to the engineering plans as needed.)

c) Handicapped ramps, crosswalk revisions, and crosswalk equipment such as pushbuttons.

d) Sight distance. (Show the required vehicular and pedestrian sight triangles and include any sight obstructions, including those off-site.). Vegetation and/or objects that block sight distance must be trimmed or removed or relocated to provide sight distance as per City Standards.

e) Location of fixed objects in the sidewalk or near the driveway approach.

f) Trench restoration within any right of way or access easement.

Specific requirements are detailed below.

- Driveway aprons must be constructed in accordance with Design Manual Standard Drawing DEV-6.
- Vehicle and pedestrian sight distance must be provided per BCC 14.60.240 and 14.60.241. Sight distance triangles must be shown at all driveway locations and must consider all fixed objects and mature landscape vegetation. Vertical as well as horizontal line of sight must be considered when checking for sight distance.

Authority: BCC 14.60; Transportation Department Design Manual Sections 5, 21, and 22; and Transportation Department Design Manual Standard Drawings TE-1 and TE-3.
Reviewer: Rohini Nair, Transportation, 425/ 452-2569

C. PRIOR TO BUILDING PERMIT: The following conditions are required by City Code. Unless specified otherwise below, these conditions must be complied with on plans submitted with the Building permit application:

1. TRANSPORTATION IMPACT FEE
Payment of the transportation impact fee will be required at the time of building permit issuance and is based on the impact fee rate that is applicable at the time of issuance of the building permit. The current impact fee rate is $907 per multi family dwelling unit and the total impact fee is estimated to be $ 59,862. The transportation impact fee is subject to change and the fee schedule in effect at the time of building permit issuance will apply. The impact fee rate for multi-family development will increase on 1/1/2013 and 1/1/2016 to become $1,360 per dwelling unit and $2,266 per dwelling unit respectively.
Authority: BCC 22.16
Reviewer: Rohini Nair, Transportation, 425/ 452-2569

2. BUILDING AND SITE PLANS – TRANSPORTATION
Building plans, landscaping plans, and architectural site plans must accommodate on-site traffic markings and signs and driveway design as specified in the engineering plans. Building plans, landscaping plans, and architectural site plans must comply with vehicle and pedestrian sight distance requirements, as shown on the engineering plans.
Authority: BCC 14.60.060, 110, 120, 150, 180, 181, 190, 240, 241
Reviewer: Rohini Nair, Transportation, 425/ 452-2569

3. SPRINKLERS
Provide automatic fire sprinklers throughout the buildings designed per 2010 NFPA 13R.
Authority: IFC 903
Reviewer: Adrian Jones, Fire, 425/452-6032

4. FIRE DEPARTMENT CONNECTION
Provide a Fire Department connection at an approved location and within 50 feet of a fire hydrant.
Authority: IFC 903
Reviewer: Adrian Jones, Fire, 425/452-6032

5. ALARM NOTIFICATION SYSTEM
Provide an alarm notification system for the building.
Authority: IFC 903.4
Reviewer: Adrian Jones, Fire, 425/452-6032

6. FIRE HYDRANTS
Provide fire hydrants at approved locations.
Authority: IFC 507 & BCC Amendment 506
Reviewer: Adrian Jones, Fire, 425/452-6032

7. CARBON MONOXIDE ALARMS
Install carbon monoxide alarms, which will be required for all new construction by July 1, 2011.
Authority: IFC 907.2.8.4.1
Reviewer: Adrian Jones, Fire, 425/452-6032

D. PRIOR TO TCO: The following conditions are required by City Code and supported by City Policy. These conditions shall be complied with <u>prior to issuance of the Temporary Certificate of Occupancy (TCO)</u>:

1. LANDSCAPE INSTALLATION ASSURANCE DEVICE

All site landscaping shall be 100% complete per the plan approved by the City. Alternatively, the applicant shall submit the following to the Land Use Division: 1) a red-marked plan identifying which landscape areas are incomplete; 2) an estimate for the total cost to complete these areas; and 3) a notarized Assignment of Savings dedicated to the City for 150% of the estimated cost to complete these areas per the approved Landscape Plan.

Authority: LUC 20.40.490
Reviewer: Mike Upston, Land Use, 425/452-2970

2. LANDSCAPE MAINTENANCE ASSURANCE DEVICE

The applicant shall file with the Land Use Division a landscape maintenance assurance device for a one-year period; provide an assignment of savings or letter of credit for 20% of the cost of labor and materials for all required landscaping.

Authority: LUC 20.40.490
Reviewer: Mike Upston, Land Use, 425/452-2970

3. STREET FRONTAGE IMPROVEMENTS

All street frontage improvements, including driveway modification and ADA compliancy of the sidewalk, must be completed by the applicant and accepted by the City Inspector. All required improvements must be constructed as per the approved plans or as per direction of the Transportation Department inspector. Bonding or other types of assurance devices will not be accepted in lieu of construction.

Authority: BCC 14.60; Transportation Department Design Manual Sections 14; and Transportation Department Design Manual Standard Drawings TE-1 and TE-3.
Reviewer: Rohini Nair, Transportation, 425/ 452-2569

4. PAVEMENT RESTORATION

Pavement restoration associated with street frontage improvements or to repair damaged street surfaces shall be provided as follows:

140th Avenue NE: Based on this street's excellent condition, it is classified with the City's overlay program as "Overlay Required." Street cutting is permitted only with extraordinary pavement restoration. Pavement restoration may include a half-street or full-street (depending on the extent of street cuts or damage) grind and overlay will be required and will be specified in the right of way use permit and/or field specified by the transportation inspector.

Authority: BCC 14.60. 250; Design Manual Design Standard #21
Reviewer: Ron Kessack, Transportation, 425/ 452-4631

Project Team

Owner's Agent
Michael Alford
Saltaire Craftsman
1518 1st Avenue South
Seattle, WA 98134
(206) 583-0611, fax (206) 583-8998
malford@saltaire.com

Architect
Rick Anderson AIA
935 Daley Street
Edmonds, WA 98020
(425) 405-5285, fax (425) 902-5285
rick@rickandersonarchitects.com

Landscape Architect
Richard Ward Assoc.
275 118th Ave SE #208
Bellevue, WA 98005-3538
(425) 453-1165
rwal1906@juno.com

Civil Engineer & Surveyor
Bob Schildgen
Dowl HKM
8420 154th Ave NE
Redmond, WA 98052
(425) 869-2670, fax (425) 869-2679
rschildgen@dowlhkm.com

Structural Engineer
Charlie Griffes
C T Engineering
180 Nickerson Street, Ste. 302
Seattle, WA 98109
(206) 285-4512, fax (206) 285-0618
charlie@ctengineering.com

Project Data

Unit Type	Variation	Description	Quantity	Sq. Ft.	Total Sq. Ft.
A	Typical	West Unit 2 Bedroom	4	940	3760
A	Type A		1	935	935
A	Type B		1	940	940
B	Typical	1 Bedroom WIC	12	612	7344
B	Type A		1	607	607
B	Type B		7	612	4284
B	Bump Out		4	628	2512
C	Typical	1 Bedroom	12	596	7152
C	Type B		6	596	3576
D	Typical	Narrow 1 Bedroom	2	526	1052
D	Type B		2	526	1052
D	Bump Out		2	545	1090
E	Typical	Middle Unit 2 Bedroom	2	944	1888
E	Type B		2	944	1888
E	Bump Out		2	965	1930
F	Typical	East Unit 2 Bedroom	4	928	3712
F	Type B		2	928	1856
Total:			66		45578

Building Code Criteria

1. Codes: 2006 SRC & SBC, WAC 51-30-11 Accessibility
2. Construction Type: V-B
3. Occupancy: R3, U
4. Number of Stories: 3
5. Sprinkler: No
6. Standpipes: No
7. Fire Alarm System: Throughout
8. Area Separation Walls: None

Drawing Index

A0.1 Cover Sheet
A0.2 Land Use Analysis
A0.3 Land Use Analysis
A1.1 Overall Site Plan
A1.2 Development Area Site Plan
A1.3 Detail Site Plan - Site Sections
A2.1 South Building First Floor Plan
A2.2 South Building Second Floor Plan
A2.3 South Building Third Floor Plan
A2.4 North Building First Floor Plan
A2.5 North Building Second Floor Plan
A2.6 North Building Third Floor Plan
A3.1 Elevations
A3.2 Elevations
A3.3 Elevations
A4.1 Building Sections

L1.1 Planting Plan
L1.2 Plant Schedule

C1.0 Cover Sheet
C1.1 Project General Notes
C2.0 Existing Site Boundary
C2.1 Existing Site Conditions
C5.0 Site Plan B
C6.0 Grading and Drainage Plan

6169 REGISTERED ARCHITECT
RICHARD C. ANDERSON JR.
STATE OF WASHINGTON

COVER SHEET

REVISIONS

Mark	Date	Description

WOODLAND COMMONS
APARTMENTS
13906 NE 9TH PLACE

RICK ANDERSON, ARCHITECT
F O R M A I N U T I L I T A T A S I T
ARCHITECTURE
PLANNING
LAND USE CONSULTING
935 Daley Street • Edmonds • Washington • 98020 • (425) 778-2085

A0.1

Project No: 0918
Date: 10/28/2010

0918-A0.1 COVER SHEET.DWG

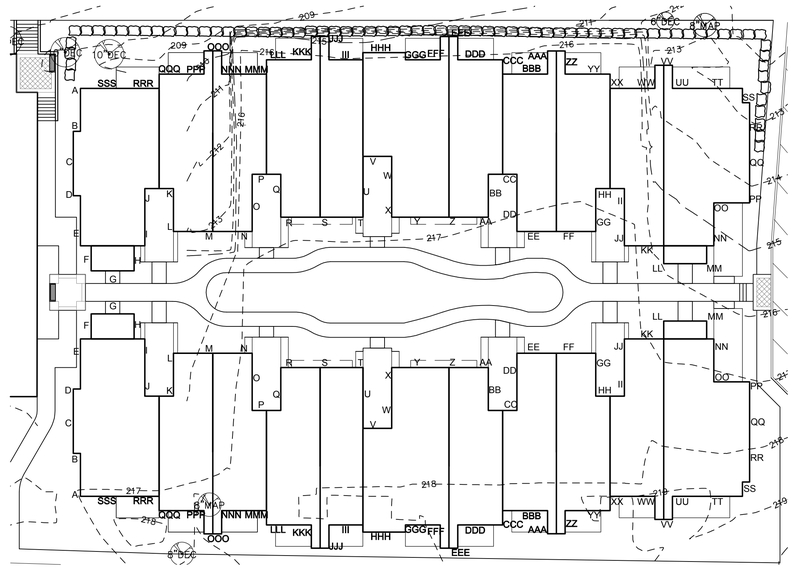

BUILDING HEIGHT DIAGRAM

1" = 20'

South Building Height Calculations

A through SSS all grades are 218'

218' average grade

Highest Midpoint of Pitch Allowable: 258'
Highest Midpoint of Actual Pitch: 251.18'
Highest ridge: 257.77'

North Building Height Calculations

A-216.66', B-217.08', C-217.42', D217.85', E through OO all grades are 218' (=8066'), PP-217.96', QQ-217.52', RR-217.09', SS-216.71', TT through RRR all grades are 216' (=5400'), SSS-216.66'
Total: 15420.95/71= 217.19'

217.19' average grade

Highest Midpoint of Pitch Allowable: 257.19
Highest Midpoint of Actual Pitch: 251.19'
Highest ridge: 257.77'

Site Information

Parcel No. 2725059175
Legal Description: SE 1/4 of SW 1/4 Less 893.10 Feet of W 970.10 Less S 470 Feet thereof Less N 10 Feet Thereof Less County Road
Address: 13600 NE 11th Street

Project Description

The project consists of 2- 33 unit buildings with 3 stories each. The buildings are located in an existing apartment development with 236 existing units in 25 existing buildings.

Allowable Density

Lot Area
- R20 Zoning - 389,863 SF = 179 units allowable
- R30 Zoning - 277,041 SF = 190 units allowable
- Allowable - 666,903 SF = 369 units allowable

Existing Units
- R20 Zoning - 156 units
- R30 Zoning - 80 units

Proposed Units
- R30 Zoning - 66 units

Total Units 302 units

6169 REGISTERED ARCHITECT
RICHARD C. ANDERSON JR.
STATE OF WASHINGTON

LAND USE ANALYSIS

Mark	Date	REVISIONS Description

WOODLAND COMMONS
APARTMENTS
13906 NE 9TH PLACE

RICK ANDERSON, ARCHITECT
F O R M A I N U T I L I T A T A S I T
ARCHITECTURE
PLANNING
LAND USE CONSULTING
935 Daley Street • Edmonds • Washington • 98020 • (425) 778-2085

A0.2

Project No: 0918
Date: 10/28/2010

0918-A0.2 LAND USE ANALYSIS.DWG

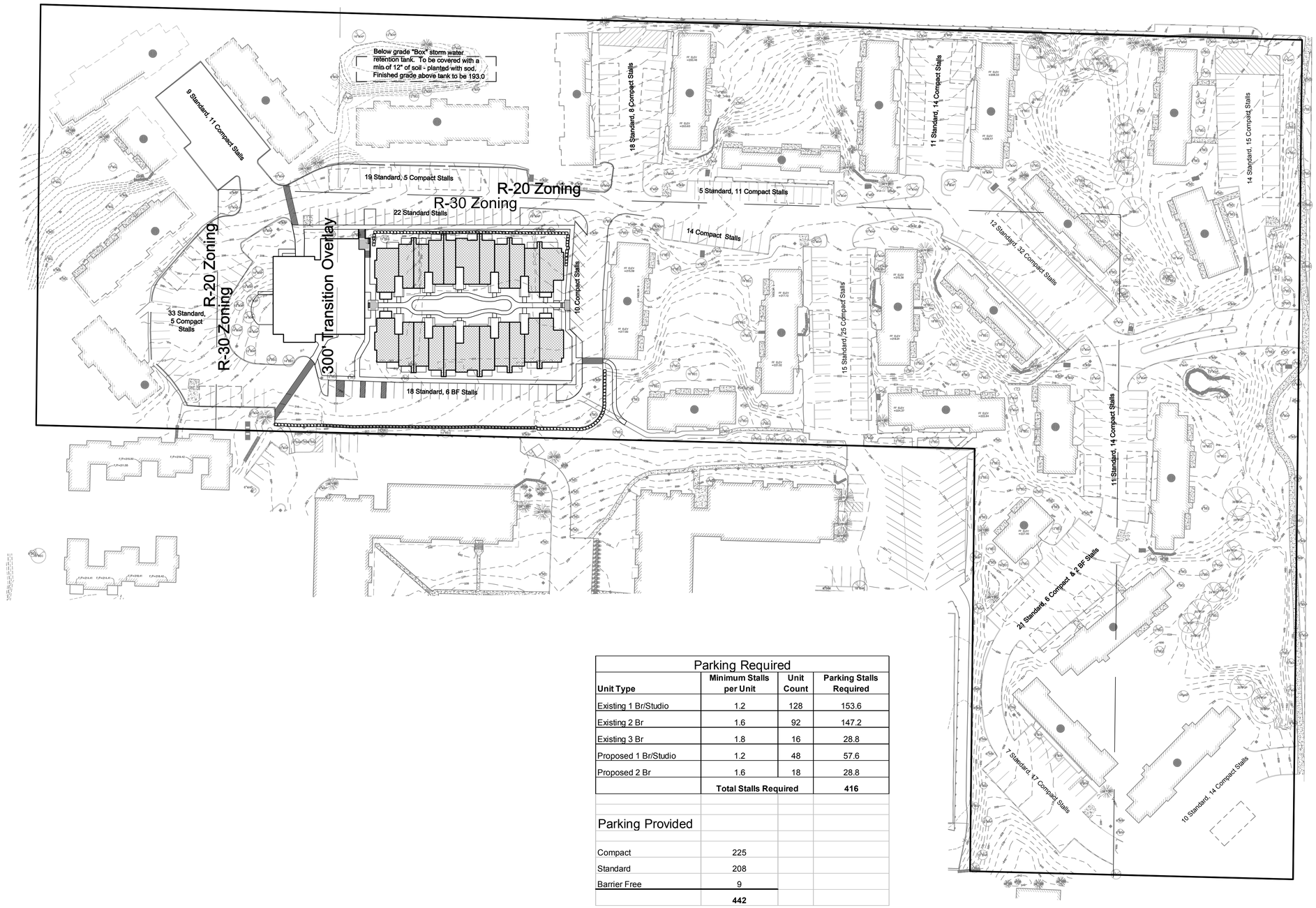

Parking Required			
Unit Type	**Minimum Stalls per Unit**	**Unit Count**	**Parking Stalls Required**
Existing 1 Br/Studio	1.2	128	153.6
Existing 2 Br	1.6	92	147.2
Existing 3 Br	1.8	16	28.8
Proposed 1 Br/Studio	1.2	48	57.6
Proposed 2 Br	1.6	18	28.8
	Total Stalls Required		**416**

Parking Provided	
Compact	225
Standard	208
Barrier Free	9
	442

PARKING LAYOUT

1" = 50'-0"

6169 REGISTERED ARCHITECT
RICHARD C. ANDERSON JR.
STATE OF WASHINGTON

PARKING CALCULATION

REVISIONS

Mark	Date	Description

WOODLAND COMMONS
APARTMENTS
13906 NE 9TH PLACE

RICK ANDERSON, ARCHITECT
F O R M A I N U T I L I T A T A S I T
ARCHITECTURE
PLANNING
LAND USE CONSULTING
935 Daley Street • Edmonds • Washington • 98020 • (425) 778-2085

A0.3

Project No: 0918

Date: 10/28/2010

0918-A0.3 PARKING CALCULATION.DWG

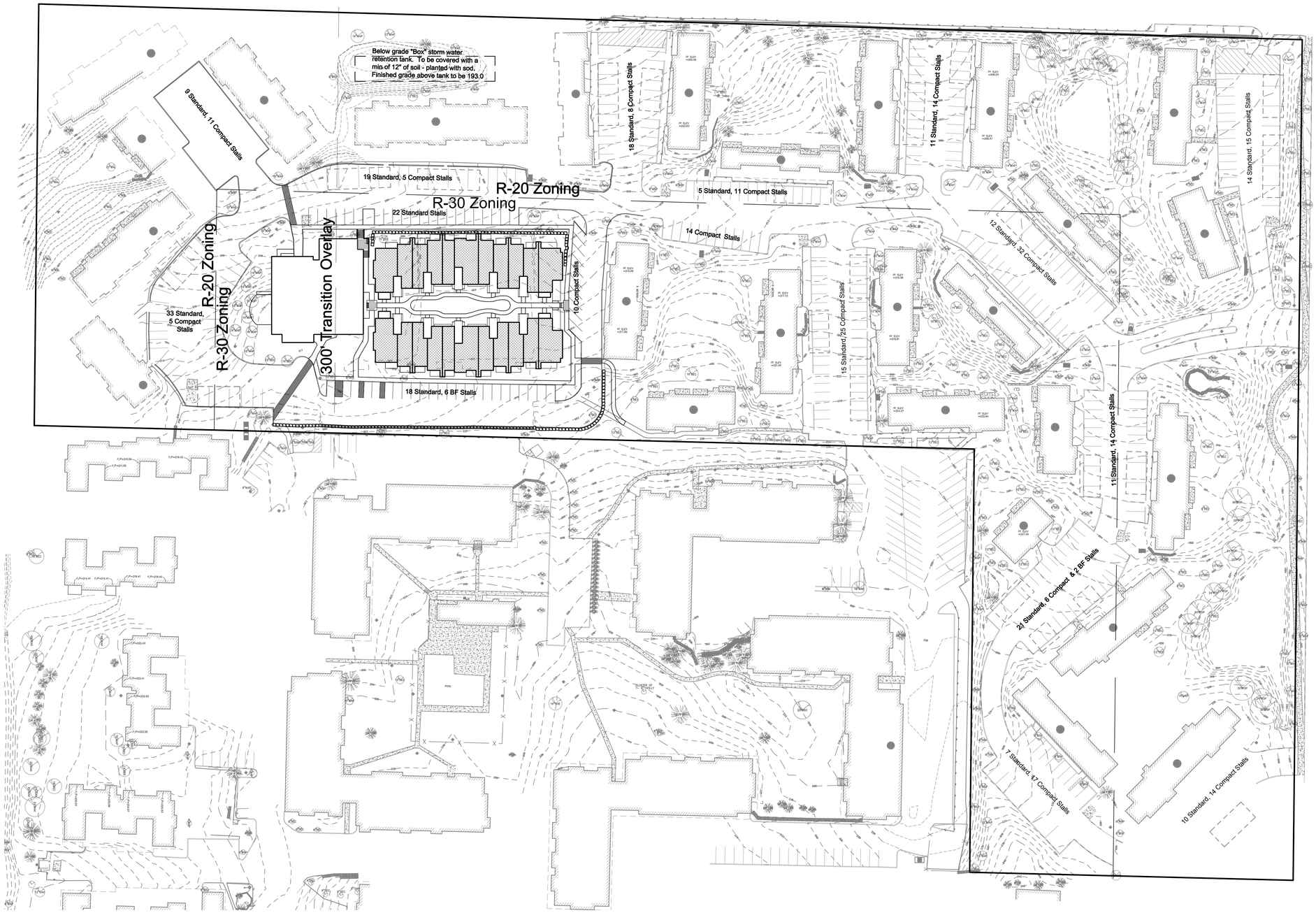

FULL SITE PLAN

1" = 50'-0"

REGISTERED ARCHITECT
6169
RICHARD C. ANDERSON JR.
STATE OF WASHINGTON

FULL SITE PLAN

REVISIONS

Mark	Date	Description

WOODLAND COMMONS
APARTMENTS
13906 NE 9TH PLACE

RICK ANDERSON, ARCHITECT
F O R M A I N U T I L I T A T A S I T
ARCHITECTURE
PLANNING
LAND USE CONSULTING
935 Daley Street • Edmonds • Washington • 98020 • (425) 778-2085

A1.1

Project No: 0918

Date: 10/28/2010

0918-A1.1 FULL SITE PLAN.DWG

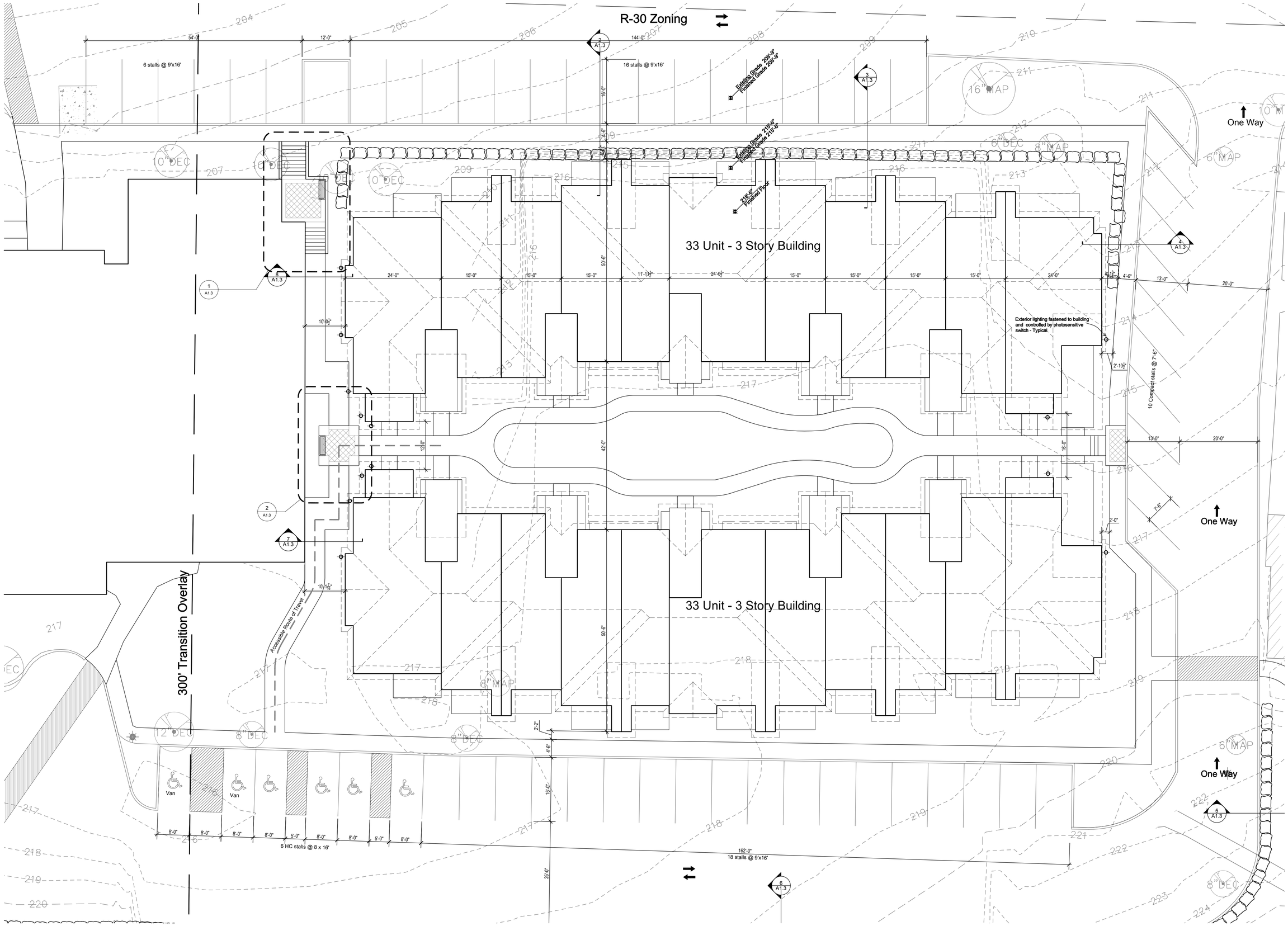

REGISTERED ARCHITECT
6169
RICHARD C. ANDERSON JR.
STATE OF WASHINGTON

DETAIL SITE PLAN

REVISIONS

Mark	Date	Description

WOODLAND COMMONS
APARTMENTS
13906 NE 9TH PLACE

RICK ANDERSON, ARCHITECT
FORMA IN UTILITATA SIT
ARCHITECTURE
PLANNING
LAND USE CONSULTING
935 Daley Street • Edmonds • Washington • 98020 • (425) 778-2085

A1.2

Project No: 0918
Date: 10/28/2010

0918-A1.2 DETAIL SITE PLAN.DWG

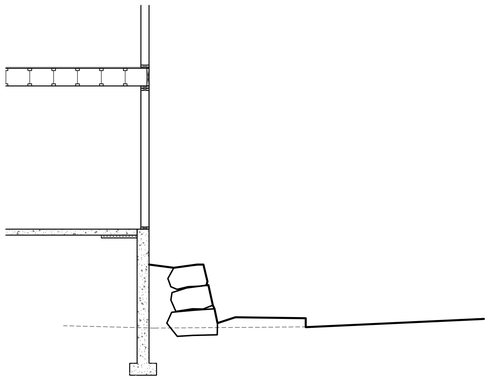

4 SITE SECTION 3
1/4" = 1'-0"

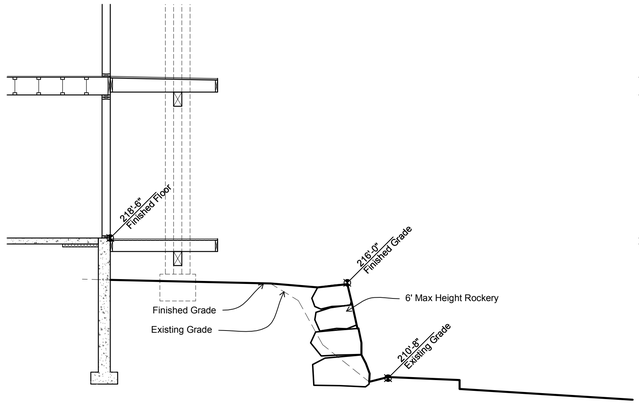

3 SITE SECTION 2
1/4" = 1'-0"

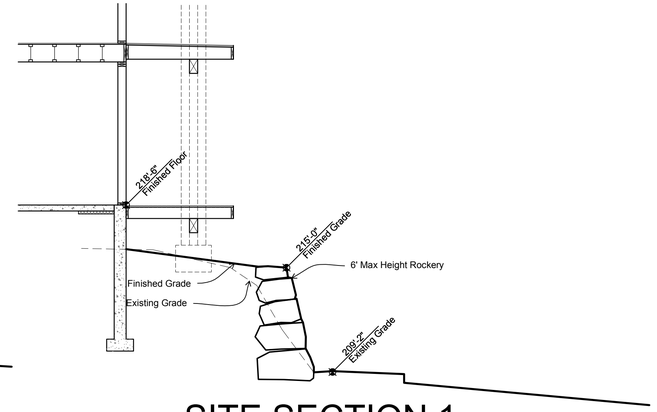

2 SITE SECTION 1
1/4" = 1'-0"

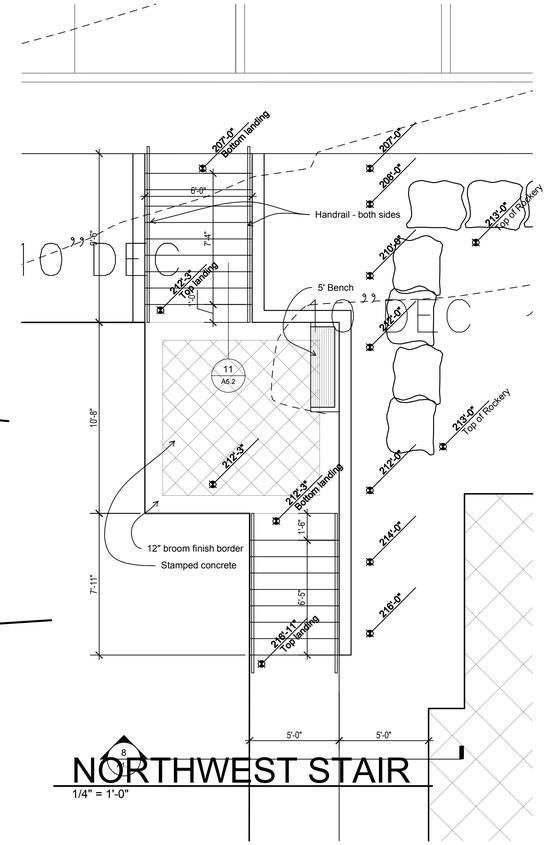

NORTHWEST STAIR
1/4" = 1'-0"

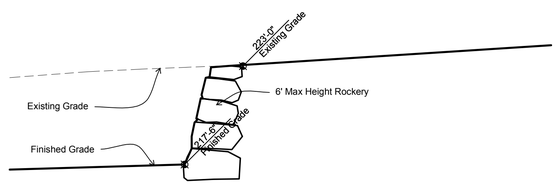

5 SITE SECTION 4
1/4" = 1'-0"

6 SITE SECTION 5
1/4" = 1'-0"

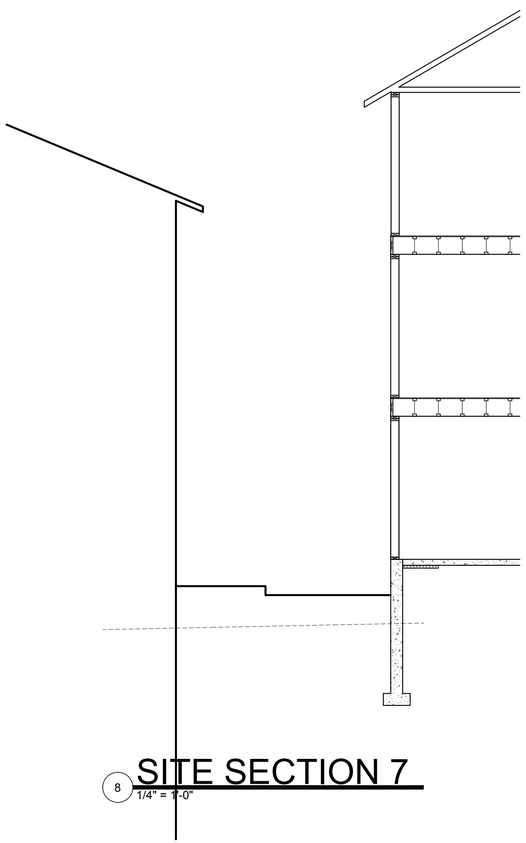

8 SITE SECTION 7
1/4" = 1'-0"

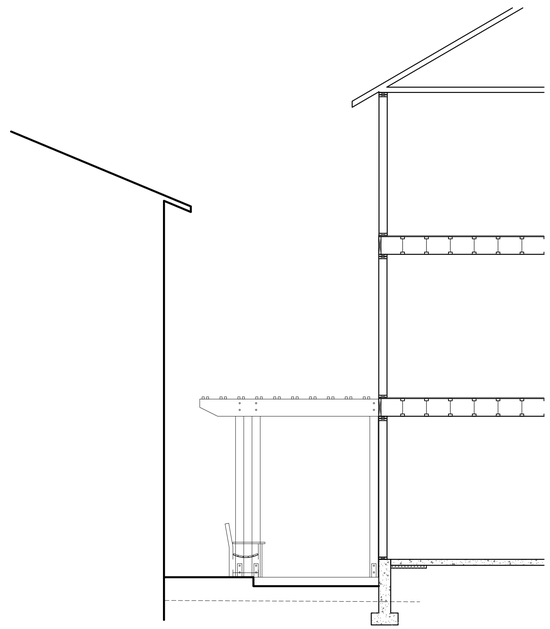

7 SITE SECTION 6
1/4" = 1'-0"

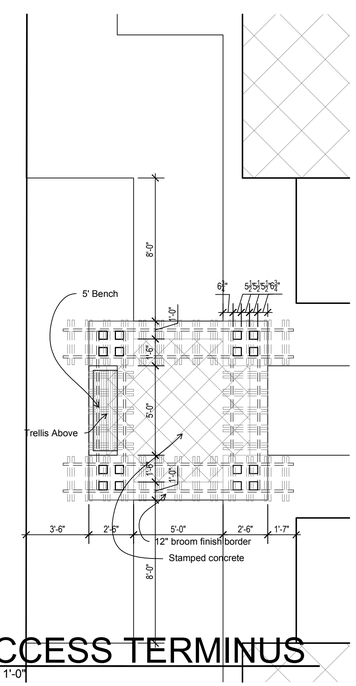

ACCESS TERMINUS
1/4" = 1'-0"

REGISTERED ARCHITECT
6169
RICHARD C. ANDERSON JR.
STATE OF WASHINGTON

DETAIL SITE PLAN

REVISIONS

Mark	Date	Description

WOODLAND COMMONS APARTMENTS
13906 NE 9TH PLACE

RICK ANDERSON, ARCHITECT
F O R M A I N U T I L I T A T A S I T
ARCHITECTURE
PLANNING
LAND USE CONSULTING
935 Daley Street • Edmonds • Washington • 98020 • (425) 778-2085

A1.3

Project No: 0918
Date: 10/28/2010

0918-A1.3 DETAIL SITE PLAN.DWG

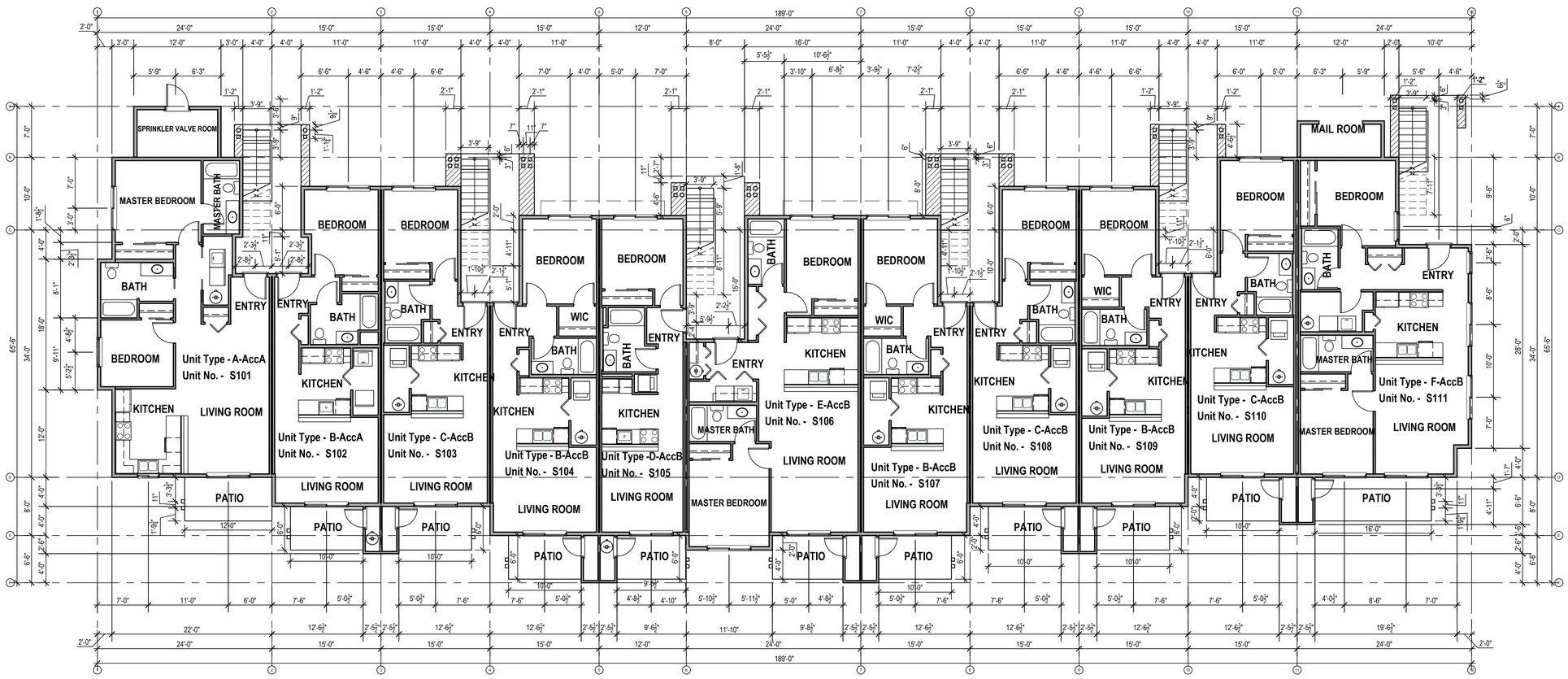

SOUTH BUILDING FIRST FLOOR PLAN

1/8" = 1'-0"

6169 REGISTERED ARCHITECT
RICHARD C. ANDERSON JR.
STATE OF WASHINGTON

FLOOR PLAN

REVISIONS

Mark	Date	Description

WOODLAND COMMONS
APARTMENTS
13906 NE 9TH PLACE

RICK ANDERSON, ARCHITECT
F O R M A I N U T I L I T A T A S I T
ARCHITECTURE
PLANNING
LAND USE CONSULTING
935 Daley Street • Edmonds • Washington • 98020 • (425) 778-2085

A2.1

Project No: 0918

Date: 10/28/2010

0918-A2.1 FLOOR PLAN.DWG

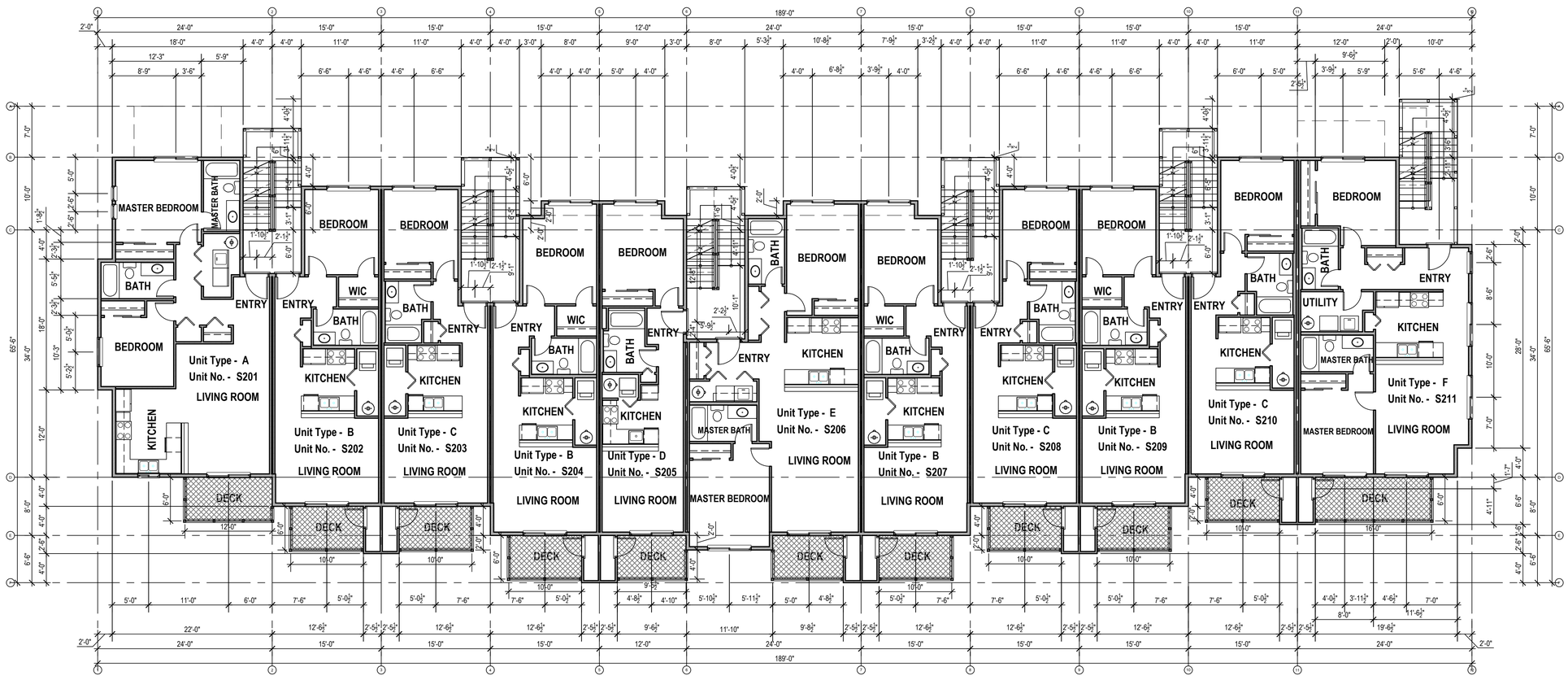

SOUTH BUILDING SECOND FLOOR PLAN

1/8" = 1'-0"

REGISTERED ARCHITECT
6169
RICHARD C. ANDERSON JR.
STATE OF WASHINGTON

FLOOR PLAN

REVISIONS

Mark	Date	Description

WOODLAND COMMONS
APARTMENTS
13906 NE 9TH PLACE

RICK ANDERSON, ARCHITECT
F O R M A I N U T I L I T A T A S I T
ARCHITECTURE
PLANNING
LAND USE CONSULTING
935 Daley Street • Edmonds • Washington • 98020 • (425) 778-2085

A2.2

Project No: 0918

Date: 10/28/2010

0918-A2.2 FLOOR PLAN.DWG

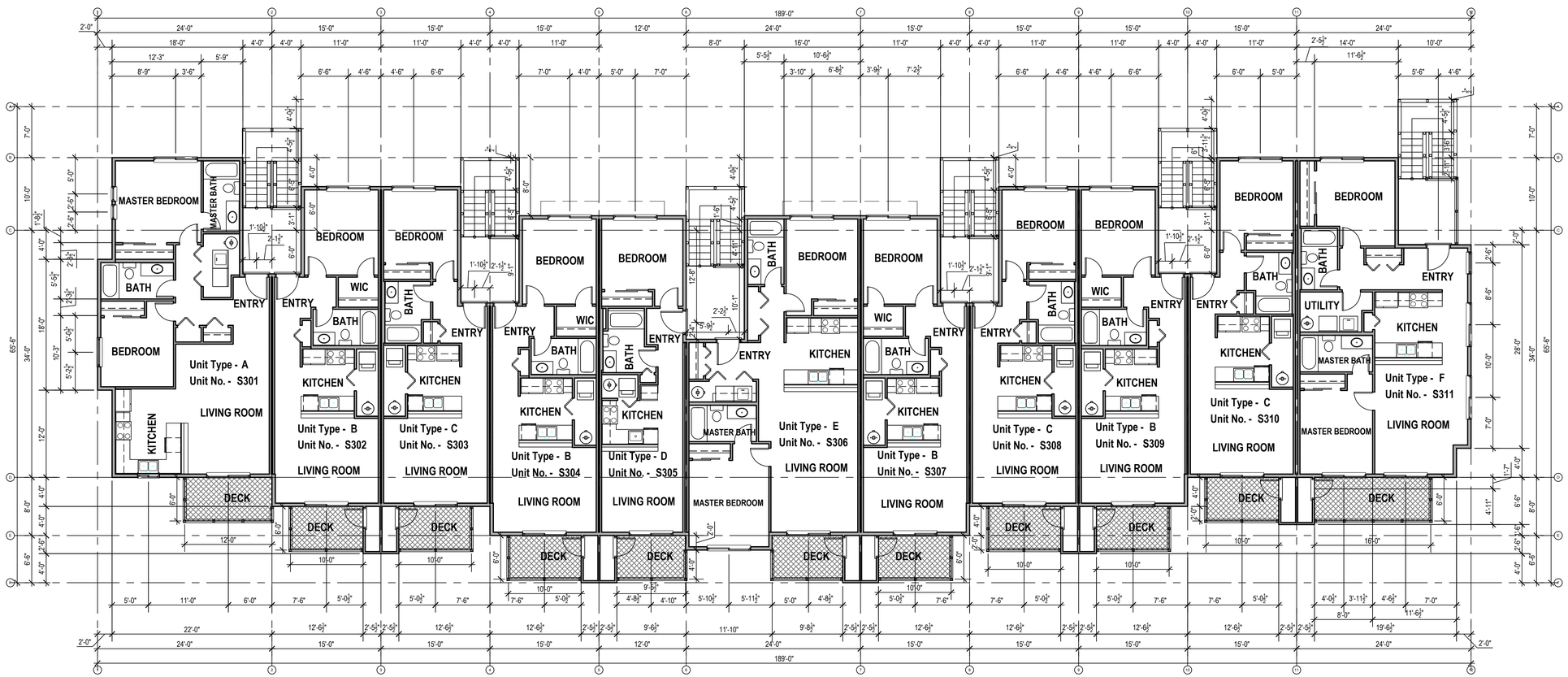

SOUTH BUILDING THIRD FLOOR PLAN

1/8" = 1'-0"

REGISTERED ARCHITECT
6169
RICHARD C. ANDERSON JR.
STATE OF WASHINGTON

FLOOR PLAN

REVISIONS

Mark	Date	Description

WOODLAND COMMONS
APARTMENTS
13906 NE 9TH PLACE

RICK ANDERSON, ARCHITECT
F O R M A I N U T I L I T A T A S I T
ARCHITECTURE
PLANNING
LAND USE CONSULTING
935 Daley Street • Edmonds • Washington • 98020 • (425) 778-2085

A2.3

Project No: 0918
Date: 10/28/2010

0918-A2.3 FLOOR PLAN.DWG

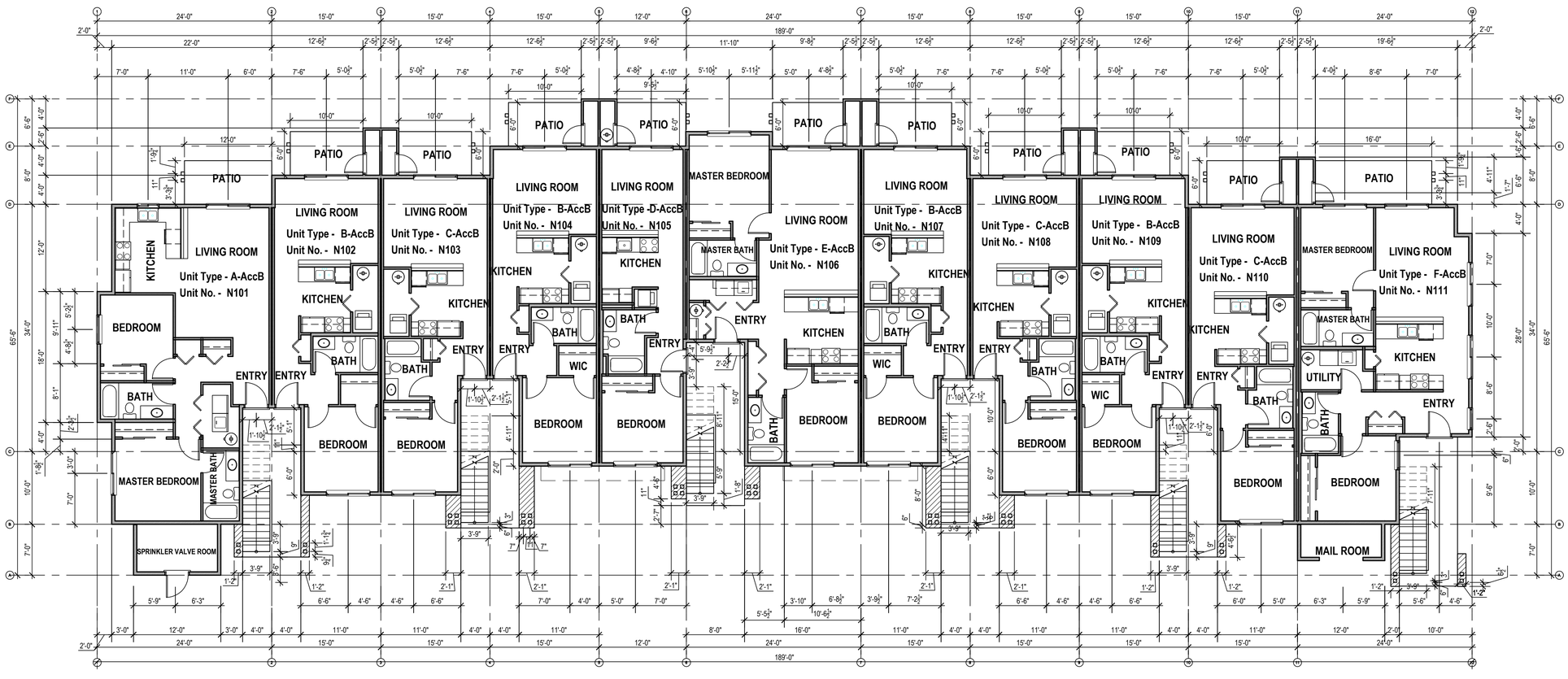

NORTH BUILDING FIRST FLOOR PLAN

1/8" = 1'-0"

REGISTERED ARCHITECT
6169
RICHARD C. ANDERSON JR.
STATE OF WASHINGTON

FLOOR PLAN

REVISIONS

Mark	Date	Description

WOODLAND COMMONS
APARTMENTS
13906 NE 9TH PLACE

RICK ANDERSON, ARCHITECT
FORMA IN UTILITATA SIT
ARCHITECTURE
PLANNING
LAND USE CONSULTING
935 Daley Street • Edmonds • Washington • 98020 • (425) 778-2085

A2.4

Project No: 0918

Date: 10/28/2010

0918-A2.4 FLOOR PLAN.DWG

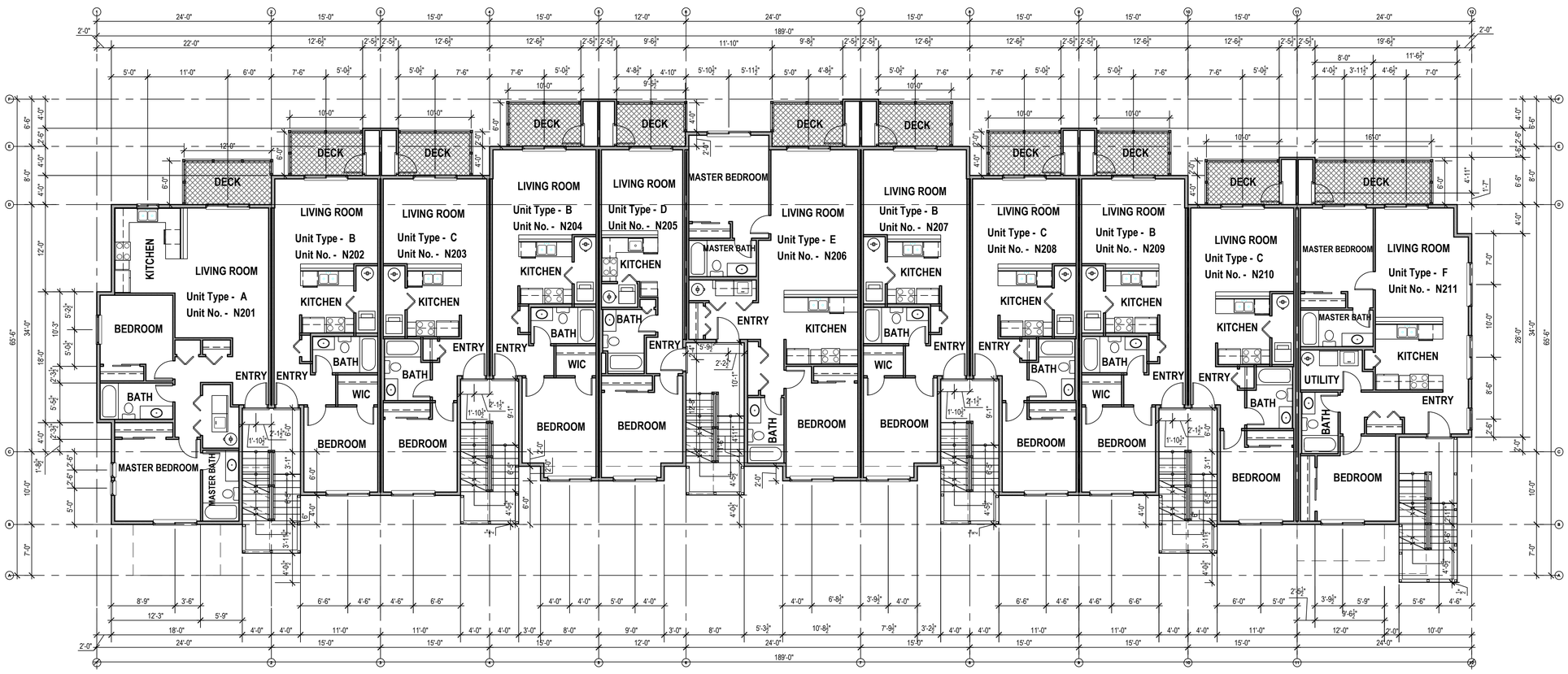

NORTH BUILDING SECOND FLOOR PLAN

1/8" = 1'-0"

6169 REGISTERED ARCHITECT
RICHARD C. ANDERSON JR.
STATE OF WASHINGTON

FLOOR PLAN

REVISIONS

Mark	Date	Description

WOODLAND COMMONS
APARTMENTS
13906 NE 9TH PLACE

RICK ANDERSON, ARCHITECT
F O R M A I N U T I L I T A T A S I T
ARCHITECTURE
PLANNING
LAND USE CONSULTING
935 Daley Street • Edmonds • Washington • 98020 • (425) 778-2085

A2.5

Project No: 0918
Date: 10/28/2010

0918-A2.5 FLOOR PLAN.DWG

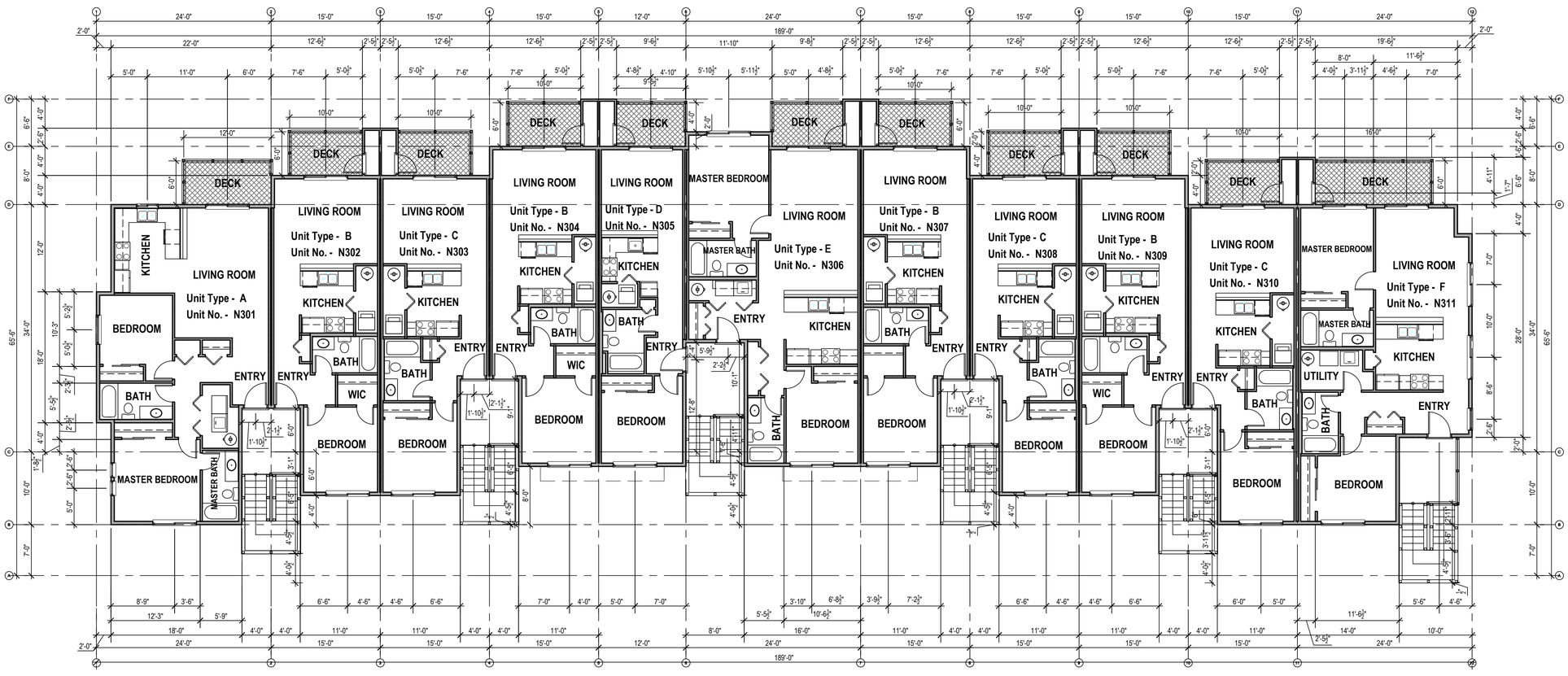

NORTH BUILDING THIRD FLOOR PLAN

1/8" = 1'-0"

REGISTERED ARCHITECT
6169
RICHARD C. ANDERSON JR.
STATE OF WASHINGTON

FLOOR PLAN

REVISIONS

Mark	Date	Description

WOODLAND COMMONS
APARTMENTS
13906 NE 9TH PLACE

RICK ANDERSON, ARCHITECT
F O R M A I N U T I L I T A T A S I T
ARCHITECTURE
PLANNING
LAND USE CONSULTING
935 Daley Street • Edmonds • Washington • 98020 • (425) 778-2085

A2.6

Project No: 0918

Date: 10/28/2010

0918-A2.6 FLOOR PLAN.DWG

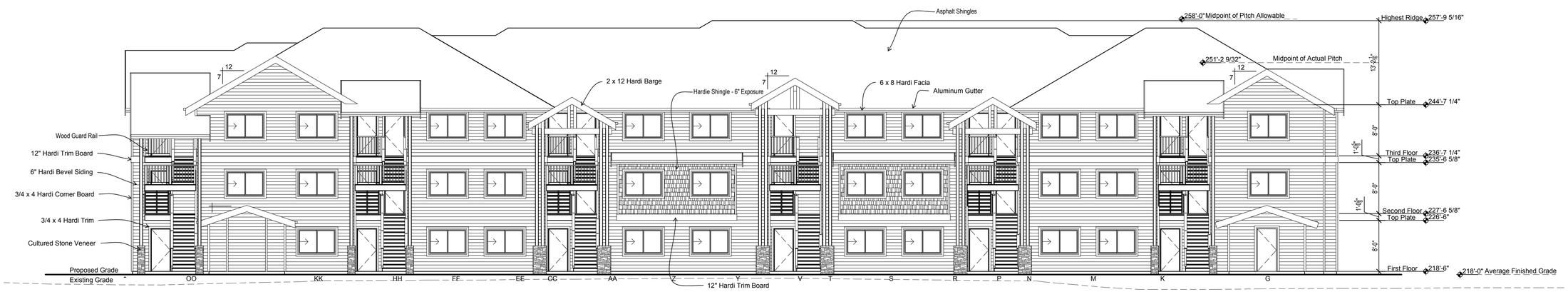

SOUTH BUILDING NORTH ELEVATION

1/8" = 1'-0"

SOUTH BUILDING SOUTH ELEVATION

1/8" = 1'-0"

6169 REGISTERED ARCHITECT
RICHARD C. ANDERSON JR.
STATE OF WASHINGTON

ELEVATIONS

REVISIONS

Mark	Date	Description

WOODLAND COMMONS
APARTMENTS
13906 NE 9TH PLACE

RICK ANDERSON, ARCHITECT
F O R M A I N U T I L I T A T A S I T
ARCHITECTURE
PLANNING
LAND USE CONSULTING
935 Daley Street • Edmonds • Washington • 98020 • (425) 778-2085

A3.1

Project No: 0918

Date: 10/28/2010

0918-A3.1 ELEVATIONS.DWG

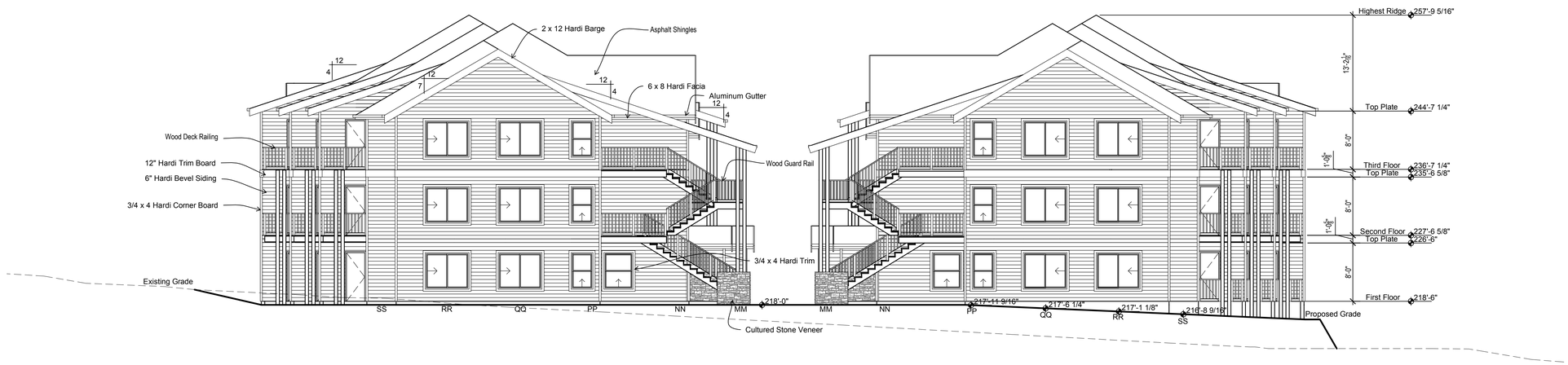

NORTH & SOUTH BLDG. EAST ELEVATION

1/8" = 1'-0"

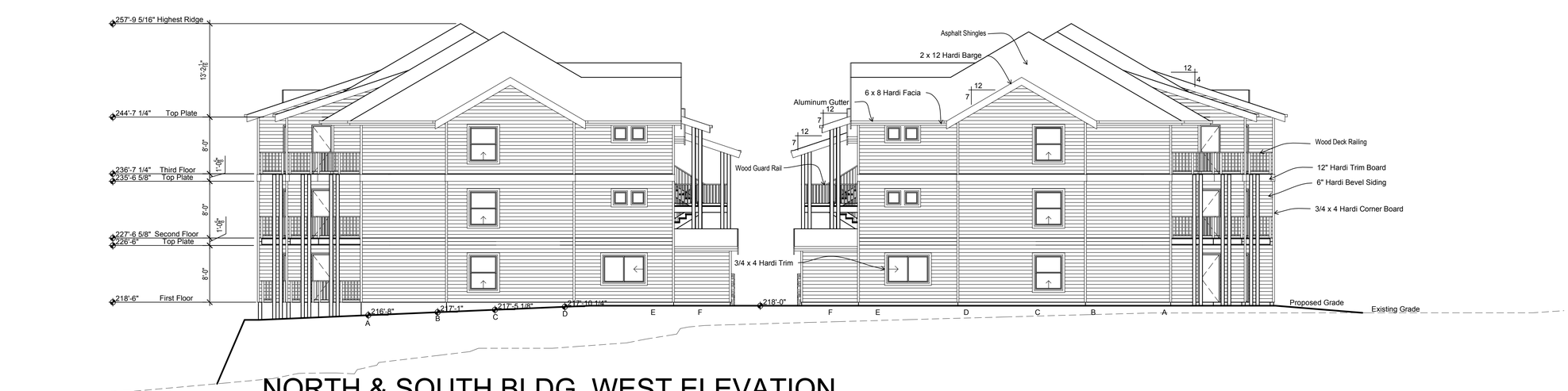

NORTH & SOUTH BLDG. WEST ELEVATION

1/8" = 1'-0"

6169 REGISTERED ARCHITECT
RICHARD C. ANDERSON JR.
STATE OF WASHINGTON

ELEVATIONS

REVISIONS

Mark	Date	Description

WOODLAND COMMONS
APARTMENTS
13906 NE 9TH PLACE

RICK ANDERSON, ARCHITECT
F O R M A I N U T I L I T A T A S I T
ARCHITECTURE
PLANNING
LAND USE CONSULTING
935 Daley Street • Edmonds • Washington • 98020 • (425) 778-2085

A3.2

Project No: 0918

Date: 10/28/2010

0918-A3.2 ELEVATIONS.DWG

NORTH BUILDING NORTH ELEVATION

1/8" = 1'-0"

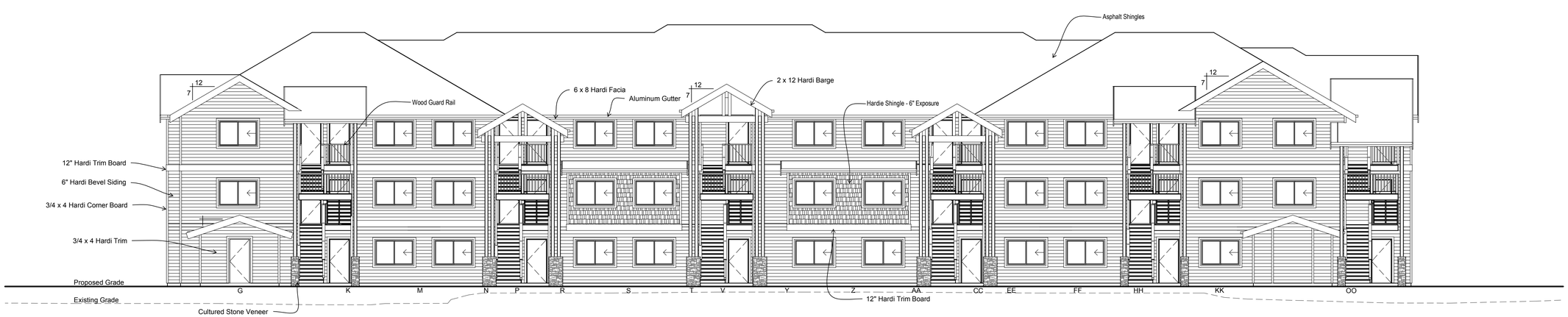

NORTH BUILDING SOUTH ELEVATION

1/8" = 1'-0"

REGISTERED ARCHITECT
6169
RICHARD C. ANDERSON JR.
STATE OF WASHINGTON

ELEVATIONS

REVISIONS

Mark	Date	Description

WOODLAND COMMONS
APARTMENTS
13906 NE 9TH PLACE

RICK ANDERSON, ARCHITECT
F O R M A I N U T I L I T A T A S I T
ARCHITECTURE
PLANNING
LAND USE CONSULTING
935 Daley Street • Edmonds • Washington • 98020 • (425) 778-2085

A3.3

Project No: 0918

Date: 10/28/2010

0918-A3.3 ELEVATIONS.DWG

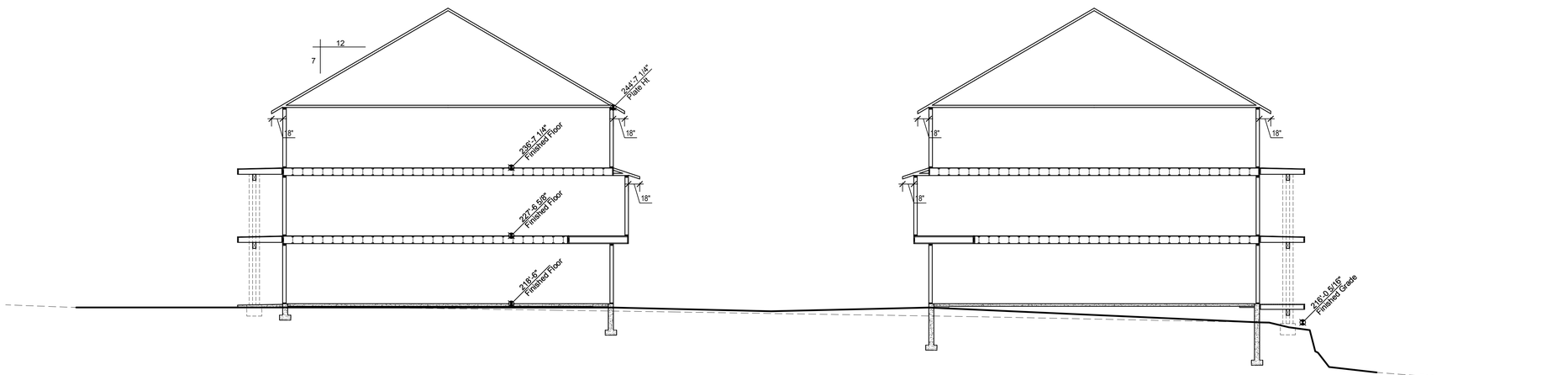

1 NORTH-SOUTH SITE SECTION
1/8" = 1'-0"

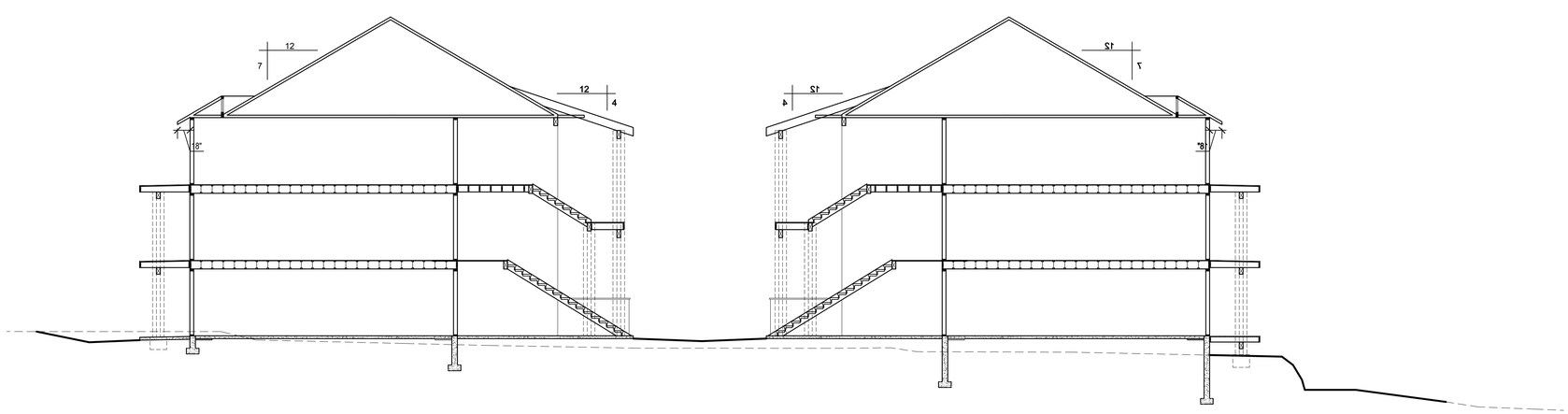

2 SECTION THROUGH ENTRY STAIRS
1/8" = 1'-0"

6169 REGISTERED ARCHITECT
RICHARD C. ANDERSON JR.
STATE OF WASHINGTON

BUILDING SECTIONS

REVISIONS

Mark	Date	Description

WOODLAND COMMONS
APARTMENTS
13906 NE 9TH PLACE

RICK ANDERSON, ARCHITECT
F O R M A I N U T I L I T A T A S I T
ARCHITECTURE
PLANNING
LAND USE CONSULTING
935 Daley Street • Edmonds • Washington • 98020 • (425) 778-2085

A4.1

Project No: 0918
Date: 10/28/2010

0918-A4.1 BUILDING SECTIONS.DWG

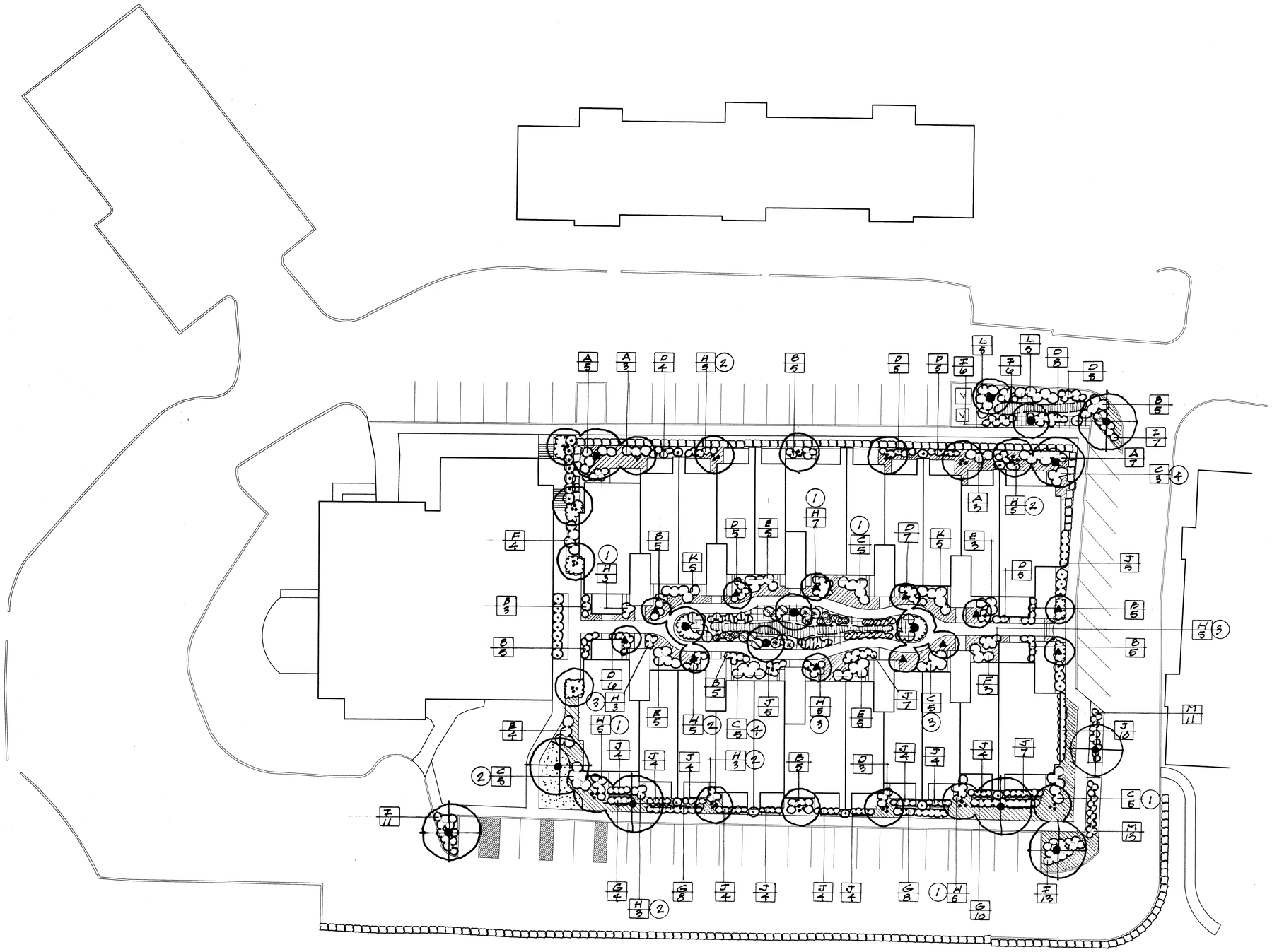

1" = 20'-0"

planting plan

STATE OF WASHINGTON REGISTERED LANDSCAPE ARCHITECT
RICHARD WARD
CERTIFICATE NO. 397

6169 REGISTERED ARCHITECT
RICHARD C. ANDERSON JR.
STATE OF WASHINGTON

SITE PLAN

REVISIONS

Mark	Date	Description

WOODLAND COMMONS
APARTMENTS
13906 NE 9TH PLACE

RICK ANDERSON, ARCHITECT
FORMA IN UTILITATA SIT
ARCHITECTURE
PLANNING
LAND USE CONSULTING
935 Daley Street • Edmonds • Washington • 98020 • (425) 778-2085

L1.1

Project No:

Date: 10-29-10

0918-A1.1 SITE PLAN.DWG

PLANT SCHEDULE

SYMBOL	BOTANICAL NAME	COMMON NAME	SIZE	QUAN.	REMARKS
	acer rubrum 'armstrong'	armstrong red maple	2" cal	2	b&b
	acer rubrum	red maple	2" cal	6	b&b
	betula nigra	river birch	8'-10' ht	6	multi-stem b&b
	prunus x hillieri 'spire'	spire cherry	2" cal	12	b&b
	acer circinatum	vine maple	10'-12' ht	14	5-cane min / clump b&b
A	cotoneaster buxifolius	cotoneaster	5-gal	13	container
B	cornus stolonifera 'Kelseyi'	dwarf red twig dogwood	2-gal	43	container
C	rhododendron: 1 pjm 2 Vulcan 3 Yaku nasahear 4 unique	rhododendron	18"-24"	28	container / b&b
D	berberis thunbergii 'rose glow'	rose glow barberry	5-gal	53	container
E	pieris japonica 'bert chandler'	andromeda	5-gal	22	
F	hydrangea macroptylla 'glowing embers'	hydrangea	5-gal	7	
G	euonymous japonica 'silver princess'	euonymous	2-gal	30	
H	azalea: 1-hino crimson 2-pink gumpo 3-everest	azalea	1-gal	49	
I	prunus laurocerasus 'otto luyken'	otto luyken laurel	5-gal.	43	
J	nandina domestica 'woods dwarf'	heavenly bamboo	2-gal	74	
K	hibiscus syriacus 'collie mullens'	rose of sharon	3-gal	10	
L	cornus stolonifera	red twig dogwood	3-gal	10	
M	cornus stolonifera 'kelseyi'	dwarf redtwig dogwood	2-gal	24	
	cornus alba 'argenteomarginata'	variegated tatarian dogwood	3-gal	10	
	sambucus nigra 'eva'	purple elderberry	5-gal	6	
	pennisetum alopecuroides	fountain grass	5-gal	6	
	polystichum munitum	sword fern	1-gal	12	
	helictotrichon sempervirens	blue oat grass	1-gal	14	
	vaccinium ovatum	evergreen huckleberry	5-gal	10	container
	thuja occidentalis	arborvitea	5'-6' ht	20	b&b
	calluna vulgaris 'david eason'	heather	1-gal		plant @ 24" o.c.
	arctostaphylos uva-ursi	kinnickinnick	4" pots		plant @ 18" o.c.
	vinca minor	perriwinkle	4" pots		plant @ 18" o.c.
	gaultheria shallon	salal	4" pots		plant @ 18" o.c.
	sodded lawn				
	rain garden planting each area to recieve the following installed as per direction of landscape architect				
	carex obnupta	slough sedge	1-gal	25	each area
	juncus ensifolius	dagger leaf rush	1-gal	25	"
	scirpus microcarpus	small twisted bullrush	1-gal	25	"
	iris pseudacorus	yellow flag	1-gal	25	" 3 corms min / gallon

STATE OF WASHINGTON REGISTERED LANDSCAPE ARCHITECT
RICHARD WARD
CERTIFICATE NO. [illegible]

6169 REGISTERED ARCHITECT
RICHARD C. ANDERSON JR.
STATE OF WASHINGTON

SITE PLAN

REVISIONS

Mark	Date	Description

WOODLAND COMMONS
APARTMENTS
13906 NE 9TH PLACE

RICK ANDERSON, ARCHITECT
FORMA IN UTILITATA SIT
ARCHITECTURE
PLANNING
LAND USE CONSULTING
935 Daley Street • Edmonds • Washington • 98020 • (425) 778-2085

L1.2

Project No:

Date: 10·29·10

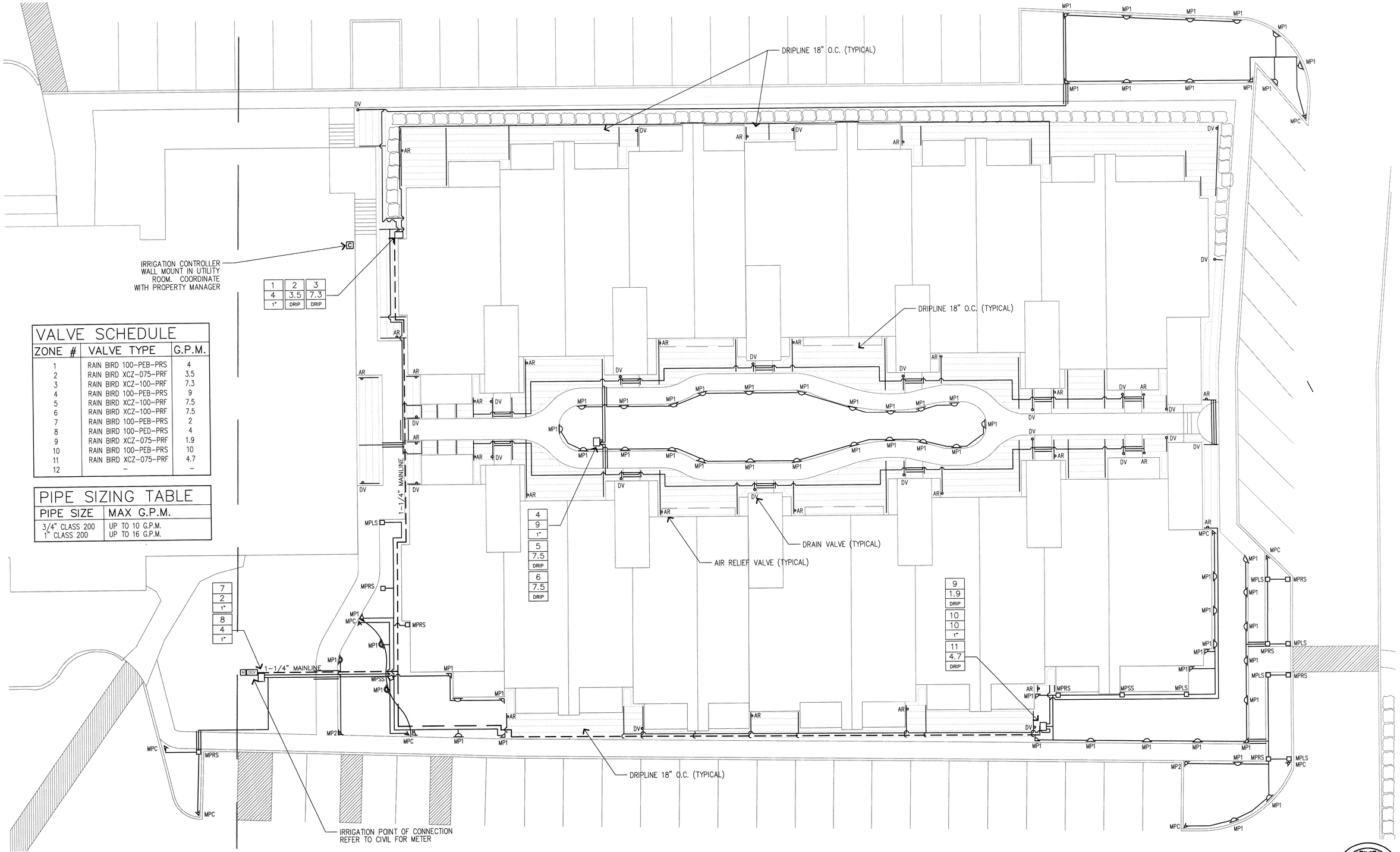

VALVE SCHEDULE

ZONE #	VALVE TYPE	G.P.M.
1	RAIN BIRD 100-PEB-PRS	4
2	RAIN BIRD XCZ-075-PRF	3.5
3	RAIN BIRD XCZ-100-PRF	7.3
4	RAIN BIRD 100-PEB-PRS	9
5	RAIN BIRD XCZ-100-PRF	7.5
6	RAIN BIRD XCZ-100-PRF	7.5
7	RAIN BIRD 100-PEB-PRS	2
8	RAIN BIRD 100-PED-PRS	4
9	RAIN BIRD XCZ-075-PRF	1.9
10	RAIN BIRD 100-PEB-PRS	10
11	RAIN BIRD XCZ-075-PRF	4.7
12	-	-

PIPE SIZING TABLE

PIPE SIZE	MAX G.P.M.
3/4" CLASS 200	UP TO 10 G.P.M.
1" CLASS 200	UP TO 16 G.P.M.

IRRIGATION PLAN

SCALE: 1" = 10' - 0"

0 5 10 20

RWA
RICHARD WARD ASSOCIATES
Landscape Architecture
Site Planning
Urban Design
275 - 118th Avenue SE Ste 208
Bellevue, Washington 98005
(206) 453-1165

STATE OF WASHINGTON REGISTERED LANDSCAPE ARCHITECT
RICHARD WARD
CERTIFICATE NO. 297

6169 REGISTERED ARCHITECT
RICHARD C. ANDERSON JR.
STATE OF WASHINGTON

IRRIGATION PLAN

REVISIONS

Mark	Date	Description

WOODLAND COMMONS
APARTMENTS
13906 NE 9TH PLACE

RICK ANDERSON, ARCHITECT
F O R M A I N U T I L I T A T A S I T
ARCHITECTURE
PLANNING
LAND USE CONSULTING
935 Daley Street • Edmonds • Washington • 98020 • (425) 778-2085

L2.1

Project No:

Date: 10/25/2010

WOODLAWN COMMONS_IRRIGATION_L-2_1.DWG

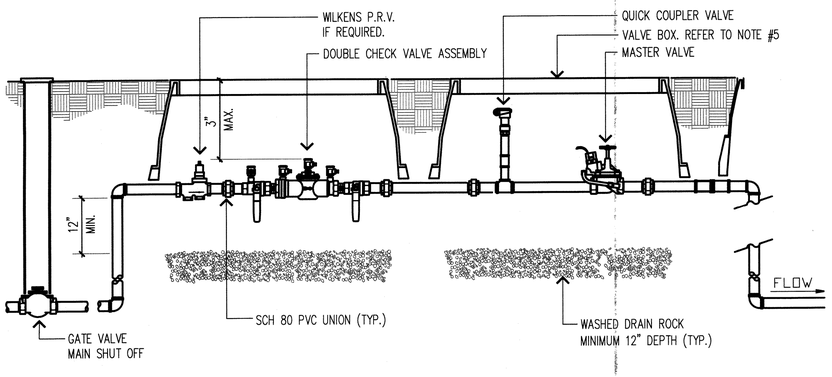

NOTE:
1. VALVE BOX SHALL NOT REST ON PIPES.
2. ALL PIPE AND FITTINGS WITHIN VAULT TO BE ONE SIZE LARGER THEN COMPONENTS. USE REDUCING BUSHINGS.
3. TEST COCKS SHALL HAVE 12" CLEARANCE.
4. INSTALLATION SHALL CONFORM WITH CITY OF BELLEVUE STANDARDS. REVIEW CURRENT CITY STANDARDS FOR REVISIONS
5. FOR 3/4" & 1" DEVICES, CARSON JUMBO BOXES FOR 1-1/2" & 2" DEVICES, INSTALL FOG TITE #2 REINFORCED CONCRETE BOXES

1 POINT OF CONNECTION
NOT TO SCALE

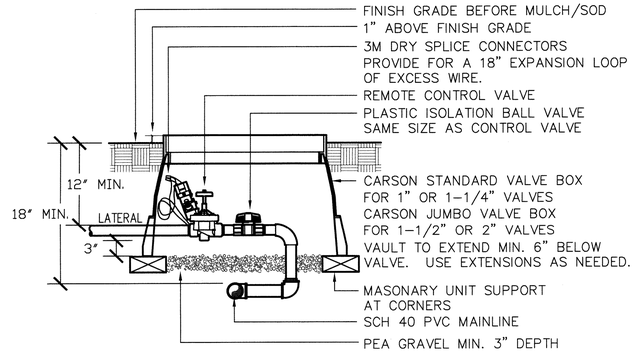

NOTES:
1. VALVE BOX SHALL NOT REST ON PIPES.
2. ALL PIPE AND FITTINGS WITHIN VAULT TO BE SCH 40 PVC SAME SIZE AS OUTLET LATERAL PIPE.
3. PROVIDE EXPANSION COILS AT EACH WIRE CONNECTION IN VALVE BOX.
4. COMPACT SOIL AROUND VALVE BOX TO SAME DENSITY AS UNDISTURBED ADJACENT SOIL.
5. VERIFY LOCATION OF VALVES WITH LANDSCAPE ARCHITECT BEFORE INSTALLATION. CLUSTER VALVES IN GROUPS OF THREE OR LESS.

2 AUTOMATIC VALVE
NOT TO SCALE

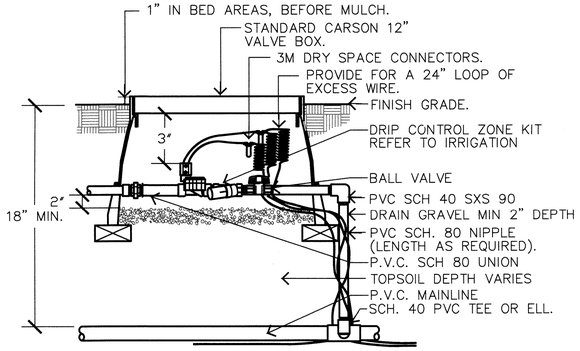

NOTES:
1. PROVIDE VALVE BOX EXTENSIONS AS REQUIRED.
2. SUPPORT VALVE BOX WITH (4) BRICKS.
3. TAPE CONTROL WIRES AND SPARE TO BOTTOM OF MAINLINE (TYPICAL).

3 DRIP CONTROL ZONE
NOT TO SCALE

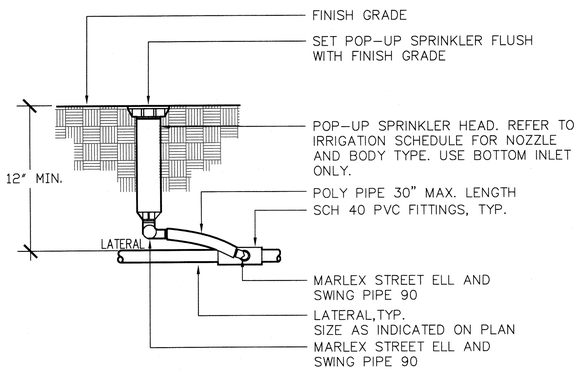

NOTE:
1. USE BOTTOM INLET ONLY.

4 POP-UP SPRINKLER
NOT TO SCALE

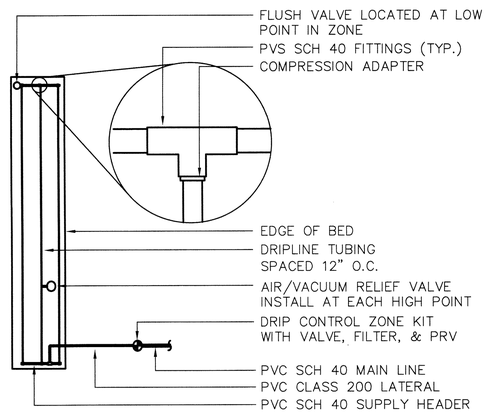

5 SCHEMATIC DRIPLINE LAYOUT
NOT TO SCALE

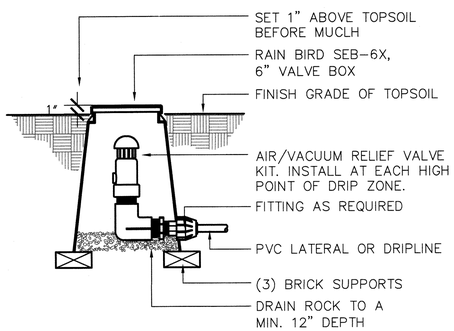

6 AIR/VACUUM RELIEF VALVE
NOT TO SCALE

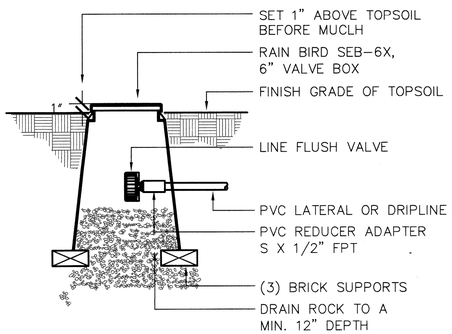

7 DRAIN VALVE
NOT TO SCALE

IRRIGATION SCHEDULE

SYMBOL	DESCRIPTION	P.S.I.	RAD.	G.P.M.
MP2	RAIN BIRD 1806-SAM-MP2000, 6" POP-UP ROTATOR	40	20'	0.74
MP2	RAIN BIRD 1806-SAM-MP2000, 6" POP-UP ROTATOR	40	20'	0.40
MP1	RAIN BIRD 1806-SAM-MP1000, 6" POP-UP ROTATOR	40	13.5'	0.37
MP1	RAIN BIRD 1806-SAM-MP1000, 6" POP-UP ROTATOR	40	13.5'	0.19
MPC	RAIN BIRD 1806-SAM-MPCORNER, 6" POP-UP ROTATOR	40	13.5'	0.19
MPSS	RAIN BIRD 1806-SAM-MP SIDE STRIP, 6" POP-UP ROTATOR	40	5.5X16'	0.44
MPRS	RAIN BIRD 1806-SAM-MP RIGHT STRIP, 6" POP-UP ROTATOR	40	5.5X16'	0.22
MPLS	RAIN BIRD 1806-SAM-MP LEFT STRIP, 6" POP-UP ROTATOR	40	5.5X16'	0.22
	RAIN BIRD 1804-SAM-(NOZZLE AS ABOVE), 4" POP-UP ROTATOR			
M	3/4" IRRIGATION METER (REFER TO CIVIL DRAWINGS)			
DCV	POINT OF CONNECTION : (1) 1" BRASS GATE VALVE (1) WILKENS 500, 1" PRESSURE REDUCING VALVE (1) FEBCO 850U, 1" DOUBLE CHECK VALVE ASSEMBLY (1) 1" RAINBIRD 44RC, 1" QUICK COUPLING VALVE (1) RAINBIRD 100 PEB, 1" MASTER VALVE			
	RAIN BIRD 100-PEB-PRS-D, 1" REMOTE CONTROL VALVE			
	RAIN BIRD XCZ-100-PRF, 1" DRIP CONTROL ZONE			
	RAIN BIRD XCZ-075-PRF, 3/4" DRIP CONTROL ZONE			
AR	RAIN BIRD AR VALVE KIT, AIR/VACUUM RELIEF VALVE			
DV	RAIN BIRD 16A-FDV-075, DRAIN VALVE			
C	RAIN BIRD ESPLXM-ESPLXMSM4, 12-STATION MODULAR CONTROLLER W/ RAIN BIRD ETM-LXM, ET MANAGER CARTRIDGE & RAIN BIRD RSD-BEX, RAIN SENSOR			
	RAIN BIRD LD-09-12, DRIPLINE W/0.92 GPH EMITTERS @ 18" O.C. W/ RAIN BIRD TDS-050, GALV. TIE DOWN STAKES @ 3' O.C.			
	1-1/4" MAINLINE, SCHEDULE 40 PVC			
	CLASS 200 PVC LATERAL LINE (3/4" UNLESS NOTED OTHERWISE)			
	4" SLEEVING, SCHEDULE 40 PVC			

1 — ZONE #
1.2 — G.P.M.
1" — VALVE SIZE/TYPE

IRRIGATION NOTES

1. VERIFY LOCATIONS OF ALL UNDERGROUND UTILITIES PRIOR TO COMMENCEMENT OF WORK. PROTECT ALL NEW AND EXISTING UTILITIES. PROMPTLY NOTIFY THE LANDSCAPE ARCHITECT OF ANY CONFLICT BETWEEN PROPOSED WORK AND OBSTRUCTIONS.
2. IRRIGATION CONTRACTOR SHALL PROVIDE PROTECTION OF ALL PROPERTY, PERSONS, WORK IN PROGRESS, STRUCTURES, UTILITIES, WALKS, CURBS, PAVED SURFACES AND EXISTING LANDSCAPE AND IRRIGATION TO REMAIN DURING THE INSTALLATION OF LANDSCAPE AND IRRIGATION WORK. VERIFY LOCATIONS OF ALL UNDERGROUND UTILITIES PRIOR TO COMMENCEMENT OF WORK AND PROTECT SAID UTILITIES.
3. IRRIGATION CONTRACTOR SHALL OBTAIN AND PAY FOR ALL NECESSARY PERMITS AND FEES AS REQUIRED BY APPLICABLE CODES AND ORDINANCES FOR THIS WORK. ALL WORK TO BE INSTALLED PER LOCAL CODE REQUIREMENTS AND MANUFACTURE'S SPECIFICATIONS.
4. PRESSURIZE MAINLINE TO 100 PSI FOR A PERIOD OF 2 HOURS CHECK ALL JOINTS AND CONNECTIONS FOR LEAKS AND REPAIR AS REQUIRED. PROVIDE WRITTEN DOCUMENTATION THAT A PRESSURE TEST HAS BEEN COMPLETED WITH NO MORE THAN 5 PSI LOSS DURING THE TEST DURATION.
5. UPON THE COMPLETION OF IRRIGATION WORK, OPERATE THE SYSTEM IN THE PRESENCE OF THE OWNERS REPRESENTATIVE. ADJUST AS REQUIRED.
6. GUARANTEE ALL MATERIALS AND WORKMANSHIP FOR A PERIOD OF ONE YEAR COMMENCING AT THE TIME OF FINAL ACCEPTANCE. THIS GUARANTEE DOES NOT APPLY TO WORK OR DAMAGE DONE TO THE IRRIGATION SYSTEM BY OTHERS AFTER FINAL ACCEPTANCE.
7. PRIOR TO FINAL ACCEPTANCE PROVIDE THE OWNER WITH A SET OF CLEARLY DRAWN REPRODUCIBLE RECORD DRAWINGS SHOWING ACTUAL LOCATION AND TYPE OF IRRIGATION ELEMENTS INSTALLED.
8. ATTACH RAIN BIRD RSD-BEX RAIN SENSOR ON BUILDING ROOF ABOVE LOCATION OF IRRIGATION CONTROLLER. WITHIN DIRECT LINE OF SIGHT OF CONTROLLER.

RWA
RICHARD WARD ASSOCIATES
Landscape Architecture
Site Planning
Urban Design
275 - 118th Avenue SE Ste 208
Bellevue, Washington 98005
(206) 453-1165

STATE OF WASHINGTON REGISTERED LANDSCAPE ARCHITECT
RICHARD WARD
CERTIFICATE NO. 297

6169 REGISTERED ARCHITECT
RICHARD C. ANDERSON JR.
STATE OF WASHINGTON

IRRIGATION DETAILS

Mark	Date	Description

REVISIONS

WOODLAND COMMONS
APARTMENTS
13906 NE 9TH PLACE

RICK ANDERSON, ARCHITECT
F O R M A I N U T I L I T A T A S I T
ARCHITECTURE
PLANNING
LAND USE CONSULTING
935 Daley Street • Edmonds • Washington • 98020 • (425) 778-2085

L2.2

Project No:
Date: 10/25/2010

WOODLAWN COMMONS_IRRIGATION_L-2_2.DW