DEVELOPMENT SERVICES DEPARTMENT
ENVIRONMENTAL COORDINATOR
450 110th Ave NE., P.O. BOX 90012
BELLEVUE, WA 98009-9012

OPTIONAL DETERMINATION OF NON-SIGNIFICANCE (DNS) NOTICE MATERIALS

The attached materials are being sent to you pursuant to the requirements for the Optional DNS Process (WAC 197-11-355). A DNS on the attached proposal is likely. This may be the only opportunity to comment on environmental impacts of the proposal. Mitigation measures from standard codes will apply. Project review may require mitigation regardless of whether an EIS is prepared. A copy of the subsequent threshold determination for this proposal may be obtained upon request.

File No.	09-124784-XE
Project Name/Address:	City of Bellevue Utilities Department Off Channel Sediment Pond / 4641 112th Ave SE
Planner:	David Pyle / dpyle@bellevuewa.gov
Phone Number:	425-452-2973
Minimum Comment Period:	**October 8, 2009**

Materials included in this Notice:

- ☒ Blue Bulletin
- ☒ Checklist
- ☒ Vicinity Map
- ☒ Plans
- ☐ Other:

Coal Creek Off Channel Sediment Pond - 4641 112th Ave NE

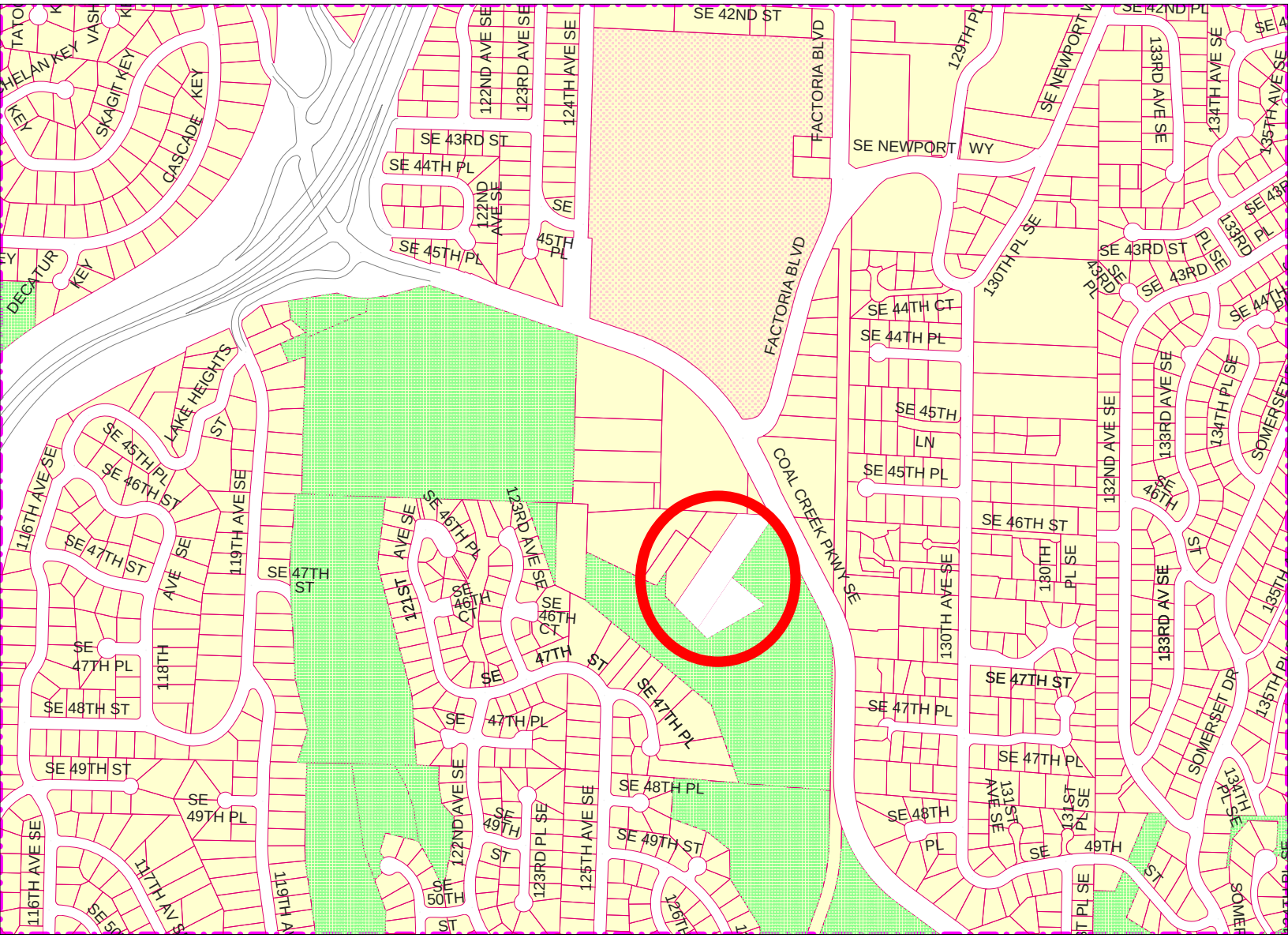

Coal Creek Off Channel Sediement Pond
SEPA Checklist 09-124784-XE
TO BE COMPLETED BY APPLICANT

City of Bellevue File Number 09-124784-XE
09/24/2009

City of Bellevue Utilities Department Coal Creek Off Channel Sediment Pond SEPA Checklist
4641 112th Ave SE

SEPA Checklist Reviewed By:
David Pyle, Land Use Planner
425-452-2973 - dpyle@bellevuewa.gov

WAC 197-11-960 Environmental checklist.

ENVIRONMENTA

Purpose of checklist:

The State Environmental Policy Act (SEPA), chapter 43.21C RCW, requires all governmental agencies to consider the environmental impacts of a proposal before making decisions. An environmental impact statement (EIS) must be prepared for all proposals with probable significant adverse impacts on the quality of the environment. The purpose of this checklist is to provide information to help you and the agency identify impacts from your proposal (and to reduce or avoid impacts from the proposal, if it can be done) and to help the agency decide whether an EIS is required.

Instructions for applicants:

This environmental checklist asks you to describe some basic information about your proposal. Governmental agencies use this checklist to determine whether the environmental impacts of your proposal are significant, requiring preparation of an EIS. Answer the questions briefly, with the most precise information known, or give the best description you can.

You must answer each question accurately and carefully, to the best of your knowledge. In most cases, you should be able to answer the questions from your own observations or project plans without the need to hire experts. If you really do not know the answer, or if a question does not apply to your proposal, write "do not know" or "does not apply." Complete answers to the questions now may avoid unnecessary delays later.

Some questions ask about governmental regulations, such as zoning, shoreline, and landmark designations. Answer these questions if you can. If you have problems, the governmental agencies can assist you.

The checklist questions apply to all parts of your proposal, even if you plan to do them over a period of time or on different parcels of land. Attach any additional information that will help describe your proposal or its environmental effects. The agency to which you submit this checklist may ask you to explain your answers or provide additional information reasonably related to determining if there may be significant adverse impact.

Use of checklist for nonproject proposals:

Complete this checklist for nonproject proposals, even though questions may be answered "does not apply." IN ADDITION, complete the SUPPLEMENTAL SHEET FOR NONPROJECT ACTIONS (part D).

For nonproject actions, the references in the checklist to the words "project," "applicant," and "property or site" should be read as "proposal," "proposer," and "affected geographic area," respectively.

A. BACKGROUND

1. Name of proposed project, if applicable:
Lower Coal Creek Off-line Sediment Pond

2. Name of applicant: **City of Bellevue**
3. Address and phone number of applicant and contact person:
City of Bellevue
Attn: Bruce Jensen
450 110th Avenue NE
PO Box 90012
Bellevue, WA 98009

4. Date checklist prepared: **August 17, 2009**
5. Agency requesting checklist: **City of Bellevue**
6. Proposed timing or schedule (including phasing, if applicable):
July 1, 2010 through September 1, 2010

7. Do you have any plans for future additions, expansion, or further activity related to or connected with this proposal? If yes, explain.

Reviewed By: _____

Annual maintenance will be required to remove up to 1,500 cubic yards of sediment from the off-line pond.

8. List any environmental information you know about that has been prepared, or will be prepared, directly related to this proposal.

1. **Critical Areas Report prepared by David Evans and Associates, Inc.**
2. **Biological Assessment prepared by David Evans and Associates, Inc.**
3. **Cultural and Historic Resources Report prepared by Northwest Archaeology, Inc.**
4. **Geotechnical Report prepared by GeoEngineers, Inc.**
5. **Wetland and Stream Delineation prepared by ICF Jones & Stokes**

9. Do you know whether applications are pending for governmental approvals of other proposals directly affecting the property covered by your proposal? If yes, explain.

An interest in this property is held by the City Parks Department for the potential development of a public parking area and trail head for the Coal Creek Trail. Although there is no pending request from the parks department to develop this area for a trail head this interest must be acknowledged as part of the review and potential future development of the site.

10. List any government approvals or permits that will be needed for your proposal, if known.

The proposed project will require permits from several agencies and jurisdictions including: U.S. Army Corps of Engineers, Washington State Department of Ecology, Washington State Department of Ecology, and City of Bellevue.

City of Bellevue Critical Areas Land Use Permit, Clearing and Grading Permit, and Demolition Permit.

11. Give brief, complete description of your proposal, including the proposed uses and the size of the project and site. There are several questions later in this checklist that ask you to describe certain aspects of your proposal. You do not need to repeat those answers on this page. (Lead agencies may modify this form to include additional specific information on project description.)

The project is defined as the construction and operation of an off-line sediment pond designed to capture up to a maximum of 1500 cubic yards on an annual basis. The off-line sediment pond will function like a backwater channel that is always connected to Coal Creek at the outlet. The inlet will only be engaged during storm events when water level rises above the inlet weir. Once engaged, flows leaving the creek will course down a concrete spillway to the permanent pool of the sedimentation pond, which is about 7 feet below the crest of the weir at the edge of the channel. Within the sedimentation pond, flows will slow, allowing much of the coarser suspended load to settle out. Flows exiting the sedimentation pond will rejoin Coal Creek approximately 350 feet downstream from where the overflow was routed from the creek. The combined size of both parcels is 3.08 acres (see location of parcel information in next question). The area to be cleared for construction of the pond is 0.75 acre, of which 0.14 will be impervious surface.

The pond will be maintained by the City's Utilities Department and sediment will be removed and transported to an offsite disposal location.

12. Location of the proposal. Give sufficient information for a person to understand the precise location of your proposed project, including a street address, if any, and section, township, and range, if known. If a proposal would occur over a range of area, provide the range or boundaries of the site(s). Provide a legal description, site plan, vicinity map, and topographic map, if reasonably available. While you should submit any plans required by the agency, you are not required to duplicate maps or detailed plans submitted with any permit applications related to this checklist.

The proposed project site is located within the City of Bellevue, Washington (Section 16, Township 24 north, Range 05 east, W.M.). The proposed off-line sediment pond would be located on lower Coal Creek east of Interstate 405 (I-405), south/southwest of Coal Creek Parkway, at approximate river mile (RM) 1.4. Coal Creek is tributary to Lake Washington. The project site is in Water Resource Inventory Area 8: Cedar – Sammamish Basin. More specifically, the project site is within the Coal Creek Watershed, 6th Field Hydrologic Unit Code 171100120302, while the approximate latitude and longitude of the central project area is 47.56254° N by 122.17125° W at an elevation of approximately 111 feet above sea level.

The general project area is located on the McIntosh parcels (Parcel No. 1624059084 and 1624059190), which were recently purchased by the City of Bellevue and will become part of Coal Creek Park. Coal Creek Park is a 550-acre park that is owned by the City of Bellevue. This park is largely undeveloped and consists of third-growth forest in a steep ravine with approximately three miles of unpaved trails. The project site is located at 4641 125th Avenue SE, Bellevue, Washington 98006. This two-parcel lot currently contains a single-family home and is bisected by Coal Creek.

Reviewed By: _____

TO BE COMPLETED BY APPLICANT

EVALUATION FOR AGENCY USE ONLY

B. ENVIRONMENTAL ELEMENTS

1. Earth

a. General description of the site (circle one): Flat, rolling, hilly, steep slopes, mountainous, other . . . . . .

b. What is the steepest slope on the site (approximate percent slope)?
Estimated to be approximately 60 percent.

c. What general types of soils are found on the site (for example, clay, sand, gravel, peat, muck)? If you know the classification of agricultural soils, specify them and note any prime farmland.
The U.S. Department of Agriculture (USDA) Soil Conservation Service (SCS) mapped soils in the project area as Norma sandy loam. This soil type is described as having a slight erosion hazard with permeability being moderately rapid. The typical profile includes 0 to 10 inches of black (10YR 2/1) sandy loam that is dark grayish-brown (10YR 4/2) when dry. From 10 to 30 inches the soil is dark grayish-brown (2.5Y 4/2) sandy loam, light brownish (2.5Y 6/2) dry, with many prominent yellowish-red (5YR 7/1) and brown (7.5 YR 4/4) mottles. The USDA SCS Hydric Soils of the State of Washington (USDA 1991) list for King County includes Norma sandy loam as a hydric soil.

No modification of steep slopes is proposed as part of this project. Work is limited to areas at the toe of the slope and within the stream buffer and channel.

d. Are there surface indications or history of unstable soils in the immediate vicinity? If so, describe.
The steep slope immediately north of the project area appears to have recently sloughed.

e. Describe the purpose, type, and approximate quantities of any filling or grading proposed. Indicate source of fill.
All filling and grading are associated with construction and maintenance of the sediment pond. The source of fill will be a commercial site, which is unknown at this time.

f. Could erosion occur as a result of clearing, construction, or use? If so, generally describe.
Yes, but erosion control measures will be implemented to minimize or eliminate this concern. Potential erosion is generally associated with storm events during construction.

A Clearing and Grading Permit is required. Site management practices and erosion control plans are reviewed as part of the Clearing and Grading Permit to ensure project plans comply the the City's Clearing and Grading Code, BCC 23.76.

g. About what percent of the site will be covered with impervious surfaces after project construction (for example, asphalt or buildings)?
The combined size of both parcels is 3.08 acres, while the project area is 1.02 acre. The area to be cleared for construction of the pond is 0.75 acre, of which 0.14 will be impervious surface. At the parcel scale 4.5 percent will be impervious. At the project area (pond) scale 13.7 percent will be impervious.

h. Proposed measures to reduce or control erosion, or other impacts to the earth, if any:
Potential impacts to water quality could occur during either construction or maintenance activities. Impacts are primarily limited to temporary increases in turbidity. Impacts associated with an increase in water temperature have been minimized through design. Temperature-related impacts are considered temporary, localized, and discountable. However, these potential impacts can be reduced or avoided by implementation of the conservation and performance measures outlined below.

Conservation and Performance Measures
General

- **A TESC Plan will be developed and implemented.**
- **A qualified Erosion and Control Inspector will review all sediment control measures twice per week during construction. Qualified means the inspector will be a CESCL.**

Reviewed By: _____

- **Turbidity will be monitored per the Turbidity Monitoring Plan outlined in Appendix G of the Critical Areas Report.**
- **A Spill Prevention Control and Countermeasures plan that meets Ecology standards will be developed and implemented for the project to ensure that all pollutants and products will be controlled and contained.**
- **Seasonal restrictions applied to work conducted below the OHWM will be as required by a project-specific HPA issued by the WDFW.**
- **Construction impacts will be confined to the minimum area necessary to complete the project.**
- **Removal of riparian vegetation will be minimized as much as possible.**
- **Implementation of the Mitigation Plan outlined in Appendix E of the Critical Areas Report will occur.**

Water Quality/Erosion Control

- **All BMPs will be installed according to City of Bellevue standards and will be inspected and maintained throughout the life of the project.**
- **Staging and soil stockpile areas will be limited to those outlined in the clearing and grading permit. Staging areas will be fenced.**
- **Spill kits will be kept on-site.**
- **Fuels and other potentially hazardous materials will be kept in a secured area. Secured means fenced, and locked during non-work hours.**
- **Secondary containment will be required for all hazardous materials. Spill containment is required for generators, parked equipment, porta-potty, fuels, solvents, etc.**
- **The project will comply with water quality conditions identified by Ecology.**
- **Wash water resulting from wash down of equipment or work areas will be contained for proper treatment and/or disposal, and will not be directly discharged into state waters.**
- **There will be no discharge of oil, fuels, or chemicals to surface waters, or onto land where there is a potential for reentry into surface waters.**
- **No cleaning solvents or chemicals used for tools or equipment cleaning will be discharged to ground or surface waters.**
- **The contractor will regularly check fuel hoses, oil drums, oil or fuel transfer valves, fittings, etc. for leaks, and will maintain and store materials properly to prevent spills.**
- **BMPs will be used on all project activities to control and prevent sediments from entering aquatic systems.**

In-water and Over-water Work

- **All fish will be removed from the work area prior to any in-water work activities per the Fish Salvage Plan in Appendix F of the Critical Areas Report.**
- **Materials removed from below the OHWM will be placed in an upland location where they cannot enter water bodies.**
- **Materials, such as riprap and LWD, placed within the water, will be free of sediment and or other contaminants.**
- **Water pumped from work isolation areas will be treated to remove suspended sediments prior to returning to the water body. Discharge will occur in such a manner as not to cause erosion.**
- **Mechanical equipment will not enter the stream channel until the project area has been dewatered and fish salvage has been completed.**
- **Mechanical equipment operating in the project area will be inspected daily for leaks. Any equipment found to be leaking will immediately be fixed or removed from the project site.**

Operational and Maintenance

- **The pond will be inspected during and immediately after significant storm events.**

Reviewed By: R.P.

- **Prior to annual pond cleaning (sand removal), a city engineer and biologist will inspect the site to determine the level of required maintenance.**
- **A biologist will perform fish salvage activities as needed during maintenance.**
- **Turbidity levels will be monitored per Ecology and City standards during maintenance.**
- **Pond maintenance will occur during the WDFW in-water work window.**
- **If, for some unforeseen reason, work on the pond must occur outside the approved in-water work window, these actions will be coordinated with the WDFW and Corps.**

2. Air

a. What types of emissions to the air would result from the proposal (i.e., dust, automobile, odors, industrial wood smoke) during construction and when the project is completed? If any, generally describe and give approximate quantities if known.

Emissions to air would be limited to exhaust from construction equipment, which will primarily be diesel engines.

b. Are there any off-site sources of emissions or odor that may affect your proposal? If so, generally describe.

None known.

c. Proposed measures to reduce or control emissions or other impacts to air, if any:

None proposed.

3. Water

a. Surface:

1) Is there any surface water body on or in the immediate vicinity of the site (including year-round and seasonal streams, saltwater, lakes, ponds, wetlands)? If yes, describe type and provide names. If appropriate, state what stream or river it flows into.

Coal Creek bisects the project site, and the off-line pond is designed to intercept sediment from it during high flow events. Coal Creek is a type F waterbody. Coal Creek is a tributary to Lake Washington. An unnamed tributary to Coal Creek exists in the northern portion of the project site. This tributary was previously defined as a type F waterbody, but likely ranges from type F to type N, depending on reach.

2) Will the project require any work over, in, or adjacent to (within 200 feet) the described waters? If yes, please describe and attach available plans.

Yes, work will occur in and adjacent to Coal Creek, but no work in the unnamed tributary or its buffer is proposed.

3) Estimate the amount of fill and dredge material that would be placed in or removed from surface water or wetlands and indicate the area of the site that would be affected. Indicate the source of fill material.

The following table itemizes the project actions that involve fill or dredge in Waters of the United States

Project Action Summary

Activity Causing Impact (clear, dredge, fill, pile drive, etc.)	Amount of Material Placed In or Removed	Area of Waterbody Directly Affected	Materials Removed	Materials Added
Diversion weir structure	13 CY (removed and replaced)	35 LF	Native streambank	Cast-in-place reinforced concrete, steel I-beams, weir plates, bedding material, and streambed gravel
Upper log jam	3 CY removed, 3.5 CY replaced	55 LF	Native streambed / bank	Boulders and streambed gravel
Lower log jam	3 CY removed, 3.5 CY replaced	40 LF	Native streambed / bank	Boulders and streambed gravel
Sweeper log (2)	0 CY (cantilevered over waterbody)	5 LF	n/a	n/a
Strainer log	0 CY (cantilevered over waterbody)	5 LF	n/a	n/a
Upper bank logs (2)	2 CY (removed and replaced)	30 LF	Native streambank	Streambed gravel
Lower bank logs (4)	2 CY (removed and replaced)	52 LF	Rockery and native streambank	Streambed gravel
Upper grade control	10 CY (removed and replaced)	30 LF	Native streambed	Streambed gravel
Lower grade control	10 CY (removed and replaced)	30 LF	Native streambed	Streambed gravel
Turning log (1)	0 CY (removed and replaced)	15 LF	n/a	n/a
Outlet sill logs (3)	33 CY (removed and replaced)	45 LF	Rockery and native streambed	Streambed gravel
Upper log v-weir	27 CY (removed and replaced)	36 LF (perpendicular to stream)	Native streambed	Streambed gravel
Lower log v-weir	31 CY (removed and replaced)	42 LF	Native streambed	Rebar, streambed gravel
V-weir drop pools (2)	39 CY removed and 27 CY replaced	264 SF	Native streambed	Streambed gravel
Inlet streambed	28 CY removed and 110 CY replaced	750 SF	Native streambed	Streambed gravel
Outlet streambed	66 CY removed and 110 CY replaced	1900 SF	Native streambed	Streambed gravel
Outlet excavation	25 CY removed	35 LF	Native streambed / bank	Streambed gravel
Sheet pile	0 CY added, 0 CY removed	75 LF	n/a	Plastic or steel sheetpile

4) Will the proposal require surface water withdrawals or diversions? Give general description, purpose, and approximate quantities if known.

The off-line sediment pond will function like a backwater channel that is always connected to Coal Creek at the outlet. The project will route high flow from Coal Creek into the off-line pond, which will then discharge back to Coal Creek through the pond outlet. The sedimentation pond is designed to be engaged only during high flow events when most of the sediment transport occurs. Graph 1 shows the percentage of Coal Creek flows to be routed into the facility, assuming diversion beginning at around 30 cubic feet per second (cfs). The results shown are based on an analysis of streamflow data recorded by King County from 2002 to 2005. During the winter months, over 20 percent of the Coal Creek flows could be routed into the off-channel facility. However, the vast majority of the flow remains within Coal Creek itself. During the summer months, virtually all of the flow remains within Coal Creek.

Reviewed By: D.P.

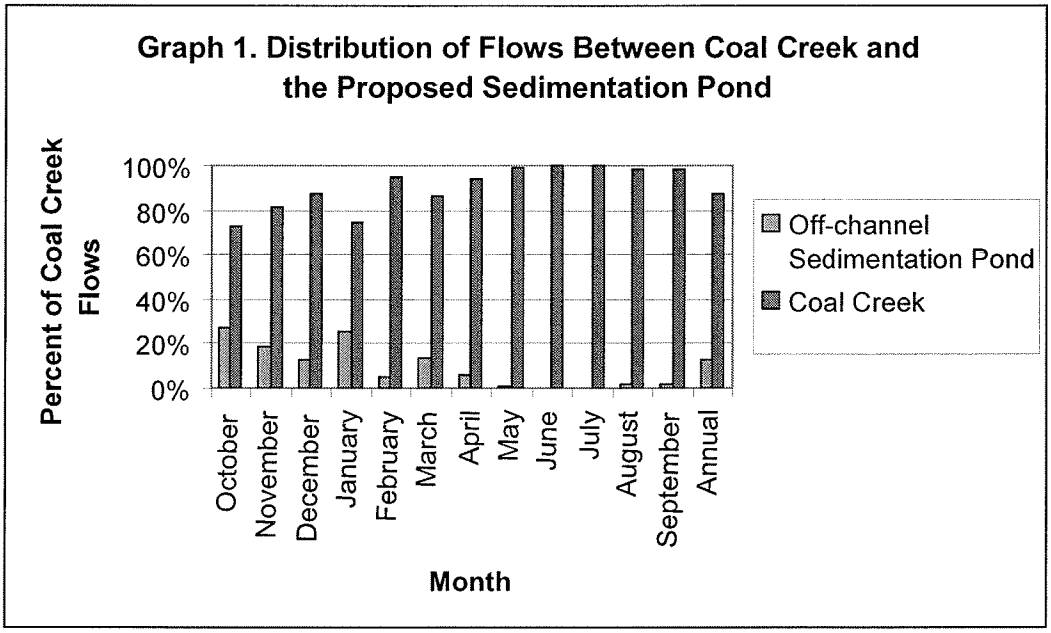

Because the flows into the sedimentation pond are overflows, it will not be capturing bed load, but instead targeting sands and finer-grained material. According to GeoEngineers, 76 percent of the sediment that is retained at the Coal Creek delta is sand. So having a facility to target sands is appropriate. Also, when operating in conjunction with the upstream in-line sedimentation facility, which targets the larger bed material, the two sedimentation ponds target the full spectrum of material that has been shown to move through the creek to the delta.

5) Does the proposal lie within a 100-year floodplain? If so, note location on the site plan.
Yes. The 100-year floodplain within the project area is restricted to the main channel of Coal Creek and does not extend to the adjacent uplands.

6) Does the proposal involve any discharges of waste materials to surface waters? If so, describe the type of waste and anticipated volume of discharge.

No.

None planned although possible during construction. See section B.1.h above.

b. Ground:

1) Will ground water be withdrawn, or will water be discharged to ground water? Give general description, purpose, and approximate quantities if known.

No.

2) Describe waste material that will be discharged into the ground from septic tanks or other sources, if any (for example: Domestic sewage; industrial, containing the following chemicals. . . ; agricultural; etc.). Describe the general size of the system, the number of such systems, the number of houses to be served (if applicable), or the number of animals or humans the system(s) are expected to serve.
No waste material will be discharged to the ground.

Reviewed By: _____

c. Water runoff (including stormwater):

1) Describe the source of runoff (including storm water) and method of collection and disposal, if any (include quantities, if known). Where will this water flow? Will this water flow into other waters? If so, describe.

No stormwater discharge is associated with this project.

2) Could waste materials enter ground or surface waters? If so, generally describe.

No waste materials will be generated by the project.

This is a proposal for a new sediment pond designed to collect, slow, and release water in an effort to remove suspended sediment particles from transport downstream into Lake Washington. Water from Coal Creek will be diverted and collected during storm events. This water will be temporarily stored, sediment removed through deposition, and the water released back into the channel of Coal Creek downstream of the pond inlet.

d. Proposed measures to reduce or control surface, ground, and runoff water impacts, if any:

Please refer to B.h. for a complete list of erosion control measures.

B.1.h

4. Plants

a. Check or circle types of vegetation found on the site:

——— deciduous tree: alder, maple, aspen, other

——— evergreen tree: fir, cedar, pine, other

——— shrubs

——— grass

——— pasture

——— crop or grain

——— wet soil plants: cattail, buttercup, bullrush, skunk cabbage, other

——— water plants: water lily, eelgrass, milfoil, other

——— other types of vegetation

Please refer to the Critical Areas Study for a complete description of the project site.

The Critical Areas Report is attached to this SEPA Checklist.

b. What kind and amount of vegetation will be removed or altered?

Up to 31 significant trees will be removed during clearing of the site. Significant is defined as being trees with a diameter at breast height greater than 8 inches. Significant trees to be removed includes approximately two apple trees, five alder, ten maple, six fir, six cedar, and two unidentified.

c. List threatened or endangered species known to be on or near the site.

No threatened or endangered plant species are known to occur in the project area.

Mitigation for all trees removed within the stream, stream buffer, wetland, or wetland buffer is required. See attached Critical Areas Report for complete conceptual mitigation plans.

d. Proposed landscaping, use of native plants, or other measures to preserve or enhance vegetation on the site, if any:

Please refer to Appendix E in the Critical Areas Report to review the proposed mitigation plan.

5. Animals

a. Circle any birds and animals which have been observed on or near the site or are known to be on or near the site:

birds: hawk, heron, eagle, songbirds, other:
mammals: deer, bear, elk, beaver, other:
fish: bass, salmon, trout, herring, shellfish, other:

Reviewed By: DP

The City and County have documented Chinook salmon in the project vicinity. See WRIA 8 documents @ http://www.govlink.org/watersheds/8/reports/fish-maps/chinook/default.aspx.

b. List any threatened or endangered species known to be on or near the site.
No threatened or endangered animal species are known to occur in the project area.

c. Is the site part of a migration route? If so, explain.
The project site is not part of a migration route.

No, the project is not part of a know migration route howevor is part of an essential fish spawning linkage to Lake Washington and the Puget Sound.

d. Proposed measures to preserve or enhance wildlife, if any:
A mitigation plan has been prepared to compensate for both temporary and permanent impacts associated with this project. The mitigation plan includes planting native trees and shrubs where temporary disturbances associated with clearing are proposed, and enhancing existing degraded habitat outside the project footprint. The mitigation plan also includes installation of habitat features such as snags with bird and bat boxes, and downed logs. These features are designed to enhance wildlife habitat. Preservation of habitat has occurred by minimizing the project footprint to the smallest area possible and saving existing habitat where possible. Preservation of existing habitat also occurred during the site selection process such that the proposed site has existing road access and the pond footprint includes an existing structure and clearing.

Impacts to habitat associated with species of local importance must be mitigated in accordance with the requirements of LUC 20.25H.150 through LUC 20.25H.170.

6. Energy and natural resources

a. What kinds of energy (electric, natural gas, oil, wood stove, solar) will be used to meet the completed project's energy needs? Describe whether it will be used for heating, manufacturing, etc.
The completed project will not have any energy needs.

The completed project will require periodic cleaning by diesel powered heavy equipment used to remove sediment extracted from water.

b. Would your project affect the potential use of solar energy by adjacent properties? If so, generally describe.
The completed project will not affect solar energy.

c. What kinds of energy conservation features are included in the plans of this proposal? List other proposed measures to reduce or control energy impacts, if any:
No energy conservation features are associated with this project.

7. Environmental health

a. Are there any environmental health hazards, including exposure to toxic chemicals, risk of fire and explosion, spill, or hazardous waste, that could occur as a result of this proposal? If so, describe.
No environmental health hazards are known to exist.

1) Describe special emergency services that might be required.
No special emergency services are required.

2) Proposed measures to reduce or control environmental health hazards, if any:
No measures are proposed to reduce or control environmental health hazards.

b. **Noise**

1) What types of noise exist in the area which may affect your project (for example: traffic, equipment, operation, other)?

Reviewed By: DP

No existing noise will affect the project.

2) What types and levels of noise would be created by or associated with the project on a short-term or a long-term basis (for example: traffic, construction, operation, other)? Indicate what hours noise would come from the site.

Noise levels at the project site would increase during construction due to the operation of construction equipment. Once construction is finished, noise levels would drop back to existing levels except during periods of maintenance. Construction equipment will operate during the weekday, generally between 7:00 AM to 4:00 PM from July 1st through September 1st. Maintenance activities would occur during this same general time period but would only last for approximately two weeks. No pile driving or blasting is proposed. Construction-related noise from specific types of equipment is summarized below.

Construction and operation noise is regulated by BCC 9.18. The proposed construction must meet the requirements of this section.

Construction Equipment List, Use, and Reference Maximum Noise Levels

Equipment	Expected Use	Lmax (dBA)
Air Compressors	Pneumatic tools	70
Backhoe	General Construction	78 - 82
Concrete Pump	Pumping Concrete	78 - 82
Excavator	General construction and materials handling	82 - 88
Haul Trucks	Materials handling and general hauling	86
Loader	General construction and materials handling	86
Pumps	General construction use and water removal	62
Pneumatic Tools	Miscellaneous construction work	78 - 86
Service Trucks	Repair and maintenance activities	72
Tractor Trailers	Material delivery and removal	86
Utility Trucks	General project work	72
Vibratory Equipment (Roller)	Soil compacting	82 - 88

3) Proposed measures to reduce or control noise impacts, if any:

No measures are proposed to reduce or control noise.

Construction and operation noise is regulated by BCC 9.18. The proposed construction must meet the requirements of this section.

8. Land and shoreline use

a. What is the current use of the site and adjacent properties?

Single-family homes exist along 125th Avenue SE, which generally parallels the north side of Coal Creek. 125th Avenue SE connects with Coal Creek Parkway to the west and ends at the project site, and is located between Coal Creek Parkway and Coal Creek. Coal Creek Park abuts the east side of the parcel. The south side of Coal Creek is predominantly forested.

b. Has the site been used for agriculture? If so, describe.

No.

c. Describe any structures on the site.

There is an existing home and mobile trailer on site.

d. Will any structures be demolished? If so, what?

Yes, the existing structures would be removed/demolished as part of the project.

A demolition permit is required for the demolition of any structures.

Reviewed By: _____

e. What is the current zoning classification of the site?

The project area is zoned as single family R-2.5.

f. What is the current comprehensive plan designation of the site?

Single Family – medium density based on Figure 3a Comprehensive Plan Land Use Designations, City of Bellevue Shoreline Master Program map dated December, 2008.

g. If applicable, what is the current shoreline master program designation of the site?

Not applicable.

The project is not within Shoreline jurisdiction.

h. Has any part of the site been classified as an "environmentally sensitive" area? If so, specify.

Yes, Coal Creek, unnamed tributary to Coal Creek, and on-site wetlands are all environmentally sensitive.

See attached critical areas report for stream and wetland typing.

i. Approximately how many people would reside or work in the completed project?

None.

j. Approximately how many people would the completed project displace?

None.

k. Proposed measures to avoid or reduce displacement impacts, if any:

None.

This project will be constructed across two single family parcels and will displace two single family residences to be replaced with a City of Bellevue Utilities Department sediment pond. The City has purchased the two properties and plans to demolish the residences prior to constructing the pond.

l. Proposed measures to ensure the proposal is compatible with existing and projected land uses and plans, if any:

Project review by the City of Bellevue.

Application for Critical Areas Land Use Permit, Clearing and Grading Permit, and Demolition Permit.

9. Housing

a. Approximately how many units would be provided, if any? Indicate whether high, middle, or low-income housing.

None.

b. Approximately how many units, if any, would be eliminated? Indicate whether high, middle, or low-income housing.

The existing on-site single-family home will be demolished as part of the overall project.

A demolition permit is required.

c. Proposed measures to reduce or control housing impacts, if any:

None.

10. Aesthetics

a. What is the tallest height of any proposed structure(s), not including antennas; what is the principal exterior building material(s) proposed?

Not applicable – no structures proposed.

The pond is proposed to be approximately 15 feet in depth from the rim to the bottom.

b. What views in the immediate vicinity would be altered or obstructed?

None.

Reviewed By: _____

c. Proposed measures to reduce or control aesthetic impacts, if any:
Fencing will be installed along the west side of the sediment pond.

Subject to approval by the City's Development Services Land Use Division.

11. Light and glare

a. What type of light or glare will the proposal produce? What time of day would it mainly occur?
No lighting proposed.

b. Could light or glare from the finished project be a safety hazard or interfere with views?
No.

c. What existing off-site sources of light or glare may affect your proposal?
None.

d. Proposed measures to reduce or control light and glare impacts, if any:
None.

12. Recreation

a. What designated and informal recreational opportunities are in the immediate vicinity?
Hiking. Coal Creek Trail

b. Would the proposed project displace any existing recreational uses? If so, describe.
No, since the site was just obtained and was previously private property.

c. Proposed measures to reduce or control impacts on recreation, including recreation opportunities to be provided by the project or applicant, if any:
No specific measures are proposed.

13. Historic and cultural preservation

a. Are there any places or objects listed on, or proposed for, national, state, or local preservation registers known to be on or next to the site? If so, generally describe.
None known.

b. Generally describe any landmarks or evidence of historic, archaeological, scientific, or cultural importance known to be on or next to the site.
None known.

c. Proposed measures to reduce or control impacts, if any:
A cultural and historic investigation is being conducted as part of the permitting process.

Verification of absence of cultural and historic resources to be submitted prior to project approval.

14. Transportation

a. Identify public streets and highways serving the site, and describe proposed access to the existing street system. Show on site plans, if any.

Reviewed By: RD

The project site is at the end, or terminus of 125th Avenue SE.

b. Is site currently served by public transit? If not, what is the approximate distance to the nearest transit stop?

No. The nearest public transit is within 0.5 mile along Coal Creek Parkway.

c. How many parking spaces would the completed project have? How many would the project eliminate?

None.

d. Will the proposal require any new roads or streets, or improvements to existing roads or streets, not including driveways? If so, generally describe (indicate whether public or private).

No.

e. Will the project use (or occur in the immediate vicinity of) water, rail, or air transportation? If so, generally describe.

No.

f. How many vehicular trips per day would be generated by the completed project? If known, indicate when peak volumes would occur.

None.

g. Proposed measures to reduce or control transportation impacts, if any:

None.

15. Public services

a. Would the project result in an increased need for public services (for example: fire protection, police protection, health care, schools, other)? If so, generally describe.

No.

b. Proposed measures to reduce or control direct impacts on public services, if any.

None.

16. Utilities

a. Circle utilities currently available at the site: electricity, natural gas, water, refuse service, telephone, sanitary sewer, septic system, other.

b. Describe the utilities that are proposed for the project, the utility providing the service, and the general construction activities on the site or in the immediate vicinity which might be needed.

None proposed.

Reviewed By: _____

C. SIGNATURE

The above answers are true and complete to the best of my knowledge. I understand that the lead agency is relying on them to make its decision.

Signature: .....

Date Submitted: ..... 9/7/09 .....

2 0 0 9
WASHINGTON STATE
Joint Aquatic Resources Permit Application (JARPA) Form [help]

US Army Corps of Engineers ®
Seattle District

AGENCY USE ONLY

Date received:

Agency reference #: _____

Tax Parcel #(s): _____

_____

_____

USE BLACK OR BLUE INK TO ENTER ANSWERS IN WHITE SPACES BELOW.

Part 1–Project Identification

Unique project information that makes it easy to identify. [help]

1a. Unique Project Identifier Number (UPI #) [help] • Don't have one yet? Get one at http://www.epermitting.wa.gov or call the Washington Governor's Office of Regulatory Assistance at (800) 917-0043.
338532-09-01
1b. Project Name (Examples: Smith's Dock or Seabrook Lane Development) [help]
City of Bellevue Coal Creek Off-Line Sediment Pond

Part 2–Applicant

The person or organization legally responsible for the project. [help]

2a. Name (Last, First, Middle) and Organization (if applicable)			
Jensen, Bruce – City of Bellevue			
2b. Mailing Address (Street or PO Box)			
450 110th Avenue NE – P.O. Box 90012			
2c. City, State, Zip			
Bellevue, WA 98009			
2d. Phone (1)	**2e.** Phone (2)	**2f.** Fax	**2g.** E-mail
(425.452.7240)	(425.452.6800)	(425.452.7919)	BJensen@bellevuewa.gov

Part 3–Authorized Agent or Contact

Person authorized to represent the applicant about the project. (Note: Authorized agent(s) must sign 11b. of this application.) [help]

3a. Name (Last, First, Middle) and Organization (if applicable)			
Swarts, Scott, Alan – David Evans and Associates, Inc.			
3b. Mailing Address (Street or PO Box)			
415 118th Avenue SE			
3c. City, State, Zip			
Bellevue, WA 98005			
3d. Phone (1)	**3e.** Phone (2)	**3f.** Fax	**3g.** E-mail
425.519.6593	425.519.6500	425.519.5361	sasw@deainc.com

Part 4–Property Owner(s) [help]

Contact information for people or organizations owning the property(ies) where the project will occur. [help]

☒ Same as applicant. (Skip to Part 5.)

☐ Repair or maintenance activities on existing rights-of-way or easements. (Skip to Part 5.)

☐ There are multiple property owners. Complete the section below and use JARPA Attachment A for each additional property owner.

4a. Name (Last, First, Middle) and Organization (if applicable)			
4b. Mailing Address (Street or PO Box)			
4c. City, State, Zip			
4d. Phone (1)	**4e.** Phone (2)	**4f.** Fax	**4g.** E-mail
( )	( )	( )	

Part 5–Project Location(s)

Identifying information about the property or properties where the project will occur. [help]

☐ There are multiple properties or project locations (e.g., linear projects). Complete the section below and use JARPA Attachment B for each additional property.

5a. Street Address (Cannot be a PO Box. If there is no address, provide other location information in 5n.) [help]			
4641 125th Avenue SE			
5b. City, State, Zip (If the project is not in a city or town, provide the name of the nearest city or town.) [help]			
Bellevue, WA 98006			
5c. County [help]			
King			
5d. Provide the section, township, and range for the project location. [help]			
¼ Section	**Section**	**Township**	**Range**
SE	16	24 North	5 East
5e. Provide the latitude and longitude of the project location. [help] • Example: 47.03922 N lat. / -122.89142 W long			
47.56254 N lat. / 122.17125 W long.			
5f. List the tax parcel number(s) for the project location. [help] • The local county assessor's office can provide this information.			
1624059084 and 1624059190 (parcels are adjacent to one another)			
5g. Indicate the type of ownership of the property. (Check all that apply.) [help]			
☐ State Owned Aquatic Land ☐ Tribal ☐ Private ☒ Other publicly owned (federal, state, county, city, special districts like schools, ports, etc.)			

5h. Contact information for all adjoining property owners, lessees, etc. (If you need more space, use JARPA Attachment C.) [help]

Name	Mailing Address	Tax Parcel # (if known)
Douglas and Rene Pelton	4627 125th Avenue SE Bellevue, WA 98006	1624059083 1624059318
Wang Chi	12627 Coal Creek Pkwy SE Bellevue, WA 98006	1624059144
Newport Covenant Church	12800 Coal Creek Pkwy SE Bellevue, WA 98006	1624059057

5i. Is any part of the project area within a 100-year flood plain? [help]

☒ Yes ☐ No ☐ Don't know

5j. Briefly describe the vegetation and habitat conditions on the property. [help]

On-site riparian vegetation is generally native. Areas of disturbance were limited to the left-bank where the existing house is located (downstream reach), and at a sewer or water main crossing (upstream most reach). The overall dominant riparian tree is red alder (*Alnus rubra*), followed by big-leaf maple (*Acer macrophylum*) intermixed with a few mature Douglas fir (*Pseudotsuga menziesii*) and black cottonwood (*Populus balsamifera*). There are a few small western red cedar (*Thuja plicata*) and bitter cherry (*Prunus emarginata*) trees on-site. The small western red cedar trees appear to have been part of a mitigation planting plan associated with the bank armoring along the lower reach.

Dominant shrubs include vine maple (*Acer circinatum*), salmonberry (*Rubus specabilis*), and a lesser amount of red-osier dogwood (*Cornus sericea*), Indian plum (*Oemleria cerasiformis*), and beaked hazelnut (*Corylus cornuta*). Indian plum and beaked hazelnut become more prevalent in the forested uplands. Reed canarygrass (*Phalaris arundacea*), and Himalayan blackberry (*Rubus armeniacus*) intermixed with bittersweet nightshade (*Solanum dulcamara*) and morning glory (*Convolvulus arvensis*), was noted in some areas along the stream channel. The left-bank in the general location of a sewer or water main crossing under Coal Creek is dominated by hydroseed grasses. Other non-native species in the buffer included Canada thistle (*Cirsium arvense*), bamboo (*Bambusa* sp.), Scotch broom (*Cytisus scoparius*), as well as several other upland weeds—cat's ear (*Hypochaeris radicata*), nipplewort (*Lapsana communis*), English plantain (*Plantago lanceolata*), and dandelion (*Taraxacum officinale*). English Ivy (*Hedera helix*) covered most of the trees and bank armoring along the left bank of the lower reach between the existing house and bank armoring.

Other species noted along or near the stream channel during the survey included devil's club (*Oplopanax horridus*), bracken fern (*Pteridium aquilinum*), lady fern (*Athyrium filix-femina*), sword fern (*Polystichum munitum*), creeping buttercup (*Ranunculus repens*), Pacific bleeding heart (*Dicentra formosa*), field horsetail (*Equisetum arvense*), giant horsetail (*Equisetum telmateia*), and stinging nettle (*Urtica dioica*).

Vegetation along the stream bank is generally thick, but lacks an understory of small conifer trees, and non-native species are co-dominant in specific areas. The right-bank or south side of the stream channel is completely forested with a similar mixture of species noted above, except the number of non-native species is less. Behind the somewhat narrow band of vegetation on the left-bank or north side of the stream channel is the existing house, associated structures, road, and a relatively large clearing. A few snags, stumps, and downed logs were noted, but they are not abundant.

5k. Describe how the property is currently used. [help]

The project site was recently used as a rental property and for storage of debris. The project site was just purchased by the City of Bellevue.

5l. Describe how the adjacent properties are currently used. [help]

Single-family homes are located to the west, while Coal Creek Park is to the east. The general project area is situated between Coal Creek Parkway and Coal Creek.

5m. Describe the structures (above and below ground) on the property, including their purpose(s). [help]

There is currently a small home and trailer on site. The property was used as a rental unit by the previous owners.

5n. Provide driving directions from the closest highway to the project location, and attach a map. [help]

From I-405 in Bellevue (south of I-90), take the Coal Creek Parkway Exit (Exit 10) east toward Factoria (0.4 mile). From Coal Creek Parkway turn right onto 125th Avenue SE. The project site is at the end of the road (0.2 mile).

Part 6–Project Description

6a. Summarize the overall project. You can provide more detail in 6d. [help]

The project is defined as the construction and operation of an off-line sediment pond designed to capture up to a maximum of 1500 cubic yards on an annual basis. The off-line sediment pond will function like a backwater channel that is always connected to Coal Creek at the outlet in order to allow fish to enter or exit the facility. The inlet will only be engaged during storm events when water level rises above the diversion weir. Once engaged, flows leaving the creek will course down a concrete spillway to the permanent pool of the sedimentation pond, which is about 7 feet below the crest of the weir at the edge of the channel. Within the sedimentation pond, flows will slow, allowing much of the coarser suspended load to settle out. Flows exiting the sedimentation pond will rejoin Coal Creek approximately 350 feet downstream from where the overflow was diverted from the creek.

The sedimentation pond is designed to be engaged only during high flow events when most of the sediment transport occurs. **Graph 1** shows the percentage of Coal Creek flows to be routed through the facility assuming overflow beginning at around 30 cubic feet per second (cfs). The results shown are based on an analysis of streamflow data recorded by King County from 2002 to 2005. During the winter months, over 20 percent of the Coal Creek flows could be routed into the off-channel facility. However, the vast majority of the flow remains within Coal Creek itself. During the summer months, virtually all of the flow remains within Coal Creek.

Because the flows into the sedimentation pond are overflows, it will not be capturing bed load, but instead targeting sands and finer-grained material. According to GeoEngineers, 76 percent of the sediment that is retained at the Coal Creek delta is sand. So having a facility to target sands is appropriate. Also, when operating in conjunction with the upstream in-line sedimentation facility, which targets the larger bed material, the two sedimentation ponds target the full spectrum of material that has been shown to move through the creek to the delta.

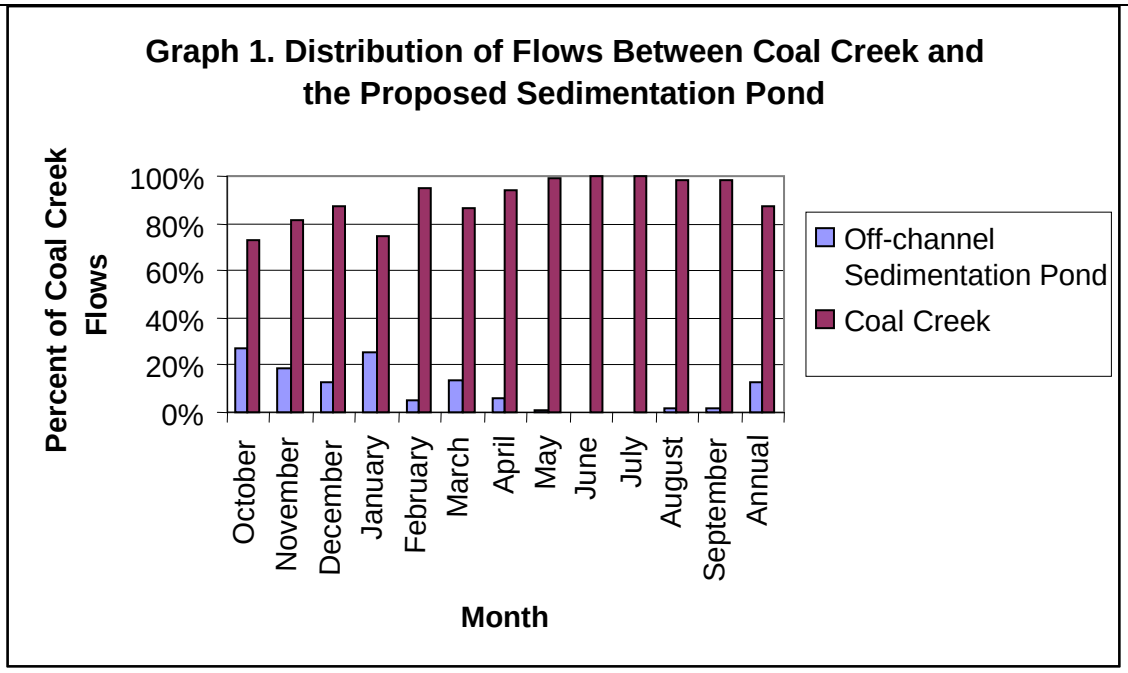

Most of the capture of suspended sediment is expected to occur during higher flows when the flows will overflow into the off-line sedimentation facility. An analysis was conducted using the recent stream gauge data and a suspended sediment rating curve that was developed by GeoEngineers in support of the Coal Creek Basin Plan. The suspended sediment rating curve was based on monitoring data collected at the site of the U.S. Geological Survey gauging station immediately upstream from the Newport Hills Tributary. The rating curve provides an estimate of suspended sediment transport rate (cubic yards per day) related to streamflow. Applying the sediment rating curve to measured streamflow provides a means to determine when most of the suspended sediment is expected to be transported, taking into account the magnitude of sediment transport and the duration of various flows. Results of the analyses are shown in **Graph 2**, indicating that most of the suspended sediment load tends to be transported at flows exceeding 25 to 30 cfs, supporting the targeted side-channel flow of 30 cfs.

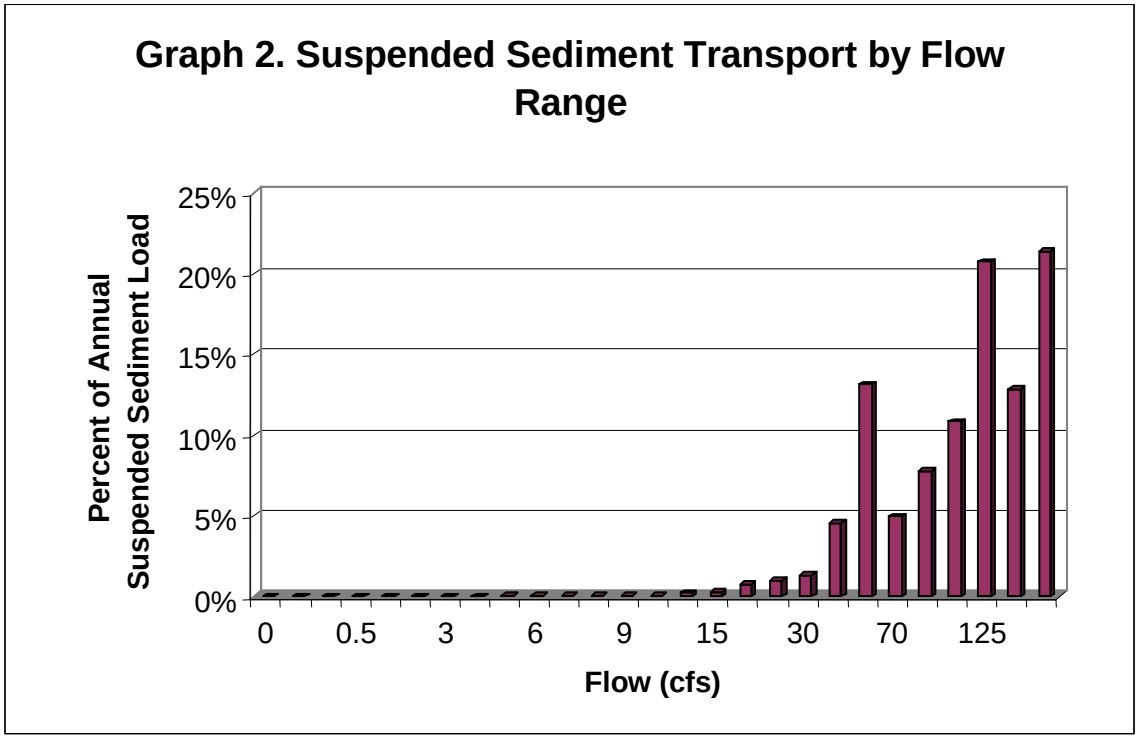

The off-line sediment pond has two primary components, consisting of the upstream inlet weir and the sediment pond outlet.

Upstream Inlet Weir. The inlet weir consists of four sets of stop logs held in place by vertically set I-beams. The stop logs will be adjustable such that the top of weir elevation can be raised or lowered as needed. Due to the transient nature of creek channels, it is important that the City of Bellevue be able to adjust the inlet weir in order to fine tune its operation. For example, the City may need to change the elevation of the inlet weir should the bed aggrade at the point of diversion and there is a need to redirect more flow back to the channel. Note that the need to adjust the inlet weir elevation makes it difficult to accommodate fish passage since the elevation at the creek's edge may need to be changed.

In addition, the inlet weir also includes a strainer and two sweeper logs. The description references to "upstream" and "downstream" are with respect to Coal Creek. The strainer log is set at the upstream end of the inlet weir, is attached to the upstream-most I-beam, and extends out into the creek in order to catch debris that floats down the creek, thereby preventing it from hanging up on the remainder of the weir. The sweeper logs will be placed at the center and at the downstream end of the inlet weir. The purpose of the sweeper logs is to help intercept and direct flows into the sedimentation pond. The sweeper logs will also tend to create localized scour, helping to maintain the depth at the main channel in addition to helping to suspend solids that can be swept into the sedimentation pond. Both the sweeper and the strainer logs will be constructed such that they can be adjusted in the future as adaptive management.

A log jam is also added directly across the creek from the inlet weir on the east side of the creek. The channel bank on the east side of the creek is not well defined. The log jam will help define the bank of the creek and direct flow towards the inlet weir.

A grade control log is proposed at the downstream end of the inlet structure. The grade control log is proposed to be buried in the creek such that the top of the log is at the thalwag elevation. The grade control is intended to help hold the grade of the upstream creek in place and prevent it from down cutting at the inlet weir. This will help ensure that the inlet operates, and continues to operate as designed.

Sediment Pond Outlet. The sediment pond outlet consists of a notched sill, a turning log, two log weirs and a grade control log. The objective of the notched sill is to help maintain a low flow channel to facilitate fish ingress and/or egress during low flow periods. The log weirs will back water up to help provide flow depth at the outlet. The turning log will help direct flow in the creek downstream. The grade control log will act in a similar manner as the one at the inlet weir. It will help hold the grade of the upstream creek in place and prevent it from down cutting at the outlet sill.

Bank protection in the form of large woody debris (LWD) will be placed along the bank opposite from the outlet from the sedimentation pond, and immediately downstream of the outlet. The bank protection is to ensure that flows leaving the pond do not create any erosion on the opposite bank. The streambank at the outlet is currently lined with large riprap.

Key Design Criteria. Several key factors were considered when deciding what would be used to construct the spillway: stability, creek hydrology, topographic limitations, and fish passage. Stability at the inlet is critically important because, if the inlet degrades or washes out, the creek channel could be permanently rerouted into the sediment pond. In addition, if the inlet washes out, it could create a large sediment slug that, depending on when the pond was last cleaned, may exceed the capacity of the sedimentation pond. Any sediment that is not trapped in the pond would flow downstream and could be damaging to existing habitat downstream of the project area.

Coal Creek is dominated by urban hydrology and as such is expected to be "flashy" in response to runoff from urban surfaces. What this means is that the flows can increase fairly rapidly and subside quickly. As a result, the flows overflowing onto the spillway entering the sedimentation pond can stop fairly quickly. This needs to be taken into consideration if fish passage is allowed up the spillway. Once flows drop below the overflow level, any fish trying to get up the spillway through a series of pools will be trapped until the next overflow event.

As stated above, the need to adjust the inlet weir elevation makes it difficult to accommodate fish passage since the elevation at the creek's edge may need to be changed. As a result of these factors, it was concluded that a concrete-lined spillway channel would provide the necessary stability and slope protection and would not have pools that could strand fish.

Maintenance of the pond is primarily associated with removal of accumulated sand and debris. Prior to maintenance, a City engineer or their designee will inspect the site to determine if any adjustments to the inlet or outlet are needed. A biologist will also inspect the site to determine if fish could potentially be in the pond. This could occur if portions of the pond near the outlet do not fill up with sand. Although they would have an exit route, any fish present within the pond would need to be removed and the outlet secured with a block net. Once any residual fish are removed, maintenance activities would commence. During maintenance, the crew will enter the pond via the gravel access road. Water remaining in the pond will be pumped into the woods. The crew will then excavate and dispose of the accumulated sediments from the pond. Excavation will be accomplished with an excavator and transported off-site with dump trucks. A City engineer or their designee will also inspect the site to determine if any adjustments to the inlet or outlet are needed. Construction and maintenance activities would occur during the WDFW in-water work window for Coal Creek in order to reduce potential impacts to salmonids. The WDFW in-water work window for Coal Creek extends from July 1 through September 15. Additional timing restrictions may be imposed by other agencies.

6b. Indicate the project category. (Check all that apply.) [help]

☐ Commercial ☐ Residential ☐ Institutional ☐ Transportation ☐ Recreational
☒ Maintenance ☐ Environmental Enhancement

6c. Indicate the major elements of your project. (Check all that apply.) [help]

☐ Aquaculture	☐ Culvert	☐ Float	☐ Road
☐ Bank Stabilization	☐ Dam / Weir	☐ Geotechnical Survey	☐ Scientific Measurement Device
☐ Boat House	☐ Dike / Levee / Jetty	☐ Land Clearing	☐ Stairs
☐ Boat Launch	☐ Ditch	☐ Marina / Moorage	☒ Stormwater facility
☐ Boat Lift	☐ Dock / Pier	☐ Mining	☐ Swimming Pool
☐ Bridge	☒ Dredging	☐ Outfall Structure	☐ Utility Line
☐ Bulkhead	☐ Fence	☐ Piling	
☐ Buoy	☐ Ferry Terminal	☐ Retaining Wall (upland)	
☒ Channel Modification	☐ Fishway		

☐ Other: _____

6d. Describe how you plan to construct each project element checked in 6c. Include specific construction methods and equipment to be used. [help]

- Identify where each element will occur in relation to the nearest waterbody.
- Indicate which activities are within the 100-year flood plain.

Please refer to the attached design drawings for the exact location of each project activity. Please refer to Table 8c for a list of project activities. The primary pieces of equipment will be an excavator, back-hoe, and dump truck.

6e. What are the start and end dates for project construction? (month/year) [help]

- If the project will be constructed in phases or stages, use JARPA Attachment D to list the start and end dates of each phase or stage.

Start date: July 1, 2010 End date: September 1, 2010 ☐ See JARPA Attachment D

6f. Describe the purpose of the work and why you want or need to perform it. [help]

The City of Bellevue has been mandated per a legal settlement agreement to undertake a number of projects in order to reduce the amount of sediment that accumulates at the delta of Coal Creek at Newport Shores. One of the required projects is a sediment pond that has the capacity to capture 1500 cubic yards of sediment on an annual basis. This project is part of a larger effort to control sediment erosion, transport, and deposition resulting from past coal mine and other watershed activities. This effort, referred to as the Coal Creek Stabilization Program, has the following primary objectives as outlined in the *Coal Creek Stabilization Program Draft Environmental Impact Statement – Volume 2 Technical Appendices*:

- Reduce sediment supply to Coal Creek and Lake Washington to a level expected for an undisturbed, or natural, condition.
- Stabilize the Coal Creek system to ensure the success of future restoration efforts.
- Minimize the potential for flooding that may be associated with excessive sedimentation.
- Improve water quality by minimizing erosion and sediment transport.

6g. Fair market value of the project, including materials, labor, machine rentals, etc. [help]

$700,000

6h. Will any portion of the project receive federal funding? [help]

- **If yes**, list each agency providing funds.

☐ Yes ☒ No ☐ Don't know

Part 7–Wetlands: Impacts and Mitigation

☒ Check here if there are wetlands or wetland buffers on or adjacent to the project area.
(If there are none, skip to Part 8.)

7a. Describe how the project has been designed to avoid and minimize adverse impacts to wetlands. [help]

☐ Not applicable

7b. Will the project impact wetlands? [help]

☒ Yes ☐ No ☐ Don't know

7c. Will the project impact wetland buffers? [help]

☒ Yes ☐ No ☐ Don't know

7d. Has a wetland delineation report been prepared? [help]

- **If yes**, submit the report, including data sheets, with the JARPA package.

☒ Yes ☐ No

7e. Have the wetlands been rated using the Western Washington or Eastern Washington Wetland Rating System? [help]

- **If yes**, submit the wetland rating forms and figures with the JARPA package.

☒ Yes ☐ No ☐ Don't know

7f. Have you prepared a mitigation plan to compensate for any adverse impacts to wetlands? [help]

- **If yes**, submit the plan with the JARPA package.

☒ Yes ☐ No ☐ Not applicable

7g. Use the table below to list the type and rating of each wetland that will be impacted; the extent and duration of the impact; and the type and amount of compensatory mitigation proposed. If you are submitting a compensatory mitigation plan with a similar table, you may simply state (below) where we can find this information in the mitigation plan. [help]

Activity causing impact (fill, drain, excavate, flood, etc.)	Wetland type and rating category[1]	Impact area (sq. ft. or acres)	Duration of impact[2]	Proposed mitigation type[3]	Wetland mitigation area (sq. ft. or acres)
Pond construction	PEM IV	255 SF Permanent	Permanent	5.2:1 Enhancement for Permanent Impacts + 1:1 Restoration for Temporary Impacts. Total Permanent impact = 987 SF (0.02 AC). Total Temporary impact = 146 SF (0.01 AC). Total Mitigation = 0.17 AC. See Sheet 1 of the attached mitigation plan.	
Downstream log jam	PFO/PSS III	146 SF Temporary + 732 SF Permanent	Permanent + Temporary		

[1] Ecology wetland category based on current Western Washington or Eastern Washington Wetland Rating System. Provide the wetland rating forms with the JARPA package.

[2] Indicate the time (in months or years, as appropriate) the wetland will be measurably impacted by the activity. Enter "permanent" if applicable.

[3] Creation (C), Re-establishment/Rehabilitation (R), Enhancement (E), Preservation (P), Mitigation Bank/In-lieu fee (B)

Page number(s) for similar information in the mitigation plan, if available: Sheet 1, plus additional details in Critical Areas Report.

7h. For all filling activities identified in 7g., describe the source and nature of the fill material, the amount in cubic yards that will be used, and how and where it will be placed into the wetland. [help]

Fill material to be placed in the Category III wetland (Wetland 1) includes logs and boulders associated with the downstream log jam. Note, this area was delineated by others; but based on a site visit by DEA, this specific portion of the "wetland" is dominated by uplands plants. Method of construction will be excavator.

7i. For all excavating activities identified in 7g., describe the excavation method, type and amount of material in cubic yards you will remove, and where the material will be disposed. [help]

The Category IV wetland (Wetland 2) will be completely excavated. This small 255 SF Category IV PEM wetland is dominated by creeping buttercup and giant horsetail.

7j. Summarize what the compensatory mitigation plan is meant to accomplish, and describe how a watershed approach was used to design the plan. [help]

Permanent wetland impacts will be mitigated for by enhancing existing wetland at Site 2. Site 2 is located at river mile 0.9 or approximately 0.5 mile downstream of the project site where the original in-line sediment pond was previously proposed. The goal is to increase wetland structure by removing non-native species (Himalayan blackberry and reed canarygrass) and planting native species within this off-site wetland referred to as Wetland A. Wetland A is a Category III palustrine forested wetland with an overstory dominated by red alder. Increasing structural diversity of the understory will improve wildlife habitat within the Coal Creek corridor.

Part 8–Waterbodies (other than wetlands): Impacts and Mitigation

In Part 8, "waterbodies" refers to non-wetland waterbodies. (See Part 7 for information related to wetlands.) [help]

☒ Check here if there are waterbodies on or adjacent to the project area. (If there are none, skip to Part 9.)

8a. Describe how the project is designed to avoid and minimize adverse impacts to the aquatic environment. [help]

☐ Not applicable

The City of Bellevue previously proposed to construct an in-line sediment pond upstream of I-405 at approximate RM 0.9, or approximately 0.5 mile downstream of the proposed off-line facility. The off-line facility concept is in lieu of the in-line facility and addresses agency concerns regarding water quality, fish passage within the mainstem, spawning habitat, and construction and maintenance concerns. These potential concerns have been eliminated or significantly reduced by the proposed off-line sediment pond. Mitigation is proposed to off-set potential project-related impacts.

In summary, the key benefits of the off-line facility as opposed to an in-line facility are as follows:

1. The off-line facility is designed to engage only during higher flows when most of the sediment is being transported. During summer months, the facility will rarely engage; when it does, there will be a significant stream flow. As a result, the potential effects of warming Coal Creek during low flows will be avoided.
2. The facility will primarily affect the suspended sediment rather than the bedload. This is seen as a benefit since the finer material is what impacts spawning gravels, and is also transported all the way to the delta where it has contributed to sedimentation problems.
3. The off-line facility will create some flood storage and will help to reduce flood flows.
4. The facility will maintain a connection at the downstream end (the outlet from the off-line sedimentation pond) and will allow the pond to provide rearing habitat in addition to refuge habitat during some flows.

Potential impacts to fish, wildlife, and water quality could occur during either construction or maintenance activities. The combined size of both parcels is 3.08 acres but clearing is limited to the smallest area possible. The area to be cleared for construction of the pond is 0.75 acre, of which 0.14 will be impervious surface. Potential impacts associated with either construction or maintenance can be reduced or avoided by implementation of the conservation and performance measures outlined below.

Conservation and Performance Measures

General

- A TESC Plan will be developed and implemented.
- A qualified Erosion and Control Inspector will review all sediment control measures twice per week during construction. Qualified means the inspector will be a CESCL.
- Turbidity will be monitored per the Turbidity Monitoring Plan outlined in **Appendix G** of the Critical Areas Report.
- A Spill Prevention Control and Countermeasures plan that meets Ecology standards will be developed and implemented for the project to ensure that all pollutants and products will be controlled and contained.
- Seasonal restrictions applied to work conducted below the OHWM will be as required by a project-specific HPA issued by the WDFW.
- Construction impacts will be confined to the minimum area necessary to complete the project.
- Removal of riparian vegetation will be minimized as much as possible.
- Implementation of the Mitigation Plan outlined in **Appendix E** of the Critical Areas Report will occur.

Water Quality/Erosion Control

- All BMPs will be installed according to City of Bellevue standards and will be inspected and maintained throughout the life of the project.
- Staging and soil stockpile areas will be limited to those outlined in the clearing and grading permit. Staging areas will be fenced.
- Spill kits will be kept on-site.
- Fuels and other potentially hazardous materials will be kept in a secured area. Secured means fenced, and locked during non-work hours.
- Secondary containment will be required for all hazardous materials. Spill containment is required for generators, parked equipment, porta-potty, fuels, solvents, etc.
- The project will comply with water quality conditions identified by Ecology.
- Wash water resulting from wash down of equipment or work areas will be contained for proper treatment and/or disposal, and will not be directly discharged into state waters.
- There will be no discharge of oil, fuels, or chemicals to surface waters, or onto land where there is a potential for reentry into surface waters.
- No cleaning solvents or chemicals used for tools or equipment cleaning will be discharged to ground or surface waters.
- The contractor will regularly check fuel hoses, oil drums, oil or fuel transfer valves, fittings, etc. for leaks, and will maintain and store materials properly to prevent spills.
- BMPs will be used on all project activities to control and prevent sediments from entering aquatic systems.

In-water and Over-water Work

- All fish will be removed from the work area prior to any in-water work activities per the Fish Salvage Plan in **Appendix F** of the Critical Areas Report.
- Materials removed from below the OHWM, will be placed in an upland location where they cannot enter water bodies.
- Materials, such as riprap and LWD, placed within the water, will be free of sediment and or other contaminants.
- Water pumped from work isolation areas will be treated to remove suspended sediments prior to returning to the water body. Discharge will occur in such a manner as not to cause erosion.
- Mechanical equipment will not enter the stream channel until the project area has been dewatered and fish salvage has been completed.
- Mechanical equipment operating in the project area will be inspected daily for leaks. Any equipment found to be leaking will immediately be fixed or removed from the project site.

Operational and Maintenance

- The pond will be inspected during and immediately after significant storm events.
- Prior to annual pond cleaning (sand removal), a city engineer and biologist will inspect the site to determine the level of required maintenance.
- A biologist will perform fish salvage activities as needed during maintenance.
- Turbidity levels will be monitored during maintenance as outlined in **Appendix G** of the Critical Areas Report.
- Pond maintenance will occur during the WDFW in-water work window.
- If, for some unforeseen reason, work on the pond must occur outside the approved in-water work window, these actions will be coordinated with the WDFW and Corps.

8b. Will your project impact a waterbody or the area around a waterbody? [help]

☒ Yes ☐ No

8c. Summarize impact(s) to each waterbody in the table below. [help] **Please refer to the attached design drawings for a graphic representation of the activities outlined below.**

Activity causing impact (clear, dredge, fill, pile drive, etc.)	Impact location[1]	Duration of impact[2]	Amount of material to be placed in or removed from waterbody	Area (sq. ft. or linear ft.) of waterbody directly affected	Materials removed	Materials added
Diversion weir structure	In waterbody	Permanent	13 CY (removed and replaced)	35 LF	Native streambank	Cast-in-place reinforced concrete, steel I-beams, weir plates, bedding material, and streambed gravel.
Upper log jam	In waterbody	Permanent	3 CY removed, 3.5 CY replaced	55 LF	Native streambed / bank	Boulders and streambed gravel
Lower log jam	In waterbody	Permanent	3 CY removed, 3.5 CY replaced	40 LF	Native streambed / bank	Boulders and streambed gravel
Sweeper log (2)	In waterbody	Permanent	0 CY (cantilevered over waterbody)	5 LF	n/a	n/a
Strainer log	In waterbody	Permanent	0 CY (cantilevered over waterbody)	5 LF	n/a	n/a
Upper bank logs (2)	In waterbody	Permanent	2 CY (removed and replaced)	30 LF	Native streambank	Streambed gravel
Lower bank logs (4)	In waterbody	Permanent	2 CY (removed and replaced)	52 LF	Rockery and native streambank	Streambed gravel
Upper grade control	In waterbody	Permanent	10 CY (removed and replaced)	30 LF	Native streambed	Streambed gravel
Lower grade control	In waterbody	Permanent	10 CY (removed and replaced)	30 LF	Native streambed	Streambed gravel
Turning log (1)	In waterbody	Permanent	0 CY (removed and replaced)	15 LF	n/a	n/a
Outlet sill logs (3)	In waterbody	Permanent	33 CY (removed and replaced)	45 LF	Rockery and native streambed	Streambed gravel
Upper log v-weir	In waterbody	Permanent	27 CY (removed and replaced)	36 LF (perpendicular to stream)	Native streambed	Streambed gravel
Lower log v-weir	In waterbody	Permanent	31 CY (removed and replaced)	42 LF	Native streambed	Rebar, streambed gravel
V-weir drop pools (2)	In waterbody	Permanent	39 CY removed and 27 CY replaced	264 SF	Native streambed	Streambed gravel
Inlet streambed	In waterbody	Permanent	28 CY removed and 110 CY replaced	750 SF	Native streambed	Streambed gravel
Outlet streambed	In waterbody	Permanent	66 CY removed and 110 CY replaced	1900 SF	Native streambed	Streambed gravel
Outlet excavation	In waterbody	Permanent	25 CY removed	35 LF	Native streambed / bank	Streambed gravel
Sheet pile	Adjacent to OWMH	Permanent	0 CY added, 0 CY removed	75 LF	n/a	Plastic or steel sheet pile

[1] Indicate whether the impact will occur in or adjacent to the waterbody. If adjacent, provide the distance between the impact and the waterbody and indicate whether the impact will occur within the 100-year flood plain.

[2] Indicate the time (in months or years, as appropriate) the waterbody will be measurably impacted by the work. Enter "permanent" if applicable.

8d. Have you prepared a mitigation plan to compensate for the project's adverse impacts to non-wetland waterbodies? [help]

- **If yes**, submit the plan with the JARPA package.

☒ Yes ☐ No ☐ Not applicable

8e. Summarize what the compensatory mitigation plan is meant to accomplish. Describe how a watershed approach was used to design the plan.

- If you already completed 7j., you do not need to restate your answer here. [help]

The mitigation plan has been designed to restore all on-site areas disturbed during construction except for access routes and the interior of the pond below the 94-foot elevation. The area below the 94-foot elevation will be excavated of sand and silt on an annual basis. The mitigation plan will enhance specific areas that lack native vegetation, contain non-native species, or contain native trees but lack native understory vegetation. Off-site mitigation (downstream) is also proposed. The mitigation plan will increase the diversity and density of native vegetation in order to improve wildlife habitat, streamside shade, and improve stream-related processes. The mitigation plan also includes snags and downed wood to further enhance wildlife habitat. Please refer to the Critical Areas Report and Mitigation Plan for additional details.

8f. For all activities identified in 8c., describe the source and nature of the fill material, amount (in cubic yards) you will use, and how and where it will be placed into the waterbody. [help]

Please refer to Table 8c.

8g. For all excavating or dredging activities identified in 8c., describe the method for excavating or dredging, type and amount of material you will remove, and where the material will be disposed. [help]

The method of construction will be with an excavator and back-hoe. Please refer to Table 8c for type and amount of material to be removed and installed per each activity.

Part 9–Additional Information

Any additional information you can provide helps the reviewer(s) understand your project.

9a. If you have already worked with any government agencies on this project, list them below. [help]

Agency Name	Contact Name	Phone	Most Recent Date of Contact
Corps of Engineers	Jacalen Printz	206.764.6901	2/3/09 (meeting), 5/20/09 (email)
Corps of Engineers	Amy Klein	206.766.6438	2/3/09 (meeting)
Corps of Engineers	Matt Bennett	206.764.3428	2/3/09 (meeting)
Ecology	Lori Lull	425.649.7271	2/3/09 (meeting)
Ecology	Bob Penhale	425.649.7074	2/3/09 (meeting), 5/20/09 (email)
WDFW	Larry Fisher	425.313.5683	2/3/09 (meeting), 5/20/09 (email)
Muckeshoot Tribe	Karen Walter	253.876.3116	2/3/09 (meeting), 5/20/09 (email)

9b. Are any of the wetlands or waterbodies identified in Part 7 or Part 8 on the Washington Department of Ecology's 303(d) List? [help]

- **If yes,** list the parameter(s) below.
- If you don't know, use Washington Department of Ecology's Water Quality Assessment tools at: http://www.ecy.wa.gov/programs/wq/303d/.

☒ Yes ☐ No

Coal Creek 2008 Water Quality Assessment

Parameter	Category	Station
Ammonia - N	1	Station 442@ RM 0.8 0 excursions out of 39 samples.
Temperature	2	Station 442 @ RM 0.8, criterion exceeded in 2002.
pH	2	Station 442 @ RM 0.8 a few excursions but limited data.
Dissolved Oxygen	5	Station 442 @ RM 0.8 at least 10 percent excursions
Fecal Coliform	5	Station 442 @ RM 0.8 standards not met 1998 – 2002.

9c. What U.S. Geological Survey Hydrological Unit Code (HUC) is the project in? [help]

- Go to http://cfpub.epa.gov/surf/locate/index.cfm to help identify the HUC.

6th Field Hydrologic Unit Code 171100120302

9d. What Water Resource Inventory Area Number (WRIA #) is the project in? [help]

- Go to http://www.ecy.wa.gov/services/gis/maps/wria/wria.htm to find the WRIA #.

Water Resource Inventory Area 8: Cedar – Sammamish Basin

9e. Will the in-water construction work comply with the State of Washington water quality standards for turbidity? [help]

- Go to http://www.ecy.wa.gov/programs/wq/swqs/criteria.html for the standards.

☒ Yes ☐ No ☐ Not applicable

9f. If the project is within the jurisdiction of the Shoreline Management Act, what is the local shoreline environment designation? [help]

- If you don't know, contact the local planning department.
- For more information, go to: http://www.ecy.wa.gov/programs/sea/sma/laws_rules/173-26/211_designations.html.

☐ Rural ☐ Urban ☐ Natural ☐ Aquatic ☐ Conservancy ☐ Other _____

9g. What is the Washington Department of Natural Resources Water Type? [help]

- Go to http://www.dnr.wa.gov/BusinessPermits/Topics/ForestPracticesApplications/Pages/fp_watertyping.aspx for the Forest Practices Water Typing System.

☐ S ☒ F ☐ Np ☐ Ns

9h. Will this project be designed to meet the Washington Department of Ecology's most current stormwater manual? [help]

- **If no**, provide the name of the manual your project is designed to meet.

☐ Yes ☒ No **n/a**

Name of manual: **n/a**

9i. If you know what the property was used for in the past, describe below. [help]

The site has been used as a residence for at least the last 50 years.

9j. Has a cultural resource (archaeological) survey been performed on the project area? [help]

- **If yes**, attach it to your JARPA package.

☒ Yes ☐ No

9k. Name each species listed under the federal Endangered Species Act that occurs in the vicinity of the project area or might be affected by the proposed work. [help]

Chinook salmon and steelhead trout. A biological assessment has been prepared for this project.

9l. Name each species or habitat on the Washington Department of Fish and Wildlife's Priority Habitats and Species List that might be affected by the proposed work. [help]

City of Bellevue Species of Local Importance

Common Name	Scientific Name	Note
Bald Eagle	*Haliaeetus leucocephalus*	Not present within project area. Suitable habitat includes shoreline areas along Lake Washington, which is located approximately 0.8 mile west of project area. The closest nest is approximately two miles northwest of the project area.
Peregrine Falcon	*Falco peregrinus*	Not present within project area. No suitable habitat present. The closest nest is approximately 1.7 mile northwest of the project area.
Common loon	*Gavia immer*	Not present within project area. No suitable habitat present.
Pileated woodpecker	*Dryocopus pileatus*	Likely within general project area, as suitable habitat is present.
Vaux's swift	*Chaetura vauxi*	Probably not present in general project area due to absence of mature or old growth forest.
Merlin	*Falco columbarius*	Probably not present within project area ; no sightings or core habitat. Uncommon in western Washington.
Purple martin	*Progne subis*	Probably not present within project area.
Western grebe	*Aechmophorus occidentalis*	Probably not present within project area.
Great blue heron	*Ardea herodias*	Observed in project area, foraging in Coal Creek.
Osprey	*Pandion haliaetus*	Not present within project area. Suitable habitat includes shoreline areas along Lake Washington, which is located approximately 0.8 mile west of project area.
Green heron	*Butorides striatus*	Possibly present within general project area.
Red-tailed hawk	*Buteo jamaicensis*	Potentially occasionally present in general project area, but not on-site.
Townsend's big-eared bat	*Corynorhinus townsendii*	Probably not present within project area due to the absence of caves, lava tubes, or abandoned buildings, but could occur further up the basin due to presence of abandoned Coal Mines.
Keen's myotis	*Myotis keeni*	Probably not present within project area. Found in low elevation forests but no data for King County.
Long-legged myotis	*Myotis volans*	Possibly within general project area, as suitable habitat is present and they have been documented in King County.
Long-eared myotis	*Myotis evotis*	Possibly within general project area as suitable habitat is present. They have not been documented in the Puget Sound region.
Oregon spotted frog	*Rana pretiosa*	Not present within project area. No suitable habitat present.
Western toad	*Bufo boreas*	Probably not present within project area.
Western pond turtle	*Clemmys marmorata*	Not present within project area. No suitable habitat present.
Chinook salmon	*Oncorhynchus tshawytscha*	They have been documented, but very rarely, in reach below I-405. Use in project reach can not be ruled out, but is unlikely.
Bull trout	*Salvelinus confluentus*	Suitable habitat not present in Coal Creek.
Coho salmon	*Oncorhynchus kisutch*	Documented in Coal Creek and suitable habitat present.
River lamprey	*Lampetra ayresi*	Coal Creek is not typical habitat for this species, but can not be ruled out conclusively.

Part 10–Identify the Permits You Are Applying For

Use the resources and checklist below to identify the permits you are applying for.

- Online Project Questionnaire at http://apps.ecy.wa.gov/opas/.
- Governor's Office of Regulatory Assistance at (800) 917-0043 or help@ora.wa.gov.

10a. Compliance with the State Environmental Policy Act (SEPA). (Check all that apply.) [help]

- For more information about SEPA, go to www.ecy.wa.gov/programs/sea/sepa/e-review.html.

☐ A copy of the SEPA determination or letter of exemption is included with this application.

☒ A SEPA determination is pending with **City of Bellevue** (lead agency). The expected decision date is **fall 2009**.

☐ I am applying for a Fish Habitat Enhancement Exemption. (Check the box below in 10b.)

- Submit the Fish Habitat Enhancement Project form with this application. The form can be found at http://www.epermitting.wa.gov/Portals/_JarpaResourceCenter/images/default/fishenhancement.doc

☐ This project is exempt (choose type of exemption below).

☐ Categorical Exemption. Under what section of the SEPA administrative code (WAC) is it exempt? _____

☐ Other: _____

☐ SEPA is pre-empted by federal law. [help]

10b. Indicate the permits you are applying for. (Check all that apply.) [help]

LOCAL GOVERNMENT

Local Government Shoreline permits:

☐ Substantial Development ☐ Conditional Use ☐ Variance

☐ Shoreline Exemption Type (explain): _____

Other city/county permits:

☐ Floodplain Development Permit ☒ Critical Areas Ordinance

STATE GOVERNMENT

Washington Department of Fish and Wildlife:

☒ Hydraulic Project Approval (HPA) ☐ Fish Habitat Enhancement Exemption

Washington Department of Ecology:

☒ Section 401 Water Quality Certification

Washington Department of Natural Resources:

☐ Aquatic Resources Use Authorization

FEDERAL GOVERNMENT

United States Department of the Army permits (U.S. Army Corps of Engineers):

☒ Section 404 (discharges into waters of the U.S.) ☐ Section 10 (work in navigable waters)

United States Coast Guard permits:

☐ General Bridge Act Permit ☐ Private Aids to Navigation (for non-bridge projects)

Part 11–Authorizing Signatures

Signatures required before submitting the JARPA package.

11a. Applicant Signature (required) [help]

I certify that to the best of my knowledge and belief, the information provided in this application is true, complete, and accurate. I also certify that I have the authority to carry out the proposed activities, and I agree to start work only after I have received all necessary permits.

I hereby authorize the agent named in Part 3 of this application to act on my behalf in matters related to this application. _____ (initial)

By initialing here, I state that I have the authority to grant access to the property. I also give my consent to the permitting agencies entering the property where the project is located to inspect the project site or any work related to the project. _____ (initial)

_____ _____

Applicant Date

11b. Authorized Agent Signature [help]

I certify that to the best of my knowledge and belief, the information provided in this application is true, complete, and accurate. I also certify that I have the authority to carry out the proposed activities and I agree to start work only after all necessary permits have been issued.

_____ _____

Authorized Agent Date

11c. Property Owner Signature (if not applicant) [help]

I consent to the permitting agencies entering the property where the project is located to inspect the project site or any work. These inspections shall occur at reasonable times and, if practical, with prior notice to the landowner.

_____ _____

Property Owner Date

18 U.S.C §1001 provides that: Whoever, in any manner within the jurisdiction of any department or agency of the United States knowingly falsifies, conceals, or covers up by any trick, scheme, or device a material fact or makes any false, fictitious, or fraudulent statements or representations or makes or uses any false writing or document knowing same to contain any false, fictitious, or fraudulent statement or entry, shall be fined not more than $10,000 or imprisoned not more than 5 years or both.

If you require this document in another format, contact The Governor's Office of Regulatory Assistance (ORA). People with hearing loss can call 711 for Washington Relay Service. People with a speech disability can call (877) 833-6341.
ORA publication number: ENV-019-09

CITY OF BELLEVUE
LOWER COAL CREEK
OFF-LINE SEDIMENT POND
CRITICAL AREAS REPORT

King County, Washington

Prepared For:
CITY OF BELLEVUE
450 110th Avenue NE
PO Box 90012
Bellevue, WA 98009

Prepared By:
DAVID EVANS AND ASSOCIATES, INC.
415 - 118th Avenue SE
Bellevue, WA 98005-3553

RWBA0000-0010

August 2009

CITY OF BELLEVUE
LOWER COAL CREEK
OFF-LINE SEDIMENT POND
CRITICAL AREAS REPORT

King County, Washington

Prepared For:
CITY OF BELLEVUE
450 110th Avenue NE
PO Box 90012
Bellevue, WA 98009

Prepared By:
DAVID EVANS AND ASSOCIATES, INC.
415 - 118th Avenue SE
Bellevue, WA 98005-3553

Prepared by:

Scott Swarts
Sr. Fish and Wildlife Biologist

RWBA0000-0010

August 2009

TABLE OF CONTENTS

1.0 INTRODUCTION 1

2.0 PROJECT DESCRIPTION 5
2.1 Project History 5
2.2 Site Selection 5
2.3 Design Summary 8
2.4 Methods 13
2.4.1 Preliminary Data Gathering and Review 13
2.4.2 Field Investigation 14

3.0 RESULTS 15
3.1 Preliminary Data Gathering and Review 15
3.1.1 WDFW PHS Data 15
3.1.2 WDNR NHP Data 15
3.1.3 Streams 16
3.1.4 Wetlands 25
3.1.5 U.S. Department of Agriculture Soil Data 28
3.1.6 Amphibians and Reptiles 29
3.1.7 Mammals 30
3.1.8 Birds 31
3.1.9 Federally Listed Species 33
3.1.10 Floodplains 33
3.1.11 Habitat Associated with Species of Local Importance 35
3.1.12 Geologic Hazard Areas 36
3.2 Field Assessment 36
3.2.1 Coal Creek 36
3.2.2 Unnamed Tributary to Coal Creek 45
3.2.3 Wildlife 46

4.0 HABITAT IMPACTS 47
4.1 Wetland Functions Analysis 49
4.2 Salmonid Habitat Effects Matrix 51
4.3 Impacts to Species of Local Importance 52
4.3.1 Great Blue Heron 52
4.3.2 Coho Salmon. 53
4.3.3 Pileated Woodpecker. 53
4.3.4 Chinook Salmon. 53
4.3.5 Long-legged Myotis. 54
4.3.6 Long-eared Myotis. 54
4.3.7 Townsend's Big-eared Bat 54
4.3.8 Red Tailed Hawk. 54
4.3.9 Bald Eagle. 54
4.3.10 Green Heron 54
4.3.11 Vaux's Swift 55
4.4 Water Quality Impacts 55
4.4.1 Conservation and Performance Measures 55

5.0 MITIGATION 57

6.0 REFERENCES 58

LIST OF TABLES

Table 1: Parcel Summary for 125th Avenue SE 7
Table 2: Impact Summary 11
Table 3: Functional Value Assessment 14
Table 4: Rare Plants of King County 15
Table 5: Coal Creek 2008 Water Quality Assessment 20
Table 6: Matrix of Pathways and Indicators Summary 21
Table 7: Coal Creek Fish Use Summary 22
Table 8: Wetland Summary 25
Table 9: Existing Wetlands Functional Value Summary 27
Table 10: Amphibians and Reptiles 30
Table 11: Mammal Record Summary for T24N R05E 30
Table 12: Breeding Bird Summary for T24N R05E 32
Table 13: Species of Local Importance 35
Table 14: Stream Survey Summary 44
Table 15: Project Area Wildlife Observations 47
Table 16: Wetlands Impact Summary 48
Table 17: Stream Impact Summary 48
Table 18: Wetland Function Summary 50
Table 19: Salmonid Habitat Project Effects Matrix 51

LIST OF FIGURES

Figure 1: Vicinity Map 2
Figure 2: Site Map 3
Figure 3: Aerial Photograph 4
Figure 4: Stream Map 17
Figure 5: Coal Creek and May Creek Comparison 18
Figure 6: National Wetland Inventory Map 26
Figure 7: Soil Survey – King County Area 29
Figure 8: FEMA Map 34
Figure 9: Site Photos 37

APPENDICES

Appendix A – Site Plan
Appendix B – Jones & Stokes Wetland Report
Appendix C – Cooke Wetland Functional Assessment
Appendix D – Wolman Pebble Counts
Appendix E – Wetland Mitigation Plan
Appendix F – Turbidity Monitoring Plan
Appendix G – Fish Salvage Plan

ACRONYMS

BFW	bankfull width
CESCL	Certified Erosion and Sediment Control Lead
Cfs	cubic feet per second
Corps	U.S. Army Corps of Engineers
DEA	David Evans and Associates, Inc.
DP	Data plot
Ecology	Washington State Department of Ecology
EFH	Essential Fish Habitat
EPA	Environmental Protection Agency
ESA	Endangered Species Act
FEMA	Federal Emergency Management Agency
HGM	Hydrogeomorphic Model
HPA	Hydraulic Project Approval
I-405	Interstate 405
KCWLRD	King County Water and Land Resources Division
LWD	Large woody debris
Mm	millimeters
NMFS	National Marine Fisheries Service
NOAA	National Oceanic and Atmospheric Administration
NSO	natural sequence order
NWI	National Wetlands Inventory
NTU	Nephelometric turbidity unit
OHWM	Ordinary High Water Mark
PEM	Palustrine emergent
PFO	Palustrine forested
PHS	Priority habitats and species
POW	Palustrine open water
RM	River Mile
SCS	Soil Conservation Service
TESC	Temporary Erosion and Sediment Control
TMDL	total maximum daily load
USDA	U.S. Department of Agriculture
USFS	U.S. Forest Service
USFWS	U.S. Fish and Wildlife Service
WDFW	Washington Department of Fish and Wildlife
WDNR	Washington State Department of Natural Resources
WSGA	Washington State Gap Analysis

This page intentionally left blank.

1.0 INTRODUCTION

At the request of the City of Bellevue, David Evans and Associates, Inc. (DEA) conducted this investigation to document the presence of critical areas, existing habitat conditions, level of potential wildlife use in the project vicinity, project-related impacts, and mitigation and monitoring requirements. This investigation also evaluated priority habitats and species (PHS) as identified by the Washington Department of Fish and Wildlife (WDFW) and federally-listed species under jurisdiction of either the U.S. Fish and Wildlife Service (USFWS) or the National Marine Fisheries Service (NMFS) that could occur in the project vicinity.

The proposed project site is located within the City of Bellevue, Washington (Section 16, Township 24 north, Range 05 east, W.M.) (**Figures 1, 2, and 3**). The proposed off-line sediment pond would be located on lower Coal Creek east of Interstate 405 (I-405), south/southwest of Coal Creek Parkway, at approximate river mile (RM) 1.4. Coal Creek is tributary to Lake Washington. The project site is in Water Resource Inventory Area 8: Cedar – Sammamish Basin. More specifically, the project site is within the Coal Creek Watershed, 6th Field Hydrologic Unit Code 171100120302, while the approximate latitude and longitude of the central project area is 47.56254° N by 122.17125° W at an elevation of approximately 111 feet above sea level.

The general project area is located on the McIntosh parcels (Parcel No. 1624059084 and 1624059190), which were recently purchased by the City of Bellevue and will become part of Coal Creek Park. Coal Creek Park is a 550-acre park that is owned by the City of Bellevue. This park is largely undeveloped and consists of third-growth forest in a steep ravine with approximately three miles of unpaved trails. The project site is located at 4641 125th Avenue SE, Bellevue, Washington 98006.

In summary, the project is the construction and operation of an off-line sediment pond designed to capture up to 1500 cubic yards of sand and silt on an annual basis. The off-line pond will function like a backwater channel that is always connected to Coal Creek at the outlet, which will allow for continuous fish passage. The inlet will only be engaged during storm events when water level rises above the inlet weir. The project includes clearing approximately 0.75 acre of land. Area to be cleared includes an existing house, structures, old cars, and accumulated debris. A total of 31 significant trees will be cleared as part of the project and 32 pieces of large wood debris (LWD) will be placed within two log jams in or immediately adjacent to the stream channel. The project will result in approximately 0.41 acre of permanent buffer impact and 0.37 acre of temporary buffer impact. The project includes 0.02 acre of permanent wetland impact and 0.01 acre of temporary wetland impact. Activities will also occur in Coal Creek resulting in approximately 0.17 acre of temporary impact, which includes work along the stream bank (inlet, outlet, and bank logs), and installation of log grade control structures, two weirs, and log jams. No impact to the unnamed tributary to Coal Creek that occurs to the north of the proposed pond will result from this project. Mitigation for project-related impacts is proposed to occur on- and off-site, and has been designed to provide a functional life for both fish and wildlife that utilize the Coal Creek basin. The project will result in a reduction in sediment impacts downstream of the project site and increase flood storage capacity. Numerous project elements are beneficial for fish including sediment reduction, LWD, and refugia and rearing habitat. Maintenance access roads have been included to both the inlet and outlet.

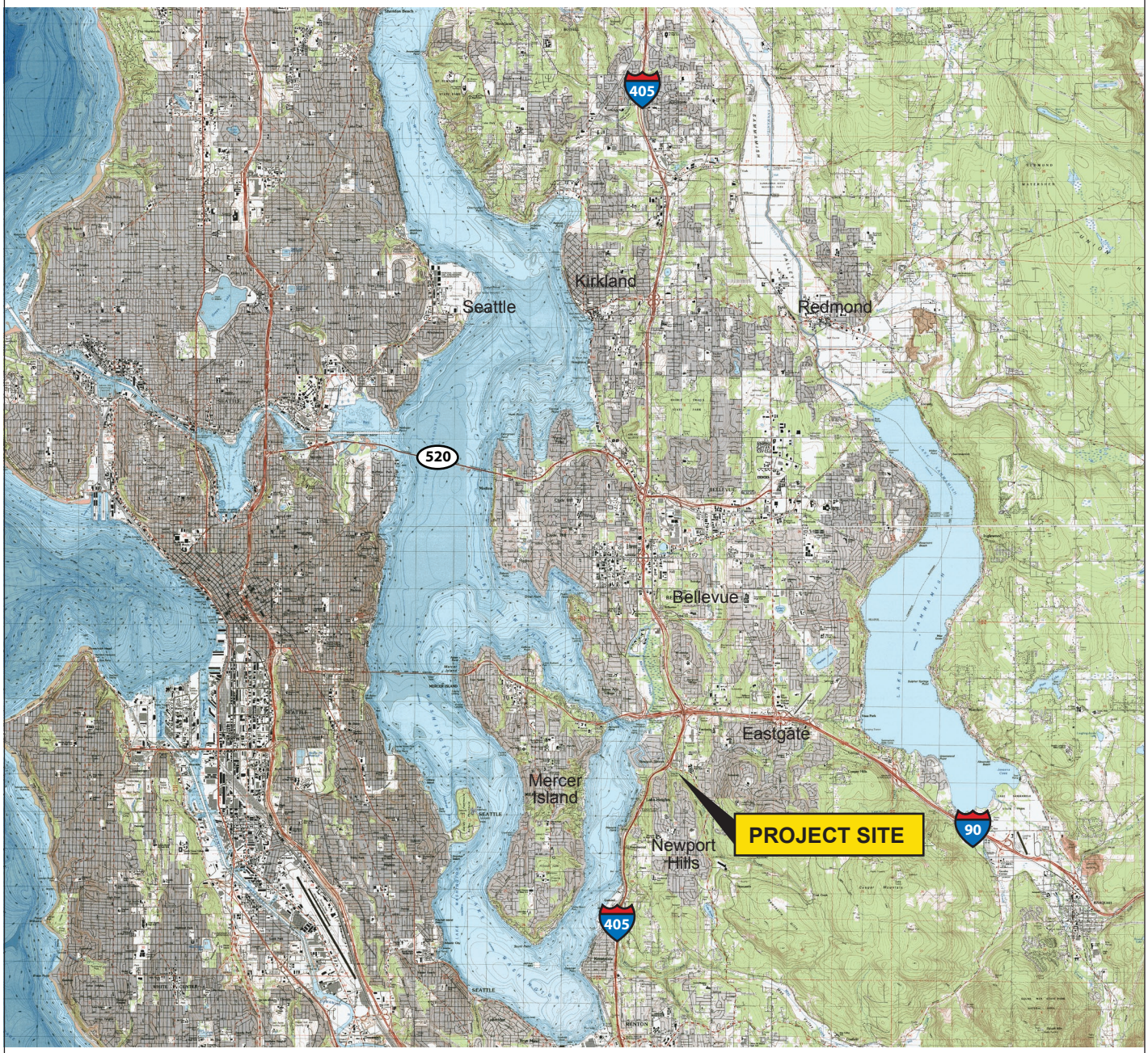

N

0 4000 Feet

Vicinity Map

City of Bellevue
Coal Creek Off-line Sediment Pond

RWBA0000-0010

July 2009

Figure 1

DAVID EVANS AND ASSOCIATES INC.

Gx1490

N

0 1 Mile

Site Map

City of Bellevue
Coal Creek Off-line Sediment Pond

RWBA0000-0010

July 2009

Figure 2

DAVID EVANS AND ASSOCIATES INC.

Gx1490

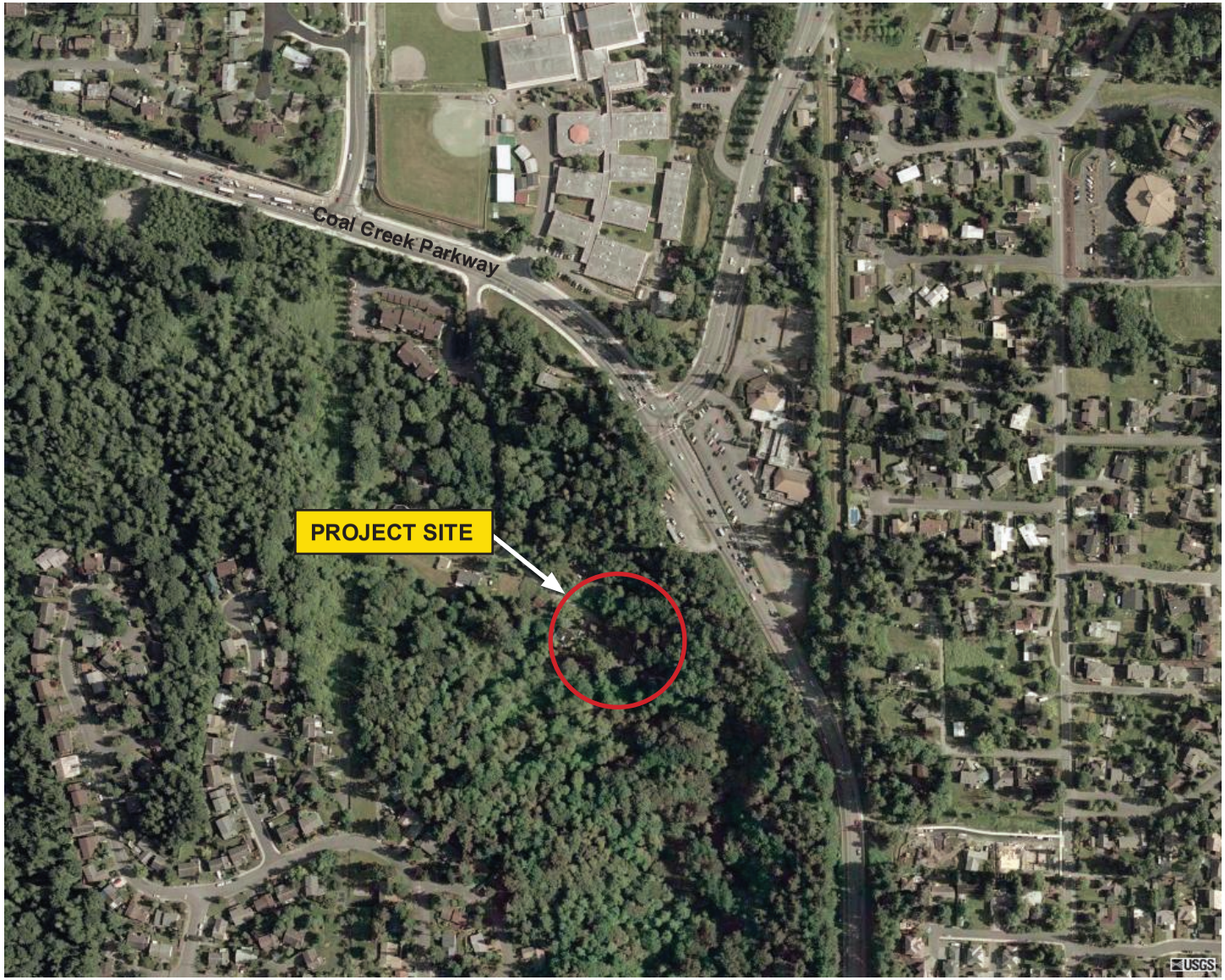

N

Not to Scale

Gx1490

Aerial Photograph

City of Bellevue
Coal Creek Off-line Sediment Pond

RWBA0000-0010

July 2009

Figure 3

DAVID EVANS AND ASSOCIATES INC.

2.0 PROJECT DESCRIPTION

2.1 PROJECT HISTORY

The City of Bellevue has been mandated per a legal settlement agreement to undertake a number of projects in order to reduce the amount of sediment that accumulates at the delta of Coal Creek at Newport Shores. One of the required projects is a sediment pond that has the capacity to capture 1500 cubic yards of sediment on an annual basis. This project is part of a larger effort to control sediment erosion, transport, and deposition resulting from past coal mine and other watershed activities. This effort, referred to as the Coal Creek Stabilization Program, has the following primary objectives as outlined in the *Coal Creek Stabilization Program Draft Environmental Impact Statement – Volumes 1 and 2* (Tetra Tech/KCM 2005):

- Reduce sediment supply to Coal Creek and Lake Washington to a level expected for an undisturbed, or natural, condition.
- Stabilize the Coal Creek system to ensure the success of future restoration efforts.
- Minimize the potential for flooding that may be associated with excessive sedimentation.
- Improve water quality by minimizing erosion and sediment transport.

The City of Bellevue previously proposed to construct an in-line sediment pond upstream of I-405 at approximate RM 0.9, or approximately 0.5 mile downstream of the proposed off-line facility. The off-line facility concept is in lieu of the in-line facility and addresses agency concerns regarding water quality, fish passage within the mainstem, spawning habitat, and construction and maintenance concerns. These potential concerns have been eliminated or significantly reduced by the proposed off-line sediment pond. Mitigation is proposed to off-set potential project-related impacts.

2.2 SITE SELECTION

Site selection criteria for the off-line sediment pond included the following:

1. **Operationally feasible location**. Operationally feasible means the site is located within the basin where sediment could be captured to meet project objectives. It would need to be located upstream of where deposition and flooding occurs, but low enough in the basin to maximize the potential capture of mobilized sediment. Flooding that causes the predominance of property damage and deposition generally occurs downstream of I-405 within Newport Shores. I-405 is located at approximate RM 0.8. The sediment pond must also be downstream of potential sites where catastrophic bank failure could occur in order to capture debris from such an event. The lower portion of the Coal Mine Hazard Area as mapped by the City of Bellevue is near RM 2.8.

2. **Technically feasible location**. Technically feasible means the site is situated where a pond could be built. A relatively straight reach is best for an in-line pond, while a large bend is best for an off-line facility. The site can not be constrained by existing infrastructure. Existing infrastructure includes bridges, pipelines, or facilities designed to protect these structures. Furthermore, the site or parcel needs to be large enough to accommodate a

sediment pond with a storage capacity of approximately 1500 cubic yards, and contain enough frontage along Coal Creek to be technically feasible.

3. **Land currently owned by the City of Bellevue**. Land currently owned by the City of Bellevue along Coal Creek includes Coal Creek Park. Coal Creek Park is located upstream of I-405, extending up to Lakemont Boulevard. Upstream of Lakemont Boulevard is additional parkland referred to as Cougar Mountain Regional Wildland Park. Although Coal Creek Park is large, existing access is relatively limited. Existing crossings include Coal Creek Parkway at approximate RM 2.0 and Lakemont Boulevard SE at approximate RM 4.4. An existing in-line sediment pond is located immediately upstream of the Coal Creek Parkway crossing, and Lakemont Boulevard is located upstream of a significant portion of the mapped Coal Mine Hazard Area.

4. **Land that could be purchased by the City of Bellevue**. Land that could be purchased by the City of Bellevue is limited to the reach between the mouth of Coal Creek and RM 1.4. All land downstream of I-405 (RM 0.8) is currently dominated by single family residential homes and part of Newport Shores.

5. **Minimal environmental constraints**. The site should be void of critical areas to the maximum extent possible and preferably already impacted by past land use activities. In order to further reduce impacts, pre-existing access should be available.

Based on the site selection criteria outlined above, a new sediment facility would need to be located between RM 0.8 and 2.8. Access constraints dictate a new facility that would need to be located between RM 0.8 and 1.4, or at RM 2.0 (Coal Creek Parkway). Since an existing facility is located upstream of Coal Creek Parkway and no access exists immediately downstream, this site is not a preferred location. Constructing a new off-line facility immediately downstream of Coal Creek Parkway would result in significant environmental impacts since the entire area is forested riparian habitat. Land between RM 0.8 and 1.4 includes city-owned parcels along the lower reach and residential parcels along the upper reach. The previous site for an in-line sediment pond was RM 0.9, which was an acceptable location for that type of facility and met the stated site selection criteria. However, constructing an off-line facility at this location would result in significant wetland impacts since it would need to be off-set from the main channel (unlike an in-line facility); plus, it is not ideal from an operational aspect since it is generally a linear section of stream in this reach. Land use between RM 0.9 and 1.4 is generally forested and lacks access except for a small section along 125th Avenue SE, which is located between RM 1.2 and 1.4. Due to the constraints outlined above, a new off-line facility should be located between RM 1.2 and 1.4.

There are nine parcels located along 125th Avenue SE that abut Coal Creek. Each parcel is split by Coal Creek. Land on the opposite side of Coal Creek is forested, while residences are along 125th Avenue SE. **Table 1** outlines existing data for each parcel. The data contained in **Table 1** is based on King County parcel viewer and iMAP.

Table 1: Parcel Summary for 125th Avenue SE

Parcel Number	Acres	Owner	Land Use	Site Feasibility
9559500000	3.02	Condos – Residential	Existing condos that abut both 125th Avenue SE and Coal Creek Parkway SE. Coal Creek Park is located to the west. Coal Creek cuts through the southwest corner of the parcel for approximately 150 linear feet.	Existing land use and limited frontage along Coal Creek negate this site from further consideration.
1624059080	1.42	Private – Single Family	Appears to be completely forested. Coal Creek Park is located to the west. A large, mostly square parcel. Coal Creek flows north/south through western third of parcel for approximately 130 linear feet.	Existing land use and limited frontage along Coal Creek negate this site from further consideration.
1624059081	1.35	Private – Single Family	Partially cleared on the east side with a large single-family house. Includes a small bridge over Coal Creek to a clearing on the west side. Coal Creek Park is located to the west. A long narrow parcel. Coal Creek flows north/south through western third of parcel for approximately 130 linear feet.	Limited frontage along Coal Creek negates this site from further consideration.
1624059207	1.28	Private – Single Family	Mostly cleared on the east side with a large single-family house. Coal Creek Park is located to the west and southwest. A long narrow parcel. Coal Creek flows north/south through western quarter of parcel for approximately 130 linear feet.	Limited frontage along Coal Creek negates this site from further consideration.
1624059082	3.00	Private – Single Family	Mostly cleared on the north side with a large single-family house. Coal Creek Park is located to the west and southwest. A large wedge shaped parcel. Coal Creek flows through the middle of this parcel for approximately 400 linear feet.	An off-line sediment pond could potentially be built on this parcel. However, it is not available, or at least not posted, for sale.
1624059205	0.49	Private – Single Family	Partially cleared on the north side with a small single-family house. Coal Creek Park is located to the southwest. A short narrow parcel. Coal Creek flows through the middle of this parcel for approximately 75 linear feet.	Limited frontage along Coal Creek negates this site from further consideration. Would need to obtain an adjoining parcel in order to make this site work.
1624059083	0.85	Private – Single Family	Mostly cleared on the north side with a small single-family house. Currently for sale. Coal Creek Park is located to the southwest. A long narrow parcel. Coal Creek flows through the middle of this parcel for approximately 110 linear feet.	Limited frontage along Coal Creek negates this site from further consideration. Would need to obtain an adjoining parcel in order to make this site work. Stream is linear in this reach, so an off-line pond would need to be longer and operation would be problematic.
1624059084	2.13	Private – Single Family	Partially forested with clearings. Same owner as parcel below. Includes a small single-family house and associated structures. Coal Creek Park is located to the southwest and about half the southeast side. A long narrow parcel. Coal Creek flows through the middle of this parcel for approximately 140 linear feet.	This site would work only if combined with the parcel below. Since the unnamed tributary was historically rerouted away from this site (existing GIS maps are outdated), additional stream impacts have been eliminated.
1624059190	0.95	Private – Single Family	Partially forested with clearings. Same owner as previous parcel. Abuts Coal Creek Park on three sides. This is the last parcel prior to parkland. Mapped as including an unnamed tributary to Coal Creek, but it has been re-routed. A wedge shaped parcel. Coal Creek flows through the middle of this parcel for approximately 220 linear feet.	This site would work only if combined with parcel above.

Based on the data contained in **Table 1**, potentially feasible sites include parcel 1624059082, and parcels 1624059084 and 1624059190 when combined (same owner). Negative elements associated with parcel 1624059082 include availability (not for sale); existing use (newer large home); and it is situated between other private single-family homes, and only continuous with existing parkland on the west and southwest edges.

The McIntosh parcels (1624059084 and 1624059190) recently became available to the City of Bellevue, and after a hydraulic and volumetric feasibility analysis showing that the project could work at this location while addressing most agency concerns regarding environmental impacts, the properties were purchased by the City. The combined size is approximately 3.08 acres with approximately 360 linear feet of Coal Creek frontage. The site is located where Coal Creek bends, and existing structures exist along the outside bend. It contains enough frontage along Coal Creek to construct an off-line pond. Another favorable factor with the McIntosh parcels is that they are located at the end of 125th Avenue SE. This is positive for two reasons. First, the addition of this land to City-owned Park is seamless or continuous with existing parkland. Second, a sediment pond located between two privately owned parcels may generate negative feedback from the adjoining parcels; whereas the McIntosh parcel is at the end of 125th Avenue SE and, therefore, isolated to the maximum extent possible. Based on the available data, the proposed site meets all the site selection criteria as outlined above to the maximum extent possible. No other sites that meet the site selection criteria are known to exist.

2.3 DESIGN SUMMARY

The project is defined as the construction and operation of an off-line sediment pond designed to capture up to a maximum of 1500 cubic yards on an annual basis. **Appendix A** contains a complete set of design drawings. The off-line channel will function like a backwater channel that is always connected to Coal Creek at the outlet. The inlet will only be engaged during storm events when water level rises above the inlet weir. Once engaged, flows leaving the creek will course down a concrete spillway to the permanent pool of the sedimentation pond, which is about 7 feet below the crest of the weir at the edge of the channel. Within the sedimentation pond, flows will slow, allowing much of the coarser suspended load to settle out. Flows exiting the sedimentation pond will rejoin Coal Creek approximately 350 feet downstream from where the overflow was diverted from the creek and function like a backwater channel that will always be connected to the main channel at the outlet.

The sedimentation pond is designed to be engaged only during high flow events when most of the sediment transport occurs. **Graph 1** shows the percentage of Coal Creek flows routed through the facility assuming overflow beginning around 30 cubic feet per second (cfs). The results shown are based on an analysis of stream flow data recorded by King County from 2002 to 2005. During the winter months, over 20 percent of the Coal Creek flows could be routed into the off-channel facility. However, the vast majority of the flow remains within Coal Creek itself. During the summer months, virtually all of the flow remains within Coal Creek.

Because the flows into the sedimentation pond are overflows, it will not be capturing bed load, but instead targeting sands and finer-grained material. According to GeoEngineers (letter from Mary Ann Reinhart to Jerry Scheller, May 17, 2006), 76 percent of the sediment that is retained at the Coal Creek delta is sand. So having a facility to target sands is appropriate. Also, when

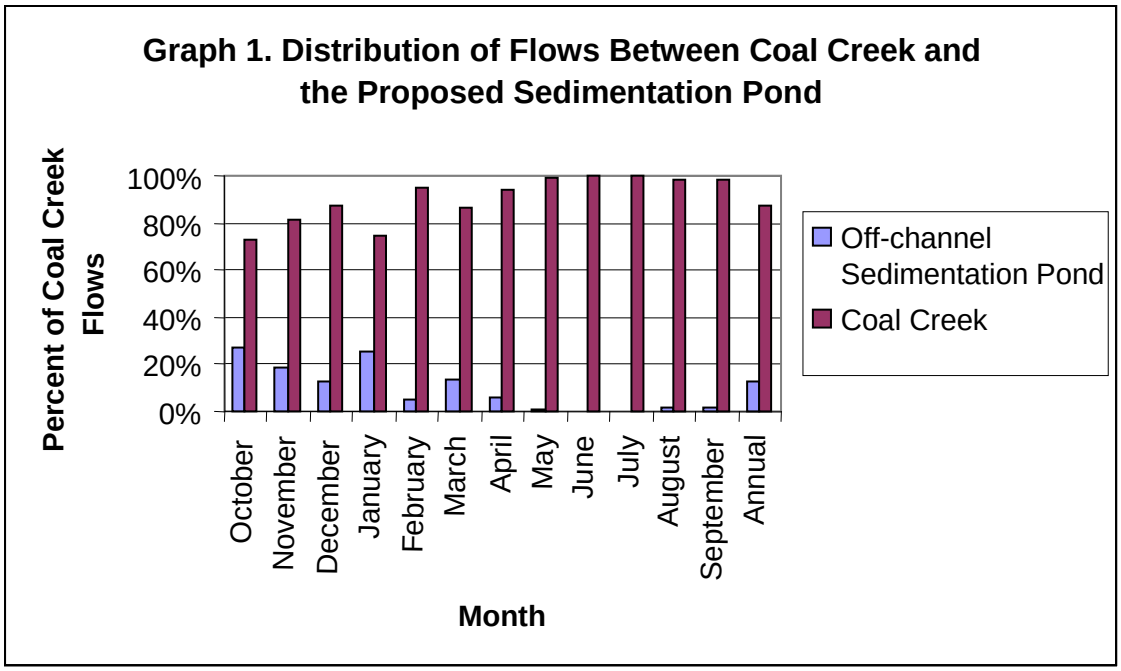

operating in conjunction with the upstream in-line sedimentation facility, which targets the larger bed material, the two sedimentation ponds target the full spectrum of material that has been shown to move through the creek to the delta.

Most of the capture of suspended sediment is expected to occur during higher flows when the flows will overflow into the off-line sedimentation facility. An analysis was conducted using the recent stream gauge data and a suspended sediment rating curve that was developed by GeoEngineers in support of the Coal Creek Basin Plan (King County and the City of Bellevue, 1986). The suspended sediment rating curve was based on monitoring data collected at the site of the U.S. Geological Survey gauging station immediately upstream from the Newport Hills Tributary. The rating curve provides an estimate of suspended sediment transport rate (cubic yards per day) related to streamflow. Applying the sediment rating curve to measured streamflow provides a means to determine when most of the suspended sediment is expected to be transported, taking into account the magnitude of sediment transport and the duration of various flows. Results of the analyses are shown in **Graph 2**, indicating that most of the suspended sediment load tends to be transported at flows exceeding 25 to 30 cfs, supporting the targeted side-channel flow of 30 cfs.

In summary, the key benefits of the off-line facility as opposed to an in-line facility are as follows:

1. The off-line facility is designed to engage only during higher flows when most of the sediment is being transported. During summer months, the facility will rarely engage; when it does, there will be a significant stream flow. As a result, the potential effects of warming Coal Creek during low flows will be avoided.

2. The facility will primarily affect the suspended sediment rather than the bedload. This is seen as a benefit since the finer material is what impacts spawning gravels, and is also transported all the way to the delta where is has contributed to sedimentation problems.

3. The off-line facility will create some flood storage and will help to reduce flood flows.

4. The facility will maintain a connection at the downstream end (the outlet from the off-line sedimentation pond) and will allow the pond to provide rearing habitat in addition to refuge habitat during some flows.

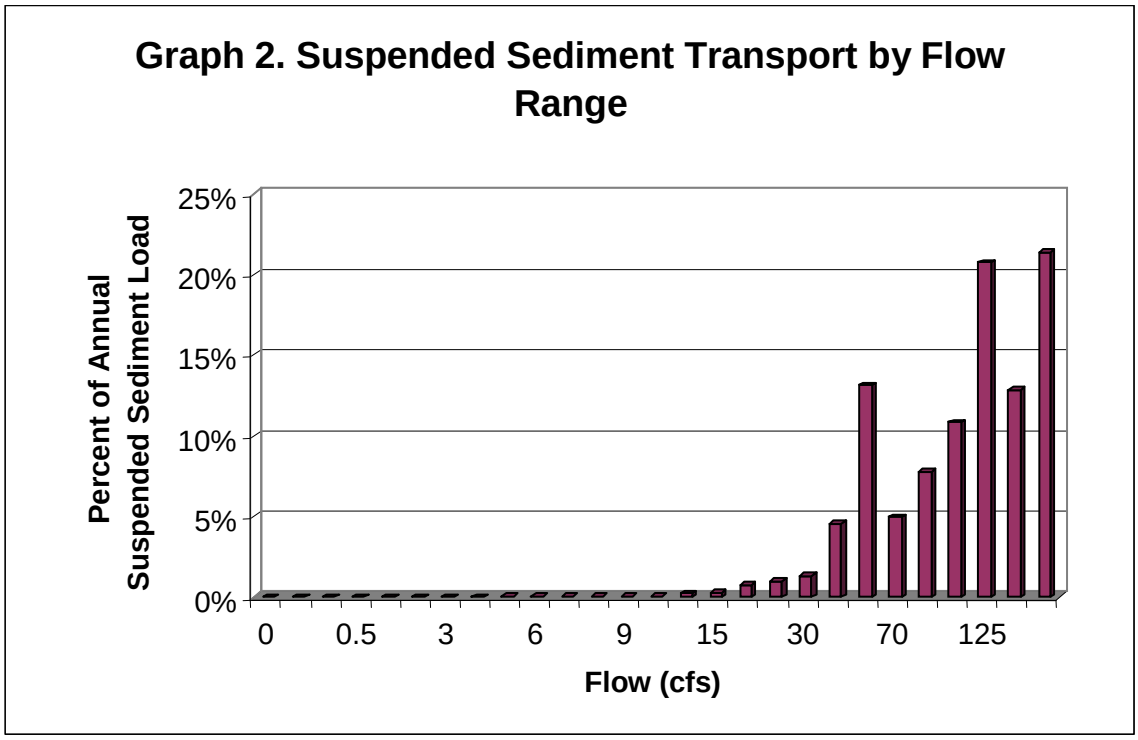

The off-line sediment pond has two primary components, consisting of the upstream inlet weir and the sediment pond outlet.

Upstream Inlet Weir. The upstream inlet weir consists of four sets of stop logs held in place by vertically set I-beams. The stop logs will be adjustable such that the top of weir elevation can be raised or lowered as needed. Due to the transient nature of creek channels, it is important that the City of Bellevue be able to adjust the inlet weir in order to fine tune its operation. For example, the City may need to change the elevation of the inlet weir should the bed aggrade near the inlet and there is a need to redirect more flow back to the channel. Note that the need to adjust the inlet weir elevation makes it difficult to accommodate fish passage since the elevation at the creek's edge may need to be changed.

In addition, the inlet weir also includes a strainer and two sweeper logs. The description references to "upstream" and "downstream" are with respect to Coal Creek. The strainer log is

set at the upstream end of the inlet weir, is attached to the upstream-most I-beam, and extends out into the creek in order to catch debris that floats down the creek, thereby preventing it from hanging up on the remainder of the weir. The sweeper logs will be placed at the center and at the downstream end of the inlet weir. The purpose of the sweeper logs is to help intercept and direct flows into the sedimentation pond. The sweeper logs will also tend to create localized scour, helping to maintain the depth at the main channel in addition to helping to suspend solids that can be swept into the sedimentation pond. Both the sweeper and the strainer logs will be constructed such that they can be adjusted in the future as adaptive management.

A log jam is also added directly across the creek from the inlet weir on the east side of the creek. The channel bank on the east side of the creek is not well defined. The log jam will help define the bank of the creek and direct flow towards the inlet weir.

A grade control log is proposed at the downstream end of the inlet structure. The grade control log is proposed to be buried in the creek such that the top of the log is at the thalwag elevation. The grade control is intended to help hold the grade of the upstream creek in place and prevent it from down cutting at the inlet. This will help ensure that the side-channel operates, and continues to operate as designed.

Sediment Pond Outlet. The sediment pond outlet consists of a notched sill, a turning log, two log weirs and a grade control log. The objective of the notched sill is to help maintain a low flow channel to facilitate fish ingress and/or egress during low flow periods. The log weirs will back water up to help provide flow depth at the outlet. The turning log will help direct flow in the creek downstream. The grade control log will act in a similar manner as the one at the inlet. It will help hold the grade of the upstream creek in place and prevent it from down cutting at the outlet sill. There will be an access road to the outlet to facilitate maintenance and maintain fish passage.

Bank protection in the form of LWD will be placed along the bank opposite from the outlet from the sedimentation pond. The bank protection is to ensure that flows leaving the pond do not create any erosion on the opposite bank.

Project Specifics. The project includes numerous small activities or actions. Each of these project actions are outlined in the attached design drawings and summarized below in **Table 2**.

Table 2: Impact Summary

Activity Causing Impact (clear, dredge, fill, pile drive, etc.)	Amount of Material Placed In or Removed	Area of Waterbody Directly Affected	Materials Removed	Materials Added
Inlet weir structure	13 CY (removed and replaced)	35 LF	Native streambank	Cast-in-place reinforced concrete, steel I-beams, weir plates, bedding material, and streambed gravel.
Upper log jam	3 CY removed, 3.5 CY replaced	55 LF	Native streambed / bank	Boulders and streambed gravel
Lower log jam	3 CY removed, 3.5 CY replaced	40 LF	Native streambed / bank	Boulders and streambed gravel
Sweeper log (2)	0 CY (cantilevered over waterbody)	5 LF	n/a	n/a
Strainer log	0 CY (cantilevered over waterbody)	5 LF	n/a	n/a
Upper bank logs (2)	2 CY (removed and replaced)	30 LF	Native streambank	Streambed gravel
Lower bank logs (4)	2 CY (removed and replaced)	52 LF	Rockery and native	Streambed gravel

Activity Causing Impact (clear, dredge, fill, pile drive, etc.)	Amount of Material Placed In or Removed	Area of Waterbody Directly Affected	Materials Removed	Materials Added
			streambank	
Upper grade control	10 CY (removed and replaced)	30 LF	Native streambed	Streambed gravel
Lower grade control	10 CY (removed and replaced)	30 LF	Native streambed	Streambed gravel
Turning log (1)	0 CY (removed and replaced)	15 LF	n/a	n/a
Outlet sill logs (3)	33 CY (removed and replaced)	45 LF	Rockery and native streambed	Streambed gravel
Upper log v-weir	27 CY (removed and replaced)	36 LF (perpendicular to stream)	Native streambed	Streambed gravel
Lower log v-weir	31 CY (removed and replaced)	42 LF	Native streambed	Rebar, streambed gravel
V-weir drop pools (2)	39 CY removed and 27 CY replaced	264 SF	Native streambed	Streambed gravel
Inlet streambed	28 CY removed and 110 CY replaced	750 SF	Native streambed	Streambed gravel
Outlet streambed	66 CY removed and 110 CY replaced	1900 SF	Native streambed	Streambed gravel
Outlet excavation	25 CY removed	35 LF	Native streambed / bank	Streambed gravel
Sheet pile	0 CY added, 0 CY removed	75 LF	n/a	Plastic or steel sheet pile

Key Design Criteria. Several key factors were considered when deciding what would be used to construct the spillway: stability, creek hydrology, topographic limitations, and fish passage. Stability at the inlet is critically important because, if the inlet degrades or washes out, the creek channel could be permanently rerouted into the sediment pond. In addition, if the inlet washes out, it could create a large sediment slug that, depending on when the pond was last cleaned, may exceed the capacity of the sedimentation pond. Any sediment that is not trapped in the pond would flow downstream and could be damaging to existing habitat downstream of the project area.

Coal Creek is dominated by urban hydrology and as such is expected to be "flashy" in response to runoff from urban surfaces. What this means is that the flows can increase fairly rapidly and subside quickly. As a result, the flows overflowing onto the spillway entering the sedimentation pond can stop fairly quickly. This needs to be taken into consideration if fish passage is allowed up the spillway. Once flows drop below the overflow level, any fish trying to get up the spillway through a series of pools will be trapped until the next overflow event.

As stated above, the need to adjust the inlet weir elevation makes it difficult to accommodate fish passage since the elevation at the creek's edge may need to be changed. As a result of these factors, it was concluded that a concrete-lined spillway channel would provide the necessary stability and slope protection and would not have pools that could strand fish.

Maintenance of the pond is primarily associated with removal of accumulated sand and debris. Prior to maintenance, a City engineer or their designee will inspect the site to determine if any adjustments to the inlet or outlet are needed. A biologist will also inspect the site to determine if fish could potentially be in the pond. This could occur if portions of the pond near the outlet do not fill up with sand. Although they would have an exit route, any fish present within the pond

would need to be removed and the outlet secured with a block net. Once any residual fish are removed, maintenance activities would commence. During maintenance, the crew will enter the pond via the gravel access road. Water remaining in the pond will be pumped into the woods. The crew will then excavate and dispose of the accumulated sediments from the pond. Excavation will be accomplished with an excavator and transported off-site with dump trucks. A City engineer or their designee will also inspect the site to determine if any adjustments to the inlet or outlet are needed. Construction and maintenance activities would occur during the WDFW in-water work window for Coal Creek in order to reduce potential impacts to salmonids. The WDFW in-water work window for Coal Creek extends from July 1 through September 15. Additional timing restrictions may be imposed by other agencies.

2.4 METHODS

2.4.1 Preliminary Data Gathering and Review

Existing literature and scientific data were reviewed to determine species distribution, habitat requirements, and other pertinent biological parameters specific to the project area. Published information about local critical areas was reviewed for evidence of wetlands, streams, and potential wildlife habitat. This report was prepared following the review of project plans, public domain resource data, and multiple site visits.

The USFWS was consulted for information on the known or possible occurrence of plants and animals listed under the federal Endangered Species Act (ESA) that could occur in King County. The WDFW PHS program (WDFW 2007) and the Washington State Department of Natural Resources (WDNR) Washington Natural Heritage Program (WDNR 2007) were consulted for documented occurrences of priority habitats or species, rare plants, and high quality native ecosystems in the project vicinity. Priority habitats include, but are not limited to, such features as wetlands, riparian areas, snag-rich areas, caves, cliffs, oak woodlands, rocky shorelines, and old-growth forests. Priority species are plants and animals listed by the state or federal government as endangered, threatened, sensitive, candidate, or species of concern. The potential use of the project area by mammals, birds, amphibians, and reptiles was investigated through review of Washington State Gap Analysis (WSGA) data. The information reviewed included:

- WDFW PHS data
- WDNR – Washington Natural Heritage Program data
- National Wetlands Inventory (NWI), Mercer Island Quadrangle, 1:24,000, United States Department of Interior – Fish and Wildlife Service, 1988
- United States Geological Survey mapping via National Geographic TOPO mapping software
- *Coal Creek Stabilization Program Draft Environmental Impact Statement – Volumes I and II*, prepared for the City of Bellevue Department of Utilities (Tetra Tech/KCM November 2005)
- City of Bellevue Sensitive Areas Notebook (April 1987)
- Sensitive Areas Map Folio, King County, Washington (1990)
- A Catalog of Washington Streams and Salmon Utilization – Volume 1 – Puget Sound Region. Washington Department of Fisheries (Williams et al. 1975)

- Salmon and Steelhead Habitat Limiting Factors Report for the Cedar – Sammamish Basin (Water Resource Inventory Area 8) (Kerwin 2001)
- Breeding Birds of Washington State – Location Data and Predicted Distributions (Smith et al. 1997)
- Terrestrial Mammals of Washington State – Location Data and Predicted Distributions (Johnson and Cassidy 1997)
- Amphibians and Reptiles of Washington State – Location Data and Predicted Distributions (Dvornich et al. 1997)
- United States Department of Agriculture – Soil Conservation Service: *Soil Survey of the King County Area*, Washington (1973)

Streams, wetlands, and their buffers are known to perform significant functions in the ecosystem, some of which are of immediate value to human society. Although these functions are complex, interrelated, and difficult to assess and quantify, the Semi-Quantitative Assessment Methodology (Cooke 2000) provides a rapid method for rating functions of wetlands and buffers. This rating method generates a relative score for up to eight wetland functions, including flood/storm water control, base flow/ground water support, erosion/shoreline protection (only used for riverine or lacustrine wetlands), water quality improvement, natural biological support, overall habitat function, specific habitat functions, and cultural/socioeconomic value. The relative score received for each function was broken down into a low, medium, or high level of function based on **Table 3**.

Table 3: Functional Value Assessment

General Functional Value	Functional Rating Raw Score							
	Flood/Storm Water Control	Base Flow	Erosion Shoreline Protection	Water Quality Imp.	Natural Biological Support	Overall Habitat Function	Specific Habitat Function	Cultural/ Socio-economic
Low	5 - 7	5 - 7	0 - 3	5 - 7	12 –19	3 -4	5 - 7	6 -9
Medium	8 – 11	8 – 11	4 – 6	8 – 11	20 – 28	5 – 7	8 – 11	10 – 14
High	12 - 15	12 - 15	7 - 9	12 - 15	29 - 36	8 - 9	12 - 15	15 - 18

2.4.2 Field Investigation

DEA performed multiple site visits on May 28 and July 23, 2009, to verify preliminary data findings, review previously delineated wetlands and ordinary high water mark (OHWM) of Coal Creek, conduct a stream survey, document existing habitat conditions and wildlife use, and look for potential mitigation opportunities.

3.0 RESULTS

3.1 PRELIMINARY DATA GATHERING AND REVIEW

3.1.1 WDFW PHS Data

The WDFW PHS data did not identify any priority wildlife heritage points or priority habitat points in the immediate vicinity of the project site. The riparian zone associated with Coal Creek in the project area is mapped as an urban natural open space and as such is considered a priority habitat. This is a relatively large polygon extending from I-405 to the headwaters of Coal Creek. Coal Creek is identified by the WDFW as containing priority anadromous and resident fish, including fall Chinook salmon (*Oncorhynchus tshawytscha*), coho salmon (*O. kisutch*), sockeye salmon (*O. nerka*), winter steelhead (*O. mykiss*), and resident cutthroat trout (*O. clarki*).

3.1.2 WDNR NHP Data

The WDNR – NHP reports that 26 rare plants occur in King County as of February 2009 (**Table 4**).

Table 4: Rare Plants of King County

Common Name	Scientific Name	State Status [1]	Federal Status [1]	Historic Record
Swamp Sandwort	*Arenaria paludicola*	X	LE	Yes
Stalked Moonwort	*Botrychium pedunculosum*	S	SC	No
Alaska Harebell	*Campanula lasiocarpa*	S	None	No
Bristly Sedge	*Carex comosa*	S	None	No
Large-awn Sedge	*Carex macrochaeta*	T	None	Yes
Few-flowered Sedge	*Carex pauciflora*	S	None	No
Long-styled Sedge	*Carex stylosa*	S	None	No
Clubmoss Cassiope	*Cassiope lycopodioides*	T	None	No
Golden Paintbrush	*Castilleja levisecta*	E	LT	Yes
Golden Chinquapin	*Chrysolepis chrysophylla*	S	None	No
Tall Bugbane	*Cimicifuga elata*	S	SC	Yes
Spleenwort-leaved goldthread	*Coptis aspleniifolia*	S	None	No
Toothed Wood Fern	*Dryopteris carthusiana*	R1	None	No
Black Lily	*Fritillaria camschatcensis*	S	None	No
Canadian St. John's-wort	*Hypericum majus*	S	None	No
Water Lobelia	*Lobelia dortmanna*	T	None	No
Bog Clubmoss	*Lycopodiella inundata*	S	None	Yes
Treelike Clubmoss	*Lycopodium dendroideum*	S	None	No
White Meconella	*Meconella oregana*	T	SC	Yes
Branching Montia	*Montia diffusa*	S	None	Yes
Texas toadflax	*Nuttallanthus texanus*	S	None	Yes
Choris' Bog-orchid	*Platanthera chorisiana*	T	None	No
White-top Aster	*Sericocarpus rigidus*	S	SC	No
Humped Bladderwort	*Utricularia gibba*	R1	None	Yes
Flat-leaved Bladderwort	*Utricularia intermedia*	S	None	No
Lesser Bladderwort	*Utricularia minor*	R1	None	No

Note 1. Status Key: E = endangered, T = threatened, S = sensitive, R1 = review group 1 (potential concern but need more field work), R2 review group 2 (potential concern but unresolved taxonomic questions), LT = listed threatened, SC = species of concern, and Yes under Historic Record indicates the most recent sighting in the county is before 1977.

The 26 rare plants identified as potentially occurring in King County by the WDNR typically have very specific habitat requirements. These range from being associated with prairie/ grassland habitats, bogs and fens, freshwater wetlands or lake margins, high elevation/sub alpine habitats, old growth forests, or coniferous forests. Based on a review of Sections that Contain Natural Heritage Features (data current as of October 15, 2008), no occurrences have been documented in T24N R05E S16.

3.1.3 Streams

Williams et al. (1975) describes Coal Creek (stream number 08-0268) as a 7-mile-long stream originating in the Newport Hills/Newcastle area (**Figure 4**). The project site is located in the vicinity of RM 1.4, which is approximately .5-mile upstream of the I-405 crossing over Coal Creek. Coal Creek flows through a ravine with a steep gradient between RM 2.7 and 4.0 where an impassable cascade and 10-foot falls are located (Williams et al. 1975). Tributary 08-0269 connects with the mainstem of Coal Creek downstream of the proposed project area.

Stream Habitat. Habitat conditions in Coal Creek are variable, but typical of most urbanized streams in that habitat conditions have been degraded. According to Kerwin (2001), the primary limiting factors affecting Coal Creek include increased sedimentation, loss of channel complexity, degraded riparian conditions, altered hydrology, and poor water quality. The following paragraphs summarize these interconnected factors. For a detailed description of existing conditions in the Coal Creek basin, see *Salmon and Steelhead Habitat Limiting Factors Report for the Cedar – Sammamish Basin (Water Resource Inventory Area 8)* (Kerwin 2001) and *Coal Creek Stabilization Program Draft Environmental Impact Statement – Volumes I and II*, prepared for the City of Bellevue, Department of Utilities (Tetra Tech/KCM 2005).

Increased sedimentation is the result of streambank erosion and the occasional catastrophic failure of old coal mine tailings along the steep slopes above the creek (Kerwin 2001). The large sediment load degrades spawning habitat by increasing the amount of fines and thereby decreasing the egg-to-fry ratio; increases flooding in depositional areas by reducing channel capacity; and has created a large delta that interferes with recreational boating. **Figure 5** includes photos of the mouth of Coal Creek and May Creek. These two photos are presented for purposes of comparison. Coal Creek and May Creek are adjacent basins with some “similar” characteristics. According to the *May Creek Basin Action Plan* (King County 2001), May Creek is approximately 7 miles long and encompasses 14 square miles. According to King County, Coal Creek is also 7 miles long and encompasses approximately 7.1 square miles. According to Kerwin (2001), the percent effective impervious area in May Creek is 13.1 and in Coal Creek it is 16.0. Both streams partially originate from Cougar Mountain. Since these two basins have some “similar” characteristics, one might assume their deltas would be similar. However, based on a review of aerial photography from March 2005 taken at the approximately 1350-foot elevation, the delta of Coal Creek is significantly larger than that of May Creek. The delta at Coal Creek would have been even larger had it not been for past dredging activities, which is a testament of the large amount of sand and fines moving through and degrading this system.

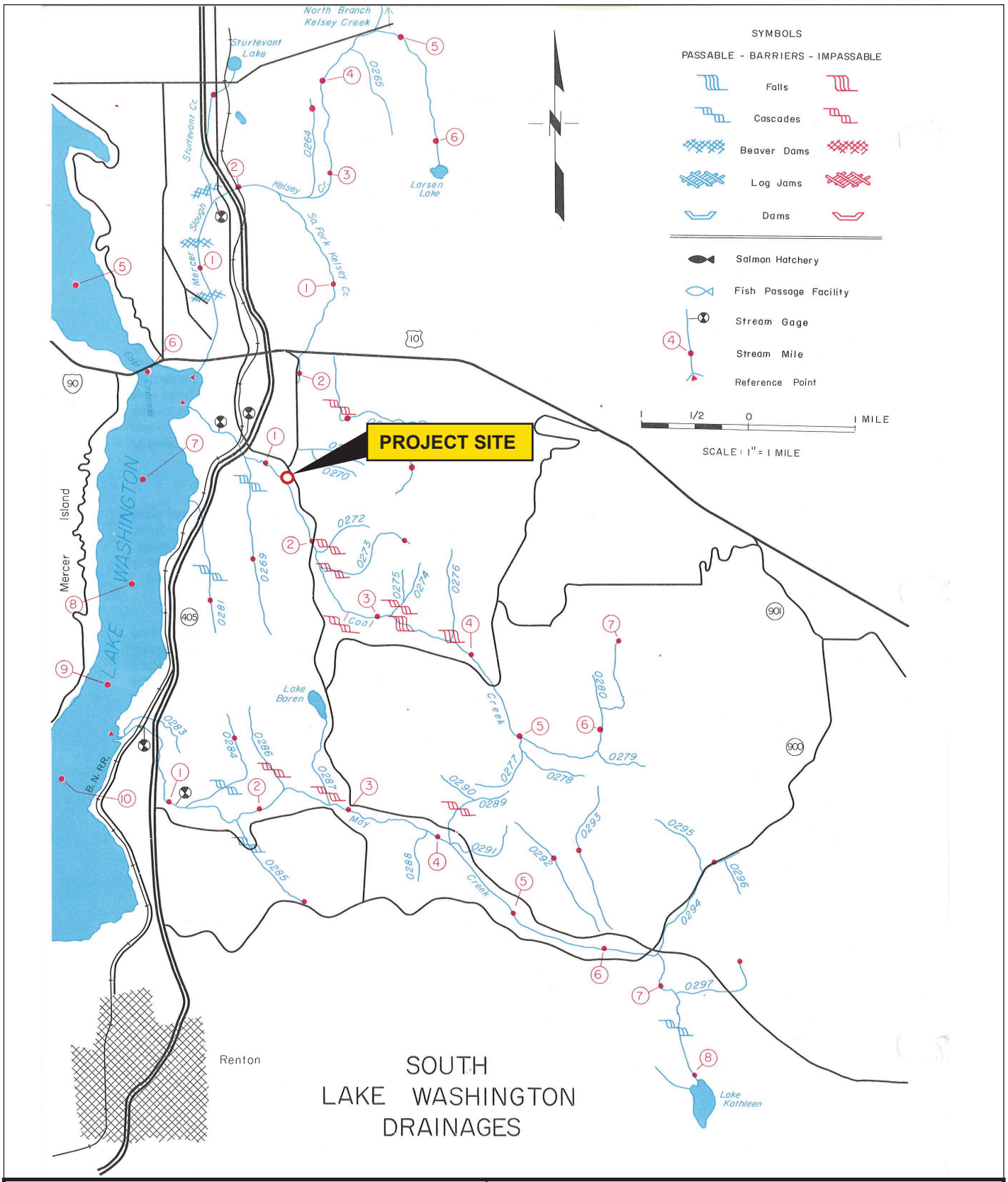

	WDFW Coal Creek Stream Map
	City of Bellevue *Coal Creek Off-line Sediment Pond*
	RWBA0000-0010
	July 2009
	Figure 4
	DAVID EVANS AND ASSOCIATES INC.

Gx1490

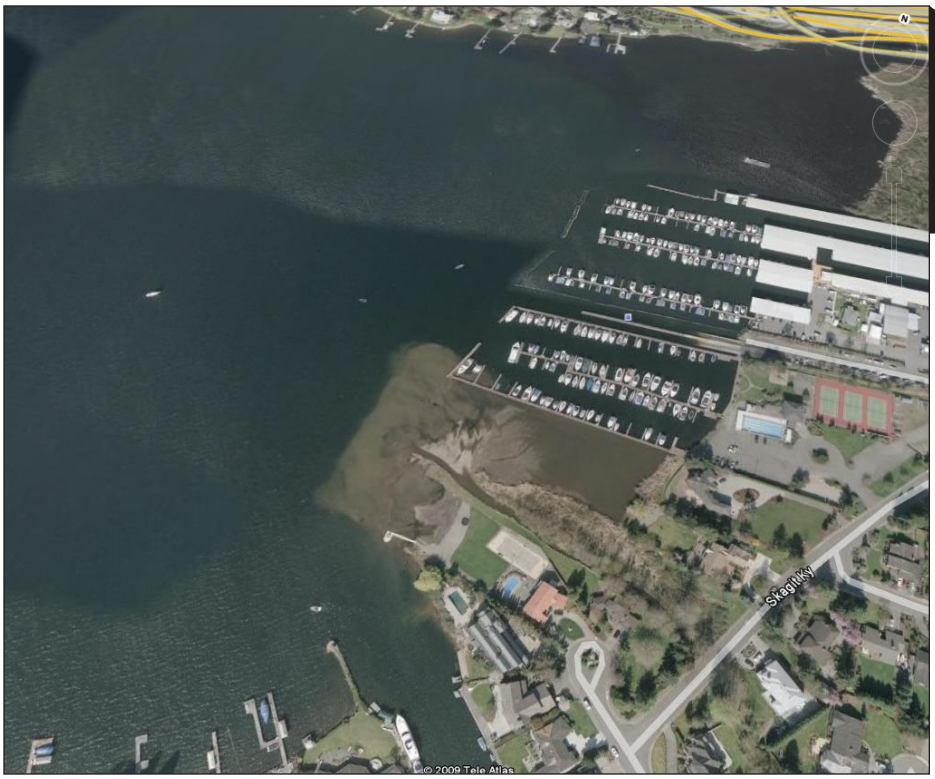

PHOTO 1

PHOTO 2

1 Mouth of Coal Creek.

2 Mouth of May Creek.

Delta Photographs

City of Bellevue
Coal Creek Off-line Sediment Pond

RWBA0000-0010

July 2009

Figure 5

DAVID EVANS AND ASSOCIATES INC.

Gx1490

The loss of channel complexity is the result of numerous factors, but includes manipulation of the channel between the mouth and I-405, and lack of LWD. The lowermost reach of Coal Creek was adversely impacted by the development of Newport Shores and surrounding area by diverting the channel, excavation of canals, channelization, building and filling within the floodplain, clearing native vegetation, roadway construction, alteration of drainage patterns, building homes near the stream channel, and bank armoring. LWD is apparently absent in the lower reach, but increased to 1.8 and 1.1 pieces per channel width in the middle and upper reaches (City of Bellevue unpublished data, 1998 as reported in Kerwin 2001).

Degraded riparian conditions are most pronounced along the lower reach downstream of I-405. Although the middle and upper reaches do contain large forested areas, these reaches are dominated by deciduous species that became established after logging and the extensive coal mining activities ceased. Historically, mature coniferous forest would have been a significant component of the riparian zone and would have contributed LWD to this stream system.

Altered hydrology is due to stormwater runoff from impervious areas as well as past mining activities. Pervious studies have reported that base flows in Coal Creek are higher than expected due to augmentation from mine tunnels (Coal Creek Basin Plan 1987 as reported in Kerwin 2001).

Water Quality. Water quality in Coal Creek has been studied by various agencies. Based on a review of King County data from 1990 through 1993, collected at station number 0442 (located upstream of I-405), water quality parameters are highly variable. The maximum stream temperature was 62 degrees Fahrenheit (° F) during the month of August (King County 1994). Monthly minimum/maximum stream temperatures are as follows: January = 34 to 46° F, February = 32 to 50° F, March = 43 to 51° F, April = 43 to 46° F, May = 51 to 54°F, June = 53 to 57°F, July = 57 to 59° F, August = 51 to 62°F, September = 49 to 55°F, October = 50 to 55° F, November = 50 to 52° F, and December = 39 to 43° F. Stream temperatures reaching 73° F have been reported near the mouth of Coal Creek (Kerwin 2001). Turbidity readings are relatively high in Coal Creek compared to other streams in the Lake Washington Basin, with the maximum reading being 129.0 nephelometric turbidity units (NTUs). Elevated conductivity readings have also been documented in Coal Creek. Biotic Index Ratings from 1991 and 1992 both resulted in a fair rating (King County 1994).

King County Water and Land Resources Division (KCWLRD) maintains updated water quality data on their web page for Site 0442. Temperature ranged from a low of 6.0° Celsius (C) (42.8° F) on February 6, 2008, to a high of 16.5° C (61.7° F) on July 9, 2008. Turbidity ranged from a low of 1.90 NTU on April 9, 2008 to a high of 109 NTU on August 20, 2008.

Coal Creek is designated as “Core Summer Salmonid Habitat” for aquatic life use and “Primary Contact” for recreational use. The lower portion of Coal Creek has been assigned an additional “Supplemental Spawning and Incubation Protection” temperature criteria of 13º C (55.4° F) that is applied from September 15th to May 15th. Based on a review of the KCWLRD web data for 2007–2008, this criteria was met, but temperature measurements above this criteria were reported during early September (15.3 ºC on September 5, 2007). The criterion was not met during several months in the early 1990’s based on King County data (King County 1994).

The final 2004 Water Quality Assessment – Category 5 Listing for Coal Creek includes one listing for fecal coliform (Ecology 2005). The 2008 Washington Department of Ecology 303(d) list, which was approved by the Environmental Protection Agency (EPA) on January 29, 2009, included five listings. **Table 5** below summarizes water quality data in Coal Creek and includes the parameter tested, category, and station.

Table 5: Coal Creek 2008 Water Quality Assessment

Parameter	Category	Station
Ammonia - N	1	Station 442@ RM 0.8 0 excursions out of 39 samples.
Temperature	2	Station 442 @ RM 0.8, criterion exceeded in 2002.
pH	2	Station 442 @ RM 0.8 a few excursions but limited data.
Dissolved Oxygen	5	Station 442 @ RM 0.8 at least 10 percent excursions
Fecal Coliform	5	Station 442 @ RM 0.8 standards not met 1998 – 2002.

The listed categories are defined as follows:

- Category 1 – Meets tested standards for clean waters.
- Category 2 – Waters of concern: Waters where there is some evidence of a water quality problem, but not enough to require production of a water quality improvement project—total maximum daily load (TMDL)—at this time.
- Category 3 – Insufficient data: This category will be largely empty. Water bodies that have not been tested will not be individually listed, but if they do not appear in one of the other categories, they are assumed to belong here.
- Category 4 – Polluted waters that do not require a TMDL: Waters that have pollution problems that are being solved in one of three ways:
- Category 4a – has a TMDL: Water bodies that have an approved TMDL in place and are actively being implemented.
- Category 4b – has a pollution control program: Water bodies that have a program in place that is expected to solve the pollution problems. While pollution control programs are not TMDLs, they must have many of the same features and there must be some legal or financial guarantee that they will be implemented.
- Category 4c – is impaired by a non-pollutant: Water bodies impaired by causes that cannot be addressed through a TMDL. These impairments include low water flow, stream channelization, and dams.
- Category 5 – Polluted waters that require a TMDL: The traditional list of impaired water bodies known as the 303(d) list. Placement in this category means that Ecology has data showing that the water quality standards have been violated for one or more pollutants, and there is no TMDL or pollution control plan. TMDLs are required for the water bodies in this category.

Habitat Summary. Existing stream and watershed conditions were quantified by using watershed and habitat parameters as defined by the "Matrix of Pathways and Indicators" developed by National Oceanic and Atmospheric Administration (NOAA) Fisheries. The "Matrix of Pathways and Indicators" summarizes important parameters for six major pathways, including:

1. Water Quality
2. Habitat Access
3. Habitat Elements
4. Channel Condition and Dynamics
5. Flow/Hydrology
6. Watershed Conditions

These six major pathways are further broken down into a total of 18 indicators. As an example, the water quality pathway is composed of three indicators: temperature, sediment/turbidity, and chemical contamination/nutrients. The indicator conditions are classified as either "properly functioning," "at risk," or "not properly functioning." Criteria for each condition is defined by a range or goal based on the best available scientific data available, but criteria are not absolute, and may be adjusted for unique watersheds (NOAA Fisheries 1996).

The USFWS utilizes two additional pathways that specifically address bull trout, including subpopulation characteristics and integration of species and habitat conditions (USFWS 1998). The subpopulation characteristic pathway is composed of four indicators, including subpopulation size, growth and survival, life history diversity and isolation, and persistence and genetic integrity. **Table 6** summarizes the baseline conditions based on NOAA Fisheries and USFWS criteria.

Table 6: Matrix of Pathways and Indicators Summary

PATHWAY	INDICATORS	BASELINE CONDITIONS
		Coal Creek
Water Quality	Temperature[1]	Not Properly Functioning
	Sediment	Not Properly Functioning
	Chemical Contamination & Nutrients	Functioning at Risk
Habitat Access	Physical Barriers	Functioning at Risk
Habitat Elements	Substrate	Functioning at Risk
	LWD	Not Properly Functioning
	Pool Frequency	Not Properly Functioning
	Pool Quality/Depth	Not Properly Functioning
	Off-Channel Habitat	Not Properly Functioning
	Refugia	Not Properly Functioning
Channel Conditions and Dynamics	Width/Depth Ratio	Not Properly Functioning
	Streambank Condition	Functioning at Risk
	Floodplain Connectivity	Functioning at Risk
Flow/Hydrology	Change in Peak/Base Flows	Not Properly Functioning
	Increase in Drainage Network	Functioning at Risk

PATHWAY	INDICATORS	BASELINE CONDITIONS
		Coal Creek
Watershed Conditions	Road Density and Location	Functioning at Risk
	Disturbance History	Functioning at Risk
	Riparian Reserve/Conservation Areas	Functioning at Risk
Subpopulation Characteristics (bull trout)	Subpopulation Size	Not Properly Functioning
	Growth and Survival	Not Properly Functioning
	Life History Diversity and Isolation	Not Properly Functioning
	Persistence and Genetic Integrity	Not Properly Functioning
Species and Habitat	Species Integration/Habitat Conditions	Not Properly Functioning

Note: Baseline conditions are based on the *Updated Biological Evaluation and Essential Fish Habitat Evaluation for Storm Drainage Infrastructure Rehabilitation Project I-405 Regional Detention Pond – Coal Creek, Bellevue, Washington* (Landau Associates 2005).

Fisheries Resources. Fisheries resources in Coal Creek include anadromous and resident species. The WDFW PHS data obtained for this project reported that fall Chinook salmon (*Oncorhynchus tshawytscha*), coho salmon (*O. kisutch*), sockeye salmon (*O. nerka*), winter steelhead (*O. mykiss*), and resident cutthroat trout (*O. clarki*) utilize Coal Creek (WDFW 2007). Based on a review of WDFW salmon spawning survey data, limited numbers of coho salmon have been observed in Coal Creek. This data includes 45 surveys conducted between 1976 and 2002. During this time period, a total of 246 salmon were observed, composed of 243 coho salmon and 3 sockeye salmon. The highest daily count was on January 5, 1978, when 52 coho salmon were observed between RM 2.0 and 3.3. These surveys apparently focused on documenting coho salmon since most occurred from November through January. Small numbers of Chinook salmon have also been observed in Coal Creek. Six Chinook salmon were observed spawning near RM 0.6 during October and November of 2004 (Tetra Tech/KCM 2005). Steelhead trout have been documented in both the mainstem and in a few tributaries (Newcastle and 08-0273). Other non-salmonids observed in Coal Creek include sculpin (*Cottus* sp.), largescale sucker (*Catostomus macrocheilus*), and lamprey (*Lampetra* sp.). Data from the City of Bellevue from various electrofishing surveys conducted from 1996 through 2003 resulted in the capture of 517 cutthroat trout, 572 rainbow trout, 33 trout less than 80 millimeters (mm), 625 coho salmon, 340 sculpin (species not reported), and 32 lamprey (species not reported). All known fish presence data is summarized in **Table 7**.

Table 7: Coal Creek Fish Use Summary

#	Common Name	Comment
1.	Chinook Salmon	Species of Local Importance per city code (20.25H.150) and federally listed as threatened.
2.	Coho Salmon	Species of Local Importance per city code (20.25H.150).
3.	Sockeye Salmon	Three observed during WDFW salmon spawning surveys.
4.	Steelhead Trout	Federally listed as threatened. Juvenile "trout" were abundant based on data from various electrofishing surveys conducted from 1996 through 2003.
5.	Cutthroat Trout	Abundant based on data from various electrofishing surveys conducted from 1996 through 2003.
6.	Largescale Sucker	Observed at downstream in-line site during site visits.
7.	Sculpin	Probably the most abundant non-salmonid.
8.	Lamprey	Probably western brook lamprey (*Lampetra richardsoni*).

Other native species that could potentially utilize Coal Creek include three-spine stickleback (*Gasterosteus aculeatus*), chum salmon (*O. keta*), kokanee (*O. nerka*), peamouth (*Mylocheilus caurinus*), long-fin smelt (*Spirinchus thaleichthys*), and speckled dace (*Rhinichthys osculus*). Lampreys have been documented in Coal Creek, but which species of lamprey was not documented. Western brook lampreys are most common locally, but river lampreys (*L. ayresi*) have also been documented in Lake Washington. Lastly, species information on sculpins in Coal Creek was also not included in electrofishing data obtained from the City of Bellevue for inclusion in this report. Several different species of sculpin have been documented in the Lake Washington Basin.

Fish Life Histories. The following fisheries life history information is limited to species documented in Coal Creek.

Chinook Salmon

Chinook salmon are the largest and least abundant of the Pacific salmon species inhabiting North American waters. The current state record for the largest Chinook salmon captured in freshwater is 68.26 pounds. Migrating adult Chinook salmon seek cover in deep pools, log jams, and undercut banks until ready to spawn. They require a steady supply of clean, cool, well oxygenated water, and clean gravel for successful spawning. Factors influencing the survival of all juvenile salmonids include the availability of suitable habitat, prey, and refuge from predators and floods. Habitat complexity in the form of pools and riffles, with interspersed downed woody debris of varying size classes is additionally important for the instream survival of both adult and juvenile salmonids. Estuaries provide important feeding/rearing habitat and moderate physiological stress during parr-smolt transition to the marine environment.

Chinook salmon runs are designated on the basis of adult migration timing. Fall Chinook enter freshwater at an advanced state of maturity, move rapidly to their spawning areas, and spawn within a few days or weeks (Meehan 1991). Summer-run fish exhibit intermediate characteristics of fall and spring Chinook. Juvenile use of freshwater can vary substantially depending on life history type (ocean-type or stream-type). Ocean-type Chinook migrate to sea relatively quickly after emergence from the gravel. Stream-type Chinook rear in freshwater for a year or more and require additional habitat characteristics. Lake Washington Basin Chinook salmon are considered ocean-type, although a small number of yearlings exist in the basin.

Adult Chinook salmon in the Lake Washington Basin typically begin migrating through the Chittenden Locks in June, with a peak in August, continuing until early October. These Chinook salmon reach their spawning grounds in September, peaking in early October, and are typically finished spawning by early November. Because of their large body size, Chinook tend to use deeper water and larger gravel than other smaller salmon. The female digs a redd in areas with moderate to high velocities in water approximately 1 foot deep (Reiser and Bjornn 1979). Depending on water temperature, incubation takes between 90 to 150 days. Fry emergence and outmigration occurs from January through July. The peak outmigration period can vary from year to year, and multiple peaks (bi-modal) typically occur during a given season. Time of spawning, stream temperatures, genetics, and high-flow events can all influence when fry and smolts reach Lake Washington from the various tributary streams.

Coho Salmon

The life history of the coho salmon varies depending on geographic location, but there are some traits that are fairly constant throughout their range. Most coho mature after spending a year to 16 months at sea. At this time, usually late summer or fall, they return to their natal spawning habitat. Coho typically spawn between the months of November and January. Subsequent emergence from the gravel usually occurs in the months of March through July. Coho juveniles sometimes spend a year or more rearing in freshwater habitats such as small tributaries, side-channel areas, or lakes. After the period of freshwater residence, smolting occurs, generally in the spring. Outmigration occurs from late March through early June, peaking in May. The current state record for the largest coho salmon captured in freshwater is 25.27 pounds.

Steelhead Trout

Steelhead trout occur in two forms: the anadromous steelhead and the resident rainbow. The life histories of steelhead can vary considerably. Adult steelhead trout are divided into two races depending on the time of year they enter freshwater: summer-run and winter-run. Winter-run steelhead are native to the Lake Washington Basin, while summer-run are not known to be present. Numerous plants of hatchery stocks have occurred. Wild steelhead in the Lake Washington Basin generally run from mid December to mid May and spawn from early March to mid June (WDFW 1994). After emergence from the gravel, steelhead fry are heavily dependent upon streamside vegetation and submerged cover for protection from predators. Juveniles spend one to four years in freshwater before migrating to sea. The outmigration generally occurs in the spring (April through June); most spend up to four years at maturing in the ocean before returning to their natal stream. Some return early and return as jacks, and some survive to spawn multiple times. The current state record for the largest winter run steelhead captured in freshwater is 32.75 pounds.

Cutthroat Trout

Like steelhead trout, cutthroat trout have diverse life histories, including non-migratory and migratory (sea-run/anadromous). Non-migratory cutthroat can exhibit resident, fluvial, or adfluvial life histories. Cutthroat trout are one of the most widely distributed species in western Washington streams. According to Wydoski and Whitney (1979), sea-run cutthroat spawn primarily from late December to February. Most fry emerge from their redd by mid April. Cutthroat trout may be the most abundant salmonid in Coal Creek.

Largescale Sucker

In ideal conditions, the largescale sucker can live for 11 years, reach a length of 2 feet, and weigh up to 7 pounds (Wydoski and Whitney 1979). The current state record for the largest largescale sucker captured in freshwater is 5.34 pounds. Preferred habitats include slow-moving portions of rivers and streams, and shallow areas within lakes. Spawning occurs in April and/or May where fine gravel and sand exists in rivers, but spawning has also been documented along the shoreline of lakes. Fry consume primarily zooplankton and aquatic insect larvae, while large fish consume a variety of benthic organisms such as aquatic insects, crustaceans, earthworms, snails, and detritus. Largescale suckers occur throughout both eastern and western Washington.

Sculpins

Sculpins (*Cottus* spp.) are a diverse group of bottom dwellers that are native and an important prey item for other fish. They are typically relatively small (2 to 4 inches long) and associated with gravel-bottomed streams where they seek cover during the day. Prey items include primarily crustaceans, worms, and insects.

Western Brook Lamprey

The western brook lamprey is small (<7 inches), strictly freshwater, filter feeder that consumes microscopic organic matter. They spawn in gravel riffles by making a small nest/depression between April and July. Lamprey larvae (ammocoetes) typically utilize fine silt substrate areas. Unlike river and pacific lamprey, western brook lampreys do not prey on fish.

3.1.4 Wetlands

The National Wetland Inventory, Mercer Island, Washington (1988) map (**Figure 6**) and the King County Sensitive Areas Map Folio (King County 1990) do not depict any wetlands in the project area.

Wetlands on the McIntosh parcels were previously identified, delineated, and categorized by Jones & Stokes (2008). This section relies on that data. Jones & Stokes (2008) delineated two wetlands and three streams (described later) on the project site (**Appendix B**). **Appendix B** contains a full copy of their report including maps, and data and Ecology ratings forms. **Table 8** below summarizes the wetland data.

Table 8: Wetland Summary

Wetland ID	Ecology[1] Category	Wetland Size (acres)	Ecology[1] Wetland Class	Total Wetland Functions Score	Water Quality Functions Score	Hydrology Functions Score	Wildlife Functions Score	City of Bellevue Buffer Width
1	III	0.73 +	Slope	45	12	12	21	110 feet
2	IV	0.006	Depressional	21	6	5	10	NA

[1] Washington State Department of Ecology

WETLAND 1: Wetland 1 is a palustrine forested (PFO)/scrub-shrub deciduous wetland located on the west side of Coal Creek (Jones & Stokes 2008). It is dominated by red alder and salmonberry. Since Wetland 1 is on the west side of Coal Creek, it would not be directly impacted by construction of the off-line sediment pond.

WETLAND 2: Wetland 2 is a palustrine emergent (PEM) wetland located near the existing on-site structure (Jones & Stokes 2008) and would be completely excavated during construction. It is an isolated wetland dominated by creeping buttercup, common horsetail, and unidentified grasses. Since it is only 254 square feet in area, it may not be regulated by the City of Bellevue. The U.S. Army Corps of Engineers (Corps) does not have regulatory authority over isolated wetlands, but the Washington State Department of Ecology (Ecology) does.

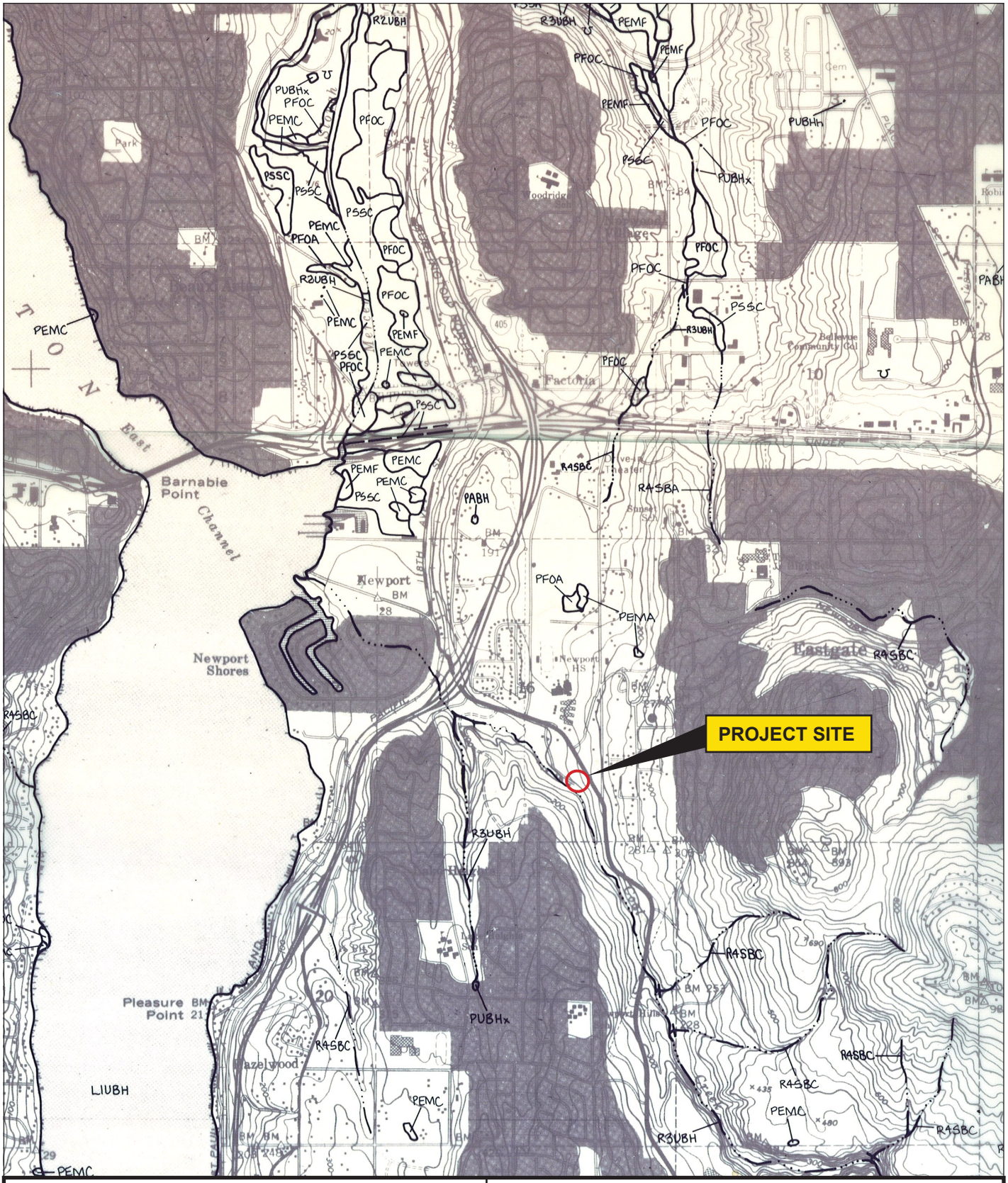

N

0 1 Mile

National Wetland Inventory Map

City of Bellevue
Coal Creek Off-line Sediment Pond

RWBA0000-0010

July 2009

Figure 6

DAVID EVANS AND ASSOCIATES INC.

Gx1490

3.1.4.1 Wetlands Based on the Semi-Quantitative Assessment Method

A wetland functional assessment (Cooke 2000) was completed for all wetlands on the site. The completed assessment forms for both wetlands are included within **Appendix C**. **Table 9** summarizes the general score (low, medium, or high) of each wetland for a range of wetland functions. The erosion/shoreline protection function is only appropriate for riverine or lacustrine wetlands (Cooke 2000).

Table 9: Existing Wetlands Functional Value Summary

Wetland	Flood/Storm Water Control	Base Flow	Erosion Shoreline Protection	Water Quality Imp.	Natural Biological Support	Overall Habitat Function	Specific Habitat Function	Cultural/ Socio-economic
1	Medium (9)	Medium (8)	NA	High (12)	Medium (24)	Medium (7)	Medium (10)	Low (8)
2	Low (5)	Low (5)	NA	High (12)	Low (17)	Low (3)	Low (5)	Low (6)

* raw functional value scores included in parentheses

Flood/Storm Water Control. Wetlands have the opportunity to provide flood and stormwater control by impounding excess water and releasing it slowly. This reduces the potential flooding of waters downstream. Wetland functional performance is based upon size, type, shape, amount of depressional area, and type of outlet.

This function was assessed by determining the wetland size within the landscape context, the type of wetland (riverine, mid-slope, or depressional), the type of outlet, and the location within the watershed (upper, middle, or lower portion of the drainage). Wetland 1 received a medium score and Wetland 2 received a low score. Wetland 2 scored higher since it is larger, mid-slope, and predominantly forested.

Base Flow/Ground Water Support. Wetlands provide base flow and groundwater support by impounding water for a period of time and letting it slowly infiltrate and recharge groundwater. This helps maintain aquifers within the drainage basin.

This function was assessed by determining the wetland size within the landscape context, the type of wetland, the location within the drainage, and the duration of saturation present within the wetland. Wetland 1 received a medium score and Wetland 2 received a low score. Wetland 1 scored higher due to larger size, Hydrogeomorphic Model (HGM) type (mid-slope), and increased saturation.

Erosion/Shoreline Protection. This function is only applicable for riverine or lacustrine wetlands.

Water Quality Improvement. Through a variety of actions, wetlands can improve water quality within a watershed. This can occur through the impoundment of water and settling of particulates. This can be enhanced by increased amounts of vegetation within a wetland that may act to slow water and/or trap particulates.

The Cooke method assessed this function by quantifying the speed of water flow through the site, the amount of vegetation present, the level of development within the watershed (opportunity), the amount of overland flow contained within the wetland, and the type of soil.

Both wetlands scored high since wetland size or vegetation type was not factored into the assessment.

Natural Biological Support. Wetlands provide biological support to flora and fauna by providing a variety of habitat types, habitat features, organic matter, and well vegetated buffers. The function was assessed by the wetland's size, amount of vegetation layers, number of habitat types, plant diversity, habitat features, and buffer condition.

Wetland 1 scored medium and Wetland 2 scored low. Wetland 2 is very simplistic in that it is limited to emergent species, is small, and lacks habitat features such as snags. Wetland 2 is dominated by non-native species and provides limited habitat value.

Overall Habitat Functions. This function illustrates the overall size, diversity, and relative importance within the watershed of a given wetland. Wetland 1 scored medium and Wetland 2 scored low. Wetland 2 is very simplistic in that it is limited to emergent species, is small, and lacks habitat features such as snags. Wetland 2 is dominated by non-native species and provides limited habitat value.

Specific Habitat Functions. This function assesses the wetland's ability to provide specific habitat support to invertebrates, amphibians, fish, mammals, and birds. Wetland 1 scored medium and Wetland 2 scored low. Wetland 2 is very simplistic in that it is limited to a few emergent species, is small, and lacks habitat features such as snags. Wetland 2 is dominated by non-native species and provides limited habitat value.

Cultural/Socioeconomic. This function assesses the value that the wetland provides to society, including educational opportunities, commercial, recreational, and historical. Both wetlands received a low score for this function, although Wetland 1 scored a few more points since it has moderate aesthetic value and provides some passive and active recreational opportunities.

3.1.5 U.S. Department of Agriculture Soil Data

The U.S. Department of Agriculture (USDA) Soil Conservation Service (SCS) mapped soils in the project area as Norma sandy loam (**Figure 7**). This soil type is described as having a slight erosion hazard with permeability being moderately rapid. The typical profile includes 0 to 10 inches of black (10YR 2/1) sandy loam that is dark grayish-brown (10YR 4/2) when dry. From 10 to 30 inches the soil is dark grayish-brown (2.5Y 4/2) sandy loam, light brownish (2.5Y 6/2) dry, with many prominent yellowish-red (5YR 7/1) and brown (7.5 YR 4/4) mottles. The USDA SCS Hydric Soils of the State of Washington (USDA 1991) list for King County includes Norma sandy loam as a hydric soil.

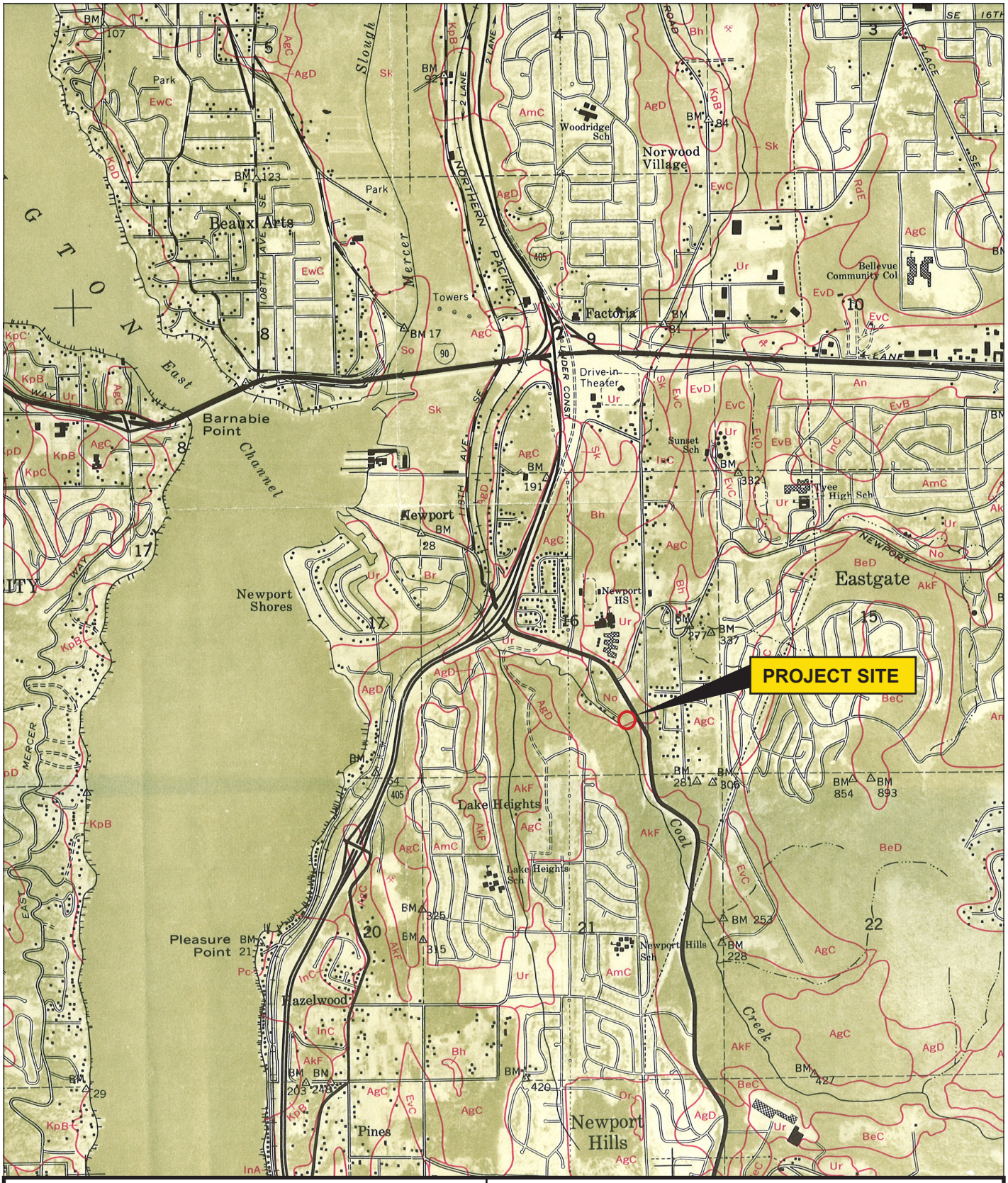

N

0 1 Mile

Gx1490

Soil Survey - King County Area

City of Bellevue
Coal Creek Off-line Sediment Pond

RWBA0000-0010

July 2009

Figure 7

DAVID EVANS AND ASSOCIATES INC.

3.1.6 Amphibians and Reptiles

The WSGA data for amphibians and reptiles contains limited site-specific occurrence data but includes a map for each species outlining its core and peripheral zones (Dvornich et al. 1997). These zones represent the potential distribution of each species based on the presence of suitable habitat within each zone. Therefore, the species outlined below in **Table 10** have the potential to occur in the general project area if suitable habitat is present.

Table 10: Amphibians and Reptiles

Common Name	Scientific Name	Note
Northwestern Salamander	*Ambystoma gracile*	Probably Present.
Long-toed Salamander	*Ambystoma macrodactylum*	Probably Present
Pacific Giant Salamander	*Dicamptodon tenebrosus*	Possibly Present
Rough-skinned Newt	*Taricha granulosa*	Possibly Present
Western Redback Salamander	*Plethodon vehiculum*	Possibly Present
Ensatina	*Ensatina eschscholtzii*	Possibly Present.
Western Toad	*Bufo boreas*	Federal species of concern and state candidate, but unlikely present.
Pacific Treefrog	*Hyla regilla*	Probably Present
Red-legged Frog	*Rana aurora*	Possibly Present.
Bullfrog	*Rana catesbeiana*	Introduced, common in permanent ponds and lakes.
Painted Turtle	*Chrysemys picta*	Introduced, common in/near lakes
Slider	*Trachemys scripta*	Introduced, common in/near lakes
Northern Alligator Lizard	*Elgaria coerulea*	Possibly Present
Western Terrestrial Garter Snake	*Thamnophis elegans*	Possibly Present
Northwestern Garter Snake	*Thamnophis ordinoides*	Possibly Present
Common Garter Snake	*Thamnophis sirtalis*	Possibly Present
Rubber Boa	*Charina bottae*	Unlikely Present

3.1.7 Mammals

Based on a review of WSGA data (Johnson and Cassidy 1997), nine mammals have been documented in Township 24 North by Range 05 East (**Table 11**). However, this list is not all-inclusive and only includes species that were documented in the WSGA database prior to 1997.

Table 11: Mammal Record Summary for T24N R05E

#	Common Name	Scientific Name
1.	Shrew-mole	*Neurotrichus gibbsii*
2.	Townsend's Mole	*Scapanus townsendii*
3.	Little Brown Myotis	*Myotis lucifugus*
4.	Yuma Myotis	*Myotis yumanensis*
5.	Eastern Gray Squirrel	*Sciurus carolinensis*
6.	House Mouse	*Mus musculus*
7.	Norway Rat	*Rattus norvegicus*
8.	Coyote	*Canis latrans*
9.	Mountain lion	*Felis concolor*

Other species not documented in the WSGA database that could potentially utilize the project vicinity include the black bear (*Ursus americanus*), Virginia opossum (*Didelphis virginiana*), Trowbridge's shrew (*Sorex trowbridgii*), vagrant shrew (*Sorex vagrans*), coast mole (*Scapanus orarius*), California myotis (*Myotis californicus*), long-legged myotis (*Myotis volans*), hoary bat (*Lasiurus cinereus*), silver-haired bat (*Lasionycteris nocitvagans*), big brown bat (*Eptesicus fuscus*), Townsend's big-eared bat (*Plecotus townsendii*), snowshoe hare (*Lepus americanus*), eastern cottontail (*Sylvilagus floridnus*), mountain beaver (*Aplodontia rufa*), Townsend's chipmunk (*Tamias townsendii*), Douglas' squirrel (*Tamiasciurus douglasii*), northern flying squirrel (*Glaucomys sabrinus*), beaver (*Castor canadensis*), forest deer mouse (*Peromyscus keeni*), deer mouse (*Peromyscus maniculatus*), creeping vole (*Microtus oregoni*), Townsend's vole (*Microtus townsendii*), muskrat (*Ondatra zibethicus*), pacific jumping mouse (*Zapus trinotatus*), porcupine (*Erethizon dorsatum*), nutria (*Myocastor coypus*), black rat (*Rattus rattus*), red fox (*Vulpes vulpes*), raccoon (*Procyon lotor*), ermine (*Mustela erminea*), long-tailed weasel (*Mustela frenata*), mink (*Mustela vison*), striped skunk (*Mephitis mephitis*), spotted skunk (*Spilogale gracilis*), bobcat (*Lynx rufus*), and black-tailed deer (*Odocoileus hemionus*).

3.1.8 Birds

Based on a review of WSGA data, 75 bird species could potentially nest in the general area in or adjacent to T24N R05E (Smith et al. 1997). This determination is based on combining confirmed, probable, and possible breeding evidence. It is important to note that the species listed in **Table 12** are not necessarily associated with the project area but could potentially utilize the project vicinity for nesting, foraging, or during migration.

Table 12: Breeding Bird Summary for T24N R05E

#	Common Name	Scientific Name
1.	Pied-billed Grebe	*Podilymbus podiceps*
2.	Great Blue Heron	*Ardea herodias*
3.	Green Heron	*Butorides virescens*
4.	Canada Goose	*Branta canadensis*
5.	Wood Duck	*Aix sponsa*
6.	Green-winged Teal	*Anas crecca*
7.	Mallard	*Anas platyrhynchos*
8.	Gadwall	*Anas strepera*
9.	Common Merganser	*Mergus merganser*
10.	Osprey	*Pandion haliaetus*
11.	Bald Eagle	*Haliaeetus leucocephalus*
12.	Cooper's Hawk	*Accipiter cooperii*
13.	Red-tailed Hawk	*Buteo jamaicensis*
14.	California Quail	*Callipepla californica*
15.	Virginia Rail	*Rallus limicola*
16.	American Coot	*Fulica americana*
17.	Killdeer	*Charadrius vociferus*
18.	Spotted Sandpiper	*Actitis macularia*
19.	Glaucous-winged Gull	*Larus glaucescens*
20.	Rock Dove	*Columba livia*
20.	Band-tailed Pigeon	*Columba fasciata*
21.	Vaux's Swift	*Chaetura vauxi*
22.	Rufous Hummingbird	*Selasphorus rufus*
23.	Belted Kingfisher	*Ceryle alcyon*
24.	Red-breasted Sapsucker	*Sphyrapicus ruber*
25.	Downy Woodpecker	*Picoides pubescens*
26.	Hairy Woodpecker	*Picoides villosus*
27.	Northern Flicker	*Colaptes auratus*
28.	Pileated Woodpecker	*Dryocopus pileatus*
29.	Olive-sided Flycatcher	*Contopus borealis*
30.	Western Wood-Pewee	*Contopus sordidulus*
31.	Willow Flycatcher	*Empidonax traillii*
32.	Pacific-slope Flycatcher	*Empidonax difficilis*
33.	Tree Swallow	*Tachycineta bicolor*
34.	Violet-green Swallow	*Tachycineta thalassina*
35.	Cliff Swallow	*Hirundo pyrrhonota*
36.	Barn Swallow	*Hirundo rustica*
37.	Steller's Jay	*Cyanocitta stelleri*
38.	American Crow	*Corvus brachyrhynchos*
39.	Black-capped Chickadee	*Parus atricapillus*
40.	Chestnut-backed Chickadee	*Parus rufescens*
41.	Bushtit	*Psaltriparus minimus*
42.	Red-breasted Nuthatch	*Sitta canadensis*
43.	Brown Creeper	*Certhia americana*
44.	Bewick's Wren	*Thryomanes bewickii*
45.	Winter Wren	*Troglodytes troglodytes*
46.	Marsh Wren	*Cistothorus palustris*
47.	Golden-crowned Kinglet	*Regulus satrapa*
48.	Swainson's Thrush	*Catharus ustulatus*
49.	American Robin	*Turdus migratorius*
50.	Cedar Waxwing	*Bombycilla cedrorum*
51.	European Starling	*Sturnus vulgaris*
52.	Hutton's Vireo	*Vireo huttoni*
53.	Warbling Vireo	*Vireo gilvus*
54.	Orange-crowned Warbler	*Vermivora celata*
55.	Yellow Warbler	*Dendroica petechia*
56.	Black-throated Gray Warbler	*Dendroica nigrescens*
57.	Common Yellowthroat	*Geothlypis trichas*
58.	Wilson's Warbler	*Wilsonia pusilla*
59.	Western Tanager	*Piranga ludoviciana*
60.	Black-headed Grosbeak	*Pheucticus melanocephalus*
61.	Spotted Towhee	*Pipilo maculatus*
62.	Savannah Sparrow	*Passerculus sandwichensis*
63.	Song Sparrow	*Melospiza melodia*
64.	White-crowned Sparrow	*Zonotrichia leucophrys*
65.	Dark-eyed Junco	*Junco hyemalis*
66.	Red-winged Blackbird	*Agelaius phoeniceus*
67.	Brewer's Blackbird	*Euphagus cyanocephalus*
68.	Brown-headed Cowbird	*Molothrus ater*
69.	Bullock's Oriole	*Icterus bullockii*
70.	Purple Finch	*Carpodacus purpureus*
71.	House Finch	*Carpodacus mexicanus*
72.	Red Crossbill	*Loxia curvirostra*
73.	Pine Siskin	*Carduelis pinus*
74.	American Goldfinch	*Carduelis tristis*
75.	House Sparrow	*Passer domesticus*

3.1.9 Federally Listed Species

The USFWS species list for King County (revised November 1, 2007) includes seven species listed as threatened or endangered, designated critical habitat for three species, two candidate species, and 22 species of concern. Based on a review of existing habitat conditions and the WDFW PHS data, federally listed species under the jurisdiction of the USFWS do not exist within the project area. Coal Creek does not provide suitable habitat for bull trout, nor has it been designated as critical habitat. Suitable habitat for federally listed species or critical habitat under jurisdiction of the USFWS does not occur in the project area. The remainder of the species under USFWS jurisdiction have very specific habitat requirements that are generally absent throughout the urbanized Puget Sound region.

The NMFS has jurisdiction over federally listed anadromous salmonids, marine mammals and turtles, designated Chinook salmon critical habitat, and essential fish habitat (EFH). Chinook salmon and steelhead trout, which are both listed as threatened species, have been documented in Coal Creek. Coal Creek has not been designated as Chinook salmon critical habitat. However, Coal Creek would be considered EFH since it is utilized by coho salmon.

3.1.10 Floodplains

The project site includes the mainstem of Coal Creek, which is mapped by Federal Emergency Management Agency (FEMA) Flood Insurance Rate Maps as being within Zone A where no base flood elevation has been determined. The mainstem channel is also defined as being within the special flood hazard area that is inundated by the 100-year flood (**Figure 8**). The 100-year floodplain is confined to the mainstem of Coal Creek, while the adjacent uplands where the off-channel pond will be located is mapped as the Zone X. Zone X is defined as areas of 500-year flood; areas of 100-year flood with average depths less than one foot or with drainage areas less than one square mile; and areas protected by levees from 100-year flood. Since the off-line pond will be connected to mainstem at its upstream and downstream tie-in points, the pond will become part of the 100-year flood zone. However, the project will increase overall flood storage capacity.

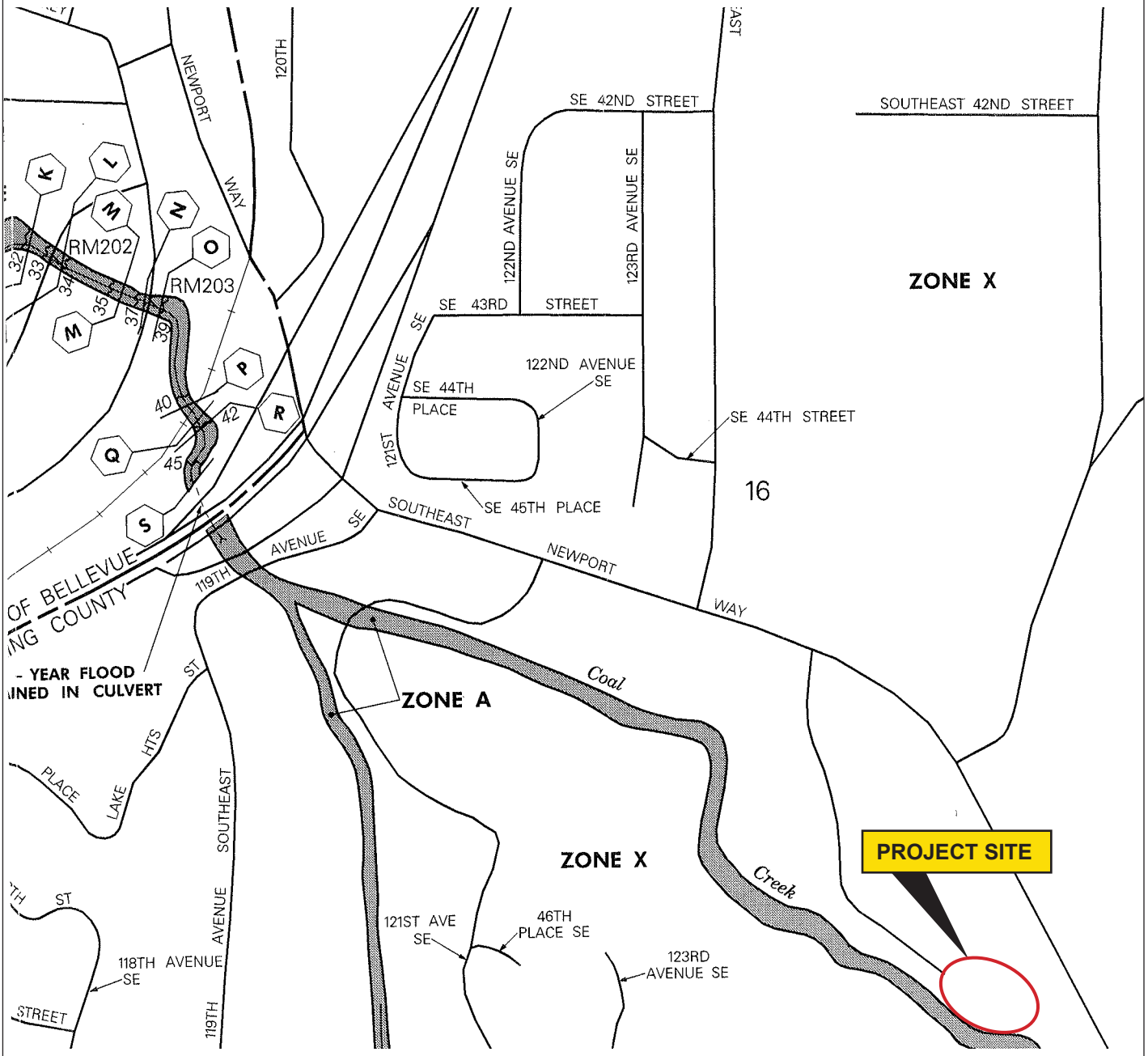

Source: National Flood Insurance Program
Flood Insurance Rate Map Revised May 16, 1995.

N

FIRM Map No. 53033C0658 F

City of Bellevue
Coal Creek Off-line Sediment Pond

RWBA0000-0010

July 2009

Figure 8

DAVID EVANS AND ASSOCIATES INC.

Gx1490

3.1.11 Habitat Associated with Species of Local Importance

The City of Bellevue has designated habitat associated with species of local importance as a critical area. If habitat for a species of local importance is impacted by a proposal, the project proponent must implement a wildlife management plan developed for that species. **Table 13** outlines the species of local importance per CAO 20.25H.150 and provides a general summary of the potential presence of each species and suitable habitat.

Table 13: Species of Local Importance

Common Name	Scientific Name	Note
Bald Eagle	*Haliaeetus leucocephalus*	Not present within project area. Suitable habitat includes shoreline areas along Lake Washington, which is located approximately 0.8 mile west of project area. The closest nest is approximately two miles northwest of the project area.
Peregrine Falcon	*Falco peregrinus*	Not present within project area. No suitable habitat present. The closest nest is approximately 1.7 mile northwest of the project area.
Common loon	*Gavia immer*	Not present within project area. No suitable habitat present.
Pileated woodpecker	*Dryocopus pileatus*	Likely within general project area, as suitable habitat is present.
Vaux's swift	*Chaetura vauxi*	Probably not present in general project area due to absence of mature or old growth forest.
Merlin	*Falco columbarius*	Probably not present within project area ; no sightings or core habitat. Uncommon in western Washington.
Purple martin	*Progne subis*	Probably not present within project area.
Western grebe	*Aechmophorus occidentalis*	Probably not present within project area.
Great blue heron	*Ardea herodias*	Observed in project area, foraging in Coal Creek.
Osprey	*Pandion haliaetus*	Not present within project area. Suitable habitat includes shoreline areas along Lake Washington, which is located approximately 0.8 mile west of project area.
Green heron	*Butorides striatus*	Possibly present within general project area.
Red-tailed hawk	*Buteo jamaicensis*	Potentially occasionally present in general project area, but not on-site.
Townsend's big-eared bat	*Corynorhinus townsendii*	Probably not present within project area due to the absence of caves, lava tubes, or abandoned buildings, but could occur further up the basin due to presence of abandoned Coal Mines.
Keen's myotis	*Myotis keeni*	Probably not present within project area. Found in low elevation forests but no data for King County.
Long-legged myotis	*Myotis volans*	Possibly within general project area, as suitable habitat is present and they have been documented in King County.
Long-eared myotis	*Myotis evotis*	Possibly within general project area as suitable habitat is present. They have not been documented in the Puget Sound region.
Oregon spotted frog	*Rana pretiosa*	Not present within project area. No suitable habitat present.
Western toad	*Bufo boreas*	Probably not present within project area.
Western pond turtle	*Clemmys marmorata*	Not present within project area. No suitable habitat present.
Chinook salmon	*Oncorhynchus tshawytscha*	They have been documented, but very rarely, in reach below I-405. Use in project reach can not be ruled out, but is unlikely.
Bull trout	*Salvelinus confluentus*	Suitable habitat not present in Coal Creek.
Coho salmon	*Oncorhynchus kisutch*	Documented in Coal Creek and suitable habitat present.
River lamprey	*Lampetra ayresi*	Coal Creek is not typical habitat for this species, but can not be ruled out conclusively.

3.1.12 Geologic Hazard Areas

Geologic hazard areas include landslide areas, steep slopes, and coal mine hazards. Landslide hazard areas are defined as areas of slope of 15 percent or more with more than 10 feet rise. Steep slopes are slopes of 40 percent or more that has a rise of at least 10 feet and exceed 1,000 square feet in area. Coal mine hazards are outlined in the City of Bellevue Coal Mine Area Map or in the City's coal mine area regulations.

Based on a review of Figure G-2 Geologic Hazards Map, City of Bellevue Critical Areas Ordinance Update, coal mine hazard areas are restricted to the middle and upper reaches of Coal Creek. The general coal mine hazard area includes Newcastle and the upper reaches of Coal Creek. The City of Bellevue Geologic Hazards Map does not include the project area as being within a coal mine hazard area.

The City of Bellevue Geologic Hazards Map also indicates the project site partially includes a liquefaction hazard area and erosion hazard area. The term *partially* is used as the map indicates these hazard areas are on-site but that the project area is along the northeastern edge of them. Steep slopes also occur on-site, primarily north and east of the project area. Generally speaking, the project area is flat, but steep slopes are present along both sides of Coal Creek from I-405 to its headwaters.

3.2 FIELD ASSESSMENT

The field assessment includes documentation of the on-site wetlands, streams, wildlife, and upland habitat. Site photos are contained in **Figure 9**. On-site wetlands were previously delineated and assessed by Jones & Stokes (2008) and summarized in **Section 3.1.4**. A complete copy of their report is contained in **Appendix B**. This section will focus on Coal Creek and riparian habitat, unnamed tributary to Coal Creek, and wildlife.

3.2.1 Coal Creek

Coal Creek is a Type F stream that requires a 100-foot buffer at an undeveloped site. It is not considered a Shoreline of the State. A stream survey was conducted within the project reach on May 28, 2009, for a total distance of approximately 662 linear feet. The survey starting point was approximately 103 feet downstream of the project parcel boundary and continued upstream past the existing sewer crossing, ending at a cluster of boulders previously installed as part of a bank protection project. The stream survey was generally based on the U.S. Forest Service (USFS) – Pacific Northwest Region (Region 6) method (USFS 2000), except that the woody debris threshold was lowered to include smaller pieces (>6 feet long by 4 inches wide).

PHOTO 1

PHOTO 2

1 Coal Creek immediately downstream of the project site.

2 Project site begins at small red alder trees.

Site Photographs

City of Bellevue
Coal Creek Off-line Sediment Pond

RWBA0000-0010

July 2009

Figure 9

DAVID EVANS AND ASSOCIATES INC.

Gx1490

PHOTO 3

PHOTO 4

3 Sediment pond outlet would enter Coal Creek in this area.

4 Thick English ivy between existing house and Coal Creek.

Site Photographs

City of Bellevue
Coal Creek Off-line Sediment Pond

RWBA0000-0010

July 2009

Figure 9

DAVID EVANS AND ASSOCIATES INC.

Gx1490

PHOTO 5

PHOTO 6

5 Coal Creek immediately upstream of project site.

6 Inlet to sediment pond would occur in this area.

Site Photographs

City of Bellevue
Coal Creek Off-line Sediment Pond

RWBA0000-0010

July 2009

Figure 9

DAVID EVANS AND ASSOCIATES INC.

Gx1490

PHOTO 7

PHOTO 8

7 Inlet to sediment pond would occur in this area.

8 View of existing on-site clearing. House is behind telephone pole.

Site Photographs

City of Bellevue
Coal Creek Off-line Sediment Pond

RWBA0000-0010

July 2009

Figure 9

DAVID EVANS AND ASSOCIATES INC.

Gx1490

PHOTO 9

PHOTO 10

9 View of existing on-site clearing. House is behind telephone pole.

10 Entrance to project site.

Site Photographs

City of Bellevue
Coal Creek Off-line Sediment Pond

RWBA0000-0010

July 2009

Figure 9

DAVID EVANS AND ASSOCIATES INC.

Gx1490

PHOTO 11

PHOTO 12

11 Existing house and cars.

12 Existing trailer next to house and beer can pile.

Site Photographs

City of Bellevue
Coal Creek Off-line Sediment Pond

RWBA0000-0010

July 2009

Figure 9

DAVID EVANS AND ASSOCIATES INC.

Gx1490

PHOTO 13

PHOTO 14

13 Close up of on-site wetland vegetation.

14 Steep slope immediately north of proposed sediment pond.

Site Photographs

City of Bellevue
Coal Creek Off-line Sediment Pond

RWBA0000-0010

July 2009

Figure 9

DAVID EVANS AND ASSOCIATES INC.

Gx1490

Twenty natural sequence order (NSO) units were recorded, including 10 riffles (R) and 10 pools (P) (**Table 14**). Habitat included 321 linear feet of pool habitat and 341 linear feet of riffles habitat, resulting in a pool/riffle ratio of 0.94. Although pools were abundant, they tended to be relatively shallow with a residual depth ranging from 0.5 to 2.1 feet deep (mean = 1.2 feet). Several of the pools in the lower reach were created by rootwads imbedded in the large riprap/boulder bank armoring or fallen boulders. The left bank (facing upstream) was armored for approximately 186 linear feet. Armoring started off-site along the stream edge at the downstream residence and continued on-site, ending at NSO 7. The bankfull width (BFW) of riffles ranged from 22 to 40 feet.

Table 14: Stream Survey Summary

NSO #	Habitat Type & Num.	Length	Width	Max. Depth	Ave. Depth	Depth at Pool Crest	Residual Depth	BFW	Comment
1	R1	63	14	0.9	0.3			26	Off-site. Left Bank Armored.
2	P1	24	13	1.2	0.7	0.7	0.5		Off-site. Left Bank Armored.
3	R2	16	12	0.8	0.4			31	Off-site. Left Bank Armored.
4	P2	15	11.4	1.1	0.7	0.6	0.5		On-site. Left Bank Armored.
5	R3	16	15	1.0	0.4			23.5	Left Bank Armored.
6	P3	22	12.6	1.8	1.0	0.6	1.2		Left Bank Armored.
7	R4	30	12	0.9	0.5			26	Left Bank Armored.
8	P4	29	11.5	1.8	0.8	0.5	1.3		
9	R5	14	15	0.6	0.3			22	
10	P5	24	11	1.2	0.6	0.5	0.7		
11	R6	30	11	0.8	0.6			22	
12	P6	52	12	2.2	1.0	0.5	1.7		
13	R7	14	15	0.4	0.2			29	
14	P7	37	8	1.3	0.8	0.4	0.9		
15	R8	28	9	0.7	0.4			25	
16	P8	24	16	2.5	1.2	0.4	2.1		
17	R9	38	21	0.5	0.2			40	
18	P9	54	9.5	2.1	1.1	0.5	1.6		Off-line inlet would connect near upper end.
19	R10	92	22	0.7	0.3			28	Off-line inlet would connect near lower end. Left bank contains many logs placed for bank protection.
20	P10	40	14	1.8	0.7	0.5	1.3		Upstream of project area.

A total of 61 pieces of wood were recorded in the surveyed reach, which included stumps and logs installed for bank protection or mitigation. The predominance of the pieces of wood were relatively small and deciduous, with only three being large enough to have been counted if strictly adhering to the USFS protocol where small wood is defined as being greater than 12 inches wide at a length of 25 feet from the large end.

Two wolman pebble counts were conducted in riffles within the project reach (**Appendix D**). The results indicate the substrate in the project reach is dominated by coarse (D50 = 17.9 mm) to very coarse (D50 = 41.6 mm) gravels. Fines less than 6 mm ranged from 26 to 37 percent.

Surface fines were most abundant along the stream edges where they settled out during past flood events, but present throughout. Small coal cinders were observed within the fines. Overall, this stream is impaired due to the high level of fines and poor quality (depth) of pools.

On-site riparian vegetation is generally native and providing shade. Areas of disturbance were limited to the left-bank where the existing house is located (downstream reach), and at a sewer or water main crossing (upstream most reach). The overall dominant riparian tree is red alder (*Alnus rubra*), followed by big-leaf maple (*Acer macrophylum*) intermixed with a few mature Douglas fir (*Pseudotsuga menziesii*) and black cottonwood (*Populus balsamifera*). There are a few small western red cedar (*Thuja plicata*) and bitter cherry (*Prunus emarginata*) trees on-site. The small western red cedar trees appear to have been part of a mitigation planting plan associated with the bank armoring along the lower reach.

Dominant shrubs include vine maple (*Acer circinatum*), salmonberry (*Rubus specabilis*), and a lesser amount of red-osier dogwood (*Cornus sericea*), Indian plum (*Oemleria cerasiformis*), and beaked hazelnut (*Corylus cornuta*). Indian plum and beaked hazelnut becomes more prevalent in the forested uplands. On-site areas that lacked shade included NSO numbers 9, 10, and 19. Reed canarygrass (*Phalaris arundacea*), and Himalayan blackberry (*Rubus armeniacus*) intermixed with bittersweet nightshade (*Solanum dulcamara*) and morning glory (*Convolvulus arvensis*), was noted in NSO numbers 9 and 10. The left-bank of NSO 19 is the general location of a sewer or water main crossing under Coal Creek and dominated by hydroseed grasses. Other non-native species in the buffer included Canada thistle (*Cirsium arvense*), bamboo (*Bambusa* sp.), Scotch broom (*Cytisus scoparius*), as well as several other upland weeds (cat's ear (*Hypochaeris radicata*), nipplewort (*Lapsana communis*), English plantain (*Plantago lanceolata*), and dandelion (*Taraxacum officinale*). English Ivy (*Hedera helix*) covered most of the trees and bank armoring along the left bank of the lower reach between the existing house and bank armoring in NSO 5, 6, and 7.

Other species noted along or near the stream channel during the survey included devil's club (*Oplopanax horridus*), bracken fern (*Pteridium aquilinum*), lady fern (*Athyrium filix-femina*), sword fern (*Polystichum munitum*), creeping buttercup (*Ranunculus repens*), Pacific bleeding heart (*Dicentra formosa*), field horsetail (*Equisetum arvense*), giant horsetail (*Equisetum telmateia*), and stinging nettle (*Urtica dioica*).

Vegetation along the stream bank is generally thick, but lacks an understory of small conifer trees, and non-native species are co-dominant in specific areas. The right-bank or south side of the stream channel is completely forested with a similar mixture of species noted above except the number of non-native species is less. Behind the somewhat narrow band of vegetation on the left bank or north side of the stream channel is the existing house, associated structures, road, and a relatively large clearing. A few snags, stumps, and downed logs were noted, but they are not abundant. Observations of fish during the site visit were limited to small salmonid fry that were present throughout the project reach.

3.2.2 Unnamed Tributary to Coal Creek

Jones & Stokes (2008) previously flagged the OHWM and defined the unnamed tributary that flows across the northern portion of the McIntosh parcels as a type F stream (**Appendix B**). A

biologist from DEA investigated this stream on August 6, 2009, and concluded it is a type N stream.

On-site, this tributary ranges from approximately 2 to 4 feet wide, while the gradient varies from approximately 2 to 6 percent. The substrate is dominated by gravel. At the time of the investigation, some water was present but barely trickling through the gravel with a maximum depth of 1 inch. Based on the presence of debris winter flows are significantly larger than the current flow. The overstory is dominated by big-leaf maple intermixed with a few scattered western red cedar trees. Douglas fir is also present, but becomes more prevalent further up the slope. A few snags were noted. The understory is dominated by vine maple and Indian plum, but some salmonberry is present. Sword fern and lady fern are also present. In areas that were more recently disturbed, red alder is the dominant tree and the understory contains Himalayan blackberry, giant horsetail, and several weeds. This portion looks like a type F but when looking at what occurs downstream, it becomes apparent that fish can not access this reach of stream.

Further downstream the gradient flattens out, flow goes subsurface, and sand and silt become the dominant substrate. The stream temporarily widens to 8 to 10 feet at a sewer line crossing. There are at least two riprap check dams in this area. The stream then goes into a wetland along the north side of 125th Avenue SE and the channel becomes braided. Most of the flow then goes into a roadside ditch along 125th Avenue SE and then into a buried culvert. The downstream side of the culvert was not located as it was somewhere on private property that was posted with no trespassing signs. Based on our assessment, fish can not access the section of stream on the McIntosh parcels for numerous reasons, including the culvert under 125th Avenue SE and barriers within the channel. It is also highly probably fish can not access the stream where it enters Coal Creek. Even if fish could access the McIntosh parcel, they would need to follow the retreating flows or become stranded. Based on the reconnaissance conducted by DEA, this stream is a type N water, which requires a 50-foot buffer.

3.2.3 Wildlife

The project area is within a generally forested riparian corridor that extends from I-405 northward to the headwaters of Coal Creek. Although this corridor is bisected by several roads and has been encroached upon by various developments, it is relatively extensive and provides suitable habitat for a wide array of wildlife. Habitat types within the project area that provide forage, cover, and breeding opportunities include deciduous forested uplands; Coal Creek; and PFO, PEM, and palustrine open water (POW) wetlands. These factors have resulted in a diverse assemblage of wildlife in the project vicinity.

Wildlife observations were recorded during the various site visits and are summarized in **Table 15**. It is important to note that the following list of species is limited to those observed during the site visits and is not all-inclusive. Numerous species will only use the project area seasonally or during migration; others may be very rare, cryptic, or nocturnal. Surveys were not conducted to target specific species.

Table 15: Project Area Wildlife Observations

#	Common Name	Comment
1.	Black-tail Deer	Tracks along stream channel.
2.	Beaver	Gnawed wood along stream channel from upstream somewhere.
3.	Great Blue Heron	Species of Local Importance based on city code (20.25H.150). Observed foraging along edge of Coal Creek.
4.	Long-toed Salamander	Downstream near RM 0.9 in an off-site wetland.
5.	Northwestern Salamander	Downstream near RM 0.9 where an adult and eggs were observed.
6.	Hawk	Downstream near RM 0.9 flying overhead.
7.	American Robin	Present and probably nesting on-site.
8.	Rufous-sided Towhee	Foraging in project area.
9.	Dark-eyed Junco	Downstream near RM 0.9.
10.	Black-capped Chickadee	Small group feeding in area.
11.	Downy Woodpecker	Downstream near RM 0.9.
12.	Mallard	Downstream near RM 0.9.
13.	Hummingbird	Downstream near RM 0.9, species uncertain, green back.
14.	Belted Kingfisher	Downstream near RM 0.9, very vocal along stream channel.
15.	American Crow	Flew through project area, old nest in Wetland E.
16.	Bushtit	Downstream near RM 0.9.
17.	Red Breasted Sap Sucker	Downstream near RM 0.9.
18.	Song Sparrow	Numerous and scattered about.
19.	Steller's Jay	Observed foraging on-site, nests on-site or very close.

4.0 HABITAT IMPACTS

The Lower Coal Creek Off-Line Sediment Pond will result in impacts to wetlands, streams, and stream buffers. The project includes clearing approximately 0.85 acre of land, of which 0.25 will be impervious. Land to be cleared includes an existing house, sheds, grassy clearing, areas used to store old cars and debris, as well as trees and shrubs. The project site includes Coal Creek and its buffer, an unnamed tributary to Coal Creek, and two wetlands. Impacts to these features are described below.

Wetland impacts include a total of 987 square feet (0.02 acre) of permanent wetland impact (**Table 16**). This includes 255 square feet of impact to Wetland 2, which will be excavated during construction of the pond. Wetland 2 is a 255-square-foot Category IV PEM wetland dominated by creeping buttercup and giant horsetail (Jones & Stokes 2008). The remaining 732 square feet of impact is to Wetland 1, immediately across from the pond outlet on the other side of Coal Creek where a log jam is proposed to be installed. This wetland was rated as a Category III PFO/SS1 wetland (Jones & Stokes 2008). Note, based on a site inspection conducted on August 6, 2009, this specific area of Wetland 2 does not appear to be wetland based on vegetation. Although some red alder and salmonberry line the stream bank in this spot, the vegetation is dominated by vine maple, Himalayan blackberry, and sword fern, with a partial overstory of big-leaf maple. Our impact calculations factor this area in as wetland due to the

previous wetland delineation work, but in reality it does not appear to be wetland. **Table 16** also outlines the type and ratio of proposed mitigation. A complete set of mitigation plans are contained within **Appendix E**. **Appendix A** includes a full set of design drawings.

Table 16: Wetlands Impact Summary

Wetland	Wetland Category	Wetland Class	Permanent Impact	Temporary Impact
1	III	Slope	732 SF	146 SF
2	IV	Depressional	255 SF	0.00 SF

The 987 square feet (0.02 acre) of permanent impact will be mitigated for by enhancing 5,148 square feet (0.12 acre) of existing Category III wetland (Wetland A) located at Site 2. Wetland A is dominated by red alder, but the understory is dominated by Himalayan blackberry and reed canarygrass. Wetland enhancement will occur at a ratio of 5.2:1. The 146 square feet (0.01 acre) of temporary impact to Wetland 1 will be mitigated for by restoring the area of impact (1:1 ratio).

Stream-related impacts are limited to Coal Creek, as no impact to the unnamed tributary or its buffer along the northern side of the McIntosh parcels will result from this project. Impacts to Coal Creek include both buffer and stream impacts. Buffer impacts include 17,914 square feet (0.41 acre) of permanent and 16,170 square feet (0.37 acre) of temporary impact. The project will also result in 7,603 square feet (0.17 acre) of temporary stream impacts at the inlet and outlet, installation of grade control logs, weirs, sweeper logs, and installation of the upstream log jam. No permanent stream impacts are proposed. **Table 17** summarizes stream-related impacts. Stream-related impacts include bank disturbance associated with the construction of the inlet, outlet, and bank logs. No impacts to the unnamed tributary will result from this project.

Table 17: Stream Impact Summary

Impacted	Permanent Impact	Temporary Impact
Coal Creek Buffer	17,914 SF	16,170 SF
Coal Creek	0.00	7,603 SF
Unnamed Tributary Buffer	0.00	0.00
Unnamed Tributary	0.00	0.00

Stream-related impacts will be mitigated for through both enhancement and restoration. Permanent stream buffer impacts will be mitigated for by enhancement at a ratio of 2.3:1. Temporary stream buffer impacts will be mitigated for by restoration at a ratio of 1:1. Temporary stream impacts will be mitigated for by restoration at a ratio of 1:1. A complete set of mitigation plans are contained within **Appendix E**. **Appendix A** includes a full set of design drawings.

Mitigation will occur on-site and downstream near RM 0.9 where the original in-line sediment pond was previously proposed to be constructed. Some impacts quantified above include installation of log jams, which are a habitat feature. Furthermore, the pond itself will provide off-channel refugia and rearing habitat, and has been designed to not strand fish. Lastly, the

proposed project will only capture suspended sediment that continues to impact spawning gravels in Coal Creek and will not capture gravels. An analysis of pre- and post-project wetland functions and stream baseline conditions is provided in the following sections.

4.1 WETLAND FUNCTIONS ANALYSIS

Project-related impacts to wetland functions were analyzed by comparing pre-project function scores with anticipated post-project conditions. Post-project conditions factor in the reduced buffer width, removal of vegetation during construction, implementation of a Temporary Erosion and Sedimentation Control (TESC) Plan, fish salvage, turbidity monitoring, mitigation plan and monitoring, and implementation of all permit conditions. Post-project conditions are separated into three categories:

1. Degrade. This condition is applicable if the function is anticipated to be degraded by the proposed project.
2. Maintain. This condition is applicable if the function is anticipated to be maintained by the proposed project.
3. Improve. This condition is applicable if the function is anticipated to be improved by the proposed project.

Table 18 summarizes wetland functions based on both the Ecology method and the Semi-Quantitative method, and the anticipated post-project condition to each function. This analysis indicates that the functions of Wetland 1 will be maintained, but that the functions of Wetland 2 will improve. Wetland 2 was a small 255-square-foot PEM Category IV depressional wetland dominated by horsetail and creeping buttercup. It does not directly interact hydrologically with Coal Creek, nor does it receive polluted runoff from adjacent upland. Overall, Wetland 2 provides minimal functions. It is being replaced by an off-line sediment pond capable of capturing 1,500 cubic yards of sediment on an annual basis. The project also includes installation of 32 pieces of LWD within two log jams; plus, the pond will provide seasonal refugia and off-channel rearing habitat. The mitigation plan includes planting native trees and shrubs, and installing habitat features. **Appendix E** contains a complete set of the mitigation plans.

Table 18: Wetland Function Summary

Wetland	Pre-Project	Post-Project	PROJECT EFFECTS TO FUNCTIONS
	Ecology Method		
1	Water Quality Score =12	Maintain	No change to this function is anticipated.
2	Water Quality Score =6	Improve	The 255-square-foot PEM wetland will be replaced by a pond capable of capturing 1,500 cubic yards of sediment.
1	Hydrology Score = 12	Maintain	No change to this function is anticipated.
2	Hydrology Score = 5	Improve	The flood-storage capacity of the sediment pond is exponentially larger than the 255-square-foot wetland.
1	Wildlife Score = 21	Maintain	No change to this function is anticipated.
2	Wildlife Score = 10	Improve	PEM wetland area will be replaced by shrubs, trees, and habitat features.
	Semi-Quantitative Assessment Method		
1	Flood/Storm Water Control = Medium (9 points)	Maintain	No change to this function is anticipated.
2	Flood/Storm Water Control = Low (5 points)	Improve	The flood storage capacity of the sediment pond is exponentially larger than the 255-square-foot wetland.
1	Base Flow = Medium (8 points)	Maintain	No change to this function is anticipated.
2	Base Flow = Low (5 points)	Improve	The area able to interact with groundwater will be larger within the sediment pond.
1	Water Quality Improvement = High (12 points)	Maintain	No change to this function is anticipated.
2	Water Quality Improvement = High (12 points)	Improve	The 255-square-foot PEM wetland will be replaced by a pond capable of capturing 1,500 cubic yards of sediment.
1	Natural Biological Support = Medium (24 points)	Maintain	No change to this function is anticipated.
2	Natural Biological Support = Low (17 points)	Improve	The 255-square-foot PEM wetland will be mitigated for by planting native trees and shrubs, and installing habitat features of greater value to wildlife than the current vegetation dominated by buttercup and horsetail.
1	Overall Habitat Function = Medium (7 points)	Maintain	No change to this function is anticipated.
2	Overall Habitat Function = Low (3 points)	Improve	The 255-square-foot PEM wetland will be mitigated for by planting native trees and shrubs, and installing habitat features of greater value to wildlife than the current vegetation dominated by buttercup and horsetail.
1	Specific Habitat Function = Medium (10 points)	Maintain	No change to this function is anticipated.
2	Specific Habitat Function = Low (5 points)	Improve	The 255-square-foot PEM wetland will be mitigated for by planting native trees and shrubs, and installing habitat features of greater value to wildlife than the current vegetation dominated by buttercup and horsetail.
1	Cultural/Socio-economic = Low (8 points)	Maintain	No change to this function is anticipated.
2	Cultural/Socio-economic = Low (6 points)	Improve	This function will increase since land ownership will change from private to public, and the pond will create educational potential.

4.2 SALMONID HABITAT EFFECTS MATRIX

The following Salmonid Habitat Effects Matrix (**Table 19**) describes potential impacts to salmonid habitat resulting from both construction and maintenance of the Coal Creek Off-line Sediment Pond. It considers all life stages and all salmonids (resident and anadromous), not just federally listed salmonids as would be the case in ESA documentation. The project effects to baseline conditions factor in the reduced buffer width, removal of vegetation during construction, implementation of a TESC Plan, fish salvage, turbidity monitoring, mitigation plan and monitoring, and implementation of all permit conditions. The effects to baseline conditions can be maintain, degrade, or improve. These effects can also change over time and vary depending on if considering either the local or watershed scale.

Table 19: Salmonid Habitat Project Effects Matrix

PATHWAY	INDICATORS	PROJECT EFFECTS TO BASELINE CONDITIONS
		Coal Creek
Water Quality	Temperature	Maintain -. Minor degradation will initially occur but this will likely be un-measurable and temporary. Some clearing of streamside vegetation will occur at the outlet but this should be off-set by mitigation plantings.
	Sediment	Improve. This improvement is based on the pond being off-line and designed to capture primarily sand. Implementation of TESC plan during construction and maintenance, implementation of a turbidity monitoring plan, and monitoring during construction and maintenance activities are also factored in to an assumed improved baseline condition.
	Chemical Contamination and Nutrients	Maintain +. A minor but probably un-measurable benefit could occur during flood events when mitigation plants interact with floodwaters.
Habitat Access	Physical Barriers	Maintain -. The project will not create fish passage barriers. Two in-stream weirs near the pond outlet each have a drop height of 0.8 feet.
Habitat Elements	Substrate	Improve. The potential removal of up to 1,500 cubic yards of sand will improve downstream substrate. The pond is designed to capture only sand, and gravels will continue to move downstream during high water events.
	LWD	Improve. The project includes installation of two log jams with a total of approximately 32 pieces of LWD.
	Pool Frequency	Maintain. No measurable change to this indicator is anticipated. The reduction in flow during storm events is not significant enough to degrade existing scour pools.
	Pool Quality	Maintain. No measurable change to this indicator is anticipated. The reduction in flow during storm events is not significant enough to degrade existing scour pools.
	Off-Channel Habitat	Improve. The off-channel pond will be accessible at the outlet year-round and create new rearing habitat.
	Refugia	Improve. The off-channel pond will be accessible at the outlet year-round and create new rearing habitat. Furthermore, the pond will provide refugia during flood events when a portion of the overall flow is diverted into the off-channel pond.
Channel Conditions and Dynamics	Width/Depth Ratio	Maintain. No change to the existing width/depth ratio of Coal Creek is anticipated to occur as a result of this project.
	Streambank Condition	Degrade → Maintain. The stream bank in the project reach will be degraded during construction and this impact will continue until plants installed along the banks of the pond become established. Once established, this indictor will generally be maintained.
	Floodplain Connectivity	Improve. This indicator will be improved since the off-channel pond will act as a side channel and is being constructed through uplands.

PATHWAY	INDICATORS	PROJECT EFFECTS TO BASELINE CONDITIONS
		Coal Creek
Flow/Hydrology	Change in Peak/Base Flows	Maintain. The pond would increase peak flow holding capacity during the fall and winter and therefore help attenuate flood events. Base flow is often influenced by the amount of permeable land available for infiltration. The project is removing some impervious area (existing structures) but also creating some (access roads). Although peak flow is improved, no change to base flow is anticipated. Therefore, the overall effect is maintain.
	Increase in Drainage Network	Maintain. The proposed project is not creating typical drainage features although the off-channel pond "could" be considered part of a drainage network. For purposes of this analysis, no change in the increase in the drainage network indicator is anticipated to result from implementation of this project.
Watershed Conditions	Road Density and Location	Degrade. There will be a net increase in roadway, so this indicator will be degraded.
	Disturbance History	Degrade → Maintain. Construction and yearly maintenance will result in an increase in the amount of disturbance to Coal Creek at the local scale. But the disturbance will temporary, seasonal, and of short duration.
	Riparian Reserve	Degrade → Maintain. The riparian reserve indicator in the project reach will be degraded during construction and this impact will continue until plants installed along the banks of the pond and stream channel become established. Once established, this indictor will generally be maintained.
Bull Trout Subpopulation Characteristics within Subpopulation Watersheds	Subpopulation Size	Maintain. No change in the subpopulation size indicator is anticipated.
	Growth and Survival	Maintain. No change in the growth and survival indicator is anticipated.
	Life History Diversity and Isolation	Maintain. No change in the life history diversity and isolation indicator is anticipated.
	Persistence and Genetic Integrity	Maintain. No change in the persistence and genetic integrity indicator is anticipated.
	Species Integration/Habitat Conditions	Maintain. No change in the species integration/habitat conditions indicator is anticipated.

Note: The presence of a **+** after **maintain** indicates a minor improvement and a **–** indicates a minor degradation of the indicator being assessed. The minor improvement or degradation was not considered significant enough to warrant changing the project effect determination to either improve or degrade.

4.3 IMPACTS TO SPECIES OF LOCAL IMPORTANCE

Species of local importance, as specified by the City of Bellevue, that have been documented on the project site include the Great blue heron and coho salmon. Species of local importance that could potentially exist in close proximity to the project site include the pileated woodpecker, Chinook salmon, long-legged myotis, and long-eared myotis. Species of local importance with a low probability of occurring on-site but potentially present with the Coal Creek basin include the Townsend's big-eared bat, red-tailed hawk, bald eagle, green heron, and Vaux's swift. Species-specific surveys have not been conducted. Vaux's swift and pileated woodpeckers have been reported in or adjacent to T24N R05E (Smith et al. 1997). The most common species of bats in the urbanized environment of greater Seattle area are probably the little brown bat (*Myotis lucifugus*) and big brown bat (*Eptesicus fuscus*). Bat surveys are rarely undertaken and identifying them to species can be problematic due to their nocturnal behavior and inability of bat detectors to distinguish their echolocation to species.

4.3.1 Great Blue Heron. Great blue heron nest in rookeries close to water. They feed along lake margins, marine shorelines, estuaries, wetlands, streams, and fields. No rookeries are

mapped by the WDFW PHS as occurring within two miles of the project site. However, a single great blue heron was observed foraging on-site in Coal Creek during the May 28, 2009, site visit. No species-specific mitigation measures are proposed since disturbance to this species would be temporary and limited to construction and maintenance activities.

4.3.2 Coho Salmon. Occurrence and life-history data was previously described under streams. Any action that affects water quality/quantity or habitat has the potential to impact this species. In-water work associated with the construction of the inlet and outlet will require fish removal and exclusion as required by the WDFW Hydraulic Project Approval (HPA). The minimum fish removal criteria are outlined in **Appendix F**. Fish removal must occur during construction of the inlet and outlet, and installation of grade control logs and log jams. Fish removal must also occur during maintenance activities. The design of the off-line sediment pond has negated the potential of fish being entrapped after flood events have subsided. The level of turbidity during construction and maintenance will be minimized through implementation of the TESC Plan, Turbidity Monitoring Plan (**Appendix G**), site review by the City of Bellevue Clearing and Grading Inspector and project Certified Erosion and Sediment Control Lead (CESCL); and implementation of the measures outlined in the HPA will minimize potential impacts to juvenile coho salmon present in the project area during construction or maintenance activities. Based on the available data, impacts to this species will be limited to when in-water works occur, should they be present during either construction or maintenance. Impacts will be limited to those removed from the immediate work area since some injury or mortality can occur during fish removal activities. Mortality typically occurs if an individual is very close to the anode or cathode when the electro-fisher is activated.

4.3.3 Pileated Woodpecker. Pileated woodpeckers inhabit mature and second growth forests that contain numerous snags and downed logs. They breed from mid March through mid July. They have large home ranges and are most abundant where stands of large conifers with snags and downed logs exist. Red alder snags are also used for foraging and large snags for nesting. No snags exist where the pond is proposed, but one was observed in the forest uplands to the north and another in the wetland on the south side of Coal Creek. Based on the site visits and understanding of this species, it may not use the project site for foraging or nesting but is likely present in the project vicinity. As such, it is likely occasionally present on-site as it moves through the general project area to forage where suitable habitat is present. The WDFW management recommendations include retaining snags, large stumps, and large downed logs (Rodrick and Milner 1991). The proposed mitigation plan includes installation of snags. Based on the available data, no impact to this species is anticipated.

4.3.4 Chinook Salmon. Small numbers of Chinook salmon have been observed in Coal Creek. Six Chinook salmon were observed spawning near RM 0.6 during October and November of 2004 (Tetra Tech/KCM 2005). The project reach is at approximate RM 1.4 and no barriers exist between RM 0.6 and the project site. Therefore, Chinook salmon could reach the project area to either spawn or access potentially suitable habitat upstream of the project area. Chinook salmon in the Lake Washington Basin are ocean-type. Based on a review of Chinook salmon juvenile and adult life-history data, this species of salmonid should not be present in the project area during the months of July and August. The WDFW in-water work window for Coal Creek is from July 1 through September 15. Therefore, construction and maintenance activities can be timed to avoid both juvenile and adult Chinook salmon. However, both juveniles and adults

could potentially move through the project area after construction. Based on the available data, no impact to this species or its habitat is anticipated.

4.3.5 Long-legged Myotis. A species that inhabits mountain coniferous forest typically found along forest edges. Maternity colonies have been found in attics, fissures in the ground, and under loose tree bark. This species has been documented in King County near Lake Washington, and most of King County is considered a core zone (Johnson and Cassidy 1997). Mature trees exist on-site (loose bark not observed), but no typical roosting habitat was observed during multiple site visits. However, potentially suitable habitat does exist within Coal Creek Park, and stream corridors often provide foraging potential. Therefore, the presence of this species in the general project vicinity can not be ruled out. WDFW management recommendations for this species were not located. Based on the available data, no impact to this species or its habitat is anticipated.

4.3.6 Long-eared Myotis. This species is generally distributed throughout Washington but more common in east-side forests. They have been documented in Pierce County, and most of King County is considered a core zone (Johnson and Cassidy 1997). Little data is available on its habitat needs, but they roost in trees, buildings, and caves. Forests appear to be its primary habitat. Mature trees exist on-site (loose bark not observed), but no typical roosting habitat was observed during multiple site visits. However, potentially suitable habitat does exist within Coal Creek Park, and stream corridors often provide foraging potential. Therefore, the presence of this species in the general project vicinity can not be ruled out. WDFW management recommendations for this species were not located. Based on the available data, no impact to this species or its habitat is anticipated.

4.3.7 Townsend's Big-eared Bat. Townsend's big-eared bat is extremely rare but does utilize caves and mines for nesting and hibernation, which are present in the middle and upper reaches of Coal Creek. No suitable roosting, nesting, or hibernation habitat occurs on the project site. Based on the available data, no impact to this species or its habitat is anticipated.

4.3.8 Red Tailed Hawk. Red-tailed hawks typically nest near the top of mature trees and hunt in open areas. Although mature trees are present on-site, no nests were observed during multiple site visits. No typical hunting or foraging habitat exists on or immediately adjacent to the project site. Based on the available data, no impact to this species or its habitat is anticipated.

4.3.9 Bald Eagle. Bald eagles nest along Lake Washington and inland where suitable habitat is present. No suitable nesting or foraging habitat occurs on or immediately adjacent to the project site. Suitable foraging habitat includes shoreline areas along Lake Washington, which is located approximately 0.8 mile west of project area. The closest nest is approximately two miles northwest of the project area. Based on the available data, no impact to this species or its habitat is anticipated.

4.3.10 Green Heron. This species of heron is small compared to the great blue heron. It is an uncommon species that nests in trees, usually near water. This species typically occurs near wetlands and ponds. They have been documented in King County. Since the project will not degrade typical habitat associated with this species, no impact is anticipated.

4.3.11 Vaux's Swift. The Vaux's swift is a summer resident of wooded areas in Washington that breed in mature and old-growth forests. Nesting occurs in hollow snags or broken tops of live trees, but they have also been observed nesting or roosting in chimneys and cliffs. No suitable nesting habitat was observed within the project footprint. The WDFW management recommendations include maintaining mature and old-growth forest, as well as snags in both young and old stands (Rodrick and Milner 1991). Leave all snags and large defective trees. This type of habitat is generally absent in the project area and no impact to this species is anticipated. Based on the available data, no impact to this species or its habitat is anticipated.

4.4 WATER QUALITY IMPACTS

Potential impacts to water quality could occur during either construction or maintenance activities. Impacts are primarily limited to temporary increases in turbidity. Impacts associated with an increase in water temperature have been minimized through design. Temperature-related impacts are considered temporary, localized, and discountable. However, these potential impacts can be reduced or avoided by implementation of the conservation and performance measures outlined below.

4.4.1 Conservation and Performance Measures

General

- A TESC Plan will be developed and implemented.
- A qualified Erosion and Control Inspector will review all sediment control measures twice per week during construction. Qualified means the inspector will be a CESCL.
- Turbidity will be monitored per the Turbidity Monitoring Plan outlined in **Appendix G**.
- A Spill Prevention Control and Countermeasures plan that meets Ecology standards will be developed and implemented for the project to ensure that all pollutants and products will be controlled and contained.
- Seasonal restrictions applied to work conducted below the OHWM will be as required by a project-specific HPA issued by the WDFW.
- Construction impacts will be confined to the minimum area necessary to complete the project.
- Removal of riparian vegetation will be minimized as much as possible.
- Implementation of the Mitigation Plan outlined in **Appendix E** will occur.

Water Quality/Erosion Control

- All BMPs will be installed according to City of Bellevue standards and will be inspected and maintained throughout the life of the project.
- Staging and soil stockpile areas will be limited to those outlined in the clearing and grading permit. Staging areas will be fenced.
- Spill kits will be kept on-site.
- Fuels and other potentially hazardous materials will be kept in a secured area. Secured means fenced, and locked during non-work hours.

- Secondary containment will be required for all hazardous materials. Spill containment is required for generators, parked equipment, porta-potty, fuels, solvents, etc.
- The project will comply with water quality conditions identified by Ecology.
- Wash water resulting from wash down of equipment or work areas will be contained for proper treatment and/or disposal, and will not be directly discharged into state waters.
- There will be no discharge of oil, fuels, or chemicals to surface waters, or onto land where there is a potential for reentry into surface waters.
- No cleaning solvents or chemicals used for tools or equipment cleaning will be discharged to ground or surface waters.
- The contractor will regularly check fuel hoses, oil drums, oil or fuel transfer valves, fittings, etc. for leaks, and will maintain and store materials properly to prevent spills.
- BMPs will be used on all project activities to control and prevent sediments from entering aquatic systems.

In-water and Over-water Work

- All fish will be removed from the work area prior to any in-water work activities per the Fish Salvage Plan in **Appendix F**.
- Materials removed from below the OHWM, will be placed in an upland location where they cannot enter water bodies.
- Materials, such as riprap and LWD, placed within the water, will be free of sediment and or other contaminants.
- Water pumped from work isolation areas will be treated to remove suspended sediments prior to returning to the water body. Discharge will occur in such a manner as not to cause erosion.
- Mechanical equipment will not enter the stream channel until the project area has been dewatered and fish salvage has been completed.
- Mechanical equipment operating in the project area will be inspected daily for leaks. Any equipment found to be leaking will immediately be fixed or removed from the project site.

Operational and Maintenance

- The pond will be inspected during and immediately after significant storm events.
- Prior to annual pond cleaning (sand removal), a city engineer and biologist will inspect the site to determine the level of required maintenance.
- A biologist will perform fish salvage activities as needed during maintenance.
- Turbidity levels will be monitored during maintenance per **Appendix G**.
- Pond maintenance will occur during the WDFW in-water work window.
- If, for some unforeseen reason, work on the pond must occur outside the approved in-water work window, these actions will be coordinated with the WDFW and Corps.

5.0 MITIGATION

Mitigation will occur as outlined in **Appendix E**. However, the mitigation plans contained within this report is a draft that has not yet gone through formal review by the regulatory agencies. Therefore, these plans are presented for review and approval. Final approved plans will be signed by the landscape architect.

The mitigation plans includes a significant amount of enhancement and restoration at two different sites. Areas on-site that are disturbed by construction-related activities will be restored to the maximum extent possible. Specific areas that can not be replanted with native vegetation include the proposed access road, spillway apron, and areas within the pond below the 94-foot elevation. All other areas will be planted with native trees and shrubs, plus snags will be added. Riparian habitat along Coal Creek is generally native and thick, except in areas outlined in the plan where enhancement is proposed. In order to provide additional mitigation, enhancement activities are proposed downstream of the project site in the vicinity of RM 0.9. This area contains native deciduous trees and shrubs, but generally lacks a coniferous component. This area will be infused with numerous conifers, which will improve wildlife habitat, and eventually provide additional shade and LWD. The mitigation plan does not highlight additional project-related actions that are beneficial. These additional beneficial project elements are outlined below:

1. The project will remove up to 1,500 cubic yards of sand and sediment on an annual basis. This will improve spawning habitat downstream of the project site, reduce buildup of the delta, and reduce flooding.

2. Gravels will continue to flow through the mainstem of Coal Creek.

3. The off-line sediment pond will provide rearing habitat and refugia for juvenile salmonids.

4. The project includes adding LWD (log jams) in Coal Creek.

6.0 REFERENCES

City of Bellevue. 2007. Unpublished data. Electrofish data from various projects along Coal Creek. Data provided by Kit Paulsen, Environmental Scientist, Engineering Division, Bellevue Utilities.

Cooke. 2000. *Wetland and Buffer Functions Semi-Quantitative Assessment Methodology (SAM*) – Final Working Draft User's Manual. February 2000. Seattle, Washington.

———. 1997. *A Field Guide to the Common Wetland Plants of Western Washington & Northwestern Oregon.* Published by Seattle Audubon Society.

Dvornich, K.M., K.R. McAllister, and K.B. Aubry. 1997. *Amphibians and Reptiles of Washington State – Location Data and Predicted Distributions.* Washington State Gap Analysis Project Final Report – Volume 2.

Johnson, R.E., and K.M. Cassidy. 1997. *Terrestrial Mammals of Washington State – Location Data and Predicted Distributions, Volume 3* in Washington State Gap Analysis – Final Report, (K. M. Cassidy, C. E. Grue, M. R. Smith and K. M. Dvornich, eds.), Washington Cooperative Fish and Wildlife Research Unit, University of Washington, Seattle, 304 pp.

Jones & Stokes. 2008. Wetland and Stream Delineation – McIntosh Parcels. Prepared for the City of Bellevue. Dated April 23, 2008.

Kerwin, J. 2001. *Salmon and Steelhead Habitat Limiting Factors Report for the Cedar – Sammamish Basin (Water Resource Inventory Area 8).* Washington State Conservation Commission. Olympia, Washington.

King County. 2001. *Final Adopted May Creek Basin Action Plan*. April 2001. Obtained via the world wide web at: http://your.kingcounty.gov/dnrp/library/1998/kcr726/FINAL-May-Creek-Basin-Plan-4-16-01.pdf

———. 1994. *Water Quality of Small Lakes and Streams – Western King County 1990 – 1993*. Publication 946. King County Building and Land Development Division. Seattle, Washington.

———. 1990. *King County Sensitive Areas Map Folio*. King County, Washington.

King County and City of Bellevue. 1987. *Coal Creek Basin Plan and Final Environmental Impact Statement*. February 1987.

Landau Associates, 2005. *Updated Biological Evaluation and Essential Fish Habitat Evaluation for Storm Drainage Infrastructure Rehabilitation Project Interstate 405 Regional Detention Pond – Coal Creek, Bellevue, Washington.* Prepared for the City of Bellevue.

Meehan. 1991. *Influences of Forest and Rangeland Management on Salmonid Fishes and their Habitats.* American Fisheries Society Special Publication 19.

NOAA Fisheries. 1996. *Making Endangered Species Act Determinations of Effect for Individual or Grouped Actions at the Watershed Scale*. National Marine Fisheries Service (NMFS), Environmental and Technical Services Division, Habitat Conservation Branch. Lacey, Washington.

Reiser and Bjornn. 1979. *Habitat Requirements of Anadromous Salmonids.* USFS General Technical Report DNW-96. Pacific Northwest Forest and Rangeland Experiment Station. Portland, Oregon.

Rodrick and Milner. 1991. Management Recommendations for Washington's Priority Habitats and Species. Washington Department of Wildlife and Wildlife Management, and Habitat Management Divisions, Olympia, WA.

Smith, M.R., P.W. Mattocks, Jr., and K.M. Cassidy. 1997. *Breeding Birds of Washington State. Volume 4 in Washington State Gap Analysis – Final Report*, (K.M. Cassidy, C.E. Grue, M.R. Smith, and K.M. Dvornich, eds.), Seattle Audubon Society Publications in Zoology No. 1, Seattle, 538 pp.

Tetra Tech/KCM. 2005. *Coal Creek Stabilization Program Draft Environmental Impact Statement – Volume 1 and 2*. Prepared for the City of Bellevue, Utilities Department, Engineering Division, Bellevue, Washington. Project #3540008.

U.S. Department of Agriculture (USDA), Natural Resources Conservation Service (formerly Soil Conservation Service). 1991. Hydric Soils of the State of Washington.

———, Soil Conservation Service. 1973. *Soil Survey of King County Area, Washington.* Washington Agricultural Experiment Station.

U.S. Department of the Interior. 1988. Mercer Island Quadrangle – National Wetlands Inventory Map. U.S. Department of the Interior, Fish and Wildlife Service, National Wetland Inventory (NWI).

U.S. Fish and Wildlife Service (USFWS). 1998. *A Framework to Assist in Making Endangered Species Act Determinations of Effect for Individual or Grouped Actions at the Bull Trout Subpopulation Watershed Scale*. Lacey, Washington.

U.S. Forest Service (USFS). 2000. Stream Inventory Handbook Level I and II. Region 2, 2000 ~ Version 2.0. Available on the world wide web: http://www.fs.fed.us/r6/water/fhr/sida/handbook/Stream-Inv-2000.pdf

Washington State Department of Ecology (Ecology). 2008. *River and Stream Water Quality Monitoring Report for Water Year 2007*. Ecology Publication No. 08-03-019. Olympia, Washington. Available on the world wide web: http://www.ecy.wa.gov/pubs/0803019.pdf

———. 2005. 2004 Water Quality Assessment (Final) - Category 5 Listings for WRIA 8. Available on the www at http://www.ecy.wa.gov/programs/wq/303d/2002/2004_documents/wria_pdfs-5final/kk-active-5-wria8.pdf

Washington State Department of Fish and Wildlife (WDFW). 2007. Priority Habitat and Species Data - Habitats and Species Report in the Vicinity of T24R05E Section 16 dated March 07, 2007.

———. 1994. *1992 Washington State Salmon and Steelhead Stock Inventory*. Olympia, Washington.

Washington Department of Natural Resources (WDNR). 2007. Washington Natural Heritage Program Rare Plant and High Quality Native Ecosystem Data Search dated March 14, 2007.

Williams, R.W., R.M. Laramie and J.J. Ames. 1975. *A Catalog of Washington Streams and Salmon Utilization – Volume I, Puget Sound Region.* Washington Department of Fisheries.

Wydoski and Whitney. 1979. *Inland Fishes of Washington*. University of Washington Press. Seattle, Washington.

APPENDIX A

SITE PLAN

This page intentionally left blank.

SECTION 16	TOWNSHIP 24N	RANGE 5E	LAT 47°33'46.00" N, LONG 122°10'17.00" W

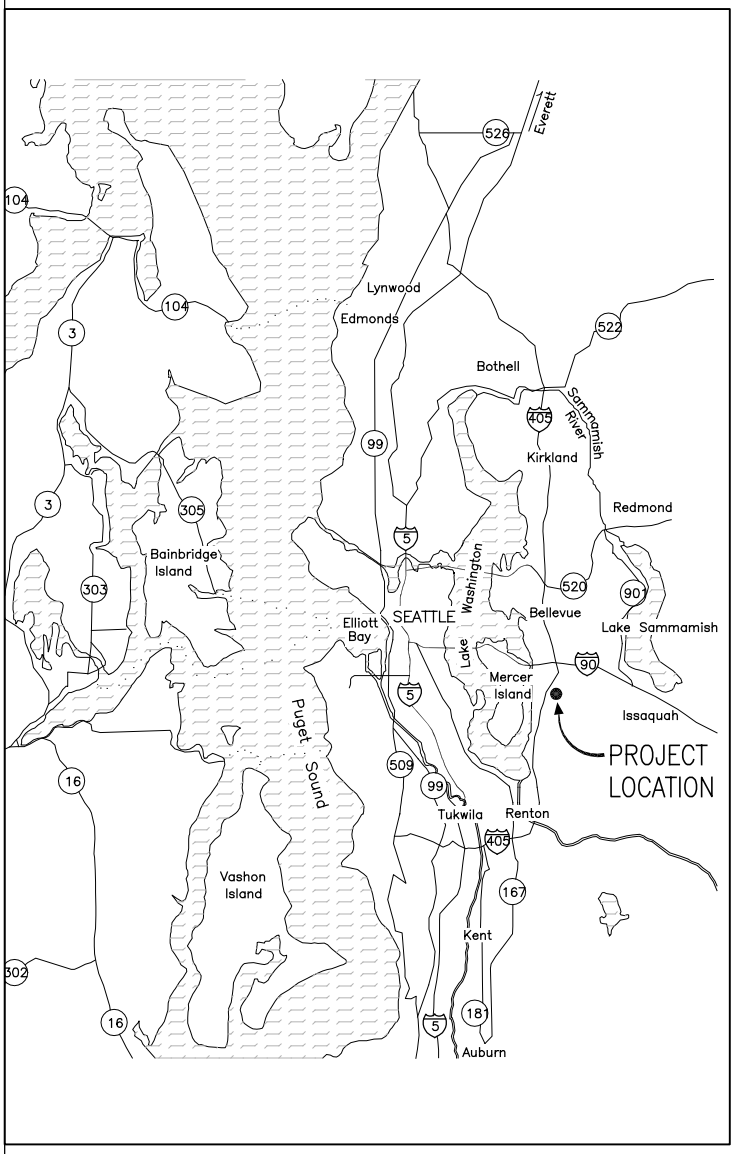

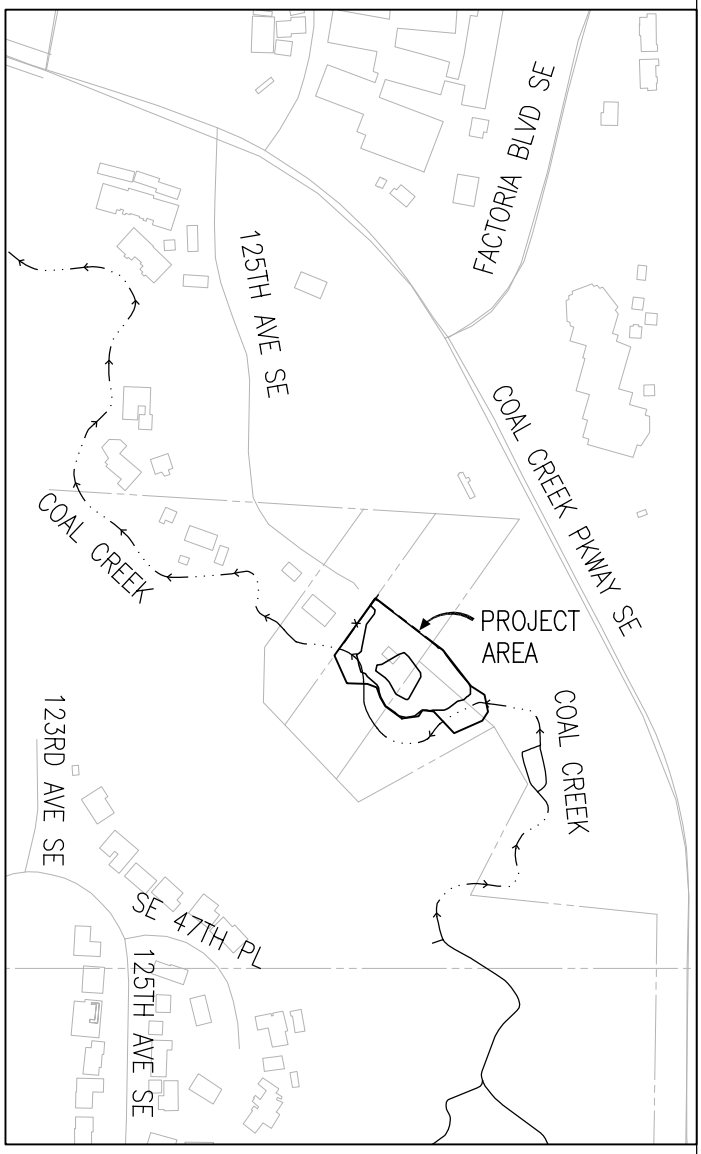

LOCATION MAP

APPROMXIMATE SCALE :
1" = 8 MILES

1"=8 mi 4 0 4 8
Scale Miles

VICINITY MAP

SCALE: 1" = 400'

1"=400' 200 0 200 400
Scale Feet

PROJECT NAME: LOWER COAL CREEK OFF-LINE SEDIMENTATION POND

PURPOSE: SEDIMENT REMOVAL

DATUM: NAVD 88

REFERENCE NO.: N/A

COUNTY OF: KING

WATER BODY: COAL CREEK

PROJECT LOCATION MAPS

SITE LOCATION ADDRESS: 4641 125TH AVE SE
BELLEVUE, WA 98006

APPLICATION BY: CITY OF BELLEVUE

DATE:

LEGEND

SYMBOL EXISTING	DESCRIPTION
C	CEDAR TREE
P	PINE TREE
A	ALDER TREE
AP	APPLE TREE
F	FIR TREE
M	MAPLE TREE
COT	COTTONWOOD TREE
	FIRE HYDRANT
	WATER VALVE
	SANITARY SEWER MANHOLE
	MISCELLANEOUS MANHOLE
	TELECOM DEVICE
	UTILITY POLE
	WETLAND FLAG
	WETLAND
	PROPERTY BOUNDARY
	CREEK CENTERLINE
	WETLAND BOUNDARY
SS	SANITARY SEWER (EXIST)
P	OVERHEAD POWER (EXIST)
	ORDINARY HIGH WATER MARK (OHWM)
	ROCKERY (EXIST)

SYMBOL PROPOSED	DESCRIPTION
	LOG JAM WITH ROOTWADS
	LOG
	MANHOLE
	BOULDER
	REMOVAL
	CONSTRUCTION LIMITS
	STREAMBED GRAVEL
	CONCRETE
	CRUSHED SURFACING TOP COURSE

PROJECT NAME: LOWER COAL CREEK OFF-LINE SEDIMENTATION POND

PURPOSE: SEDIMENT REMOVAL

DATUM: NAVD 88

REFERENCE NO.: N/A

COUNTY OF: KING

WATER BODY: COAL CREEK

LEGEND

SITE LOCATION ADDRESS: 4641 125TH AVE SE BELLEVUE, WA 98006

APPLICATION BY: CITY OF BELLEVUE

DATE:

ABBREVIATIONS

APPROX	APPROXIMATE
AVG	AVERAGE
CHAN	CHANNEL
CL	CENTERLINE
COB	CITY OF BELLEVUE
CY, CU YD	CUBIC YARD
DIA, DIAM	DIAMETER
E	EAST
EL, ELEV	ELEVATION
EXIST, EX	EXISTING
GC	GRADE CONTROL LOG
HORIZ	HORIZONTAL
IE	INVERT ELEVATION
LWD	LARGE WOODY DEBRIS
MAX	MAXIMUM
MH	MANHOLE
MIN	MINIMUM
N	NORTH
NE	NORTHEAST
NTS	NOT TO SCALE
NW	NORTHWEST
OHWM	ORDINARY HIGH WATER MARK
PCD	PLANNING AND COMMUNITY DEVELOPMENT
PVC	POLYVINYL CHLORIDE
S	SOUTH, SLOPE
SD	STORM DRAIN
SE	SOUTHEAST
SHT	SHEET
SS	SANITARY SEWER
SSMH	SANITARY SEWER MANHOLE
STA	STATION
ST	STREET
SW	SOUTHWEST
TYP	TYPICAL
VERT	VERTICAL
W	WEST, WATER
WSEL	WATER SURFACE ELEVATION

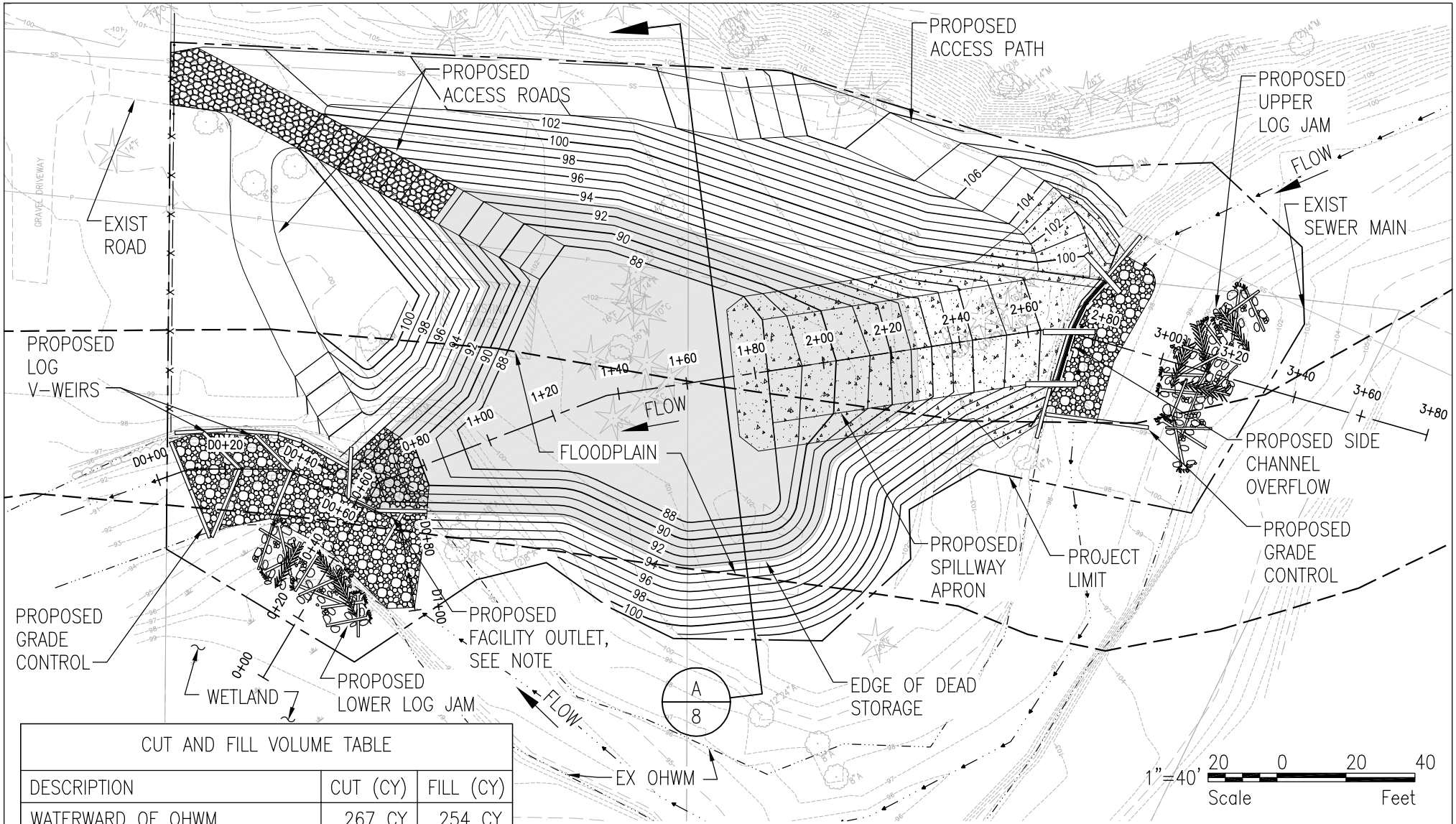

CUT AND FILL VOLUME TABLE		
DESCRIPTION	CUT (CY)	FILL (CY)
WATERWARD OF OHWM	267 CY	254 CY
OUTSIDE WATERWARD OF OHWM	7670 CY	292 CY
TOTAL	7937 CY	546 CY

NOTE: FACILITY OUTLET TO BE MAINTAINED AS FISH PASSABLE AS LONG AS THERE IS FLOW IN COAL CREEK.

PLAN

SCALE: 1" = 40'

PROJECT NAME: LOWER COAL CREEK OFF-LINE SEDIMENTATION POND PURPOSE: SEDIMENT REMOVAL DATUM: NAVD 88	REFERENCE NO.: N/A COUNTY OF: KING WATER BODY: COAL CREEK	SITE LOCATION ADDRESS: 4641 125TH AVE SE BELLEVUE, WA 98006	OVERALL SITE PLAN APPLICATION BY: CITY OF BELLEVUE DATE: SHEET 4 OF 32

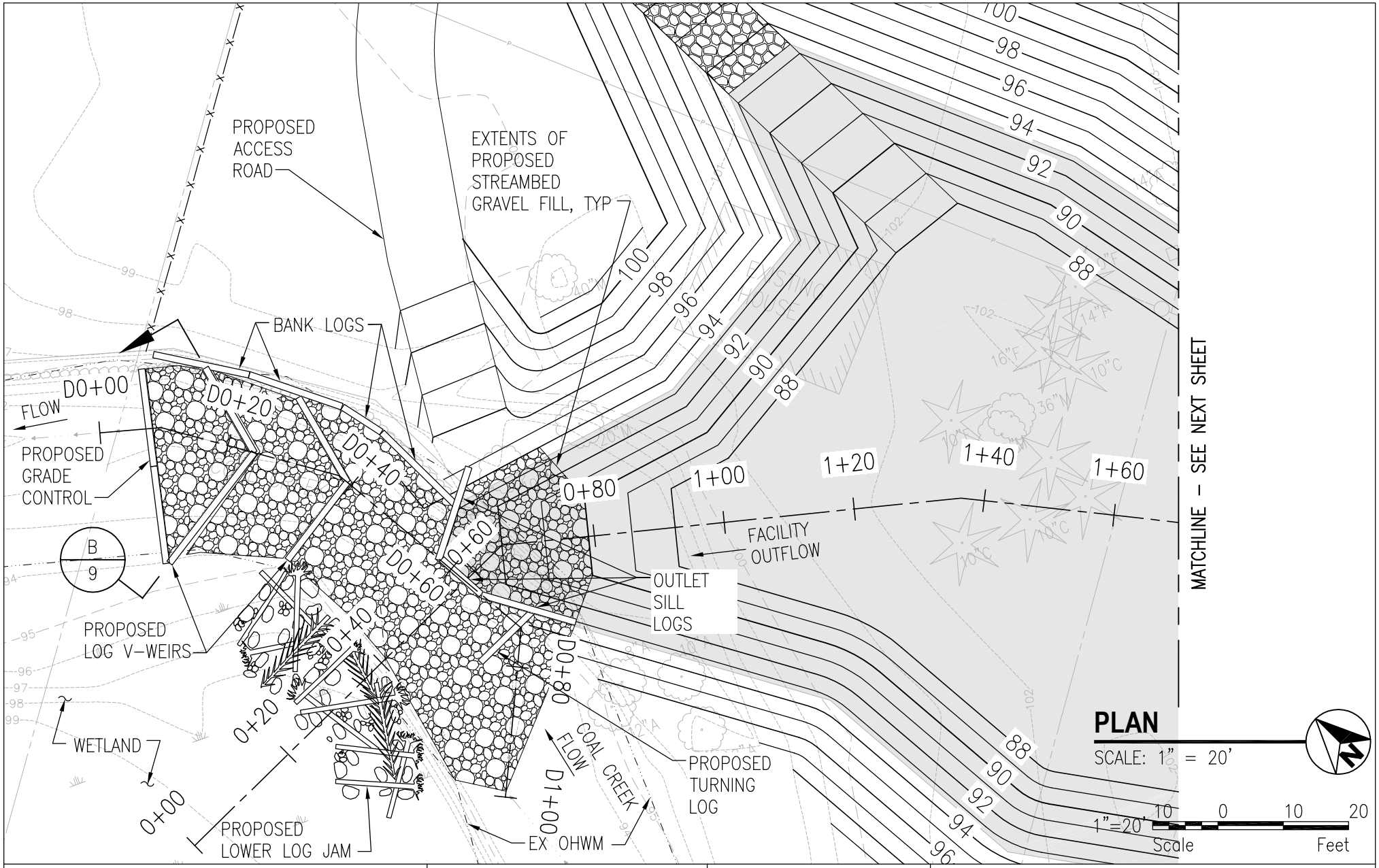

PROJECT NAME: LOWER COAL CREEK OFF-LINE SEDIMENTATION POND	REFERENCE NO.: N/A	SITE LOCATION ADDRESS:	OUTLET PLAN
PURPOSE: SEDIMENT REMOVAL	COUNTY OF: KING	4641 125TH AVE SE BELLEVUE, WA 98006	APPLICATION BY: CITY OF BELLEVUE
DATUM: NAVD 88	WATER BODY: COAL CREEK		DATE: SHEET 5 OF 32

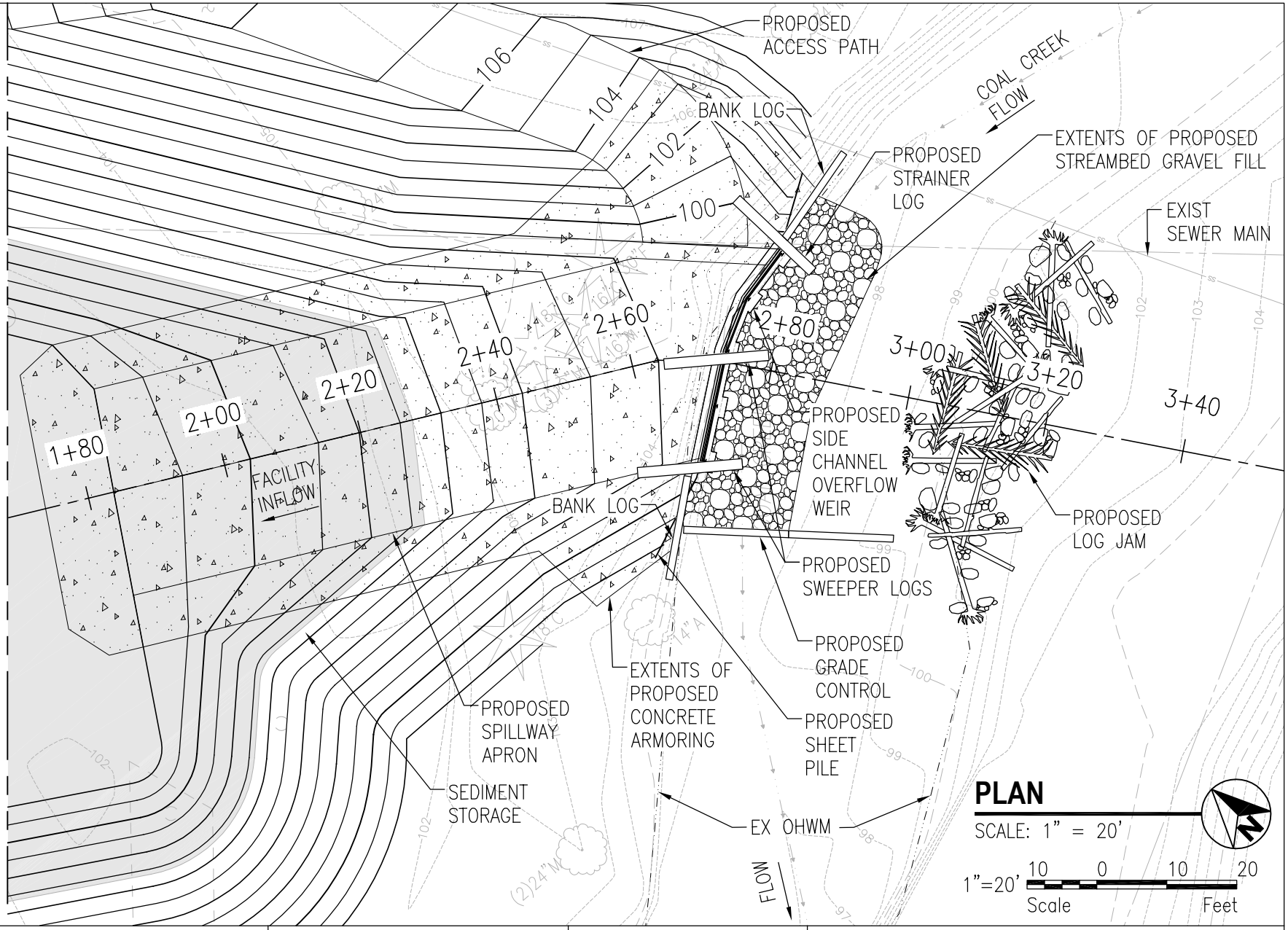

PROJECT NAME: LOWER COAL CREEK OFF-LINE SEDIMENTATION POND	REFERENCE NO.: N/A	SITE LOCATION ADDRESS:	INLET PLAN
PURPOSE: SEDIMENT REMOVAL	COUNTY OF: KING	4641 125TH AVE SE BELLEVUE, WA 98006	APPLICATION BY: CITY OF BELLEVUE
DATUM: NAVD 88	WATER BODY: COAL CREEK		DATE: SHEET 6 OF 32

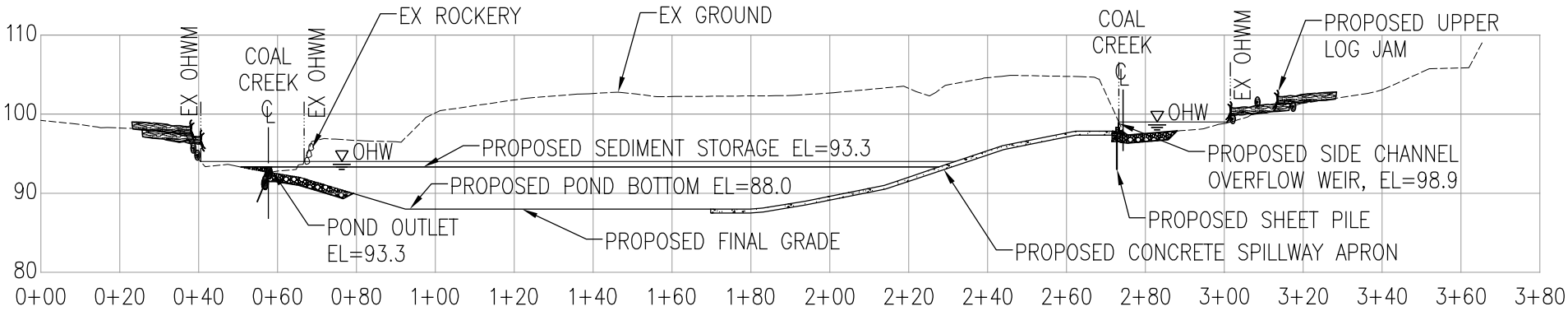

POND PROFILE

SEDIMENTATION POND
SCALE: 1"=40' HORIZ
1"=20' VERT

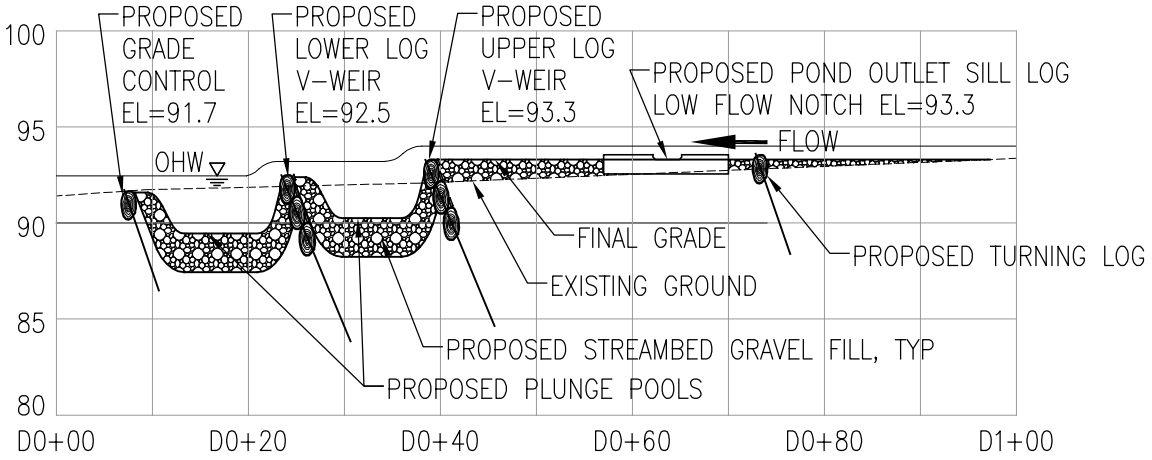

PROFILE D

DOWNSTREAM WEIRS
SCALE: 1"=20' HORIZ
1"=10' VERT

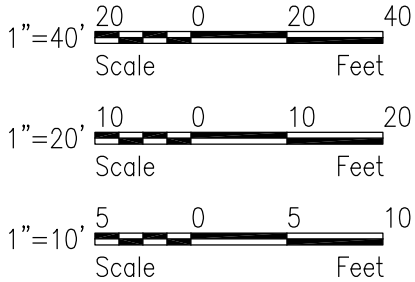

PROJECT NAME: LOWER COAL CREEK OFF-LINE SEDIMENTATION POND PURPOSE: SEDIMENT REMOVAL DATUM: NAVD 88	REFERENCE NO.: N/A COUNTY OF: KING WATER BODY: COAL CREEK	SITE LOCATION ADDRESS: 4641 125TH AVE SE BELLEVUE, WA 98006	PROFILES APPLICATION BY: CITY OF BELLEVUE DATE: SHEET 7 OF 32

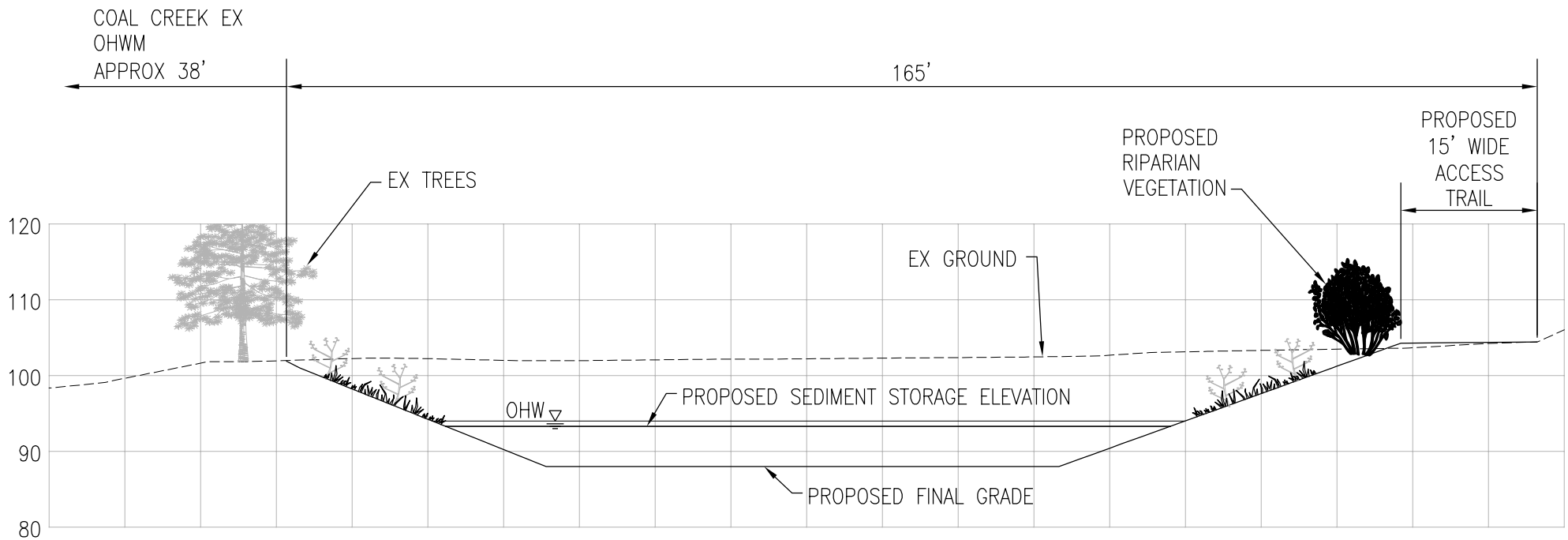

SECTION

A / 4

SEDIMENTATION POND
SCALE: 1"=20"

1"=20' 10 0 10 20
Scale Feet

PROJECT NAME: LOWER COAL CREEK OFF-LINE SEDIMENTATION POND PURPOSE: SEDIMENT REMOVAL DATUM: NAVD 88	REFERENCE NO.: N/A COUNTY OF: KING WATER BODY: COAL CREEK	SITE LOCATION ADDRESS: 4641 125TH AVE SE BELLEVUE, WA 98006	POND SECTION APPLICATION BY: CITY OF BELLEVUE DATE: SHEET 8 OF 32

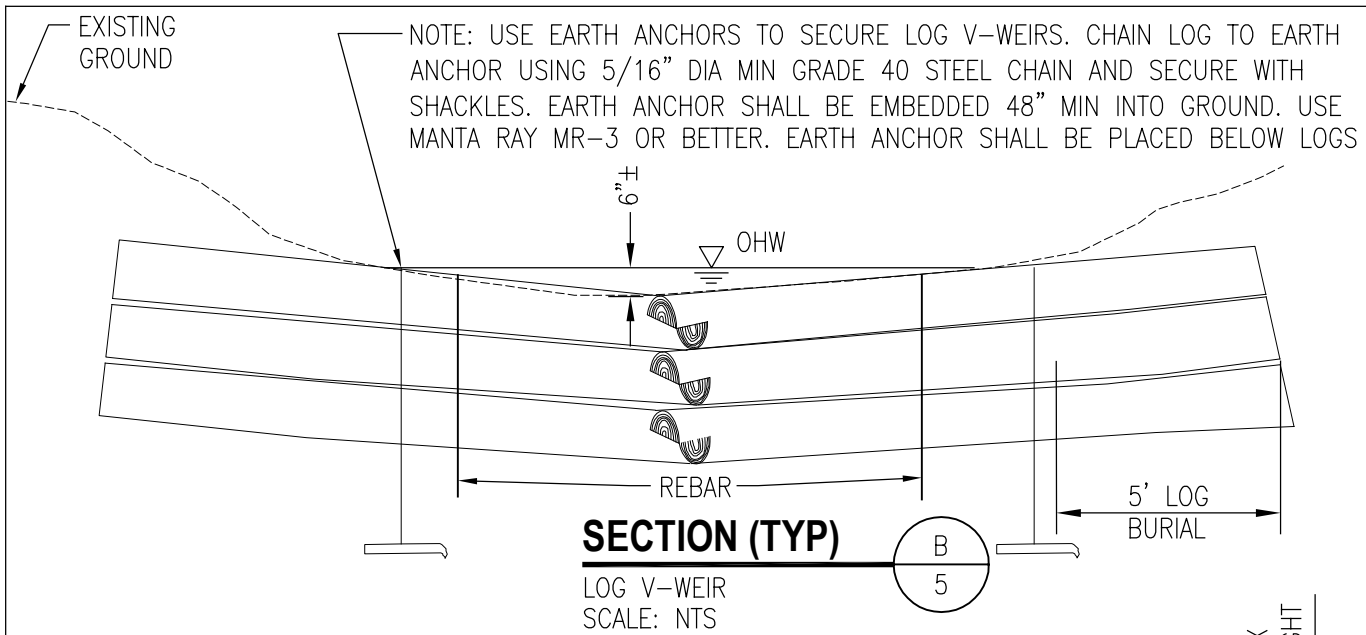

SECTION (TYP)

LOG V-WEIR
SCALE: NTS

NOTES:

1. MINIMIZE EXCAVATION AND FILL VOIDS WITH SMALLER ROCKS, GRAVELS, AND NATIVE FILL MATERIALS.
2. LOGS SHALL BE 18"-24" DIAMETER DOUGLAS FIR.
3. DRILL 1-1/8" DIA HOLE IN TOP LOG AND DRIVE 1" DIA REBAR THROUGH LOGS, 6' OC, MIN. BEND REBAR IN DIRECTION OF THE GRAIN FLUSH WITH TOP OF LOG.
4. FILL OVER GEOTEXTILE WITH MIX OF STREAMBED GRAVEL AND RIPRAP.
5. EXTEND GEOTEXTILE MINIMUM 6' UPSTREAM OF LOGS.
6. USE 2x4 WOOD CLEAT TO ATTACH GEOTEXTILE ALONG FULL LENGTH OF LOG.

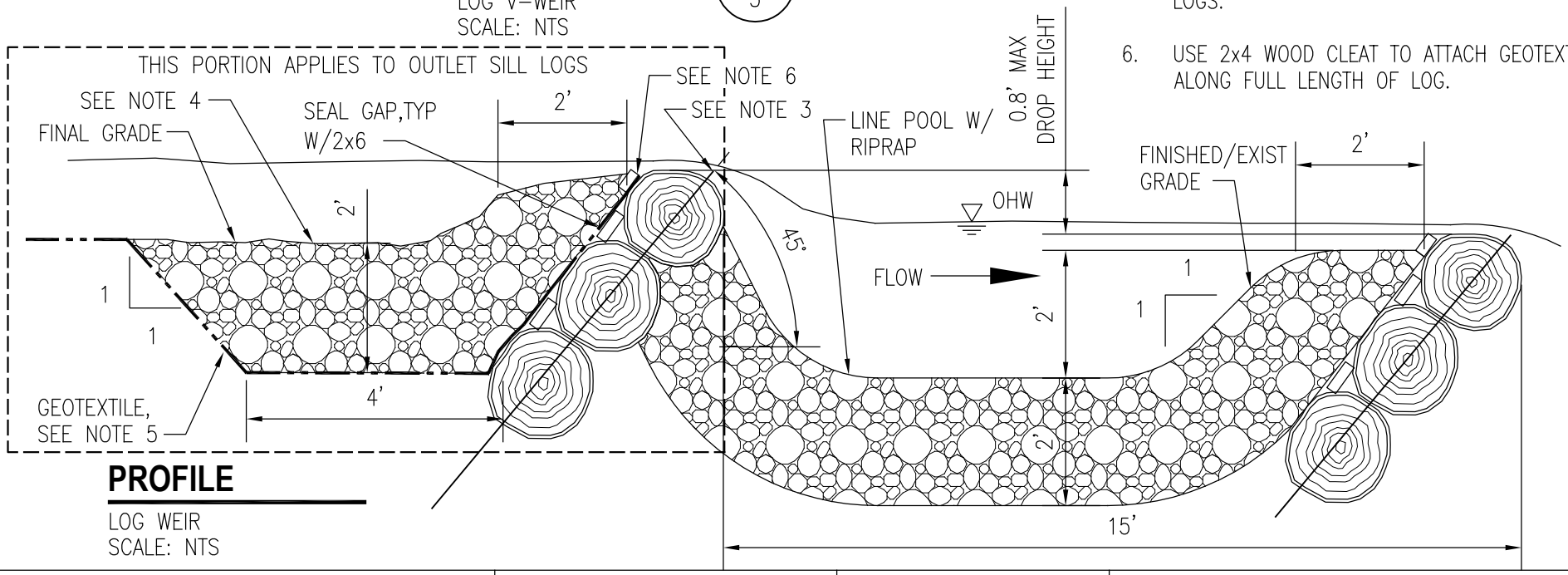

PROFILE

LOG WEIR
SCALE: NTS

PROJECT NAME: LOWER COAL CREEK OFF-LINE SEDIMENTATION POND	REFERENCE NO.: N/A	SITE LOCATION ADDRESS:	OUTLET LOG V-WEIR DETAILS
PURPOSE: SEDIMENT REMOVAL	COUNTY OF: KING	4641 125TH AVE SE BELLEVUE, WA 98006	APPLICATION BY: CITY OF BELLEVUE
DATUM: NAVD 88	WATER BODY: COAL CREEK		DATE: SHEET 9 OF 32

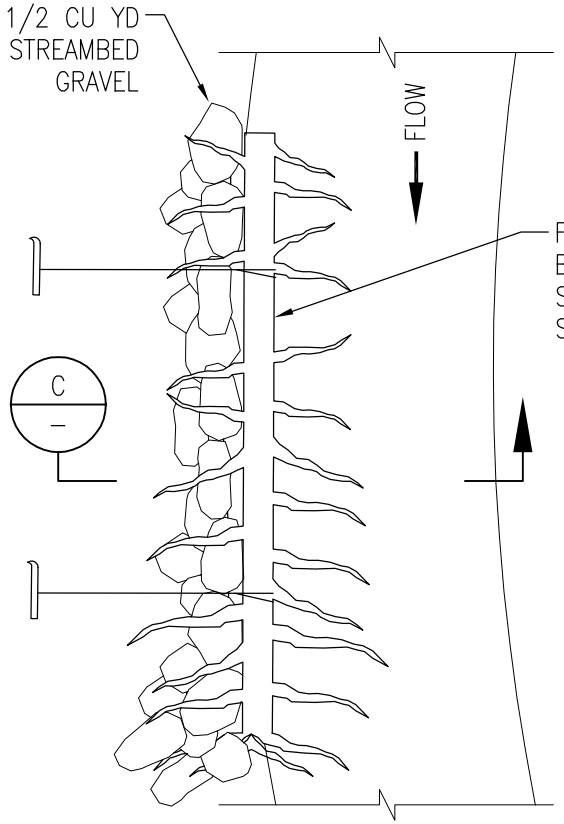

DETAIL

BANK LOG
SCALE: NONE

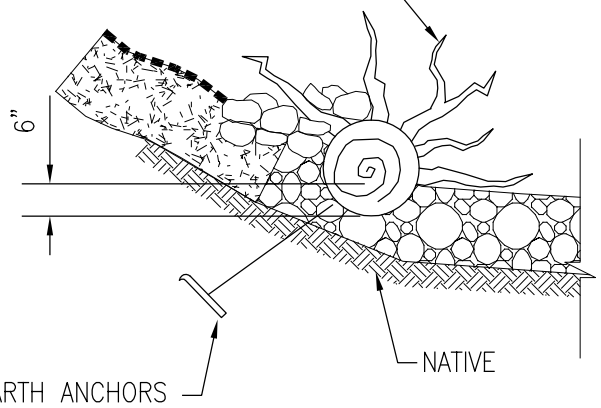

SECTION

C
–

BANK LOG
SCALE: NONE

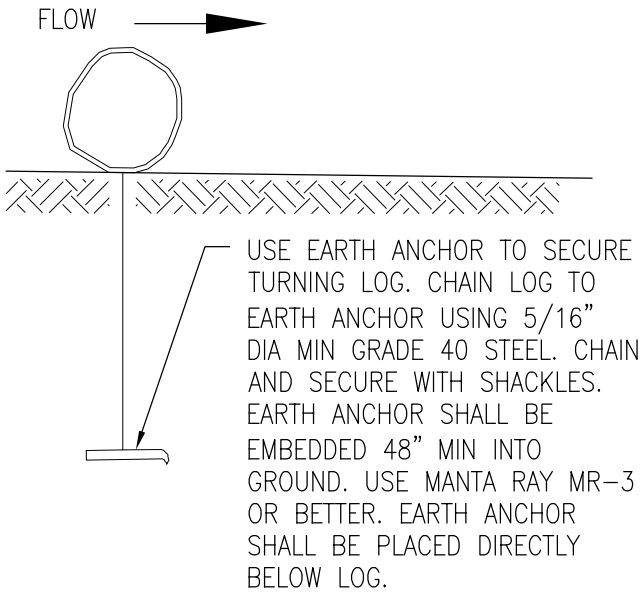

DETAIL

GRADE CONTROL LOG/TURNING LOG
SCALE: NONE

PROJECT NAME: LOWER COAL CREEK OFF-LINE SEDIMENTATION POND	REFERENCE NO.: N/A	SITE LOCATION ADDRESS:	MISCELLANEOUS LOG DETAILS
PURPOSE: SEDIMENT REMOVAL	COUNTY OF: KING	4641 125TH AVE SE BELLEVUE, WA 98006	APPLICATION BY: CITY OF BELLEVUE
DATUM: NAVD 88	WATER BODY: COAL CREEK		DATE: SHEET 10 OF 32

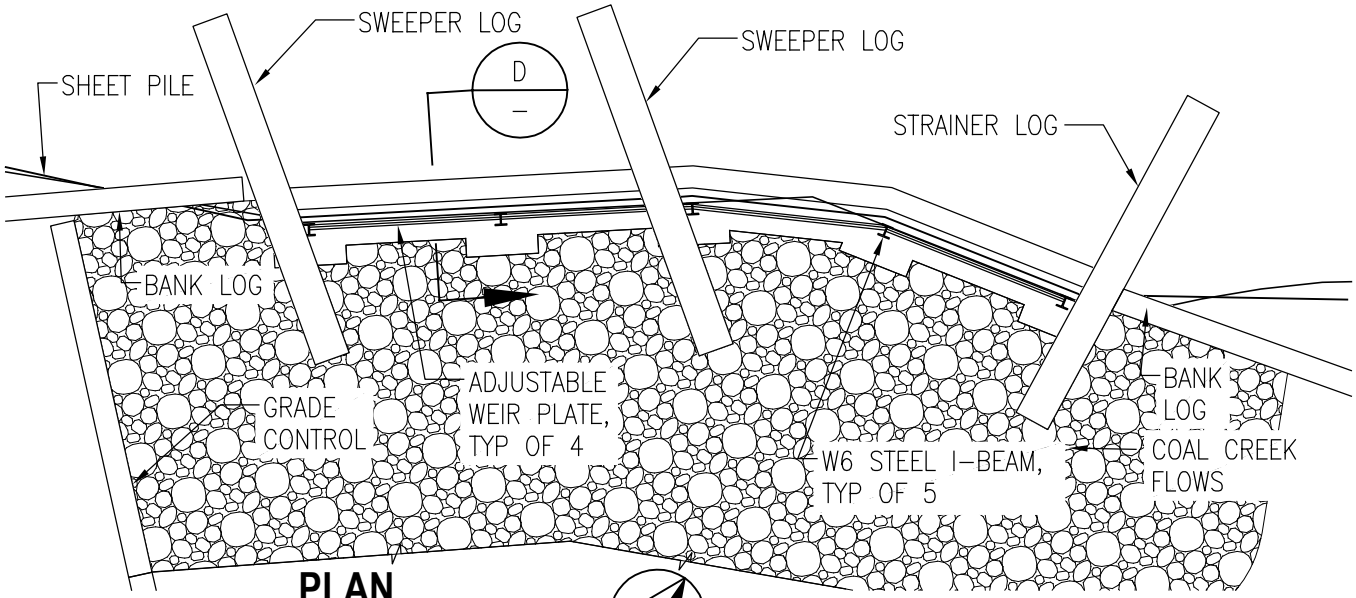

PLAN

SIDE CHANNEL OVERFLOW
SCALE: 1/8"=1'

NOTE: SWEEPER AND STRAINER LOGS SHALL BE ATTACHED TO I–BEAM. LOGS SHALL BE TIED TO THE SPILLWAY ON POND SIDE OF WEIR TO PREVENT ROTATION.

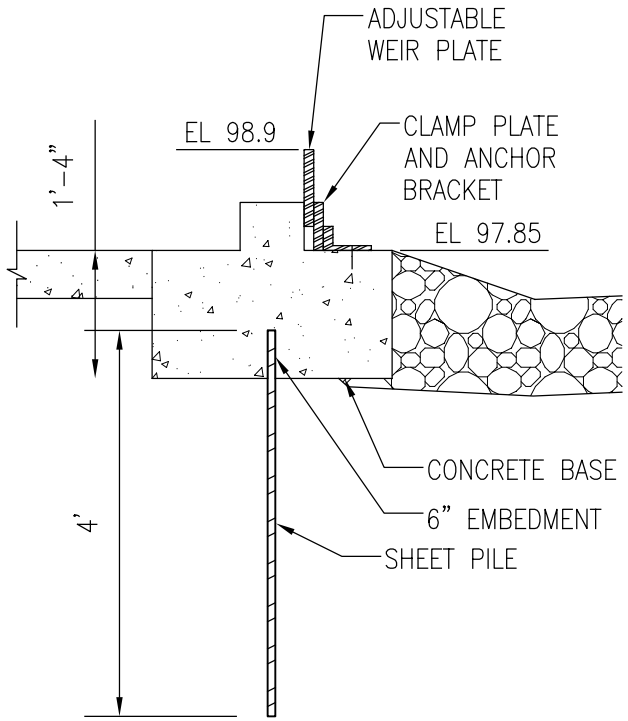

SECTION

D
–

SIDE CHANNEL OVERFLOW
SCALE: 1/2"=1'

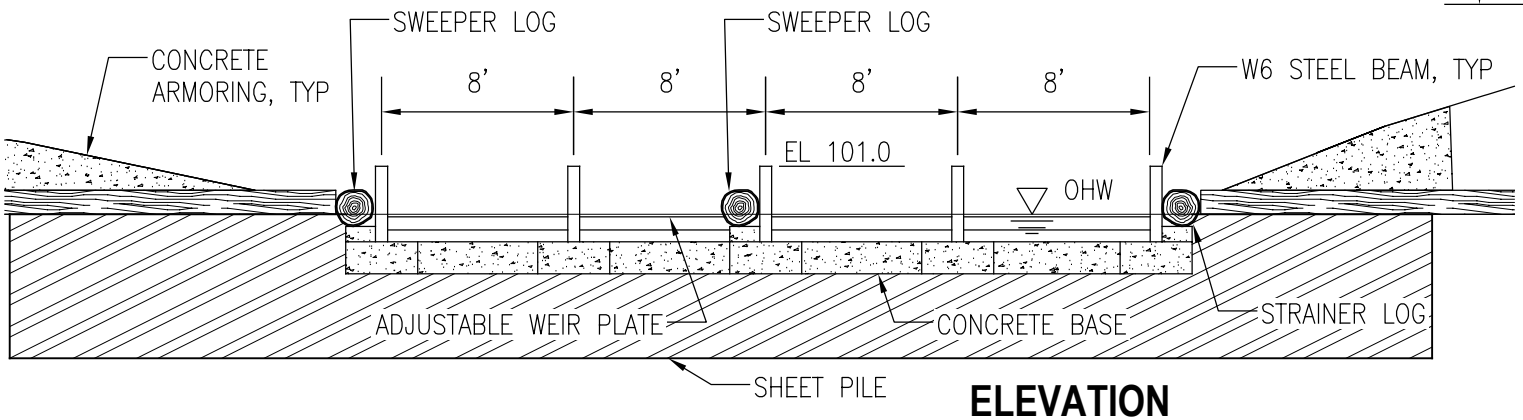

ELEVATION

SIDE CHANNEL OVERFLOW
SCALE: 1/8"=1'

PROJECT NAME: LOWER COAL CREEK OFF–LINE SEDIMENTATION POND	REFERENCE NO.: N/A	SITE LOCATION ADDRESS:	SIDE CHANNEL OVERFLOW DETAILS
PURPOSE: SEDIMENT REMOVAL	COUNTY OF: KING	4641 125TH AVE SE BELLEVUE, WA 98006	APPLICATION BY: CITY OF BELLEVUE
DATUM: NAVD 88	WATER BODY: COAL CREEK		DATE: SHEET 11 OF 32

APPENDIX B

JONES & STOKES WETLAND REPORT

This page intentionally left blank.

Technical Memorandum

Date:	April 23, 2008
To:	Zarrian Smith, City of Bellevue Parks and Community Services
From:	Torrey Luiting and David Johnson
cc:	Mark Matthies
Subject:	Wetland and Stream Delineation—McIntosh Parcels

Introduction

This technical memorandum describes a wetland and stream delineation conducted within the McIntosh parcels. The parcels (nos. 162405-9084 and 162405-9190) are adjacent to the City of Bellevue (City) Coal Creek Park, and are located at 4641 125th Avenue SE within the city limits, Section 16, Township 24N, Range 5E. Two wetlands and three streams were identified and delineated within the parcels.

The delineation methods, preliminary data collection, and descriptions of delineated wetlands and streams are presented below.

Methods

At the request of the City, ICF Jones & Stokes conducted a wetland delineation of the McIntosh parcels on February 6, 2008. Pink flagging was tied to vegetation to indicate the edge of the wetland and to indicate the location of sample plots. Flags were numbered in sequence along the wetland edge (.e.g., W1-1, W1-2). The City then surveyed the wetland edge.

Wetlands

Delineation methods were based on the U.S. Army Corps of Engineers (Corps) *Wetland Delineation Manual* (Environmental Laboratory 1987) and the Washington State Department of Ecology (Ecology) *Washington State Wetlands Identification and Delineation Manual* (Ecology 1997). Both manuals require the presence of wetland indicators for hydrophytic vegetation, hydrology, and hydric soils before an area is considered a wetland.

Wetland Vegetation

Under normal conditions, hydrophytic vegetation is considered prevalent if greater than 50% of the dominant species from each stratum—tree, shrub, vine, and herbaceous—are classified as obligate wetland (OBL), facultative wet wetland (FACW), and/or facultative wetland (FAC), according to the U.S. Fish and Wildlife Service (USFWS) publication *National List of Plant Species that Occur in Wetlands* (Reed 1988). These classifications are based on moisture tolerance, as indicated in Table 1.

Table 1. Plant Species Indicator Category Definitions

Category	Definition
Obligate (OBL) Wetland	Plants that almost always occur in wetlands (estimated probability > 99%) under natural conditions.
Facultative Wet (FACW) Wetland	Plants that usually occur in wetlands (estimated probability 67–99%) but are occasionally found in nonwetland areas.
Facultative (FAC) Wetland	Plants that are equally likely to occur in wetlands or nonwetland areas (estimated probability 33–67%).
Facultative Upland (FACU)	Plants that usually occur in nonwetland areas (estimated probability 67–99%).
Upland (UPL)	Plants that almost always occur in nonwetland areas (estimated probability > 99%) under natural conditions.

Source: Reed 1988

Wetland Soils

Hydric soils are defined as soils that are saturated, flooded, or ponded for sufficient duration during the growing season to develop anaerobic (i.e., reducing) conditions in the upper horizons, which favor the growth and regeneration of hydrophytic vegetation (Environmental Laboratory 1987). Hydric soils were identified in the field by examining the upper soil profile for hydric soil indicators.

Wetland Hydrology

Wetland hydrology is defined as soil inundation or saturation for sufficient duration to develop hydric soils that support vegetation typically adapted for life in periodically anaerobic soil conditions (Environmental Laboratory 1987). Primary indicators of wetland hydrology include inundation (i.e., standing water), saturation in the upper 12 inches of the soil column, water marks or lines on adjacent stationary objects (e.g., trees), sediment deposits or drift lines on vegetation, and observable drainage patterns on the ground surface. Two or more secondary indicators from the following list can also be used: water-stained leaves, oxidized rhizospheres in the upper 12 inches of the soil column, and information from the local soil survey (Environmental Laboratory 1987).

Wetland Classification and Buffers

Wetland vegetation types were assigned on the basis of the USFWS wetland classification system (Cowardin et al. 1979). This system categorizes wetlands according to plant community types and is one of many factors commonly used by local jurisdictions to help determine wetland functions and values. The hydrogeomorphic (HGM) class of each wetland was determined by using Ecology's *Washington State Wetland Rating System for Western Washington* (Hruby 2004). Wetland ratings also were based on this publication, which the City of Bellevue has adopted to categorize wetlands and define buffers (City of Bellevue Code 20.25H.095).

Streams

Stream identification was based on the Washington State Administrative Code (WAC) definition of ordinary high water mark (OHWM), which is used as the standard for stream determination. WAC 173.22.30(11) defines the OHWM on all lakes, streams, and tidal water as "that mark that will be found by examining the bed and banks and ascertaining where the presence and action of waters are so common and usual, and so long continued in all ordinary years, as to mark upon the soil a character distinct from that of the abutting upland."

White flagging was tied to vegetation to indicate the OHWM of streams. Flags were numbered in sequence along the OWHM (e.g., OWHM-1, OHWM-2). For narrow streams (less than 1 foot in width), the centerline was flagged. The City surveyed of the OHWM.

Stream classification was determined using the City's classification system (City of Bellevue Code 20.25H.075), which includes Type S (Shoreline of the State), Type F (fish bearing or fish habitat), Type N (neither Type S nor F), and Type O (neither Type S, F, nor N, and not physically connected to other waters).

Jurisdictional Determinations

This technical memorandum documents the best professional judgment and conclusions of ICF Jones & Stokes wetland biologists based on a single day's delineation effort. It documents our findings regarding the occurrence; delineated extent; category; and likely buffer for wetlands, streams, and potentially jurisdictional ditches. Ultimately, the determination of jurisdictional wetland boundaries, as well as the regulation of streams and ditches, and associated federal and state permitting requirements are determined by the Corps, Seattle District, Regulatory Branch , with any proposed impacts regulated by the Corps, Ecology, and City Department of Planning and Community Development (DPCD).

Summary of Site Conditions

The project lies within the Western Hemlock Zone (Franklin and Dyrness 1988), a vegetative complex that occupies extensive lowlands and foothills of western Washington. Plant communities not altered by logging or other disturbance normally consist of western hemlock (*Tsuga heterophylla*), Douglas-fir (*Pseudotsuga menziesii*), and western redcedar (*Thuja plicata*),

with an understory of western swordfern (*Polystichum munitum*), vine maple (*Acer circinatum*), and salmonberry (*Rubus spectabilis*). Within this vegetative zone, riparian and wetland plant communities tend to be dominated by red alder (*Alnus rubra*), black cottonwood (*Populus balsamifera* ssp. *trichocarpa*), and salmonberry.

The McIntosh parcels are similar in vegetative conditions to the adjacent Coal Creek Park. Most of the area in each parcel has not been developed and remains in a natural condition that consists of upland coniferous forest and wetland. There are some areas around a small house on 125th Avenue with refuse strewn about and weeding invasives taking hold.

All surface drainage on the McIntosh parcels eventually discharges to Coal Creek, which drains to Lake Washington. The parcels are within the Cedar River subwatershed (USGS HUC 171100120302) of the Cedar-Sammamish Watershed, defined as Water Resource Inventory Area (WRIA) No. 8.

Preliminary Data Collection

Potential wetlands were identified prior to the delineation using the *Soil Survey of King County, Washington* (SCS 1973), the U.S. Geological Survey (USGS) 7.5 minute series Bellevue South, Washington quadrangle topographic maps (USGS 1983), and the associated USFWS National Wetlands Inventory (NWI) map (USFWS 2008).

Soil Survey

Review of the soil survey indicated the following two soil series in the delineation area:

- Alderwood and Kitsap soils, very steep
- Norma sandy loam

Of the two soils, Norma sandy loam is considered hydric by the Natural Resources Conservation Service (NRCS 2001). The Norma series encompasses the northern portion of the parcel number 162405-9084 (Figure 1).

National Wetland Inventory

The USFWS NWI maps (USFWS 2008) does not identify any wetlands on the McIntosh parcels.

USGS Topography Maps

The USGS topographic map (USGS 1983) indicates mostly forested areas for both parcels. There is a small area of development at the end of 125th Avenue that consists of a road and a house. Coal Creek is the only aquatic feature indicated. The elevation range of the delineation area is approximately 25 feet to 55 feet National Geodetic Vertical Datum (NGVD).

Results

Jones & Stokes delineated two wetlands and three streams in the McIntosh parcels (Figure 1). The surveyed boundaries of the wetlands and streams were received from PACE Engineering on April 7, 2008.

Wetland 1

Wetland 1 is located to the south and west of where Coal Creek crosses the parcels (Figure 1). A total of approximately 0.73 acre (31,900 square feet) of Wetland 1 occurs within the McIntosh parcels; Wetland 1 extends to the southwest beyond the boundary of both parcels (Figure 1). Using Ecology's HGM classification system, the wetland would be considered a slope wetland, because water flow is unidirectional and the gradient is steep enough that water is not impounded. Using the Cowardin classification system, Wetland 1 would be considered as a palustrine forested/scrub-shrub, deciduous (PFO1/SS1) wetland (Attachment A, Corps Forms).

Wetland 1 meets Ecology's definition of a Category III wetland (Attachment B, Ecology Rating Forms). The wetland boundary is primarily based on changes in topography, hydrology, and soils. The City requires that Category III wetlands with habitat scores ranging between 20 and 28 points receive a 110-foot buffer and compensatory mitigation at a ratio of 2 to 1 for unavoidable impacts.

Vegetation

Wetland 1 is dominated by red alder (FAC) and a shrub understory of salmonberry (FAC+). Other non-dominate species observed throughout the wetland include devil's club (*Oplopanax horridus*, FAC+), vine maple (FAC-), piggy-back plant (*Tolmiea menziessi*, FAC), common horsetail (*Equisetum arvense*, FAC), water parsley (*Oenanthe sarmentosa*, OBL), red elderberry (*Sambucus racemosa*, FACU), swordfern (FACU), and western redcedar (FAC). The southwestern corner of the wetland (offsite) contains a scrub-shrub community dominated by salmonberry and piggy-back plant.

In three field sample plots, over 50% of the dominant vegetation had a wetland indicator status of FAC (Reed 1988) or wetter (Attachment A: sample plots W1-1, W1-4, and W1-6). This field indicator meets the Corps requirements for evidence of hydrophytic vegetation.

Soils

The soils of Wetland 1 are mapped as Alderwood and Kitsap soils, very steep (SCS 1973). This soil is not considered hydric (NRCS 2001).

Three wetland data plots had low chroma values of 1 with our without mottles to a depth of at least 10 inches (Appendix A: sample plots W1-1, W1-4, and W1-6). Soil textures consisted of silty loam, loam, gravelly silt loam, and gravelly loam. Soil matrix chroma values of 1 in the top 10 inches of the soil surface meet the Corps hydric soil criteria.

Hydrology

The hydrology of Wetland 1 is associated with seasonally high groundwater that seeps on the surface or moves subsurface down the slope toward Coal Creek. During the delineation, saturation to the surface was found in three data plots (Attachment A: sample plots W1-1, W1-4, and W1-6). Saturation in the top 12 inches of the surface meets the Corps requirements for evidence of wetland hydrology.

Wetland 2

Wetland 2 is located north of Coal Creek within parcel 162405-9190 (Figure 1). Wetland 2 is approximately 254 square feet in area. Using Ecology's HGM classification system, the wetland would be considered depressional because its elevations are lower than the surrounding landscape. Using the Cowardin classification system, Wetland 2 is would be considered a palustrine emergent, seasonally saturated (PEM) wetland (Attachment A).

Wetland 2 meets Ecology's definition of a Category IV wetland (Attachment B). It should be noted that Ecology's rating system is technically not sensitive enough to rate a wetland this small since the smallest wetland rated during the calibration was about 0.1 acre. However, Ecology still suggests rating small wetlands recognizing that the score will not be as "robust" as the score for larger wetlands. The wetland boundary is primarily based on changes in hydrology and soils.

The City generally does not regulate Category IV wetlands of less than 2,500 square feet. However, because Wetland 2 is located within the 100-foot buffer of Stream 2 (Coal Creek), as described below, and within the 110-foot buffer of Wetland 1, it would likely be considered a Critical Area. As such, any impacts to Wetland 2 would likely be regulated by the City and would require compensatory mitigation at a ratio of 1.5 to 1 for unavoidable impacts. Impacts adjacent to Wetland 2 should be coordinated with DPCD to determine if the wetland would receive its own buffer separate from that of Wetland 1 and Stream 2 (Coal Creek).

Vegetation

Wetland 2 is dominated by creeping buttercup (*Ranunculus repens*, FACW), common horsetail (*Equisetum arvense*, FAC), and unidentified grasses.

In one sample plot, over 50% of the dominant vegetation had a wetland indicator status of FAC (Reed 1988) or wetter (Attachment A: sample plot W2-1). This field indicator meets the Corps requirements for evidence of hydrophytic vegetation.

Soils

The soils of Wetland 2 are mapped as Norma sandy loam, which is considered hydric (SCS 1973, NRCS 2001). One wetland data plot had low chroma values of 1 with mottles to a depth of at least 10 inches (Attachment A: sample plot W2-1). Soil texture consisted of silty clay loam. Soil matrix chroma values of 1 in the top 10 inches of the soil surface meet the Corps hydric soil criteria.

Hydrology

The hydrology of Wetland 2 is associated with seasonally high groundwater. During the delineation, saturation to the surface as well as water in the pit 7 inches below the surface was found in one data plot (Attachment A: sample plot W2-1). Saturation in the top 12 inches of the surface meets the Corps requirements for evidence of wetland hydrology.

Adjacent Uplands

The forested uplands adjacent to Wetlands 1 and 2 are characterized by a largely deciduous canopy of red alder (FAC) and bigleaf maple (*Acer macrophyllum*, FACU) trees with an understory of salmonberry (FAC+), red elderberry (FACU), devil's club (FAC+) and swordfern (FACU). The uplands were distinguished from the wetland areas by their brighter soils, lack of hydrology, and vegetation community dominated by more upland associated species (Attachment A: upland sample plots 1-2, 1-3, 1-5, and 2-2).

Streams

Three streams were delineated in the study area (Figure 1).

Stream 1

Stream 1 discharges from an 18-inch corrugated metal culvert just outside of parcel 162405-9084. In general, the stream flows across the parcel in a northwest direction. Outside of the parcel the stream flows through small concrete culverts under 125th Avenue and residential driveways, and eventually discharges to Coal Creek. Stream 1 was flowing at the time of the delineation; however, the land owner indicated that the stream is dry most of the year. The average width of Stream 1 is approximately 6.2 feet. Stream substrate is dominated by gravel with some cobble, sand, and silt. Some large woody debris and overhanging vegetation on the banks is found along the stream in the upper reach near the culvert. The forested riparian area of Stream 1 is vegetated with bigleaf maple (FACU), swordfern (FACU), Douglas-fir (FACU), and western hemlock (FACU-).

Stream 1 meets the City's definition of a Type F stream because it contains fish habitat. Type F streams receive a 100-foot buffer.

Stream 2 (Coal Creek)

Coal Creek is a perennial stream that flows through both parcels in a generally northwesterly direction (Figure 1). It discharges into Lake Washington approximately 1.3 miles downstream. The average width of Coal Creek within the parcels is approximately 11.3 feet. Stream substrate is dominated by gravel and sand with some cobble and silt. Some large woody debris and overhanging vegetation on the banks is found along the stream. Sockeye, winter steelhead, and fall chinook use this portion of Coal Creek as a migration corridor (Streamnet 2008). Coho salmon use the area for spawning and rearing (Streamnet 2008). A review of Ecology's 303d

water quality listing indicates that Coal Creek is listed for fecal coliform and dissolved oxygen impairment within the parcels. The forested riparian area of Coal Creek in the parcels is dominated by red alder (FAC) and salmonberry (FAC+) associated with Wetland 1, and Himalayan blackberry (*Rubus armeniacus*, FACU) and English ivy (*Hedera helix*, UPL) on the banks near the residences along 125th Avenue.

Coal Creek meets the City's definition of a Type F stream since it contains fish and fish habitat. Type F streams receive a 100-foot buffer.

Stream 3

Stream 3 is a small, narrow seasonal stream that flows into Wetland 1 from the southwest near the southwestern corner of parcel 162405-9084 (Figure 1). Channel width is less than 1 foot and substrate consists of sand and silt. The bed and bank dissipate as the stream flows into Wetland 1. The channel is too small to provide any fish habitat, but it is connected to Coal Creek via seeps of Wetland 1.

Stream 3 meets the City's definition of a Type N stream, because it does not contain fish habitat but is connected to a Type F stream (Coal Creek) via Wetland 1. Type N streams receive a 50-foot buffer.

Regulatory Issues

Federal, state, and local regulations affect activities in wetlands and streams, as well as in their buffers. Agencies that have jurisdiction over activities in these water resources include, but may not be limited to: the Corps, Ecology, Washington Department of Fish and Wildlife (WDFW), and the City.

The Corps administers Section 404 of the Clean Water Act, which regulates the discharge of dredged or fill materials into waters of the U.S., including wetlands, streams, and ditches. For projects requiring Section 404 permits, the Corps makes the final determination as to whether the area meets the definition of a jurisdictional wetland or if a stream or ditch is within federal jurisdiction.

Two types of permits, individual and general, are issued by the Corps to authorize activities that would result in the discharge of dredge or fill material into waters of the U.S. Individual permits are required for specific activities that require compliance with the Corps' formal review process. General permits are issued for certain projects that will cause only minimal adverse environmental effects. Nationwide permits are a type of general permit that has a set of national and regional conditions that must be met before the permit can be issued. Permit notification requirements and regional conditions are dependent on the specific activity.

Section 401 of the Clean Water Act requires applicants for Section 404 permits to obtain Section 401 Water Quality Certification from the certifying agency. In Washington, that agency is Ecology. Section 401 certification ensures that projects discharging to waters of the U.S.,

including wetlands, meet state water quality standards. Conditions of the 401 certification become conditions of the Corps 404 permit. Project information should be submitted to Ecology, as well as to the Corps, for Section 404 and 401 verification and approval.

Section 404 and 401 permits require the submittal and approval of a Joint Aquatic Resources Permit Application (JARPA) to the above-mentioned agencies before activities can be initiated in the wetland identified. Depending on the activity proposed in the wetland, both a wetland delineation report and a wetland mitigation plan demonstrating compensation for unavoidable impacts on wetland and other waters of the U.S., are typically requested by the Corps, Ecology, and the local jurisdiction as part of the JARPA submittal. In addition, the Section 404 permitting process requires compliance with Section 7 of the Endangered Species Act (ESA) through the preparation of a biological assessment (BA), and with Section 106 of the National Historic Preservation Act (NHPA) through preparation of a cultural resources survey assessment.

Applicable WDFW regulations include a Hydraulic Permit Approval (HPA). This permit is required for any form of work that uses, diverts, obstructs, or changes the natural flow or bed of any fresh water or saltwater of the state. Permit processing can take up to 45 days following receipt of a complete JARPA, and the local jurisdiction's State Environmental Policy Act (SEPA) determination has to be completed before an HPA will be issued by WDFW.

Applicable City regulations include Part 20.25H Critical Areas Overlay District of the City code. Critical areas review, including a Critical Areas Report, is required for any activities that can impair the functions and values of wetlands and streams (and their associated wildlife habitat) or their buffers, unless exempted. Impacts to wetlands and streams or their buffers require compensatory mitigation.

Literature Cited

Cowardin, L.M., V. Carter, F.C. Golet, and E.T. LaRoe. 1979. *Classification of Wetlands and Deepwater Habitats of the United States*. U.S. Fish and Wildlife Service PUBL. FWS/OBS-79/31. 103p.

Ecology (Washington State Department of Ecology). 1997. *Washington State Wetlands Identification and Delineation Manual*. Washington State Department of Ecology Publication #96-94. Olympia, WA.

Environmental Laboratory. 1987. *U.S. Army Corps of Engineers Wetland Delineation Manual. Technical Report Y-87-1*. U.S. Army Waterways Experiment Station. Vicksburg, MS.

Franklin, Jerry F. and CT Dyrness. 1988. *Natural Vegetation of Oregon and Washington*. Corvallis, OR: Oregon State University Press.

Hruby, T. 2004. *Washington State Wetlands Rating System for Western Washington*. Washington State Department of Ecology. Olympia, WA.

NRCS (Natural Resources Conservation Service). 2001. Hydric Soils of King County, WA. Available: <http://www.wa.nrcs.usda.gov/technical/soils/hydric_lists/>.

Reed, P.B., Jr. 1988. *National List of Plant Species that Occur in Wetlands (Northwest Region 9)*. USDI Fish and Wildlife Service Biological Report 88 (26.9). 89 pp.

SCS (Soil Conservation Service). 1973. *Soil Survey of King County, Washington*. U.S. Department of Agriculture.

USFWS (U.S. Fish and Wildlife Service). 2008. National Wetlands Inventory website. U.S. Department of the Interior, Fish and Wildlife Service, St. Petersburg, FL. Available: <http://www.fws.gov/nwi/>. Accessed: February 5, 2008.

USGS (U.S. Geological Survey). 1983. 7.5' Series (Topographic)—Bellevue South, Washington Quadrangle.

Figure 1
Existing Conditions

McIntosh Property
Wetland Survey
City of Bellevue
Parks & Community Services

SAMPLE PLOT

PARCEL

UPLAND

WETLAND

STREAM

0 40 80

Scale: 1" = 80'

Source: PACE (2008)

ICF Jones & Stokes
an ICF International Company

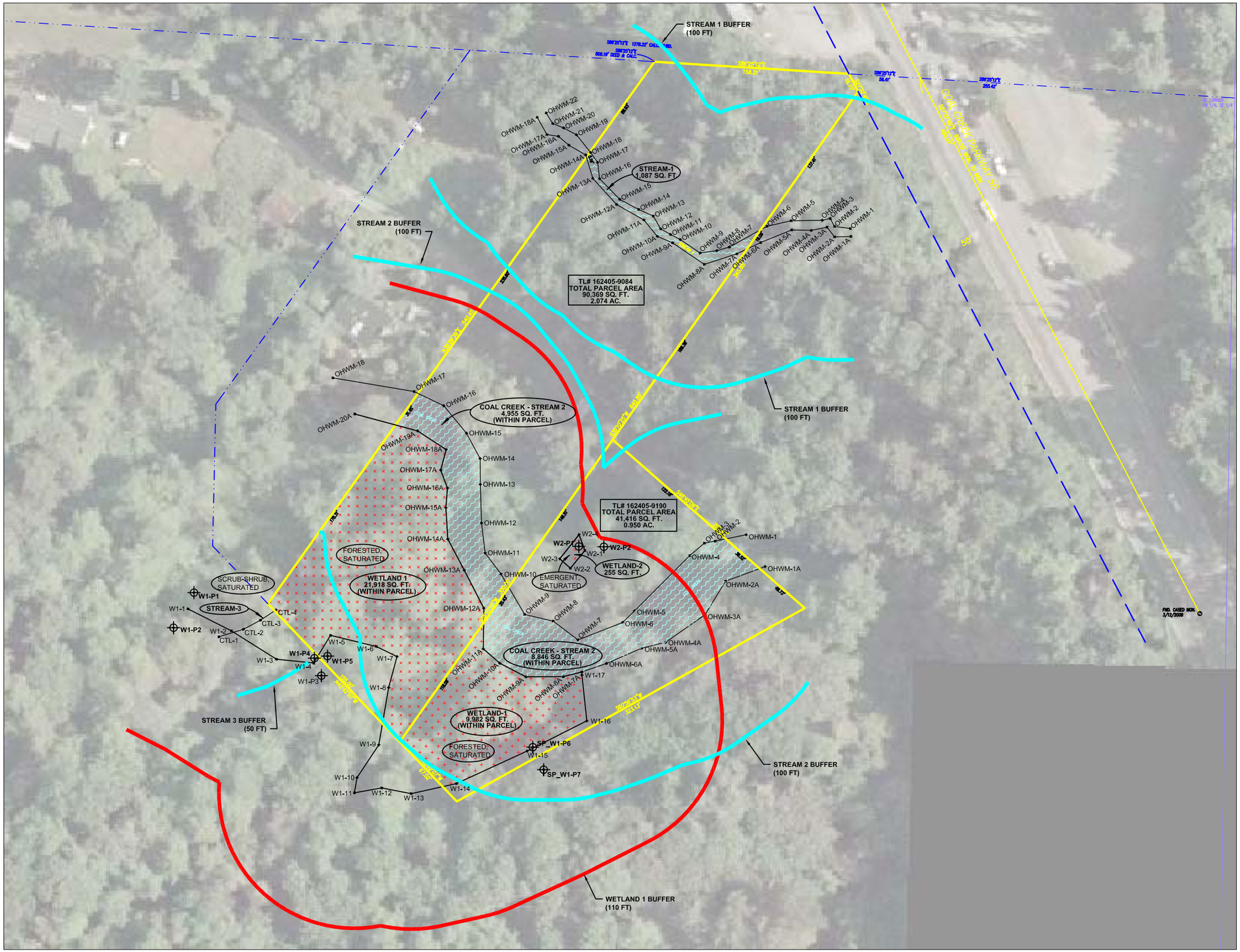

Figure 1
Existing Conditions

McIntosh Property
Wetland Survey
City of Bellevue
Parks & Community Services

Parcel 162405-9084	
Stream	6,043 sq ft
Wetland	21,918 sq ft
Stream and Wetland Buffer	54,300 sq ft
Other Upland	8,108 sq ft
Total	**90,369 sq ft**

Parcel 162405-9190	
Stream	8,846 sq ft
Wetland	10,237 sq ft
Stream and Wetland Buffer	22,152 sq ft
Other Upland	181 sq ft
Total	**41,416 sq ft**

SAMPLE PLOT

PARCEL

UPLAND

WETLAND

STREAM

0 40 80
Scale: 1" = 80'

Source: PACE (2008)

ICF Jones & Stokes
an ICF International Company

Attachment A

Corps Forms

DATA FORM
ROUTINE WETLAND DETERMINATION
(1987 COE Wetlands Delineation Manual)

Project/Site: McIntosh Properties Applicant/Owner: City of Bellevue Investigator: DCJ, BK	Date: 2-6-08 County: KING State: WA
Do Normal Circumstances exist on the site? **Yes** No Is the site significantly disturbed (Atypical Situation)? Yes **No** Is the area a potential Problem Area? Yes **No** (If needed, explain on reverse.)	Community ID: PSS Transect ID: W1 Plot ID: P1

VEGETATION

Dominant Plant Species	Stratum	Indicator	Dominant Plant Species	Stratum	Indicator
*1. Rubus spectabilis 100	S	FAC+	9.		
*2. Tolmiea menziesii 20	H	FAC	10.		
3.			11.		
4.			12.		
5.			13.		
6.			14.		
7.			15.		
8.			16.		

Percent of Dominant Species that are OBL, FACW or FAC (excluding FAC-). 2:2 = 100%

Remarks: PSS pocket w/in PFO, this portion of wetland is offsite

HYDROLOGY

X Recorded Data (Describe in Remarks): ___ Stream, Lake, or Tide Gauge X Aerial Photographs ___ Other X No Recorded Data Available	Wetland Hydrology Indicators: Primary Indicators: ___ Inundated X Saturated in Upper 12 Inches ___ Water Marks ___ Drift Lines ___ Sediment Deposits ___ Drainage Patterns in Wetlands Secondary Indicators (2 or more required): ___ Oxidized Root Channels in Upper 12 Inches ___ Water-Stained Leaves ___ Local Soil Survey Data ___ FAC-Neutral Test ___ Other (Explain in Remarks)
Field Observations: Depth of Surface Water: — (in.) Depth to Free Water in Pit: — (in.) Depth to Saturated Soil: Surface (in.)	

Remarks:

SOILS

Map Unit Name (Series and Phase): Alderwood and Kitsap Soils, very steep

Drainage Class: MWD

Taxonomy (Subgroup): Vitrandic/Aquandic Dystroxerepts

Field Observations Confirm Mapped Type? Yes (No)

Profile Description:

Depth (inches)	Horizon	Matrix Color (Munsell Moist)	Mottle Colors (Munsell Moist)	Mottle Abundance/ Size/Contrast	Texture, Concretions, Structure, etc.
0-14		10YR 2/1			Gravelly Silt loam
14-16		10YR 4/1	10YR 3/6	Many, Med., dist.	Gravelly Silt loam

Hydric Soil Indicators:

- ___ Histosol
- ___ Histic Epipedon
- ___ Sulfidic Odor
- ___ Aquic Moisture Regime
- X Reducing Conditions
- X Gleyed or Low-Chroma Colors
- ___ Concretions
- ___ High Organic Content in Surface Layer in Sandy Soils
- ___ Organic Streaking in Sandy Soils
- ___ Listed on Local Hydric Soils List
- ___ Listed on National Hydric Soils List
- ___ Other (Explain in Remarks)

Remarks:

WETLAND DETERMINATION

Hydrophytic Vegetation Present?	(Yes) No	(Circle)
Wetland Hydrology Present?	(Yes) No	
Hydric Soils Present?	(Yes) No	

(Circle)

Is this Sampling Point Within a Wetland? (Yes) No

Remarks: Slope/seep wetland with northeast aspect toward Coal Creek.

PSS portion is offsite.

Approved by HQUSACE 3/92

DATA FORM
ROUTINE WETLAND DETERMINATION
(1987 COE Wetlands Delineation Manual)

Project/Site: McIntosh Properties Applicant/Owner: City of Bellevue Investigator: DCJ, BK	Date: 2-6-08 County: KING State: WA
Do Normal Circumstances exist on the site? **Yes** No Is the site significantly disturbed (Atypical Situation)? Yes **No** Is the area a potential Problem Area? Yes **No** (If needed, explain on reverse.)	Community ID: UPL Transect ID: W1 Plot ID: PZ

VEGETATION

Dominant Plant Species	Stratum	Indicator	Dominant Plant Species	Stratum	Indicator
*1. Sambucus racemosa 25	S	FACU	9.		
*2. Rubus spectabilis 65	S	FAC+	10.		
3. Oplopanax horridus 5	S	FAC+	11.		
4. Polystichum munitum 5	H	FACU	12.		
5. Carex deweyana 5	H	FACU	13.		
6. Tolmiea menziesii 10	H	FAC	14.		
*7. Acer macrophyllum 20	T	FACU	15.		
8.			16.		

Percent of Dominant Species that are OBL, FACW or FAC (excluding FAC-). 1:3 = 33%

Remarks: upland forest w/ shrub understory.

HYDROLOGY

X Recorded Data (Describe in Remarks):
___ Stream, Lake, or Tide Gauge
X Aerial Photographs
___ Other
X No Recorded Data Available

Field Observations:

Depth of Surface Water: _____(in.)

Depth to Free Water in Pit: _____(in.)

Depth to Saturated Soil: _____(in.)

Wetland Hydrology Indicators:
Primary Indicators:
___ Inundated
___ Saturated in Upper 12 Inches
___ Water Marks
___ Drift Lines
___ Sediment Deposits
___ Drainage Patterns in Wetlands
Secondary Indicators (2 or more required):
___ Oxidized Root Channels in Upper 12 Inches
___ Water-Stained Leaves
___ Local Soil Survey Data
___ FAC-Neutral Test
___ Other (Explain in Remarks)

Remarks: No hydrology indicators.

SOILS

Map Unit Name (Series and Phase): Alderwood and Kitsap soils, very steep

Drainage Class: MWD

Taxonomy (Subgroup): Vitrandic/Aquandic Dystroxerepts

Field Observations Confirm Mapped Type? Yes (No)

Profile Description:

Depth (inches)	Horizon	Matrix Color (Munsell Moist)	Mottle Colors (Munsell Moist)	Mottle Abundance/ Size/Contrast	Texture, Concretions, Structure, etc.
0-14		10YR 3/2			loam
14-16		5Y 4/3			loam

Hydric Soil Indicators:

- ___ Histosol
- ___ Histic Epipedon
- ___ Sulfidic Odor
- ___ Aquic Moisture Regime
- ___ Reducing Conditions
- ___ Gleyed or Low-Chroma Colors
- ___ Concretions
- ___ High Organic Content in Surface Layer in Sandy Soils
- ___ Organic Streaking in Sandy Soils
- ___ Listed on Local Hydric Soils List
- ___ Listed on National Hydric Soils List
- ___ Other (Explain in Remarks)

Remarks: No hydric soil indicators.

WETLAND DETERMINATION

Hydrophytic Vegetation Present?	Yes (No) (Circle)	
Wetland Hydrology Present?	Yes (No)	
Hydric Soils Present?	Yes (No)	
		(Circle)
Is this Sampling Point Within a Wetland?		Yes (No)

Remarks: Upland forest on steep slope.

Approved by HQUSACE 3/92

DATA FORM
ROUTINE WETLAND DETERMINATION
(1987 COE Wetlands Delineation Manual)

Project/Site: McIntosh Properties Applicant/Owner: City of Bellevue Investigator: DCJ, BK	Date: 2-6-08 County: KING State: WA
Do Normal Circumstances exist on the site? **Yes** No Is the site significantly disturbed (Atypical Situation)? Yes **No** Is the area a potential Problem Area? Yes **No** (If needed, explain on reverse.)	Community ID: UPL Transect ID: W1 Plot ID: P3

VEGETATION

Dominant Plant Species	Stratum	Indicator	Dominant Plant Species	Stratum	Indicator
*1. Rubus spectabilis 90	S	FAC+	9.		
*2. Alnus rubra 80	T	FAC	10.		
3.			11.		
4.			12.		
5.			13.		
6.			14.		
7.			15.		
8.			16.		

Percent of Dominant Species that are OBL, FACW or FAC (excluding FAC-). 2:2 = 100%

Remarks:

HYDROLOGY

X Recorded Data (Describe in Remarks): ___ Stream, Lake, or Tide Gauge X Aerial Photographs ___ Other X No Recorded Data Available	Wetland Hydrology Indicators: Primary Indicators: ___ Inundated ___ Saturated in Upper 12 Inches ___ Water Marks ___ Drift Lines ___ Sediment Deposits ___ Drainage Patterns in Wetlands Secondary Indicators (2 or more required): ___ Oxidized Root Channels in Upper 12 Inches ___ Water-Stained Leaves ___ Local Soil Survey Data ___ FAC-Neutral Test ___ Other (Explain in Remarks)
Field Observations: Depth of Surface Water: _____(in.) Depth to Free Water in Pit: _____(in.) Depth to Saturated Soil: _____(in.)	

Remarks: No hydrology indicators. Soils very dry for February.

SOILS

Map Unit Name (Series and Phase): Alderwood and Kitsap, very steep

Drainage Class: MWD

Field Observations Confirm Mapped Type? Yes (No)

Taxonomy (Subgroup): Vitrandic/Aquandic Dystoxerepts

Profile Description:

Depth (inches)	Horizon	Matrix Color (Munsell Moist)	Mottle Colors (Munsell Moist)	Mottle Abundance/ Size/Contrast	Texture, Concretions, Structure, etc.
0-4		10YR 2/2			loam
4-12		10YR 3/2			Silty loam
12-16		2.5Y 5/2	2.5Y 4/4	Many, med, dist	Silty loam

Hydric Soil Indicators:

- ___ Histosol
- ___ Histic Epipedon
- ___ Sulfidic Odor
- ___ Aquic Moisture Regime
- ___ Reducing Conditions
- ___ Gleyed or Low-Chroma Colors
- ___ Concretions
- ___ High Organic Content in Surface Layer in Sandy Soils
- ___ Organic Streaking in Sandy Soils
- ___ Listed on Local Hydric Soils List
- ___ Listed on National Hydric Soils List
- ___ Other (Explain in Remarks)

Remarks: No hydric soil indicators.

WETLAND DETERMINATION

Hydrophytic Vegetation Present?	(Yes) No (Circle)	
Wetland Hydrology Present?	Yes (No)	
Hydric Soils Present?	Yes (No)	
Is this Sampling Point Within a Wetland?		(Circle) Yes (No)

Remarks: Upland forest ~~in~~ on steep slope. Hydric soil and hydrology criteria not met.

Approved by HQUSACE 3/92

DATA FORM
ROUTINE WETLAND DETERMINATION
(1987 COE Wetlands Delineation Manual)

Project/Site: McIntosh Properties Applicant/Owner: City of Bellevue Investigator: DCJ, BK	Date: 2-6-08 County: KING State: WA
Do Normal Circumstances exist on the site? (Yes) No Is the site significantly disturbed (Atypical Situation)? Yes (No) Is the area a potential Problem Area? Yes (No) (If needed, explain on reverse.)	Community ID: PFO Transect ID: W Plot ID: P4

VEGETATION

Dominant Plant Species	Stratum	Indicator	Dominant Plant Species	Stratum	Indicator
*1. Rubus spectabilis 40	S	FAC+	9.		
2. Oplopanax horridus 5	S	FAC+	10.		
3. Sambucus racemosa 5	S	FACU	11.		
*4. Alnus rubra 20	T	FAC	12.		
5.			13.		
6.			14.		
7.			15.		
8.			16.		

Percent of Dominant Species that are OBL, FACW or FAC (excluding FAC-). 2:2 = 100%

Remarks: Forested wetland w/ shrub understory.

HYDROLOGY

✓ Recorded Data (Describe in Remarks): ___ Stream, Lake, or Tide Gauge ✓ Aerial Photographs ___ Other ✓ No Recorded Data Available	Wetland Hydrology Indicators: Primary Indicators: ___ Inundated X Saturated in Upper 12 Inches ___ Water Marks ___ Drift Lines ___ Sediment Deposits ___ Drainage Patterns in Wetlands Secondary Indicators (2 or more required): ___ Oxidized Root Channels in Upper 12 Inches ___ Water-Stained Leaves ___ Local Soil Survey Data ___ FAC-Neutral Test ___ Other (Explain in Remarks)
Field Observations: Depth of Surface Water: – (in.) Depth to Free Water in Pit: – (in.) Depth to Saturated Soil: Surface (in.)	

Remarks: Slope/seep toward Coal Creek.

SOILS

Map Unit Name (Series and Phase): Alderwood and Kitsap soils, very steep

Drainage Class: MWD

Field Observations Confirm Mapped Type? Yes (No)

Taxonomy (Subgroup): Vitrandic/Aquandic Dystroxerepts

Profile Description:

Depth (inches)	Horizon	Matrix Color (Munsell Moist)	Mottle Colors (Munsell Moist)	Mottle Abundance/ Size/Contrast	Texture, Concretions, Structure, etc.
0-14		10YR 2/1			Silt loam
14-16		10YR 5/1	10YR 4/6	many, med., dist	loam

Hydric Soil Indicators:

- ___ Histosol
- ___ Histic Epipedon
- ___ Sulfidic Odor
- ___ Aquic Moisture Regime
- X Reducing Conditions
- X Gleyed or Low-Chroma Colors
- ___ Concretions
- ___ High Organic Content in Surface Layer in Sandy Soils
- ___ Organic Streaking in Sandy Soils
- ___ Listed on Local Hydric Soils List
- ___ Listed on National Hydric Soils List
- ___ Other (Explain in Remarks)

Remarks:

WETLAND DETERMINATION

Hydrophytic Vegetation Present?	(Yes) No	(Circle)
Wetland Hydrology Present?	(Yes) No	
Hydric Soils Present?	(Yes) No	

(Circle)

Is this Sampling Point Within a Wetland? (Yes) No

Remarks: Slope/steep wetland. Aspect toward Coal Creek.

Approved by HQUSACE 3/92

DATA FORM
ROUTINE WETLAND DETERMINATION
(1987 COE Wetlands Delineation Manual)

Project/Site: McIntosh Properties Applicant/Owner: City of Bellevue Investigator: DCT, BK	Date: 2-6-08 County: KING State: WA
Do Normal Circumstances exist on the site? **Yes** No Is the site significantly disturbed (Atypical Situation)? Yes **No** Is the area a potential Problem Area? Yes **No** (If needed, explain on reverse.)	Community ID: UPL Transect ID: W1 Plot ID: P5

VEGETATION

Dominant Plant Species	Stratum	Indicator	Dominant Plant Species	Stratum	Indicator
A 1. Rubus spectabilis 90	S	FAC+	9.		
2. Oplopanax horridus 5	S	FAC+	10.		
3. Sambucus racemosa 5	S	FACU	11.		
A 4. Alnus rubra 20	T	FAC	12.		
5.			13.		
6.			14.		
7.			15.		
8.			16.		

Percent of Dominant Species that are OBL, FACW or FAC (excluding FAC-). 2/2 = 100%

Remarks: Upland forest.

HYDROLOGY

X Recorded Data (Describe in Remarks):
- ___ Stream, Lake, or Tide Gauge
- X Aerial Photographs
- ___ Other

X No Recorded Data Available

Field Observations:

Depth of Surface Water: _____(in.)

Depth to Free Water in Pit: _____(in.)

Depth to Saturated Soil: _____(in.)

Wetland Hydrology Indicators:

Primary Indicators:
- ___ Inundated
- ___ Saturated in Upper 12 Inches
- ___ Water Marks
- ___ Drift Lines
- ___ Sediment Deposits
- ___ Drainage Patterns in Wetlands

Secondary Indicators (2 or more required):
- ___ Oxidized Root Channels in Upper 12 Inches
- ___ Water-Stained Leaves
- ___ Local Soil Survey Data
- ___ FAC-Neutral Test
- ___ Other (Explain in Remarks)

Remarks: No hydrology indicators despite being the wettest time of the year. Soil completely dry.

SOILS

Map Unit Name (Series and Phase): Aldenwood + Kitsap soils, very deep

Drainage Class: MWD

Taxonomy (Subgroup): Vitrandic/Aquandic Dystroxerepts

Field Observations Confirm Mapped Type? Yes (No)

Profile Description:

Depth (inches)	Horizon	Matrix Color (Munsell Moist)	Mottle Colors (Munsell Moist)	Mottle Abundance/ Size/Contrast	Texture, Concretions, Structure, etc.
0-12		10YR 2/1			loam
12-16		10YR 3/3			loam

Hydric Soil Indicators:

- ___ Histosol
- ___ Histic Epipedon
- ___ Sulfidic Odor
- ___ Aquic Moisture Regime
- ___ Reducing Conditions
- X Gleyed or Low-Chroma Colors
- ___ Concretions
- ___ High Organic Content in Surface Layer in Sandy Soils
- ___ Organic Streaking in Sandy Soils
- ___ Listed on Local Hydric Soils List
- ___ Listed on National Hydric Soils List
- ___ Other (Explain in Remarks)

Remarks:

WETLAND DETERMINATION

Hydrophytic Vegetation Present?	(Yes) No (Circle)	
Wetland Hydrology Present?	Yes (No)	
Hydric Soils Present?	(Yes) No	
Is this Sampling Point Within a Wetland?		(Circle) Yes (No)

Remarks: Veg. criteria and hydric soil criteria met. However, no hydrology indicators. PH is very similar, but hydrology is present. PH is very close to P5.

Approved by HQUSACE 3/92

DATA FORM
ROUTINE WETLAND DETERMINATION
(1987 COE Wetlands Delineation Manual)

Project/Site: McIntosh Properties Applicant/Owner: City of Bellevue Investigator: DCJ, BK	Date: 2-6-08 County: KING State: WA
Do Normal Circumstances exist on the site? **Yes** No Is the site significantly disturbed (Atypical Situation)? Yes **No** Is the area a potential Problem Area? Yes **No** (If needed, explain on reverse.)	Community ID: PFO Transect ID: W1 Plot ID: P6

VEGETATION

Dominant Plant Species	Stratum	Indicator	Dominant Plant Species	Stratum	Indicator
*1. Rubus spectabilis 40	S	FAC+	9.		
*2. Alnus rubra 40	T	FAC	10.		
3.			11.		
4.			12.		
5.			13.		
6.			14.		
7.			15.		
8.			16.		

Percent of Dominant Species that are OBL, FACW or FAC (excluding FAC-). 2:2 = 100%

Remarks:

HYDROLOGY

X Recorded Data (Describe in Remarks):
___ Stream, Lake, or Tide Gauge
X Aerial Photographs
___ Other
X No Recorded Data Available

Field Observations:

Depth of Surface Water: _____(in.)

Depth to Free Water in Pit: _____(in.)

Depth to Saturated Soil: Surface (in.)

Wetland Hydrology Indicators:
Primary Indicators:
___ Inundated
X Saturated in Upper 12 Inches
___ Water Marks
___ Drift Lines
___ Sediment Deposits
___ Drainage Patterns in Wetlands
Secondary Indicators (2 or more required):
___ Oxidized Root Channels in Upper 12 Inches
___ Water-Stained Leaves
___ Local Soil Survey Data
___ FAC-Neutral Test
___ Other (Explain in Remarks)

Remarks: Slope/seep toward Coal Creek.

SOILS

Map Unit Name (Series and Phase): Alderwood + Kitsap Soils, very deep

Drainage Class: MWD

Field Observations Confirm Mapped Type? Yes (No)

Taxonomy (Subgroup): Vitrandic/Aquandic Dystroxerepts

Profile Description:

Depth (inches)	Horizon	Matrix Color (Munsell Moist)	Mottle Colors (Munsell Moist)	Mottle Abundance/ Size/Contrast	Texture, Concretions, Structure, etc.
0-16		10YR 2/1	10YR 3/4	few, faint, fine	gravelly loam

Hydric Soil Indicators:

- ___ Histosol
- ___ Histic Epipedon
- ___ Sulfidic Odor
- ___ Aquic Moisture Regime
- X Reducing Conditions
- X Gleyed or Low-Chroma Colors
- ___ Concretions
- ___ High Organic Content in Surface Layer in Sandy Soils
- ___ Organic Streaking in Sandy Soils
- ___ Listed on Local Hydric Soils List
- ___ Listed on National Hydric Soils List
- ___ Other (Explain in Remarks)

Remarks:

WETLAND DETERMINATION

Hydrophytic Vegetation Present?	(Yes) No	(Circle)
Wetland Hydrology Present?	(Yes) No	
Hydric Soils Present?	(Yes) No	
Is this Sampling Point Within a Wetland?	(Yes) No	(Circle)

Remarks: Slope/Seep PFO wetland w/ aspect toward Coal Creek.

Approved by HQUSACE 3/92

DATA FORM
ROUTINE WETLAND DETERMINATION
(1987 COE Wetlands Delineation Manual)

Project/Site: McIntosh Properties Applicant/Owner: City of Bellevue Investigator: DCJ, BK	Date: 2-6-08 County: KING State: WA
Do Normal Circumstances exist on the site? **Yes** No Is the site significantly disturbed (Atypical Situation)? Yes **No** Is the area a potential Problem Area? Yes **No** (If needed, explain on reverse.)	Community ID: UPL Transect ID: W1 Plot ID: P7

VEGETATION

Dominant Plant Species	Stratum	Indicator	Dominant Plant Species	Stratum	Indicator
1. Polystichum munitum 30	H	FACU	9.		
2. Rubus spectabilis 40	S	FAC+	10.		
3. Sambucus racemosa 20	S	FACU	11.		
4.			12.		
5.			13.		
6.			14.		
7.			15.		
8.			16.		

Percent of Dominant Species that are OBL, FACW or FAC (excluding FAC-). 1:3 = 33%

Remarks:

HYDROLOGY

X Recorded Data (Describe in Remarks):
___ Stream, Lake, or Tide Gauge
X Aerial Photographs
___ Other
X No Recorded Data Available

Field Observations:

Depth of Surface Water: _____(in.)

Depth to Free Water in Pit: _____(in.)

Depth to Saturated Soil: _____(in.)

Wetland Hydrology Indicators:
Primary Indicators:
___ Inundated
___ Saturated in Upper 12 Inches
___ Water Marks
___ Drift Lines
___ Sediment Deposits
___ Drainage Patterns in Wetlands
Secondary Indicators (2 or more required):
___ Oxidized Root Channels in Upper 12 Inches
___ Water-Stained Leaves
___ Local Soil Survey Data
___ FAC-Neutral Test
___ Other (Explain in Remarks)

Remarks: No hydrology Indicators.

SOILS

Map Unit Name (Series and Phase): Alderwood + Kitsap Soils, very steep

Drainage Class: MWD

Taxonomy (Subgroup): Vitrandic/Aquandic Dystroxerepts

Field Observations Confirm Mapped Type? Yes (No)

Profile Description:

Depth (inches)	Horizon	Matrix Color (Munsell Moist)	Mottle Colors (Munsell Moist)	Mottle Abundance/ Size/Contrast	Texture, Concretions, Structure, etc.
0-16		10YR 2/2			Gravelly Sandy loam

Hydric Soil Indicators:

- ___ Histosol
- ___ Histic Epipedon
- ___ Sulfidic Odor
- ___ Aquic Moisture Regime
- ___ Reducing Conditions
- ___ Gleyed or Low-Chroma Colors
- ___ Concretions
- ___ High Organic Content in Surface Layer in Sandy Soils
- ___ Organic Streaking in Sandy Soils
- ___ Listed on Local Hydric Soils List
- ___ Listed on National Hydric Soils List
- ___ Other (Explain in Remarks)

Remarks: No hydric indicators.

WETLAND DETERMINATION

Hydrophytic Vegetation Present?	Yes (No) (Circle)	
Wetland Hydrology Present?	Yes (No)	
Hydric Soils Present?	Yes (No)	
		(Circle)
Is this Sampling Point Within a Wetland?		Yes (No)

Remarks: Very steep upland slope.

Approved by HQUSACE 3/92

DATA FORM
ROUTINE WETLAND DETERMINATION
(1987 COE Wetlands Delineation Manual)

Project/Site: McIntosh Properties Applicant/Owner: City of Bellevue Investigator: DCJ, BK	Date: 2-6-08 County: KING State: WA
Do Normal Circumstances exist on the site? **Yes** No Is the site significantly disturbed (Atypical Situation)? Yes **No** Is the area a potential Problem Area? Yes **No** (If needed, explain on reverse.)	Community ID: PEM Transect ID: W2 Plot ID: P1

VEGETATION

Dominant Plant Species	Stratum	Indicator	Dominant Plant Species	Stratum	Indicator
1. Ranunculus repens 20	H	FACW	9.		
2. Equisetum arvense 20	H	FAC	10.		
3. Grass 60	H		11.		
4.			12.		
5.			13.		
6.			14.		
7.			15.		
8.			16.		

Percent of Dominant Species that are OBL, FACW or FAC (excluding FAC-). 3÷3 = 100%

Remarks: Grass assumed FAC or wetter.

HYDROLOGY

X Recorded Data (Describe in Remarks):
___ Stream, Lake, or Tide Gauge
X Aerial Photographs
___ Other
X No Recorded Data Available

Field Observations:

Depth of Surface Water: - (in.)

Depth to Free Water in Pit: 7 (in.)

Depth to Saturated Soil: Surface (in.)

Wetland Hydrology Indicators:
Primary Indicators:
___ Inundated
X Saturated in Upper 12 Inches
___ Water Marks
___ Drift Lines
___ Sediment Deposits
___ Drainage Patterns in Wetlands
Secondary Indicators (2 or more required):
___ Oxidized Root Channels in Upper 12 Inches
___ Water-Stained Leaves
___ Local Soil Survey Data
___ FAC-Neutral Test
___ Other (Explain in Remarks)

Remarks: Small depressional area w/ high groundwater.

SOILS

Map Unit Name (Series and Phase): Norma Sandy loam

Drainage Class: PD

Taxonomy (Subgroup): Aquandic Humaquepts

Field Observations Confirm Mapped Type? Yes (No)

Profile Description:

Depth (inches)	Horizon	Matrix Color (Munsell Moist)	Mottle Colors (Munsell Moist)	Mottle Abundance/ Size/Contrast	Texture, Concretions, Structure, etc.
0-16		10YR 3/1	10YR 3/4	few, many, dist	Silty Clay loam

Hydric Soil Indicators:

- ___ Histosol
- ___ Histic Epipedon
- ___ Sulfidic Odor
- ___ Aquic Moisture Regime
- X Reducing Conditions
- X Gleyed or Low-Chroma Colors
- ___ Concretions
- ___ High Organic Content in Surface Layer in Sandy Soils
- ___ Organic Streaking in Sandy Soils
- ___ Listed on Local Hydric Soils List
- X Listed on National Hydric Soils List
- ___ Other (Explain in Remarks)

Remarks:

WETLAND DETERMINATION

Hydrophytic Vegetation Present?	(Yes) No	(Circle)
Wetland Hydrology Present?	(Yes) No	
Hydric Soils Present?	(Yes) No	

(Circle)

Is this Sampling Point Within a Wetland? (Yes) No

Remarks: Very small depressional closed wetland. Area is likely mowed during summer and fall.

Approved by HQUSACE 3/92

DATA FORM
ROUTINE WETLAND DETERMINATION
(1987 COE Wetlands Delineation Manual)

Project/Site: McIntosh Properties Applicant/Owner: City of Bellevue Investigator: DCJ, BK	Date: 2-6-08 County: KING State: WA
Do Normal Circumstances exist on the site? **Yes** No Is the site significantly disturbed (Atypical Situation)? Yes **No** Is the area a potential Problem Area? Yes **No** (If needed, explain on reverse.)	Community ID: UPL Transect ID: W2 Plot ID: P2

VEGETATION

Dominant Plant Species	Stratum	Indicator	Dominant Plant Species	Stratum	Indicator
1. Ranunculus repens 10	H	FACW	9.		
2. Tolmiea menziesii 5	H	FAC	10.		
* 3. Festuca arundinacea 20	H	FAC-	11.		
4. Equisetum arvense 10	H	FAC	12.		
* 5. Grasses 50	H		13.		
* 6. Rubus discolor 20	S	FACW	14.		
* 7. Acer circinatum 20	S	FAC-	15.		
8. Sambucus racemosa 10	S	FACW	16.		

Percent of Dominant Species that are OBL, FACW or FAC (excluding FAC-). 1:4 = 25%

Remarks: Grasses assumed FAC or wetter.

HYDROLOGY

X Recorded Data (Describe in Remarks): ___ Stream, Lake, or Tide Gauge X Aerial Photographs ___ Other X No Recorded Data Available	Wetland Hydrology Indicators: Primary Indicators: ___ Inundated ___ Saturated in Upper 12 Inches ___ Water Marks ___ Drift Lines ___ Sediment Deposits ___ Drainage Patterns in Wetlands Secondary Indicators (2 or more required): ___ Oxidized Root Channels in Upper 12 Inches ___ Water-Stained Leaves ___ Local Soil Survey Data ___ FAC-Neutral Test ___ Other (Explain in Remarks)
Field Observations: Depth of Surface Water: _____(in.) Depth to Free Water in Pit: _____(in.) Depth to Saturated Soil: _____(in.)	

Remarks: No hydrology indicators.

SOILS

Map Unit Name (Series and Phase): Norma Sandy loam

Drainage Class: PD

Field Observations Confirm Mapped Type? Yes (No)

Taxonomy (Subgroup): Aquandic Humaquepts

Profile Description:

Depth (inches)	Horizon	Matrix Color (Munsell Moist)	Mottle Colors (Munsell Moist)	Mottle Abundance/ Size/Contrast	Texture, Concretions, Structure, etc.
0-16		10YR3/2			loam

Hydric Soil Indicators:

- ___ Histosol
- ___ Histic Epipedon
- ___ Sulfidic Odor
- ___ Aquic Moisture Regime
- ___ Reducing Conditions
- ___ Gleyed or Low-Chroma Colors
- ___ Concretions
- ___ High Organic Content in Surface Layer in Sandy Soils
- ___ Organic Streaking in Sandy Soils
- ___ Listed on Local Hydric Soils List
- ___ Listed on National Hydric Soils List
- ___ Other (Explain in Remarks)

Remarks: No hydric indicators.

WETLAND DETERMINATION

Hydrophytic Vegetation Present?	Yes (No) (Circle)	
Wetland Hydrology Present?	Yes (No)	
Hydric Soils Present?	Yes (No)	
		(Circle)
Is this Sampling Point Within a Wetland?		Yes (No)

Remarks: ON edge of lawn area.

Approved by HQUSACE 3/92

Attachment B

Ecology Rating Forms

Wetland name or number W1

WETLAND RATING FORM – WESTERN WASHINGTON

Version 2 - Updated June 2006 to increase accuracy and reproducibility among users

Name of wetland (if known): W1 Date of site visit: 2-6-08

Rated by D. Johnson Trained by Ecology? Yes X No___ Date of training 5/05

SEC: 16 TWNSHP: 24N RNGE: 5E Is S/T/R in Appendix D? Yes___ No X

Map of wetland unit: Figure 1 Estimated size >0.73 acres

SUMMARY OF RATING

Category based on FUNCTIONS provided by wetland

I___ II___ III X IV___

Category I = Score >=70
Category II = Score 51-69
Category III = Score 30-50
Category IV = Score < 30

Score for Water Quality Functions	12
Score for Hydrologic Functions	12
Score for Habitat Functions	21
TOTAL score for Functions	45

Category based on SPECIAL CHARACTERISTICS of wetland

I___ II___ Does not Apply X

Final Category (choose the "highest" category from above) III

Summary of basic information about the wetland unit

Wetland Unit has Special Characteristics		Wetland HGM Class used for Rating	
Estuarine		Depressional	
Natural Heritage Wetland		Riverine	
Bog		Lake-fringe	
Mature Forest		Slope	X
Old Growth Forest		Flats	
Coastal Lagoon		Freshwater Tidal	
Interdunal			
None of the above		Check if unit has multiple HGM classes present	

Wetland name or number W1

Does the wetland unit being rated meet any of the criteria below?

If you answer YES to any of the questions below you will need to protect the wetland according to the regulations regarding the special characteristics found in the wetland.

Check List for Wetlands That May Need Additional Protection (in addition to the protection recommended for its category)	YES	NO
SP1. *Has the wetland unit been documented as a habitat for any Federally listed Threatened or Endangered* ***animal or plant*** *species (T/E species)?* For the purposes of this rating system, "documented" means the wetland is on the appropriate state or federal database.		X
SP2. *Has the wetland unit been documented as habitat for any State listed Threatened or Endangered* ***animal*** *species?* For the purposes of this rating system, "documented" means the wetland is on the appropriate state database. Note: Wetlands with State listed plant species are categorized as Category I Natural Heritage Wetlands (see p. 19 of data form).		X
SP3. *Does the wetland unit contain individuals of Priority species listed by the WDFW for the state?*		X
SP4. *Does the wetland unit have a local significance in addition to its functions?* For example, the wetland has been identified in the Shoreline Master Program, the Critical Areas Ordinance, or in a local management plan as having special significance.		X

To complete the next part of the data sheet you will need to determine the Hydrogeomorphic Class of the wetland being rated.

The hydrogeomorphic classification groups wetlands into those that function in similar ways. This simplifies the questions needed to answer how well the wetland functions. The Hydrogeomorphic Class of a wetland can be determined using the key below. See p. 24 for more detailed instructions on classifying wetlands.

Wetland name or number W1

Classification of Wetland Units in Western Washington

If the hydrologic criteria listed in each question do not apply to the entire unit being rated, you probably have a unit with multiple HGM classes. In this case, identify which hydrologic criteria in questions 1-7 apply, and go to Question 8.

1. Are the water levels in the entire unit usually controlled by tides (i.e. except during floods)?
NO – go to 2 **YES** – the wetland class is **Tidal Fringe**

If yes, is the salinity of the water during periods of annual low flow below 0.5 ppt (parts per thousand)? **YES – Freshwater Tidal Fringe** **NO – Saltwater Tidal Fringe (Estuarine)**

If your wetland can be classified as a Freshwater Tidal Fringe use the forms for ***Riverine*** *wetlands. If it is Saltwater Tidal Fringe it is rated as an* ***Estuarine*** *wetland.* Wetlands that were called estuarine in the first and second editions of the rating system are called Salt Water Tidal Fringe in the Hydrogeomorphic Classification. Estuarine wetlands were categorized separately in the earlier editions, and this separation is being kept in this revision. To maintain consistency between editions, the term "Estuarine" wetland is kept. Please note, however, that the characteristics that define Category I and II estuarine wetlands have changed (see p.).

2. The entire wetland unit is flat and precipitation is the only source (>90%) of water to it. Groundwater and surface water runoff are NOT sources of water to the unit.
NO – go to 3 **YES** – The wetland class is **Flats**

If your wetland can be classified as a "Flats" wetland, use the form for **Depressional** wetlands.

3. Does the entire wetland unit **meet both** of the following criteria?
___The vegetated part of the wetland is on the shores of a body of permanent open water (without any vegetation on the surface) at least 20 acres (8 ha) in size;
___At least 30% of the open water area is deeper than 6.6 ft (2 m)?
NO – go to 4 **YES** – The wetland class is **Lake-fringe (Lacustrine Fringe)**

4. Does the entire wetland unit **meet all** of the following criteria?
_X_ The wetland is on a slope (*slope can be very gradual*),
_X_ The water flows through the wetland in one direction (unidirectional) and usually comes from seeps. It may flow subsurface, as sheetflow, or in a swale without distinct banks.
_X_ The water leaves the wetland **without being impounded**?
NOTE: *Surface water does not pond in these type of wetlands except occasionally in very small and shallow depressions or behind hummocks (depressions are usually <3ft diameter and less than 1 foot deep).*
NO - go to 5 **YES** – The wetland class is **Slope**

Wetland name or number wl

5. Does the entire wetland unit **meet all** of the following criteria?

____ The unit is in a valley, or stream channel, where it gets inundated by overbank flooding from that stream or river

____ The overbank flooding occurs at least once every two years.

NOTE: The riverine unit can contain depressions that are filled with water when the river is not flooding.

NO - go to 6 **YES** – The wetland class is **Riverine**

6. Is the entire wetland unit in a topographic depression in which water ponds, or is saturated to the surface, at some time during the year. *This means that any outlet, if present, is higher than the interior of the wetland.*

NO – go to 7 **YES** – The wetland class is **Depressional**

7. Is the entire wetland unit located in a very flat area with no obvious depression and no overbank flooding. The unit does not pond surface water more than a few inches. The unit seems to be maintained by high groundwater in the area. The wetland may be ditched, but has no obvious natural outlet.

NO – go to 8 **YES** – The wetland class is **Depressional**

8. Your wetland unit seems to be difficult to classify and probably contains several different HGM clases. For example, seeps at the base of a slope may grade into a riverine floodplain, or a small stream within a depressional wetland has a zone of flooding along its sides. GO BACK AND IDENTIFY WHICH OF THE HYDROLOGIC REGIMES DESCRIBED IN QUESTIONS 1-7 APPLY TO DIFFERENT AREAS IN THE UNIT (make a rough sketch to help you decide). Use the following table to identify the appropriate class to use for the rating system if you have several HGM classes present within your wetland. NOTE: Use this table only if the class that is recommended in the second column represents 10% or more of the total area of the wetland unit being rated. If the area of the class listed in column 2 is less than 10% of the unit; classify the wetland using the class that represents more than 90% of the total area.

HGM Classes within the wetland unit being rated	*HGM Class to Use in Rating*
Slope + Riverine	Riverine
Slope + Depressional	Depressional
Slope + Lake-fringe	Lake-fringe
Depressional + Riverine along stream within boundary	Depressional
Depressional + Lake-fringe	Depressional
Salt Water Tidal Fringe and any other class of freshwater wetland	Treat as ESTUARINE under wetlands with special characteristics

If you are unable still to determine which of the above criteria apply to your wetland, or if you have more than 2 HGM classes within a wetland boundary, classify the wetland as **Depressional** for the rating.

Wetland name or number W1

S	**Slope Wetlands** WATER QUALITY FUNCTIONS - Indicators that the wetland unit functions to improve water quality	**Points** (only 1 score per box)
S	**S 1. Does the wetland unit have the <u>potential</u> to improve water quality?**	*(see p.64)*
S	S 1.1 Characteristics of average slope of unit: Slope is1% or less *(a 1% slope has a 1 foot vertical drop in elevation for every 100 ft horizontal distance)* points = 3 Slope is 1% - 2% points = 2 Slope is 2% - 5% points = 1 Slope is greater than 5% points = 0	1
S	S 1.2 The soil 2 inches below the surface (or duff layer) is clay or organic *(use NRCS definitions)* YES = 3 points NO = 0 points	3
S	S 1.3 Characteristics of the vegetation in the wetland that trap sediments and pollutants: *Choose the points appropriate for the description that best fits the vegetation in the wetland. Dense vegetation means you have trouble seeing the soil surface (>75% cover), and uncut means not grazed or mowed and plants are higher than 6 inches.* Dense, uncut, herbaceous vegetation > 90% of the wetland area points = 6 Dense, uncut, herbaceous vegetation > 1/2 of area points = 3 Dense, woody, vegetation > ½ of area points = 2 Dense, uncut, herbaceous vegetation > 1/4 of area points = 1 Does not meet any of the criteria above for vegetation points = 0 Aerial photo or map with vegetation polygons	Figure 1 2
S	**Total for S 1** *Add the points in the boxes above*	6
S	**S 2. Does the wetland unit have the <u>opportunity</u> to improve water quality?** Answer YES if you know or believe there are pollutants in groundwater or surface water coming into the wetland that would otherwise reduce water quality in streams, lakes or groundwater downgradient from the wetland. *Note which of the following conditions provide the sources of pollutants. A unit may have pollutants coming from several sources, but any single source would qualify as opportunity.* — Grazing in the wetland or within 150ft — Untreated stormwater discharges to wetland — Tilled fields, logging, or orchards within 150 feet of wetland X Residential, urban areas, or golf courses are within 150 ft upslope of wetland — Other_____ (YES) multiplier is 2 NO multiplier is 1	*(see p.67)* multiplier 2
S	**TOTAL - Water Quality Functions** Multiply the score from S1 by S2 ***Add score to table on p. 1***	12

Comments

Wetland name or number W1

S	**Slope Wetlands** HYDROLOGIC FUNCTIONS - Indicators that the wetland unit functions to reduce flooding and stream erosion	**Points** (only 1 score per box)
	S 3. Does the wetland unit have the <u>potential</u> to reduce flooding and stream erosion?	*(see p.68)*
S	S 3.1 Characteristics of vegetation that reduce the velocity of surface flows during storms. *Choose the points appropriate for the description that best fit conditions in the wetland. (stems of plants should be thick enough (usually > 1/8in), or dense enough, to remain erect during surface flows)* Dense, uncut, **rigid** vegetation covers > 90% of the area of the wetland. points = 6 Dense, uncut, **rigid** vegetation > 1/2 area of wetland points = 3 Dense, uncut, **rigid** vegetation > 1/4 area points = 1 More than 1/4 of area is grazed, mowed, tilled or vegetation is not rigid points = 0	6
S	S 3.2 Characteristics of slope wetland that holds back small amounts of flood flows: The slope wetland has small surface depressions that can retain water over at least 10% of its area. YES points = 2 NO points = 0	0
S	*Add the points in the boxes above*	6
S	**S 4. Does the wetland have the <u>opportunity</u> to reduce flooding and erosion?** Is the wetland in a landscape position where the reduction in water velocity it provides helps protect downstream property and aquatic resources from flooding or excessive and/or erosive flows? *Note which of the following conditions apply.* 1 Wetland has surface runoff that drains to a river or stream that has flooding problems — Other_____ *(Answer NO if the major source of water is controlled by a reservoir (e.g. wetland is a seep that is on the downstream side of a dam)* YES multiplier is 2 NO multiplier is 1	*(see p. 70)* multiplier 2
S	**TOTAL - Hydrologic Functions** Multiply the score from S 3 by S 4 ***Add score to table on p. 1***	12

Comments

Wetland name or number W 1

These questions apply to wetlands of all HGM classes. HABITAT FUNCTIONS - Indicators that unit functions to provide important habitat	**Points** (only 1 score per box)
H 1. Does the wetland unit have the potential to provide habitat for many species?	
H 1.1 Vegetation structure ***(see p. 72)*** *Check the types of vegetation classes present (as defined by Cowardin)- Size threshold for each class is ¼ acre or more than 10% of the area if unit is smaller than 2.5 acres.* ____Aquatic bed ____Emergent plants _X_Scrub/shrub (areas where shrubs have >30% cover) _X_Forested (areas where trees have >30% cover) *If the unit has a forested class check if:* _X_The forested class has 3 out of 5 strata (canopy, sub-canopy, shrubs, herbaceous, moss/ground-cover) that each cover 20% within the forested polygon *Add the number of vegetation structures that qualify. If you have:* 4 structures or more — points = 4 3 structures — points = 2 2 structures — points = 1 1 structure — points = 0 Map of Cowardin vegetation classes	**Figure** 1 2
H 1.2. Hydroperiods ***(see p. 73)*** *Check the types of water regimes (hydroperiods) present within the wetland. The water regime has to cover more than 10% of the wetland or ¼ acre to count. (see text for descriptions of hydroperiods)* ____Permanently flooded or inundated — 4 or more types present — points = 3 ____Seasonally flooded or inundated — 3 types present — points = 2 ____Occasionally flooded or inundated — 2 types present — point = 1 _X_Saturated only — 1 type present — points = 0 _X_ Permanently flowing stream or river in, or adjacent to, the wetland ____ Seasonally flowing stream in, or adjacent to, the wetland ____ ***Lake-fringe wetland* = 2 points** ____***Freshwater tidal wetland* = 2 points** Map of hydroperiods	**Figure** 1 1
H 1.3. Richness of Plant Species ***(see p. 75)*** Count the number of plant species in the wetland that cover at least 10 ft^2. (*different patches of the same species can be combined to meet the size threshold)* *You do not have to name the species.* *Do not include Eurasian Milfoil, reed canarygrass, purple loosestrife, Canadian Thistle* If you counted: > 19 species — points = 2 5 - 19 species — points = 1 < 5 species — points = 0 *List species below if you want to:*	1

Total for page 4

Wetland name or number W1

H 1.4. Interspersion of habitats *(see p. 76)* Decide from the diagrams below whether interspersion between Cowardin vegetation classes (described in H 1.1), or the classes and unvegetated areas (can include open water or mudflats) is high, medium, low, or none. 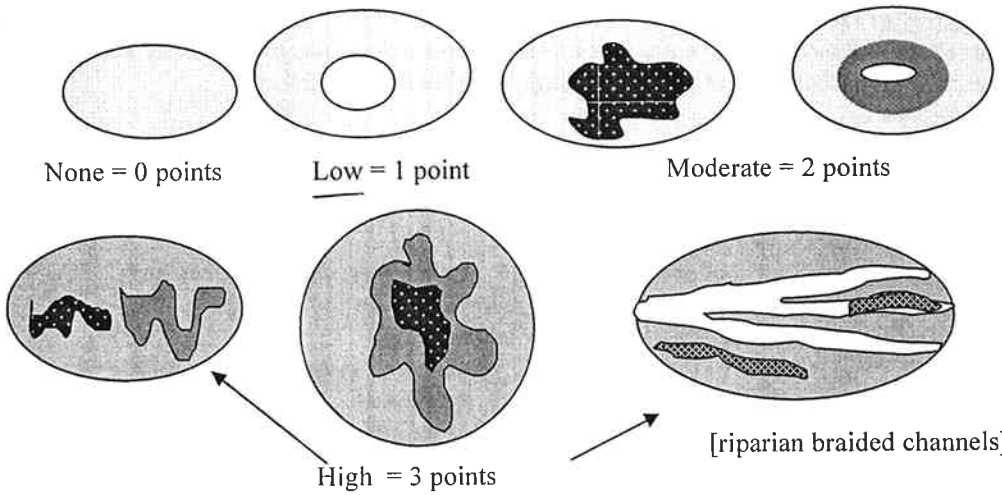 None = 0 points Low = 1 point Moderate = 2 points High = 3 points [riparian braided channels] NOTE: If you have four or more classes or three vegetation classes and open water the rating is always "high". Use map of Cowardin vegetation classes	Figure 1 1
H 1.5. Special Habitat Features: *(see p. 77)* *Check the habitat features that are present in the wetland. The number of checks is the number of points you put into the next column.* X Large, downed, woody debris within the wetland (>4in. diameter and 6 ft long). X Standing snags (diameter at the bottom > 4 inches) in the wetland X Undercut banks are present for at least 6.6 ft (2m) and/or overhanging vegetation extends at least 3.3 ft (1m) over a stream (or ditch) in, or contiguous with the unit, for at least 33 ft (10m) ___ Stable steep banks of fine material that might be used by beaver or muskrat for denning (>30degree slope) OR signs of recent beaver activity are present *(cut shrubs or trees that have not yet turned grey/brown)* ___ At least ¼ acre of thin-stemmed persistent vegetation or woody branches are present in areas that are permanently or seasonally inundated. *(structures for egg-laying by amphibians)* X Invasive plants cover less than 25% of the wetland area in each stratum of plants *NOTE: The 20% stated in early printings of the manual on page 78 is an error.*	4
H 1. TOTAL Score - potential for providing habitat *Add the scores from H1.1, H1.2, H1.3, H1.4, H1.5*	9

Comments

Wetland name or number W1

H 2. Does the wetland unit have the opportunity to provide habitat for many species?	
H 2.1 Buffers *(see p. 80)* *Choose the description that best represents condition of buffer of wetland unit. The highest scoring criterion that applies to the wetland is to be used in the rating. See text for definition of "undisturbed."* — 100 m (330ft) of relatively undisturbed vegetated areas, rocky areas, or open water >95% of circumference. No structures are within the undisturbed part of buffer. (relatively undisturbed also means no-grazing, no landscaping, no daily human use) **Points = 5** X 100 m (330 ft) of relatively undisturbed vegetated areas, rocky areas, or open water > 50% circumference. **Points = 4** — 50 m (170ft) of relatively undisturbed vegetated areas, rocky areas, or open water >95% circumference. **Points = 4** — 100 m (330ft) of relatively undisturbed vegetated areas, rocky areas, or open water > 25% circumference, . **Points = 3** — 50 m (170ft) of relatively undisturbed vegetated areas, rocky areas, or open water for > 50% circumference. **Points = 3** **If buffer does not meet any of the criteria above** — No paved areas (except paved trails) or buildings within 25 m (80ft) of wetland > 95% circumference. Light to moderate grazing, or lawns are OK. **Points = 2** — No paved areas or buildings within 50m of wetland for >50% circumference. Light to moderate grazing, or lawns are OK. **Points = 2** — Heavy grazing in buffer. **Points = 1** — Vegetated buffers are <2m wide (6.6ft) for more than 95% of the circumference (e.g. tilled fields, paving, basalt bedrock extend to edge of wetland **Points = 0.** — Buffer does not meet any of the criteria above. **Points = 1** Aerial photo showing buffers	Figure 1 4
H 2.2 Corridors and Connections *(see p. 81)* H 2.2.1 Is the wetland part of a relatively undisturbed and unbroken vegetated corridor (either riparian or upland) that is at least 150 ft wide, has at least 30% cover of shrubs, forest or native undisturbed prairie, that connects to estuaries, other wetlands or undisturbed uplands that are at least 250 acres in size? (*dams in riparian corridors, heavily used gravel roads, paved roads, are considered breaks in the corridor*). YES = **4 points** (*go to H 2.3*) NO = go to H 2.2.2 H 2.2.2 Is the wetland part of a relatively undisturbed and unbroken vegetated corridor (either riparian or upland) that is at least 50ft wide, has at least 30% cover of shrubs or forest, and connects to estuaries, other wetlands or undisturbed uplands that are at least 25 acres in size? **OR** a **Lake-fringe** wetland, if it does not have an undisturbed corridor as in the question above? YES = **2 points** (*go to H 2.3*) NO = H 2.2.3 H 2.2.3 Is the wetland: within 5 mi (8km) of a brackish or salt water estuary OR within 3 mi of a large field or pasture (>40 acres) OR within 1 mi of a lake greater than 20 acres? YES = **1 point** NO = **0 points**	2

Total for page 6

Wetland name or number W1

H 2.3 Near or adjacent to other priority habitats listed by WDFW *(see p. 82)*

Which of the following priority habitats are within 330ft (100m) of the wetland unit? *NOTE: the connections do not have to be relatively undisturbed.*

These are DFW definitions. Check with your local DFW biologist if there are any questions.

X **Riparian**: The area adjacent to aquatic systems with flowing water that contains elements of both aquatic and terrestrial ecosystems which mutually influence each other.

____**Aspen Stands:** Pure or mixed stands of aspen greater than 0.8 ha (2 acres).

____**Cliffs:** Greater than 7.6 m (25 ft) high and occurring below 5000 ft.

____**Old-growth forests:** (Old-growth west of Cascade crest) Stands of at least 2 tree species, forming a multi-layered canopy with occasional small openings; with at least 20 trees/ha (8 trees/acre) > 81 cm (32 in) dbh or > 200 years of age.

____**Mature forests:** Stands with average diameters exceeding 53 cm (21 in) dbh; crown cover may be less that 100%; crown cover may be less that 100%; decay, decadence, numbers of snags, and quantity of large downed material is generally less than that found in old-growth; 80 - 200 years old west of the Cascade crest.

____**Prairies:** Relatively undisturbed areas (as indicated by dominance of native plants) where grasses and/or forbs form the natural climax plant community.

____**Talus:** Homogenous areas of rock rubble ranging in average size 0.15 - 2.0 m (0.5 - 6.5 ft), composed of basalt, andesite, and/or sedimentary rock, including riprap slides and mine tailings. May be associated with cliffs.

____**Caves:** A naturally occurring cavity, recess, void, or system of interconnected passages

____**Oregon white Oak:** Woodlands Stands of pure oak or oak/conifer associations where canopy coverage of the oak component of the stand is 25%.

____**Urban Natural Open Space**: A priority species resides within or is adjacent to the open space and uses it for breeding and/or regular feeding; and/or the open space functions as a corridor connecting other *priority habitats*, especially those that would otherwise be isolated; and/or the open space is an isolated remnant of natural habitat larger than 4 ha (10 acres) and is surrounded by urban development.

____**Estuary/Estuary-like:** Deepwater tidal habitats and adjacent tidal wetlands, usually semi-enclosed by land but with open, partly obstructed or sporadic access to the open ocean, and in which ocean water is at least occasionally diluted by freshwater runoff from the land. The salinity may be periodically increased above that of the open ocean by evaporation. Along some low-energy coastlines there is appreciable dilution of sea water. Estuarine habitat extends upstream and landward to where ocean-derived salts measure less than 0.5ppt. during the period of average annual low flow. Includes both estuaries and lagoons.

____**Marine/Estuarine Shorelines**: Shorelines include the intertidal and subtidal zones of beaches, and may also include the backshore and adjacent components of the terrestrial landscape (e.g., cliffs, snags, mature trees, dunes, meadows) that are important to shoreline associated fish and wildlife and that contribute to shoreline function (e.g., sand/rock/log recruitment, nutrient contribution, erosion control).

If wetland has **3 or more** priority habitats = **4 points**

If wetland has **2** priority habitats = **3 points**

If wetland has **1** priority habitat = **1 point** No habitats = 0 points

Note: All vegetated wetlands are by definition a priority habitat but are not included in this list. Nearby wetlands are addressed in question H 2.4)

Wetland name or number W1

H 2.4 Wetland Landscape *(choose the **one** description of the landscape around the wetland that best fits)* ***(see p. 84)*** There are at least 3 other wetlands within ½ mile, and the connections between them are relatively undisturbed (light grazing between wetlands OK, as is lake shore with some boating, but connections should NOT be bisected by paved roads, fill, fields, or other development. points = 5 The wetland is Lake-fringe on a lake with little disturbance and there are 3 other lake-fringe wetlands within ½ mile points = 5 There are at least 3 other wetlands within ½ mile, BUT the connections between them are disturbed points = 3 The wetland is Lake-fringe on a lake **with** disturbance and there are 3 other lake-fringe wetland within ½ mile points = 3 There is at least 1 wetland within ½ mile. points = 2 There are no wetlands within ½ mile. points = 0	5
H 2. TOTAL Score - opportunity for providing habitat *Add the scores from H2.1,H2.2, H2.3, H2.4*	12
TOTAL for H 1 from page 14	9
Total Score for Habitat Functions – add the points for H 1, H 2 and record the result on p. 1	21

Wetland name or number W2

WETLAND RATING FORM – WESTERN WASHINGTON

Version 2 - Updated June 2006 to increase accuracy and reproducibility among users

Name of wetland (if known): W2 Date of site visit: 2-6-08

Rated by D. JOHNSON Trained by Ecology? Yes X No___ Date of training 5/05

SEC: 16 TWNSHP: 24N RNGE: 5E Is S/T/R in Appendix D? Yes___ No X

Map of wetland unit: Figure 1 Estimated size 254 sq.feet

SUMMARY OF RATING

Category based on FUNCTIONS provided by wetland

I___ II___ III___ IV X

Category I = Score >=70
Category II = Score 51-69
Category III = Score 30-50
Category IV = Score < 30

Score for Water Quality Functions	6
Score for Hydrologic Functions	5
Score for Habitat Functions	10
TOTAL score for Functions	21

Category based on SPECIAL CHARACTERISTICS of wetland

I___ II___ Does not Apply X

Final Category (choose the "highest" category from above) IV

Summary of basic information about the wetland unit

Wetland Unit has Special Characteristics		Wetland HGM Class used for Rating	
Estuarine		Depressional	X
Natural Heritage Wetland		Riverine	
Bog		Lake-fringe	
Mature Forest		Slope	
Old Growth Forest		Flats	
Coastal Lagoon		Freshwater Tidal	
Interdunal			
None of the above		Check if unit has multiple HGM classes present	

Wetland name or number W2

Does the wetland unit being rated meet any of the criteria below?

If you answer YES to any of the questions below you will need to protect the wetland according to the regulations regarding the special characteristics found in the wetland.

Check List for Wetlands That May Need Additional Protection (in addition to the protection recommended for its category)	YES	NO
SP1. *Has the wetland unit been documented as a habitat for any Federally listed Threatened or Endangered* ***animal or plant*** *species (T/E species)?* For the purposes of this rating system, "documented" means the wetland is on the appropriate state or federal database.		X
SP2. *Has the wetland unit been documented as habitat for any State listed Threatened or Endangered* ***animal*** *species?* For the purposes of this rating system, "documented" means the wetland is on the appropriate state database. Note: Wetlands with State listed plant species are categorized as Category I Natural Heritage Wetlands (see p. 19 of data form).		X
SP3. *Does the wetland unit contain individuals of Priority species listed by the WDFW for the state?*		X
SP4. *Does the wetland unit have a local significance in addition to its functions?* For example, the wetland has been identified in the Shoreline Master Program, the Critical Areas Ordinance, or in a local management plan as having special significance.		X

To complete the next part of the data sheet you will need to determine the Hydrogeomorphic Class of the wetland being rated.

The hydrogeomorphic classification groups wetlands into those that function in similar ways. This simplifies the questions needed to answer how well the wetland functions. The Hydrogeomorphic Class of a wetland can be determined using the key below. See p. 24 for more detailed instructions on classifying wetlands.

Wetland name or number W2

Classification of Wetland Units in Western Washington

If the hydrologic criteria listed in each question do not apply to the entire unit being rated, you probably have a unit with multiple HGM classes. In this case, identify which hydrologic criteria in questions 1-7 apply, and go to Question 8.

1. Are the water levels in the entire unit usually controlled by tides (i.e. except during floods)?

NO – go to 2 **YES** – the wetland class is **Tidal Fringe**

If yes, is the salinity of the water during periods of annual low flow below 0.5 ppt (parts per thousand)? **YES – Freshwater Tidal Fringe NO – Saltwater Tidal Fringe (Estuarine)**

If your wetland can be classified as a Freshwater Tidal Fringe use the forms for ***Riverine*** *wetlands. If it is Saltwater Tidal Fringe it is rated as an* ***Estuarine*** *wetland.* Wetlands that were called estuarine in the first and second editions of the rating system are called Salt Water Tidal Fringe in the Hydrogeomorphic Classification. Estuarine wetlands were categorized separately in the earlier editions, and this separation is being kept in this revision. To maintain consistency between editions, the term "Estuarine" wetland is kept. Please note, however, that the characteristics that define Category I and II estuarine wetlands have changed (see p.).

2. The entire wetland unit is flat and precipitation is the only source (>90%) of water to it. Groundwater and surface water runoff are NOT sources of water to the unit.

NO – go to 3 **YES** – The wetland class is **Flats**

If your wetland can be classified as a "Flats" wetland, use the form for **Depressional** wetlands.

3. Does the entire wetland unit **meet both** of the following criteria?

___The vegetated part of the wetland is on the shores of a body of permanent open water (without any vegetation on the surface) at least 20 acres (8 ha) in size;

___At least 30% of the open water area is deeper than 6.6 ft (2 m)?

NO – go to 4 **YES** – The wetland class is **Lake-fringe (Lacustrine Fringe)**

4. Does the entire wetland unit **meet all** of the following criteria?

____The wetland is on a slope (*slope can be very gradual*),

____The water flows through the wetland in one direction (unidirectional) and usually comes from seeps. It may flow subsurface, as sheetflow, or in a swale without distinct banks.

____The water leaves the wetland **without being impounded**?

NOTE: *Surface water does not pond in these type of wetlands except occasionally in very small and shallow depressions or behind hummocks (depressions are usually <3ft diameter and less than 1 foot deep).*

NO - go to 5 **YES** – The wetland class is **Slope**

Wetland name or number W2

5. Does the entire wetland unit **meet all** of the following criteria?

____ The unit is in a valley, or stream channel, where it gets inundated by overbank flooding from that stream or river

____ The overbank flooding occurs at least once every two years.

NOTE: The riverine unit can contain depressions that are filled with water when the river is not flooding.

NO - go to 6 **YES** – The wetland class is **Riverine**

6. Is the entire wetland unit in a topographic depression in which water ponds, or is saturated to the surface, at some time during the year. *This means that any outlet, if present, is higher than the interior of the wetland.*

NO – go to 7 **YES** – The wetland class is **Depressional**

7. Is the entire wetland unit located in a very flat area with no obvious depression and no overbank flooding. The unit does not pond surface water more than a few inches. The unit seems to be maintained by high groundwater in the area. The wetland may be ditched, but has no obvious natural outlet.

NO – go to 8 **YES** – The wetland class is **Depressional**

8. Your wetland unit seems to be difficult to classify and probably contains several different HGM clases. For example, seeps at the base of a slope may grade into a riverine floodplain, or a small stream within a depressional wetland has a zone of flooding along its sides. GO BACK AND IDENTIFY WHICH OF THE HYDROLOGIC REGIMES DESCRIBED IN QUESTIONS 1-7 APPLY TO DIFFERENT AREAS IN THE UNIT (make a rough sketch to help you decide). Use the following table to identify the appropriate class to use for the rating system if you have several HGM classes present within your wetland. NOTE: Use this table only if the class that is recommended in the second column represents 10% or more of the total area of the wetland unit being rated. If the area of the class listed in column 2 is less than 10% of the unit; classify the wetland using the class that represents more than 90% of the total area.

HGM Classes within the wetland unit being rated	*HGM Class to Use in Rating*
Slope + Riverine	Riverine
Slope + Depressional	Depressional
Slope + Lake-fringe	Lake-fringe
Depressional + Riverine along stream within boundary	Depressional
Depressional + Lake-fringe	Depressional
Salt Water Tidal Fringe and any other class of freshwater wetland	Treat as ESTUARINE under wetlands with special characteristics

If you are unable still to determine which of the above criteria apply to your wetland, or if you have more than 2 HGM classes within a wetland boundary, classify the wetland as **Depressional** for the rating.

Wetland name or number W2

D	**Depressional and Flats Wetlands** **WATER QUALITY FUNCTIONS** - Indicators that the wetland unit functions to improve water quality	**Points** (only 1 score per box)
D	**D 1. Does the wetland unit have the potential to improve water quality?**	*(see p.38)*
D	D 1.1 Characteristics of surface water flows out of the wetland: Unit is a depression with no surface water leaving it (no outlet) points = 3 Unit has an intermittently flowing, OR highly constricted permanently flowing outlet points = 2 Unit has an unconstricted, or slightly constricted, surface outlet (*permanently flowing*) points = 1 Unit is a "flat" depression (Q. 7 on key), or in the Flats class, with permanent surface outflow **and no obvious natural outlet** and/or outlet is a man-made ditch points = 1 (*If ditch is not permanently flowing treat unit as "intermittently flowing"*) Provide photo or drawing	Figure 1 3
D	S 1.2 The soil 2 inches below the surface (or duff layer) is clay or organic *(use NRCS definitions)* YES points = 4 NO points = 0	0
D	D 1.3 Characteristics of persistent vegetation (emergent, shrub, and/or forest Cowardin class) Wetland has persistent, ungrazed, vegetation > = 95% of area points = 5 Wetland has persistent, ungrazed, vegetation > = 1/2 of area points = 3 Wetland has persistent, ungrazed vegetation > = 1/10 of area points = 1 Wetland has persistent, ungrazed vegetation <1/10 of area points = 0 Map of Cowardin vegetation classes	Figure 1 0 WETLAND in lawn area that is likely mowed.
D	D1.4 Characteristics of seasonal ponding or inundation. *This is the area of the wetland unit that is ponded for at least 2 months, but dries out sometime during the year. Do not count the area that is permanently ponded. Estimate area as the average condition 5 out of 10 yrs.* Area seasonally ponded is > ½ total area of wetland points = 4 Area seasonally ponded is > ¼ total area of wetland points = 2 Area seasonally ponded is < ¼ total area of wetland points = 0 Map of Hydroperiods	Figure 1 0
D	**Total for D 1** *Add the points in the boxes above*	3
D	**D 2. Does the wetland unit have the opportunity to improve water quality?** Answer YES if you know or believe there are pollutants in groundwater or surface water coming into the wetland that would otherwise reduce water quality in streams, lakes or groundwater downgradient from the wetland. *Note which of the following conditions provide the sources of pollutants. A unit may have pollutants coming from several sources, but any single source would qualify as opportunity.* — Grazing in the wetland or within 150 ft — Untreated stormwater discharges to wetland — Tilled fields or orchards within 150 ft of wetland — A stream or culvert discharges into wetland that drains developed areas, residential areas, farmed fields, roads, or clear-cut logging X Residential, urban areas, golf courses are within 150 ft of wetland — Wetland is fed by groundwater high in phosphorus or nitrogen — Other_____ (YES) multiplier is 2 NO multiplier is 1	*(see p. 44)* multiplier 2
D	**TOTAL - Water Quality Functions** Multiply the score from D1 by D2 ***Add score to table on p. 1***	6

Wetland name or number W2

D	**Depressional and Flats Wetlands** HYDROLOGIC FUNCTIONS - Indicators that the wetland unit functions to reduce flooding and stream degradation	**Points** (only 1 score per box)
	D 3. Does the wetland unit have the potential to reduce flooding and erosion?	*(see p.46)*
D	D 3.1 Characteristics of surface water flows out of the wetland unit Unit is a depression with no surface water leaving it (no outlet) points = 3 Unit has an intermittently flowing, OR highly constricted permanently flowing outlet points = 2 Unit is a "flat" depression (Q. 7 on key), or in the Flats class, with permanent surface outflow **and no obvious natural outlet** and/or outlet is a man-made ditch points = 1 *(If ditch is not permanently flowing treat unit as "intermittently flowing")* Unit has an unconstricted, or slightly constricted, surface outlet (*permanently flowing*) points = 0	2
D	D 3.2 Depth of storage during wet periods *Estimate the height of ponding above the bottom of the outlet. For units with no outlet measure from the surface of permanent water or deepest part (if dry).* Marks of ponding are 3 ft or more above the surface or bottom of outlet points = 7 The wetland is a "headwater" wetland" points = 5 Marks of ponding between 2 ft to < 3 ft from surface or bottom of outlet points = 5 Marks are at least 0.5 ft to < 2 ft from surface or bottom of outlet points = 3 Unit is flat (yes to Q. 2 or Q. 7 on key) but has small depressions on the surface that trap water points = 1 Marks of ponding less than 0.5 ft points = 0	0
D	D 3.3 Contribution of wetland unit to storage in the watershed *Estimate the ratio of the area of upstream basin contributing surface water to the wetland to the area of the wetland unit itself.* The area of the basin is less than 10 times the area of unit points = 5 The area of the basin is 10 to 100 times the area of the unit points = 3 The area of the basin is more than 100 times the area of the unit points = 0 Entire unit is in the FLATS class points = 5	3
D	**Total for D 3** *Add the points in the boxes above*	5
D	**D 4. Does the wetland unit have the opportunity to reduce flooding and erosion?** Answer YES if the unit is in a location in the watershed where the flood storage, or reduction in water velocity, it provides helps protect downstream property and aquatic resources from flooding or excessive and/or erosive flows. Answer NO if the water coming into the wetland is controlled by a structure such as flood gate, tide gate, flap valve, reservoir etc. OR you estimate that more than 90% of the water in the wetland is from groundwater in areas where damaging groundwater flooding does not occur. *Note which of the following indicators of opportunity apply.* — Wetland is in a headwater of a river or stream that has flooding problems — Wetland drains to a river or stream that has flooding problems — Wetland has no outlet and impounds surface runoff water that might otherwise flow into a river or stream that has flooding problems — Other_____ **YES** multiplier is **2** (NO) multiplier is **1** wetland is so small that any trapped water would be insignificant.	*(see p. 49)* multiplier 1
D	**TOTAL - Hydrologic Functions** Multiply the score from D 3 by D 4 ***Add score to table on p. 1***	5

Wetland name or number W2

These questions apply to wetlands of all HGM classes. HABITAT FUNCTIONS - Indicators that unit functions to provide important habitat	Points (only 1 score per box)
H 1. Does the wetland unit have the potential to provide habitat for many species?	
H 1.1 Vegetation structure *(see p. 72)* *Check the types of vegetation classes present (as defined by Cowardin)- Size threshold for each class is ¼ acre or more than 10% of the area if unit is smaller than 2.5 acres.* ____Aquatic bed _X_Emergent plants ____Scrub/shrub (areas where shrubs have >30% cover) ____Forested (areas where trees have >30% cover) *If the unit has a forested class check if:* ____The forested class has 3 out of 5 strata (canopy, sub-canopy, shrubs, herbaceous, moss/ground-cover) that each cover 20% within the forested polygon *Add the number of vegetation structures that qualify. If you have:* 4 structures or more — points = 4 3 structures — points = 2 2 structures — points = 1 1 structure — points = 0 Map of Cowardin vegetation classes	Figure 1 0
H 1.2. Hydroperiods *(see p. 73)* *Check the types of water regimes (hydroperiods) present within the wetland. The water regime has to cover more than 10% of the wetland or ¼ acre to count. (see text for descriptions of hydroperiods)* ____Permanently flooded or inundated — 4 or more types present — points = 3 ____Seasonally flooded or inundated — 3 types present — points = 2 ____Occasionally flooded or inundated — 2 types present — point = 1 _X_Saturated only — 1 type present — points = 0 ____ Permanently flowing stream or river in, or adjacent to, the wetland ____ Seasonally flowing stream in, or adjacent to, the wetland ____ ***Lake-fringe wetland* = 2 points** ____***Freshwater tidal wetland* = 2 points** Map of hydroperiods	Figure 1 0
H 1.3. Richness of Plant Species *(see p. 75)* Count the number of plant species in the wetland that cover at least 10 ft^2. (*different patches of the same species can be combined to meet the size threshold)* *You do not have to name the species.* *Do not include Eurasian Milfoil, reed canarygrass, purple loosestrife, Canadian Thistle* If you counted: > 19 species — points = 2 5 - 19 species — points = 1 < 5 species — points = 0 *List species below if you want to:*	0

Total for page 0

Wetland name or number W2

H 1.4. Interspersion of habitats *(see p. 76)* Decide from the diagrams below whether interspersion between Cowardin vegetation classes (described in H 1.1), or the classes and unvegetated areas (can include open water or mudflats) is high, medium, low, or none. 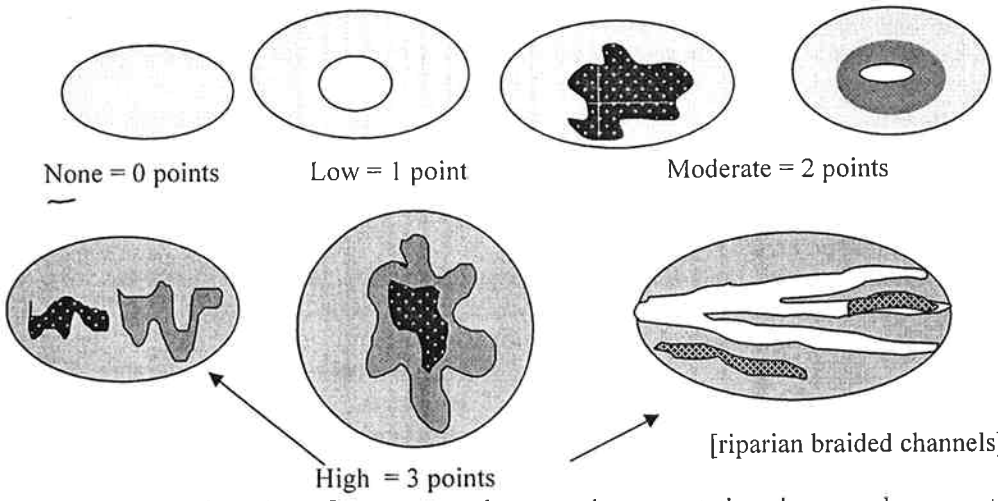 None = 0 points Low = 1 point Moderate = 2 points High = 3 points [riparian braided channels] NOTE: If you have four or more classes or three vegetation classes and open water the rating is always "high". Use map of Cowardin vegetation classes	Figure 1 0
H 1.5. Special Habitat Features: *(see p. 77)* *Check the habitat features that are present in the wetland. The number of checks is the number of points you put into the next column.* ____Large, downed, woody debris within the wetland (>4in. diameter and 6 ft long). ____Standing snags (diameter at the bottom > 4 inches) in the wetland ____Undercut banks are present for at least 6.6 ft (2m) and/or overhanging vegetation extends at least 3.3 ft (1m) over a stream (or ditch) in, or contiguous with the unit, for at least 33 ft (10m) ____Stable steep banks of fine material that might be used by beaver or muskrat for denning (>30degree slope) OR signs of recent beaver activity are present *(cut shrubs or trees that have not yet turned grey/brown)* ____At least ¼ acre of thin-stemmed persistent vegetation or woody branches are present in areas that are permanently or seasonally inundated. *(structures for egg-laying by amphibians)* ____ Invasive plants cover less than 25% of the wetland area in each stratum of plants *NOTE: The 20% stated in early printings of the manual on page 78 is an error.*	0
H 1. TOTAL Score - potential for providing habitat *Add the scores from H1.1, H1.2, H1.3, H1.4, H1.5*	0

Comments

Wetland name or number _____

H 2. Does the wetland unit have the opportunity to provide habitat for many species?	
H 2.1 Buffers *(see p. 80)* *Choose the description that best represents condition of buffer of wetland unit. The highest scoring criterion that applies to the wetland is to be used in the rating. See text for definition of "undisturbed."* — 100 m (330ft) of relatively undisturbed vegetated areas, rocky areas, or open water >95% of circumference. No structures are within the undisturbed part of buffer. (relatively undisturbed also means no-grazing, no landscaping, no daily human use) **Points = 5** — 100 m (330 ft) of relatively undisturbed vegetated areas, rocky areas, or open water > 50% circumference. **Points = 4** — 50 m (170ft) of relatively undisturbed vegetated areas, rocky areas, or open water >95% circumference. **Points = 4** — 100 m (330ft) of relatively undisturbed vegetated areas, rocky areas, or open water > 25% circumference, . **Points = 3** — 50 m (170ft) of relatively undisturbed vegetated areas, rocky areas, or open water for > 50% circumference. **Points = 3** **If buffer does not meet any of the criteria above** — No paved areas (except paved trails) or buildings within 25 m (80ft) of wetland > 95% circumference. Light to moderate grazing, or lawns are OK. **Points = 2** X No paved areas or buildings within 50m of wetland for >50% circumference. Light to moderate grazing, or lawns are OK. **Points = 2** — Heavy grazing in buffer. **Points = 1** — Vegetated buffers are <2m wide (6.6ft) for more than 95% of the circumference (e.g. tilled fields, paving, basalt bedrock extend to edge of wetland **Points = 0.** — Buffer does not meet any of the criteria above. **Points = 1** Aerial photo showing buffers	Figure 1 2
H 2.2 Corridors and Connections *(see p. 81)* H 2.2.1 Is the wetland part of a relatively undisturbed and unbroken vegetated corridor (either riparian or upland) that is at least 150 ft wide, has at least 30% cover of shrubs, forest or native undisturbed prairie, that connects to estuaries, other wetlands or undisturbed uplands that are at least 250 acres in size? (*dams in riparian corridors, heavily used gravel roads, paved roads, are considered breaks in the corridor*). YES = **4 points** (*go to H 2.3*) NO = go to H 2.2.2 H 2.2.2 Is the wetland part of a relatively undisturbed and unbroken vegetated corridor (either riparian or upland) that is at least 50ft wide, has at least 30% cover of shrubs or forest, and connects to estuaries, other wetlands or undisturbed uplands that are at least 25 acres in size? **OR** a **Lake-fringe** wetland, if it does not have an undisturbed corridor as in the question above? YES = **2 points** (*go to H 2.3*) NO = H 2.2.3 H 2.2.3 Is the wetland: within 5 mi (8km) of a brackish or salt water estuary OR within 3 mi of a large field or pasture (>40 acres) OR within 1 mi of a lake greater than 20 acres? YES = **1 point** NO = **0 points**	2

Total for page 4

Wetland name or number W2

H 2.3 Near or adjacent to other priority habitats listed by WDFW *(see p. 82)* Which of the following priority habitats are within 330ft (100m) of the wetland unit? *NOTE: the connections do not have to be relatively undisturbed.* *These are DFW definitions. Check with your local DFW biologist if there are any questions.* _X_ **Riparian**: The area adjacent to aquatic systems with flowing water that contains elements of both aquatic and terrestrial ecosystems which mutually influence each other. ____ **Aspen Stands:** Pure or mixed stands of aspen greater than 0.8 ha (2 acres). ____ **Cliffs:** Greater than 7.6 m (25 ft) high and occurring below 5000 ft. ____ **Old-growth forests:** (Old-growth west of Cascade crest) Stands of at least 2 tree species, forming a multi-layered canopy with occasional small openings; with at least 20 trees/ha (8 trees/acre) > 81 cm (32 in) dbh or > 200 years of age. ____ **Mature forests:** Stands with average diameters exceeding 53 cm (21 in) dbh; crown cover may be less that 100%; crown cover may be less that 100%; decay, decadence, numbers of snags, and quantity of large downed material is generally less than that found in old-growth; 80 - 200 years old west of the Cascade crest. ____ **Prairies:** Relatively undisturbed areas (as indicated by dominance of native plants) where grasses and/or forbs form the natural climax plant community. ____ **Talus:** Homogenous areas of rock rubble ranging in average size 0.15 - 2.0 m (0.5 - 6.5 ft), composed of basalt, andesite, and/or sedimentary rock, including riprap slides and mine tailings. May be associated with cliffs. ____ **Caves:** A naturally occurring cavity, recess, void, or system of interconnected passages ____ **Oregon white Oak:** Woodlands Stands of pure oak or oak/conifer associations where canopy coverage of the oak component of the stand is 25%. ____ **Urban Natural Open Space**: A priority species resides within or is adjacent to the open space and uses it for breeding and/or regular feeding; and/or the open space functions as a corridor connecting other *priority habitats*, especially those that would otherwise be isolated; and/or the open space is an isolated remnant of natural habitat larger than 4 ha (10 acres) and is surrounded by urban development. ____ **Estuary/Estuary-like:** Deepwater tidal habitats and adjacent tidal wetlands, usually semi-enclosed by land but with open, partly obstructed or sporadic access to the open ocean, and in which ocean water is at least occasionally diluted by freshwater runoff from the land. The salinity may be periodically increased above that of the open ocean by evaporation. Along some low-energy coastlines there is appreciable dilution of sea water. Estuarine habitat extends upstream and landward to where ocean-derived salts measure less than 0.5ppt. during the period of average annual low flow. Includes both estuaries and lagoons. ____ **Marine/Estuarine Shorelines**: Shorelines include the intertidal and subtidal zones of beaches, and may also include the backshore and adjacent components of the terrestrial landscape (e.g., cliffs, snags, mature trees, dunes, meadows) that are important to shoreline associated fish and wildlife and that contribute to shoreline function (e.g., sand/rock/log recruitment, nutrient contribution, erosion control). If wetland has **3 or more** priority habitats = **4 points** If wetland has **2** priority habitats = **3 points** If wetland has **1** priority habitat = **1 point** No habitats = 0 points *Note: All vegetated wetlands are by definition a priority habitat but are not included in this list. Nearby wetlands are addressed in question H 2.4)*	1

Wetland name or number W2

H 2.4 Wetland Landscape *(choose the **one** description of the landscape around the wetland that best fits)* ***(see p. 84)*** There are at least 3 other wetlands within ½ mile, and the connections between them are relatively undisturbed (light grazing between wetlands OK, as is lake shore with some boating, but connections should NOT be bisected by paved roads, fill, fields, or other development. points = 5 The wetland is Lake-fringe on a lake with little disturbance and there are 3 other lake-fringe wetlands within ½ mile points = 5 There are at least 3 other wetlands within ½ mile, BUT the connections between them are disturbed points = 3 The wetland is Lake-fringe on a lake **with** disturbance and there are 3 other lake-fringe wetland within ½ mile points = 3 There is at least 1 wetland within ½ mile. points = 2 There are no wetlands within ½ mile. points = 0	5
H 2. TOTAL Score - opportunity for providing habitat *Add the scores from H2.1,H2.2, H2.3, H2.4*	10
TOTAL for H 1 from page 14	0
Total Score for Habitat Functions – add the points for H 1, H 2 and record the result on p. 1	10

APPENDIX C

COOKE WETLAND FUNCTION ASSESSMENT

This page intentionally left blank.

McIntosh Parcel

2000 Wetland and Buffer Functions and Semi-quantitative Performance Assessment updated 8/04

Wetland # 1 Staff SASW Date 7/21/09

Location S 16 T 24N R 5E

N/A = Not Applicable, N/I = No information available

Table 1: Determining Wetland Size in Landscape Context

Attribute	Low (1 pt.)	Medium (2 pts.)	High (3 pts.)	Total
Absolute Size	<5 acres	5-10 acres	> 10 acres	1
Wetland Loss in Basin	< 20 %	20 – 60 %	>60 %	2
Size Relative to Other Wetlands in Basin (on NWI maps)	< 100% of average size	100 – 200 % of t average size	> 200% of average size	2
Buffer Size	< 75 feet	75 to 200 feet	> 200 feet	3
Buffer Condition	> 60% disturbed	20-60% disturbed	< 20% disturbed	3
Relative Size	If score is = 1.4 then give the question a 1 If score is 1.5 to 2.4 then give the question a 2 If score is 2.5 to =3 then give the question a 3			score/5 2.2=2

>0.73 acre

Function	Criteria		
	Group 1 1 pt	Group 2 2 pts	Group 3 3 pts
Flood/ Storm Water Control points 9 (max 15)	✓ size cumulative score (see Table 1) __ riverine, or shallow depression __ < 10 % forested cover ✓ unconstrained outlet ✓ located in lower 1/3 of the drainage 2	✓ size cumulative score (see Table 1) ✓ mid-sloped wetland __ 10 - 30 % forested cover __ semi-constrained outlet __ located in middle 1/3 of the drainage 4	__ size cumulative score (see Table 1) __ lake, depressions, headwaters, bogs ✓ > 30 % forested cover __ culvert/bermed outlet __ located in upper 1/3 of the drainage 3
Base Flow/ Ground Water Support points 8 (max 15)	__ Size cumulative score (see Table 1) __ riverine, or shallow depression ✓ located in lower 1/3 of the drainage __ temporarily flooded or saturated ✓ vegetation < 20 % OBL species 2	✓ Size cumulative score (see Table 1) ✓ mid-sloped wetland __ located in middle 1/3 of the drainage ✓ seasonally or semi-permanently flooded or saturated __ vegetation 20 to 40 % OBL species 6	__ Size cumulative score (see Table 1) __ lake,depressions, headwaters,bogs __ located in upper 1/3 of the drainage __ permanently flooded or saturated, or intermittently exposed __ vegetation > 40 % OBL species
Erosion/ Shoreline Protection points 6 (max 9)	✓ sparse grass/herbs or no veg along OHWM ✓ wetland extends < 30 m from OHWM ✓ <20 % shoreline developed 1	__ sparse wood or veg along OHWM ✓ wetland extends 30 - 60 m from OHWM __ 20 to 60% shoreline developed 2	✓ dense wood or veg along OHWM __wetland extends > 200 m from OHWM __ >60 % shoreline developed 3

2000 Wetland and Buffer Functions and Semi-quantitative Performance Assessment updated 8/04

Water Quality Improvement points 12 (max 15)	__ rapid flow through site __ < 50 % veg cover __ <20% of basin upstream from wetland is developed __ result from Table 2 ✓ Soil coarse -gravel, Sand, sandyloam	__ moderate flow through site __ 50 - 80 % cover __ 20 to 50% of basin upstream from wetland is developed ✓ result from Table 2 __ Soil organic mineral mix	✓ slow flow through site ✓ > 80 % veg cover ✓ > 50% of basin upstream from wetland is developed __ result from Table 2 __ Soil heavy organic muck and peat
	1	2	9

Wetland # 1 Staff SASW Date 7/21/09

Table 2: Overland Flow Contained in Wetland

Attribute	Low (1 pt.)	Medium (2 pts.)	High (3 pts.)	Total
Configuration	Plate-shaped	Shallow bowl-shaped	Deep Bowl-shaped	1
Drainage Basin Size	< 2 acres	2-5 acres	> 5 acres	3
Outlet	Unconstrained	Semi-constrained	Constrained	1
Input	Groundwater only	Surface flow and groundwater	Surface flow	2
Basin Condition	< 20% impervious	20-40 % impervious	>40% impervious	2
Flow Contained				score/5

$\frac{8}{5} = 1.6 = 2$

Natural Biological Support points 24 (max 36)	__ size cumulative score (see Table 1) __ low connectivity to veg'd buffers __ ag land, low veg structure ✓ seasonal surface water __ one habitat type PAB POW PEM PSS PFO EST __ low plant diversity (< 6 species) __ > 50 % invasive species __ low organic accumulation ✓ low organic export ✓ few habitat features __ buffers very disturbed __ isolated from upland habitats	✓ size cumulative score (see Table 1) __ mod connectivity to veg'd buffers ✓ 2 layers of vegetation __ permanent surface water ✓ two habitat types PAB POW PEM PSS PFO EST ✓ moderate plant diversity (7-15 spp) __ 10 to 50 % invasive species ✓ moderate organic accumulation __ moderate organic export __ some habitat features ✓ buffers slightly disturbed __ partially connected to upland habitats	__ size cumulative score (see Table 1) ✓ high connectivity to veg'd buffers __ high veg structure __ open water pools through summer __ ≥ 3 habitat types PAB POW PEM PSS PFO EST __ high plant diversity (> 15 spp) ✓ < 10% invasive species __ high organic accumulation __ high organic export __ many habitat features ✓ buffers not disturbed ✓ well connected to upland habitats
	3	12	9
Overall Habitat Functions points 7 (max 9)	__ size cumulative score (see Table 1) __ low habitat diversity __ low sanctuary or refuge	✓ size cumulative score (see Table 1) ✓ moderate habitat diversity __ moderate sanctuary or refuge	size cumulative score (see Table 1) __ high habitat diversity ✓ high sanctuary or refuge
		4	3

2000 Wetland and Buffer Functions and Semi-quantitative Performance Assessment updated 8/04

Specific Habitat Functions points 10 (max 15)	___ low invertebrate habitat ___ low amphibian habitat ✓ low fish habitat ___ low mammal habitat ___ low bird habitat 1	✓ moderate invertebrate habitat ✓ moderate amphibian habitat ___ moderate fish habitat ✓ moderate mammal habitat ___ moderate bird habitat 6	___ high invertebrate habitat ___ high amphibian habitat ___ high fish habitat ___ high mammal habitat ✓ high bird habitat 3

1 Wetland# 1 Staff SASW Date 7/21/09

Cultural/ Socioeconomic points 8 (max 18)	✓ low educational opportunities ___ low aesthetic value ✓ lacks commercial fisheries, agriculture, renewable resources ✓ lacks historical or archeological resources ___ lacks passive and active recreational opportunities ✓ privately owned 4	___ moderate educational opportunities ✓ moderate /aesthetic value ___ moderate commercial fisheries, agriculture, renewable resources ___ historical or archeological site ✓ some passive and active recreational opportunities ___ privately owned, some public access 4	___ high educational opportunities ___ high aesthetic value ___ high commercial fisheries, agriculture, renewable resources ___ important historical or archeological site ___ many passive and active recreational opportunities ___ unrestricted public access

Dominant Vegetation:

Wildlife:

Notes:

McIntosh Parcel

2000 Wetland and Buffer Functions and Semi-quantitative Performance Assessment updated 8/04

Wetland # 2 Staff SASW Date 7/21/09

Location S 16 T 24N R 5E

N/A = Not Applicable, N/I = No information available

Table 1: Determining Wetland Size in Landscape Context

Attribute	Low (1 pt.)	Medium (2 pts.)	High (3 pts.)	Total
Absolute Size	<5 acres	5-10 acres	> 10 acres	1
Wetland Loss in Basin	< 20 %	20 – 60 %	>60 %	2
Size Relative to Other Wetlands in Basin (on NWI maps)	< 100% of average size	100 – 200 % of t average size	> 200% of average size	1
Buffer Size	< 75 feet	75 to 200 feet	> 200 feet	1
Buffer Condition	> 60% disturbed	20-60% disturbed	< 20% disturbed	1
Relative Size	If score is = 1.4 then give the question a 1 If score is 1.5 to 2.4 then give the question a 2 If score is 2.5 to =3 then give the question a 3			score/5 1

254 SF

Function	Criteria		
	Group 1 1 pt	Group 2 2 pts	Group 3 3 pts
Flood/ Storm Water Control points 5 (max 15)	✓ size cumulative score (see Table 1) ✓ riverine, or shallow depression ✓ < 10 % forested cover ✓ unconstrained outlet ✓ located in lower 1/3 of the drainage 5	✓ size cumulative score (see Table 1) ___ mid-sloped wetland ___ 10 - 30 % forested cover ___ semi-constrained outlet ___ located in middle 1/3 of the drainage	___ size cumulative score (see Table 1) ___ lake, depressions, headwaters, bogs ___ > 30 % forested cover ___ culvert/bermed outlet ___ located in upper 1/3 of the drainage
Base Flow/ Ground Water Support points 5 (max 15)	✓ Size cumulative score (see Table 1) ✓ riverine, or shallow depression ✓ located in lower 1/3 of the drainage ✓ temporarily flooded or saturated ✓ vegetation < 20 % OBL species	___ Size cumulative score (see Table 1) ___ mid-sloped wetland ___ located in middle 1/3 of the drainage ___ seasonally or semi-permanently flooded or saturated ___ vegetation 20 to 40 % OBL species	___ Size cumulative score (see Table 1) ___ lake,depressions, headwaters,bogs ___ located in upper 1/3 of the drainage ___ permanently flooded or saturated, or intermittently exposed ___ vegetation > 40 % OBL species
Erosion/ Shoreline Protection points 3 (max 9)	✓ sparse grass/herbs or no veg along OHWM ✓ wetland extends < 30 m from OHWM ✓ <20 % shoreline developed	___ sparse wood or veg along OHWM ___ wetland extends 30 - 60 m from OHWM ___ 20 to 60% shoreline developed	___ dense wood or veg along OHWM ___wetland extends > 200 m from OHWM ___ >60 % shoreline developed

2000 Wetland and Buffer Functions and Semi-quantitative Performance Assessment updated 8/04

Water Quality Improvement points 12 (max 15)	___ rapid flow through site ___ < 50 % veg cover ___ <20% of basin upstream from wetland is developed ___ result from Table 2 ✓ Soil coarse -gravel, Sand, sandyloam 1	___ moderate flow through site ___ 50 - 80 % cover ___ 20 to 50% of basin upstream from wetland is developed ✓ result from Table 2 ___ Soil organic mineral mix 2	✓ slow flow through site ✓ > 80 % veg cover ✓ > 50% of basin upstream from wetland is developed ___ result from Table 2 ___ Soil heavy organic muck and peat 9

Wetland # 2 Staff SASW Date 7/21/09

Table 2: Overland Flow Contained in Wetland

Attribute	Low (1 pt.)	Medium (2 pts.)	High (3 pts.)	Total
Configuration	Plate-shaped	Shallow bowl-shaped	Deep Bowl-shaped	2
Drainage Basin Size	< 2 acres	2-5 acres	> 5 acres	3
Outlet	Unconstrained	Semi-constrained	Constrained	1
Input	Groundwater only	Surface flow and groundwater	Surface flow	1
Basin Condition	< 20% impervious	20-40 % impervious	>40% impervious	2
Flow Contained				score/5

$\frac{9}{5} = 1.8 = 2$

Natural Biological Support points 17 (max 36)	✓ size cumulative score (see Table 1) ___ low connectivity to veg'd buffers ✓ ag land, low veg structure ✓ seasonal surface water ✓ one habitat type PAB POW PEM PSS PFO EST ✓ low plant diversity (< 6 species) ✓ > 50 % invasive species ✓ low organic accumulation ✓ low organic export ✓ few habitat features ___ buffers very disturbed ___ isolated from upland habitats 9	___ size cumulative score (see Table 1) ___ mod connectivity to veg'd buffers ___ 2 layers of vegetation ___ permanent surface water ___ two habitat types PAB POW PEM PSS PFO EST ___ moderate plant diversity (7-15 spp) ___ 10 to 50 % invasive species ___ moderate organic accumulation ___ moderate organic export ___ some habitat features ✓ buffers slightly disturbed ___ partially connected to upland habitats 2	___ size cumulative score (see Table 1) ✓ high connectivity to veg'd buffers ___ high veg structure ___ open water pools through summer ___ ≥ 3 habitat types PAB POW PEM PSS PFO EST ___ high plant diversity (> 15 spp) ___ < 10% invasive species ___ high organic accumulation ___ high organic export ___ many habitat features ___ buffers not disturbed ✓ well connected to upland habitats 6
Overall Habitat Functions points 3 (max 9)	✓ size cumulative score (see Table 1) ✓ low habitat diversity ✓ low sanctuary or refuge	___ size cumulative score (see Table 1) ___ moderate habitat diversity ___ moderate sanctuary or refuge	_size cumulative score (see Table 1) ___ high habitat diversity ___ high sanctuary or refuge

2000 Wetland and Buffer Functions and Semi-quantitative Performance Assessment updated 8/04

Specific Habitat Functions points 5 (max 15)	✓ low invertebrate habitat ✓ low amphibian habitat ✓ low fish habitat ✓ low mammal habitat ✓ low bird habitat	___ moderate invertebrate habitat ___ moderate amphibian habitat ___ moderate fish habitat ___ moderate mammal habitat ___ moderate bird habitat	___ high invertebrate habitat ___ high amphibian habitat ___ high fish habitat ___ high mammal habitat ___ high bird habitat

l Wetland# 2 Staff SASW Date 7/21/09

Cultural/ Socioeconomic points 6 (max 18)	✓ low educational opportunities ✓ low aesthetic value ✓ lacks commercial fisheries, agriculture, renewable resources ✓ lacks historical or archeological resources ✓ lacks passive and active recreational opportunities ✓ privately owned	___ moderate educational opportunities ___ moderate /aesthetic value ___ moderate commercial fisheries, agriculture, renewable resources ___ historical or archeological site ___ some passive and active recreational opportunities ___ privately owned, some public access	___ high educational opportunities ___ high aesthetic value ___ high commercial fisheries, agriculture, renewable resources ___ important historical or archeological site ___ many passive and active recreational opportunities ___ unrestricted public access

Dominant Vegetation:

Wildlife:

Notes:

APPENDIX D

WOLMAN PEBBLE COUNT DATA

This page intentionally left blank.

Pebble Count Worksheet

Particle Size (mm)	% finer than	Total Count
< 2	30%	35
2 - 4	35%	5
4 - 6	37%	3
6 - 8	38%	1
8 - 12	44%	7
12 - 16	48%	4
16 - 24	56%	9
24 - 32	67%	13
32 - 48	76%	10
48 - 64	83%	9
64 - 96	94%	12
96 - 128	98%	5
128 - 192	99%	1
192 - 256	99%	0
256 - 384	100%	1
384 - 512	100%	0
512 - 1024	100%	0
1024-2048	100%	0
2048-4096	100%	0
	Total #	115

COMMENTS: # of transects 5

STREAM NAME: Coal Creek
ID NUMBER: NSO 19 R10
DATE: 5/28/2009
CREW: scott and eve

Particle Size Distribution (mm)	Fines <6 mm	D35	D50	D84	D95
	37%	**4.1**	**17.9**	**65.3**	**103.2**

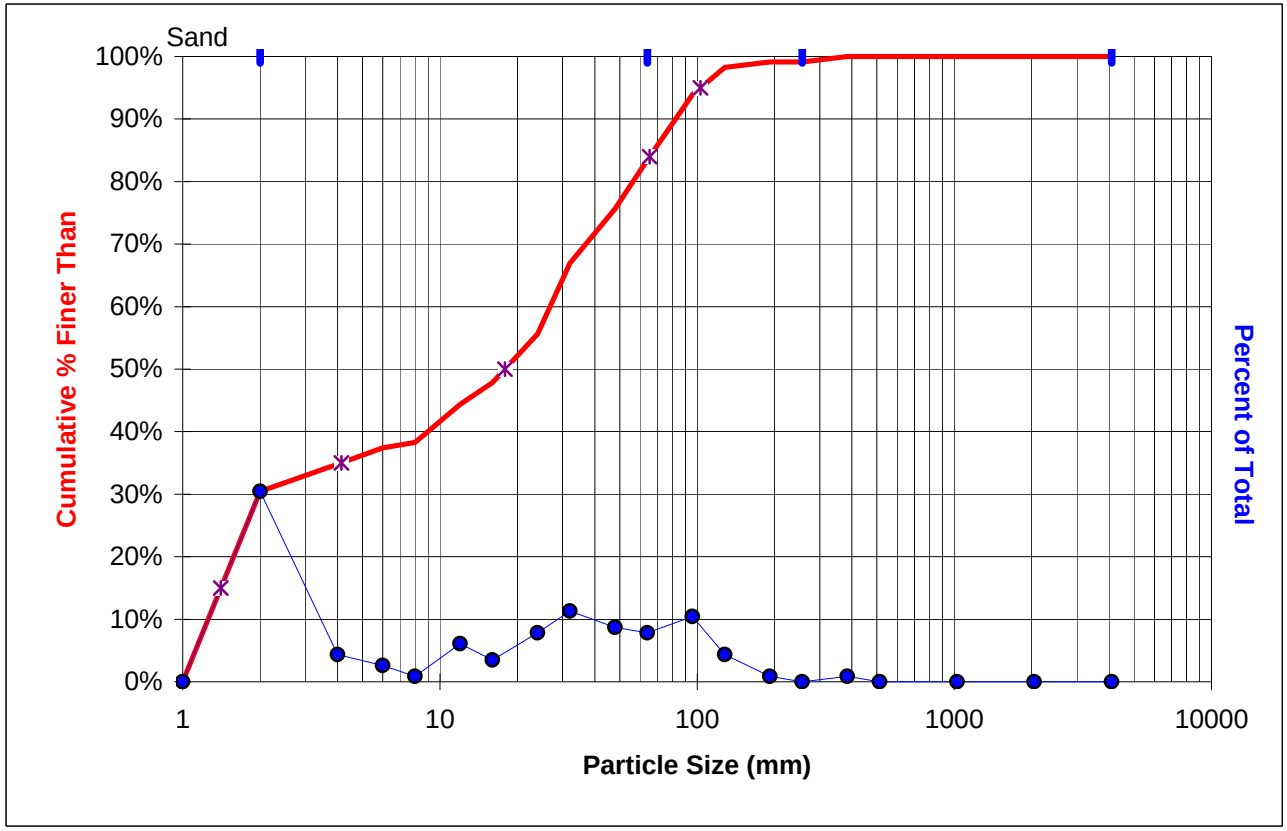

FILENAME: upper riffle1 ENTERED: 8/10/2009

Pebble Count Worksheet

Particle Size (mm)	% finer than	Total Count
< 2	25%	24
2 - 4	25%	
4 - 6	26%	1
6 - 8	27%	1
8 - 12	32%	5
12 - 16	34%	2
16 - 24	38%	4
24 - 32	43%	5
32 - 48	54%	10
48 - 64	61%	7
64 - 96	74%	13
96 - 128	87%	12
128 - 192	96%	9
192 - 256	100%	4
256 - 384	100%	0
384 - 512	100%	0
512 - 1024	100%	0
1024-2048	100%	0
2048-4096	100%	0
	Total #	97

COMMENTS:# of transects 5

STREAM NAME: Coal Creek
ID NUMBER: NSO 1 R1
DATE: 5/28/2009
CREW: scott and eve

Particle Size Distribution (mm)	Fines <6 mm	D35	D50	D84	D95
	26%	**17.6**	**41.6**	**120.5**	**184.8**

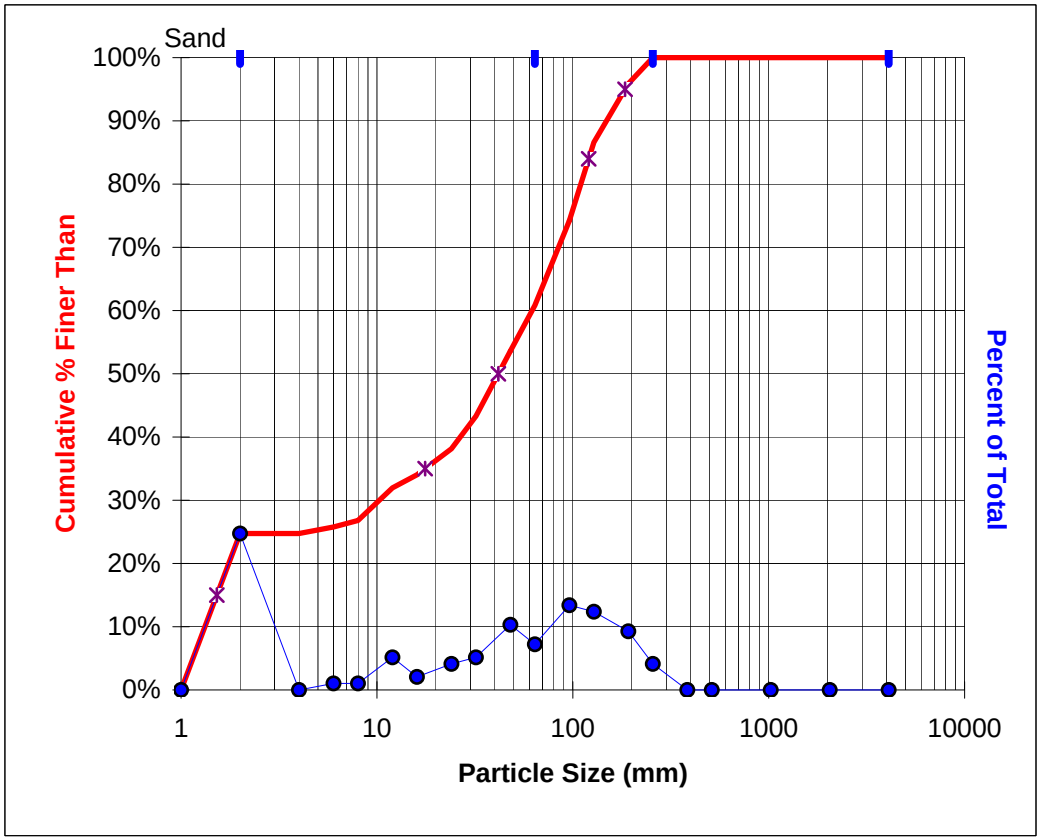

FILENAME: lower riffle.xls ENTERED: 8/10/2009

APPENDIX E

MITIGATION PLAN

This page intentionally left blank.

APPENDIX F

FISH SALVAGE PLAN

This page intentionally left blank.

FISH SALVAGE PLAN

CITY OF BELLEVUE

COAL CREEK OFF-LINE SEDMENT POND

Fish salvage is required during both construction and maintenance. The individuals conducting fish salvage must contact the WDFW local area habitat biologist at least one week prior to conducting fish salvage, have a valid WDFW Scientific Collection Permit, and the crew leader will have at least 100 hours of experience electrofishing and will have attended the Backpack Electrofishing and Fish Handling Techniques training offered by the Northwest Environmental Training Center. The following is the proper sequence for fish exclusion:

1. Isolate the project area (install block nets).
2. Install minnow traps and check daily.
3. Dip or seine net exclusion.
4. Electrofish project area.
5. Salvage during dewatering.
6. Inspect dewatered area for any remaining fish or other aquatic resources.
7. Identify and release fish.
8. Inspect work area daily.
9. Remove block nets.

Isolate the Project Areas. Project areas are defined as the inlet and outlet of the side channel, and location of the constructed log jam. Block nets will be installed at the upstream and downstream project limits to isolate each project area to prevent fish and other aquatic organisms from moving into the work area. Block net mesh size, length, type of material, and depth will vary based on site conditions. Generally, block net mesh size is the same as seine material (9.5 mm stretched). Block nets will be installed securely along both banks and in channel to prevent failure during unforeseen rain events or debris accumulation. Some locations may require additional block net support such as galvanized hardware cloth, additional stakes, or metal fence posts. Block nets will be left in place throughout the construction period, and will be checked daily for leaf and debris buildup to ensure proper function.

A biologist will be designated to monitor and maintain the nets. The flow rate in the stream and the amount of leaves and other debris collected on the net will determine how often the nets need to be checked. Once the stream reach has been isolated, all attempts to remove fish and other aquatic life will be made with the least amount of handling.

Install and Check Minnow Traps. The use of minnow traps is the first level of fish removal as it is the least detrimental, but will not capture all fish within the project areas. Minnow traps will be deployed in the deepest areas, and baited with canned salmon. Each minnow trap will be inspected daily. Each minnow trap will be tagged with waterproof labels that list the project proponent, project biologist, contact information including phone number, and valid scientific collection permit number. Minnow traps will be deployed for a minimum of two consecutive days.

Electrofishing. Review the Scientific Collection Permit and Research Study Plan. Contact the WDFW local area habitat biologist at least one-week prior to fish salvage. Electrofishing of the project areas will commence one day prior to dewatering, after minnow traps have been removed. Electrofishing will occur while moving upstream and will continue until no more fish are captured during three consecutive passes. The electrofisher will be set to use direct current at the lowest voltage and pulse rate needed to effectively capture fish based on water temperature and conductivity. No electrofishing will occur when visibility is less than one foot or water temperature is below 4 degrees Celsius or above 18 degrees Celsius. Conductivity and stream temperature will be measured and recorded prior to electrofishing. Conductivity measurements will be used to set initial electrofisher settings, while stream temperature will be measured hourly.

Salvage during Dewatering. A biologist will be present during dewatering and use dip nets to remove any remaining aquatic vertebrates observed stranded during dewatering. The biologist will scour the project area after dewatering and salvage all remaining aquatic vertebrates. Salvage during dewatering is the final action designed to ensure most, if not all, aquatic vertebrates are safely removed from the dewatered project areas prior to construction of the inlet, outlet, and installation of the constructed log jam.

Fish Release. Regardless of capture technique, fish should be handled properly. A healthy environment for the stressed fish must be provided and all fish should be released as soon as possible. There should not be overcrowding in the buckets and holding time should be minimized. Large fish will be kept separated from smaller prey-sized fish to avoid predation during containment. Water to water transfers, the use of shaded or dark containers, and supplemental oxygen shall be used during fish handling operations. Aquatic vertebrates shall be released to a location upstream of the project reach and block net. They will be released into an area that provides the best available habitat. Several buckets will be available with clean stream water to hold the fish until counting and release can be completed. These buckets will be equipped with air pumps to maintain proper dissolved oxygen levels. Frequent monitoring of bucket temperature and well being of the specimens should be done to assure that all specimens will be released unharmed. Perforated buckets may also be used and placed upstream of the block nets until the fish are counted.

Remove Block Nets. Block nets will be removed, following completion of the activity, as soon as the work area is stabilized. Block nets will not be left in place for an extended amount of time. Block nets will be removed with care and checked for aquatic vertebrates.

Documentation. The results of the fish capture effort(s) will be presented to the City of Bellevue, and WDFW via annual reporting requirements associated with the Scientific Collection Permit.

Fish Entrapment Monitoring. The purpose of monitoring for possible fish entrapment through the project site is to safeguard against fish becoming trapped in the off-line sediment channel after major stormevents. Should fish become stranded within the off-line sediment pond they will be immediately captured and released into Coal Creek.

APPENDIX G

TURBIDITY MONITORING PLAN

This page intentionally left blank.

TURBIDITY MONITORING PLAN

CITY OF BELLEVUE

COAL CREEK OFF-LINE SEDMENT POND

The following Turbidity Monitoring Plan has been developed at the request of the City of Bellevue for issuance of a Clearing and Grading Permit. The purpose of this plan is to provide the framework for performance monitoring to assure compliance with State Surface Water Quality Standards (WAC 173.201 A).

Monitoring Standards. Since the background turbidity will likely be 50 NTUs or less and stream flow will be 10 cubic feet per second (cfs) or less during construction and maintenance, the project site must not increase turbidity downstream of the project site by 5 NTU over background levels past the appropriate mixing zone, which in this case is 100 feet. However, should a major storm event occur during construction or any other non-project related activity that results in a background turbidity measurement in excess of 50 NTUs, the benchmark not to be exceeded will be 10 percent above background turbidity as measured upstream of the project site.

Monitoring Sites. Since the appropriate mixing zone in this case is 100 feet, the downstream limits of compliance are 100 feet downstream of the proposed inlet and 100 feet downstream of the proposed outlet. Background turbidity will be determined at the beginning of each monitoring event upstream of the project site.

Monitoring Frequency. Since construction will occur during the dry season and within the designated WDFW in-water work window, sampling will occur at least once a week. However, monitoring will also occur during/after any significant rainfall events should one occur during construction. A significant rainfall event shall be defined as a storm event greater than 0.5 inch of rainfall within 24 hours, or as requested by the City of Bellevue. The station of record for rainfall measurements will be the National Oceanic and Atmospheric Administration (NOAA) weather report for Bellevue, Washington. Additional sampling will be required if the turbidity results are high or turbid water is observed. Any violation of the aforementioned standards will trigger daily monitoring until standards are achieved. During each monitoring event, a minimum of three measurements will be taken to determine background turbidity at the upstream site and compliance at the downstream site.

Monitoring Reporting. The results of turbidity monitoring will be recorded on a City of Bellevue Turbidity Monitoring Data Sheet. The City of Bellevue Clearing and Grading Inspector should be immediately contacted by telephone if the standard is exceeded. Hardcopies of this form should also be faxed on each day of monitoring to the City of Bellevue Clearing and Grading Inspector (425.452.7930). If turbidity standards are not met, the construction contractor must also be notified immediately (follow-up with a written notification) and all work will stop until corrective measures have resulted in satisfactory NTU measurements at the downstream monitoring site. All corrective actions and outcome of additional sampling must be recorded on the data sheet. Once the project has been completed, the turbidity monitor will provide a letter report to the Clearing and Grading Inspector outlining the results of the monitoring, which will include copies of the turbidity monitoring data sheets.

Turbidity Monitoring Data Sheet

Project Name & Permit Number

Site Address

Monitor Name, Company, Phone Number

Date & Time of Sample Baseline Turbidity NTU

Weather Conditions

Upstream Location / Reading (NTU)	Downstream Location / Reading (NTU)	Turbidity Increase (Downstream - Upstream) (NTU)	Allowable Turbidity Increase (NTU)	Turbidity Increase Above Standard? (Y/N)[1]	Contractor Notified of results? (Y/N)

Corrective Measures Taken By Contractor (if turbidity increase is above standard):

Other Comments:

(1) Clearing and Grading Inspector must be notified by telephone if standard is exceeded.

Fax to the Clearing and Grading Inspector at (425) 452-7930

BIOLOGICAL ASSESSMENT

CITY OF BELLEVUE
LOWER COAL CREEK
OFF-LINE SEDIMENT POND

King County, Washington

RWBA0000-0010

Prepared for:

CITY OF BELLEVUE
Department of Planning and Community Development
450 110th Avenue NE
P.O. Box 90012
Bellevue, WA 98009

Prepared by:

DAVID EVANS AND ASSOCIATES, INC.
415 118th Avenue SE
Bellevue, WA 98005
Phone: 425.519.6500
Fax: 425.519.5361

August 2009

BIOLOGICAL ASSESSMENT

CITY OF BELLEVUE
LOWER COAL CREEK
OFF-LINE SEDIMENT POND

King County, Washington

RWBA0000-0010

Prepared for:

CITY OF BELLEVUE
Department of Planning and Community Development
450 110th Avenue NE
P.O. Box 90012
Bellevue, WA 98009

Prepared by:

Scott Swarts
Senior Fish and Wildlife Biologist

DAVID EVANS AND ASSOCIATES, INC.
415 118th Avenue SE
Bellevue, WA 98005

August 2009

TABLE OF CONTENTS

1.0 INTRODUCTION 1

1.1 Studies and Coordination 8

1.2 Field Investigation 8

2.0 PROJECT DESCRIPTION 8

3.0 PROJECT AREA AND ACTION AREA DEFINITION 13

3.1 Project Area 13

3.2 Action Area 13

4.0 ENVIRONMENTAL BASELINE 14

4.1 Puget Sound Chinook Salmon 28

4.2 Bull Trout 30

4.3 Puget Sound Steelhead Trout 31

5.0 ESSENTIAL FISH HABITAT 32

6.0 IMPACT MINIMIZATION MEASURES 32

6.1 Conservation and Performance Measures 33

7.0 EFFECTS ANALYSIS 34

7.1 Effects to Salmonid Baseline Habitat Conditions 35

7.2 Turbidity and Sedimentation Impacts 37

7.3 Chinook Salmon Impacts 37

7.4 Steelhead Trout Impacts 38

7.5 Bull Trout Impacts 38

7.6 Interrelated and Interdependent Actions 38

8.0 DETERMINATION OF EFFECTS 39

8.1 Chinook Salmon 39

8.2 Chinook Salmon Designated Critical Habitat 39

8.3 Bull Trout 39

8.4 Bull Trout Critical Habitat 40

8.5 Puget Sound Steelhead Trout 40

8.6 Essential Fish Habitat 40

9.0 REFERENCES 41

LIST OF TABLES

Table 1: NMFS and USFWS Species Potentially in the Action Area 2
Table 2: Impact Summary.....12
Table 3: Stream Survey Summary 23
Table 4: Coal Creek Fish Use Summary.....24
Table 5: Coal Creek 2008 Water Quality Assessment.....26
Table 6: Matrix of Pathways and Indicators Summary 27
Table 7: Wetland Summary 27
Table 8: Salmonid Habitat Project Effects Matrix.....35

LIST OF FIGURES

Figure 1. Vicinity Map.....3
Figure 2. Project and Action Area Map 4
Figure 3. Aerial Photo.....5
Figure 4. WDFW Stream Map.....6
Figure 5. Delta Comparison Photos 7
Figure 6. Site Photos 15

APPENDICES

Appendix A: NMFS In-line Pond Informal Consultation Letter
Appendix B: NMFS Species List
Appendix C: USFWS Species List
Appendix D: Design and Mitigation Drawings
Appendix E: Fish Salvage Plan

ABBREVIATIONS AND ACRONYMS

ºC	degrees Celsius
°F	degrees Fahrenheit
ASL	above sea level
BA	Biological Assessment
BFW	bankful width
BMPs	best management practices
CESCL	Certified Erosion and Sediment Control Lead
cfs	cubic feet per second
Corps	U.S. Army Corps of Engineers
dbh	diameter at breast height
DEA	David Evans and Associates, Inc.
Ecology	Washington State Department of Ecology
EFH	essential fish habitat
EIS	Environmental Impact Statement
EPA	Environmental Protection Agency
ESA	Endangered Species Act
HPA	Hydraulic Project Approval
HUC	Hydrologic Unit Code
I-405	Interstate 405
KCWLRD	King County Water and Land Resources Division
LWD	large woody debris
mm	millimeter
NMFS	National Marine Fisheries Service
NOAA	National Oceanic and Atmospheric Administration
NSO	natural sequence order
NWI	National Wetlands Inventory
OHWM	ordinary high water mark
PCE	Primary Constituent Element
PFMC	Pacific Fisheries Management Council
PHS	Priority Habitats and Species
RM	river mile
TESC	Temporary Erosion and Sediment Control
USFS	U.S. Forest Service
USFWS	U.S. Fish and Wildlife Service
USGS	U.S. Geological Survey
WDFW	Washington Department of Fish and Wildlife
WDNR	Washington State Department of Natural Resources
WRIA	Water Resource Inventory Area
WSDOT	Washington State Department of Transportation

This page intentionally left blank.

1.0 INTRODUCTION

At the request of the City of Bellevue, David Evans and Associates, Inc. (DEA) prepared this Biological Assessment (BA) for a proposed off-line sediment pond adjacent to Coal Creek. This proposed project is in lieu of an in-line sediment pond that previously went through Endangered Species Act (ESA) Section 7 Informal Consultation process (NMFS Tracking No.: 2007/05968). The National Marine Fisheries Service (NMFS) previously determined that the in-line sediment pond "may affect, not likely to adversely affect" Puget Sound Chinook salmon and steelhead trout, and would have "no effect" on critical habitat for Puget Sound Chinook salmon (**Appendix A**).

The construction of this off-line sediment pond requires a federal permit from the U.S. Army Corps of Engineers (Corps). The previous project required obtaining an Individual Permit. However, based on the design of the off-line pond and minor overall disturbance, the proposed off-line sediment pond will likely require a Nationwide Permit. This proposed off-line sediment pond has eliminated or significantly reduced all primary concerns previously identified by the regulatory agencies.

The project site is located within the City of Bellevue, King County, Washington (Section 16, Township 24 north, Range 05 east, W.M.) (**Figures 1 and 2**). The proposed off-line sediment pond would be located on lower Coal Creek east of Interstate 405 (I-405), south/southwest of Coal Creek Parkway, at approximate river mile (RM) 1.4. Coal Creek is tributary to Lake Washington. The project site is in Water Resource Inventory Area (WRIA) 8: Cedar – Sammamish Basin. More specifically, the project site is within the Coal Creek Watershed, 6th Field Hydrologic Unit Code (HUC) 171100120302, while the approximate latitude and longitude of the project area is 47.56254° N by 122.17125° W at an elevation of approximately 111 feet above sea level.

The general project area is located on the McIntosh parcels (Parcel No. 1624059084 and 1624059190), which were recently purchased by the City of Bellevue and will become part of Coal Creek Park. Coal Creek Park is a 550-acre park that is owned by the City of Bellevue. This park is largely undeveloped and consists of third-growth forest in a steep ravine with approximately three miles of unpaved trails. The project site is located at the end of 125th Avenue SE and currently contains a single-family home and is bisected by Coal Creek (**Figures 3 and 4**).

The City of Bellevue has been mandated per a legal settlement agreement to undertake a number of projects in order to reduce the amount of sediment that accumulates at the delta of Coal Creek at Newport Shores. Aerial photographs of the delta of both Coal Creek and May Creek are shown for comparison purposes in **Figure 5**. One of the required projects is a sediment pond with the capacity to capture 1,500 cubic yards of sediment per year. This project is part of a larger effort to control sediment erosion, transport, and deposition resulting from past coal mine activities. This effort, referred to as the Coal Creek Stabilization Program, has the following primary objectives (Tetra Tech/KCM 2005):

- Reduce sediment supply to Coal Creek and Lake Washington to a level expected for an undisturbed or natural condition.
- Stabilize the Coal Creek system to ensure the success of future restoration efforts.

- Minimize the potential for flooding that may be associated with excessive sedimentation.
- Improve water quality by minimizing erosion and sediment transport.

Species under NMFS jurisdiction (**Appendix B**) potentially occurring in the action area include Puget Sound Chinook salmon (*Oncorhynchus tshawytscha*) and Puget Sound steelhead trout (*O. mykiss*). In addition, DEA investigated the potential presence of Chinook salmon designated critical habitat, and essential fish habitat (EFH) for Chinook, coho, and pink (*O. gorbuscha*) salmon in the action area.

Eight listed species are identified on the U.S. Fish and Wildlife Service (USFWS) county-wide listings for King County (**Appendix C**), including: Coastal/Puget Sound bull trout (*Salvelinus confluentus*), marbled murrelet (*Brachyramphus marmoratus marmoratus*), northern spotted owl (*Strix occidentalis caurina*), gray wolf (*Canis lupus*), grizzly bear (*Ursus arctos*), Canada lynx (*Lynx canadensis*), marsh sandwort (*Arenaria paludicola*), and golden paintbrush (*Castilleja levisecta*). Furthermore, critical habitat for the northern spotted owl, marbled murrelet, and bull trout occurs in King County.

Spotted owl and marbled murrelet suitable habitat and critical habitat do not occur in the action area. Therefore, this project will have "no effect" on spotted owl and marbled murrelet or their designated critical habitat. These species and their critical habitat will not be addressed further in the BA. Due to the project area being located within the City of Bellevue, grizzly bears, gray wolves, and Canada lynx do not occur in the action area. Therefore, the project will have "no effect" on grizzly bears, gray wolves, or Canada lynx, and these species will not be addressed further in the BA.

Marsh sandwort is assumed extirpated from the State of Washington and has not been documented since 1896 when it was collected from "prairies" near Tacoma (USFWS 1998a). Golden paintbrush typically occurs in prairie/grassland habitat on gravelly, glacial outwash. It is known from nine extant populations in Washington (USFWS 2000). Prairie habitat does not occur in the action area. Therefore, the project will have "no effect" on marsh sandwort or golden paintbrush, and these species will not be addressed further in the BA. All species addressed in this BA are outlined in **Table 1**.

Table 1: NMFS and USFWS Species Potentially in the Action Area

Species	Scientific Name	Federal Status	Critical Habitat
Puget Sound Chinook Salmon	*Oncorhynchus tshawytscha*	Threatened	Designated
Coastal/Puget Sound Bull Trout	*Salvelinus confluentus*	Threatened	Designated
Puget Sound Steelhead Trout	*Oncorhynchus mykiss*	Threatened	Under Consideration

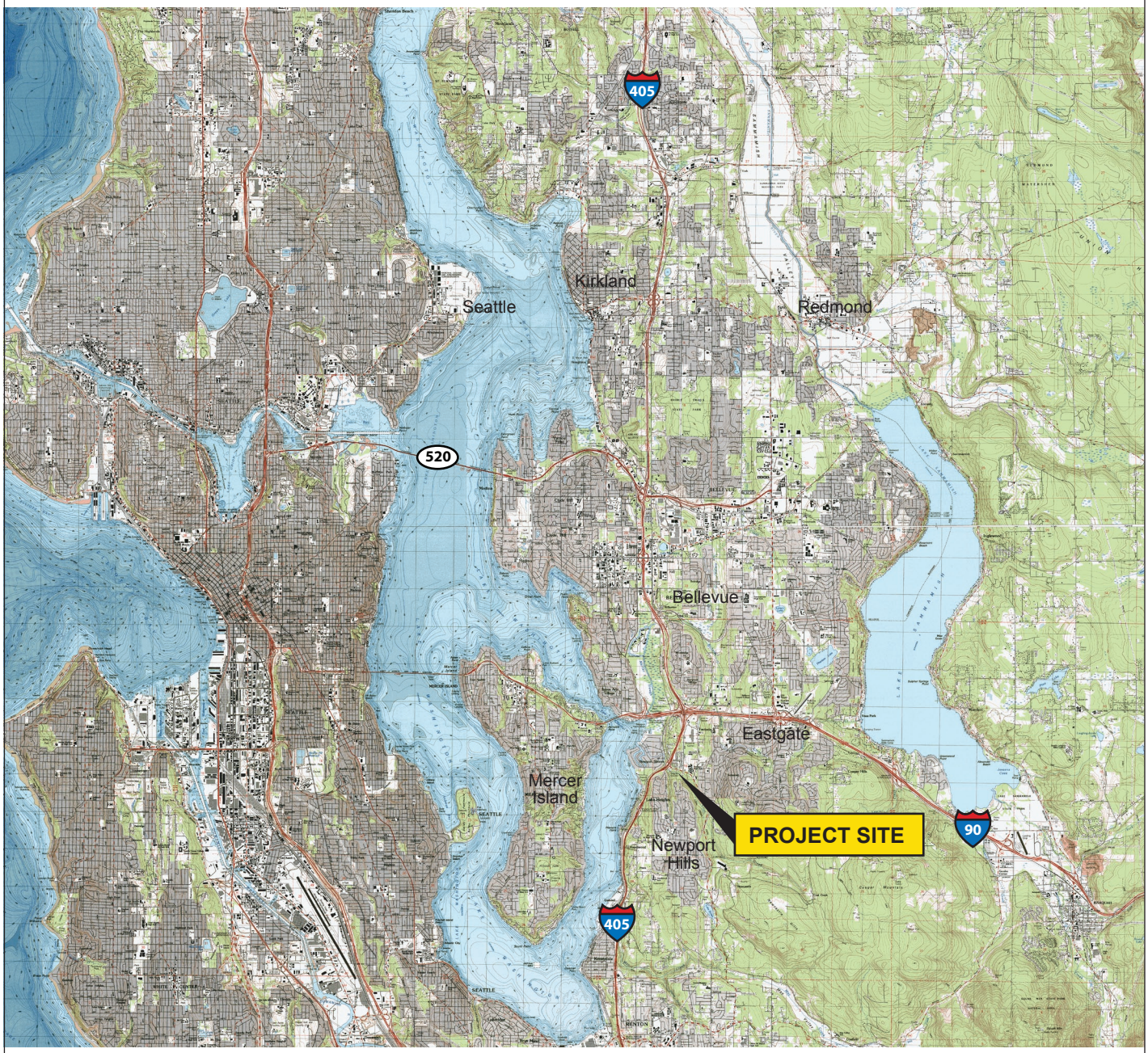

N

0 4000 Feet

Vicinity Map

City of Bellevue
Coal Creek Off-line Sediment Pond

RWBA0000-0010

July 2009

Figure 1

DAVID EVANS AND ASSOCIATES INC.

Gx1490

N

0 1 Mile

Gx1490

Project and Action Area Map

City of Bellevue
Coal Creek Off-line Sediment Pond

RWBA0000-0010

August 2009

Figure 2

DAVID EVANS AND ASSOCIATES INC.

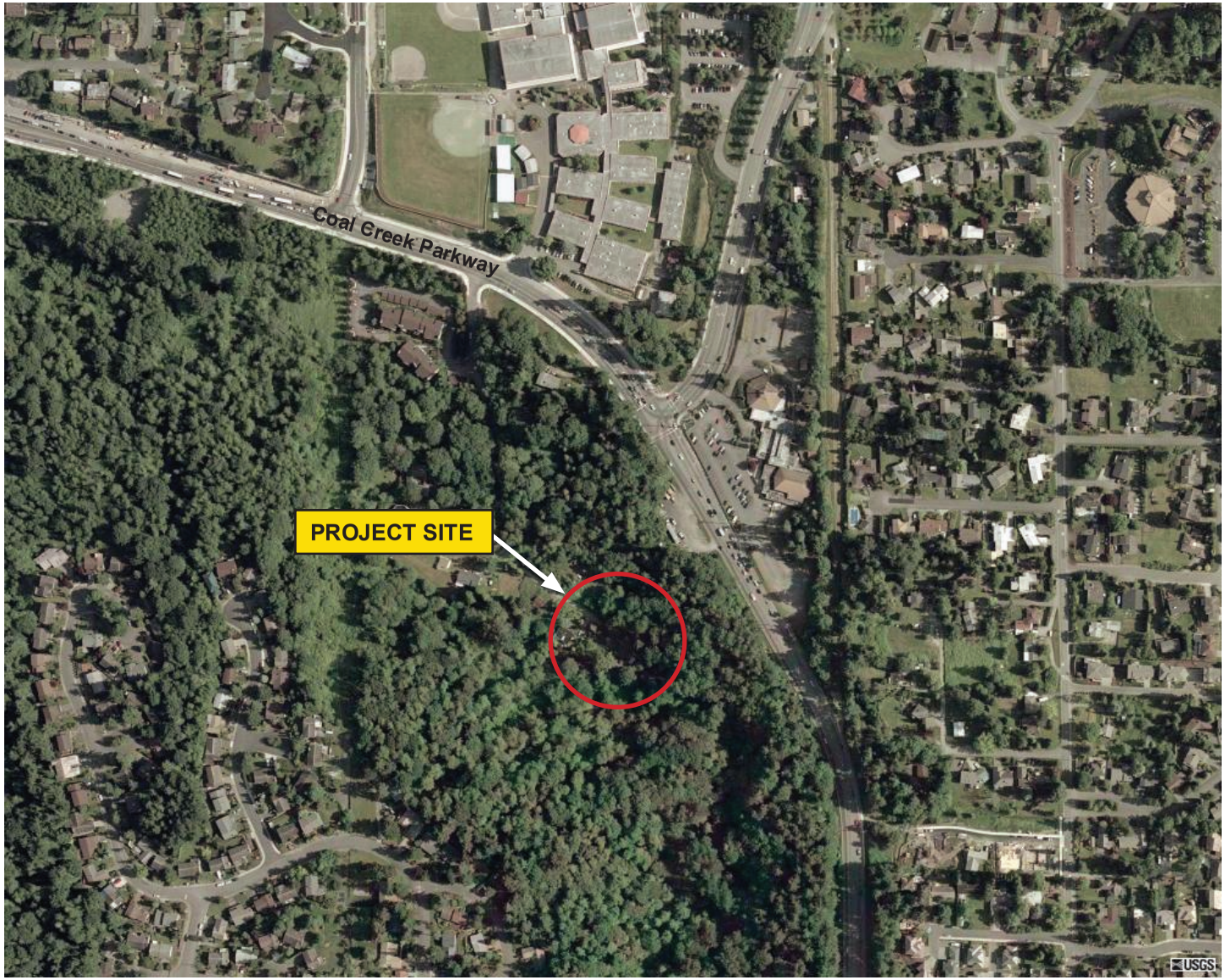

N

Not to Scale

Gx1490

Aerial Photograph

City of Bellevue
Coal Creek Off-line Sediment Pond

RWBA0000-0010

July 2009

Figure 3

DAVID EVANS AND ASSOCIATES INC.

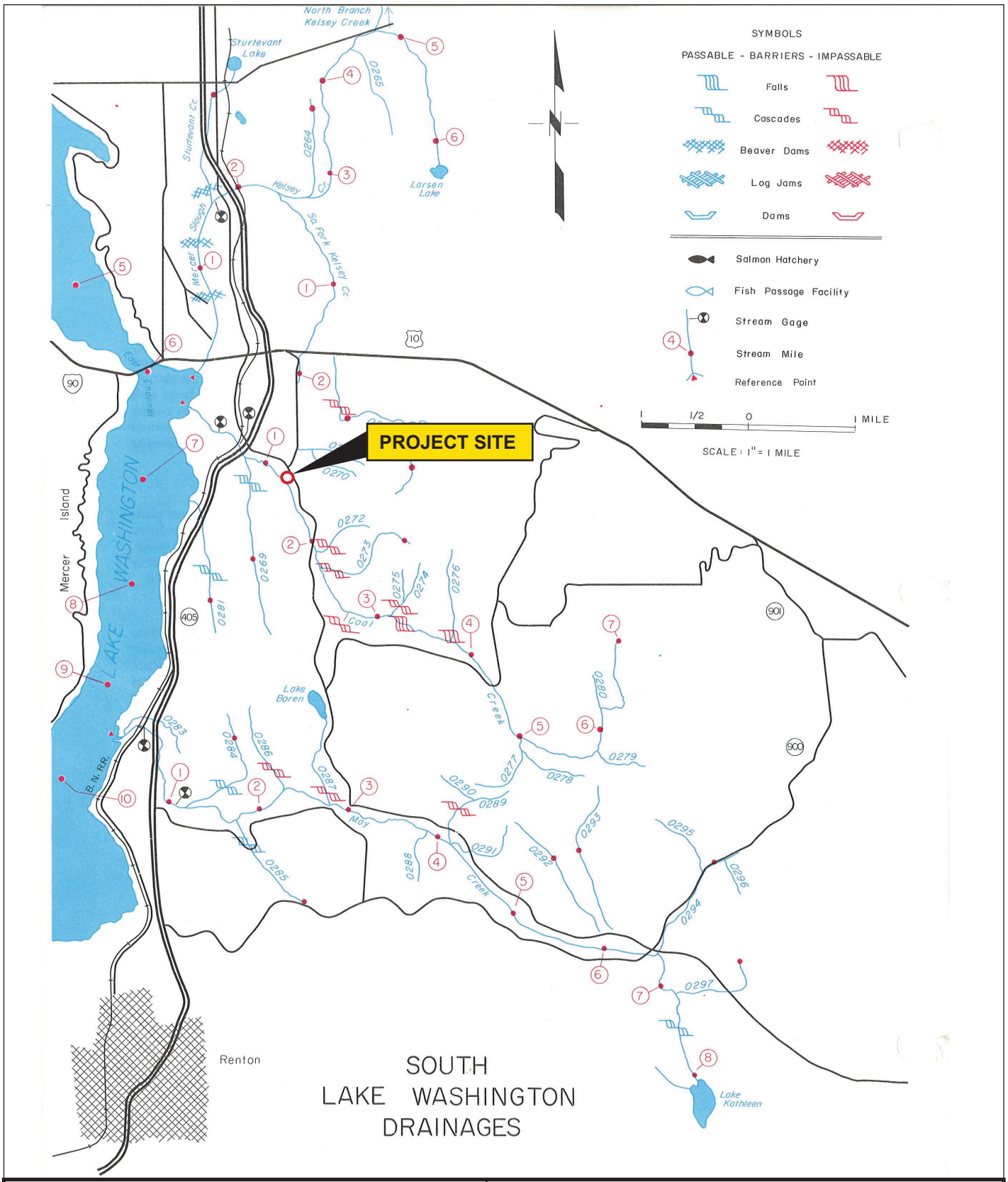

	WDFW Coal Creek Stream Map
	City of Bellevue *Coal Creek Off-line Sediment Pond*
	RWBA0000-0010
	July 2009
	Figure 4
	DAVID EVANS AND ASSOCIATES INC.

Gx1490

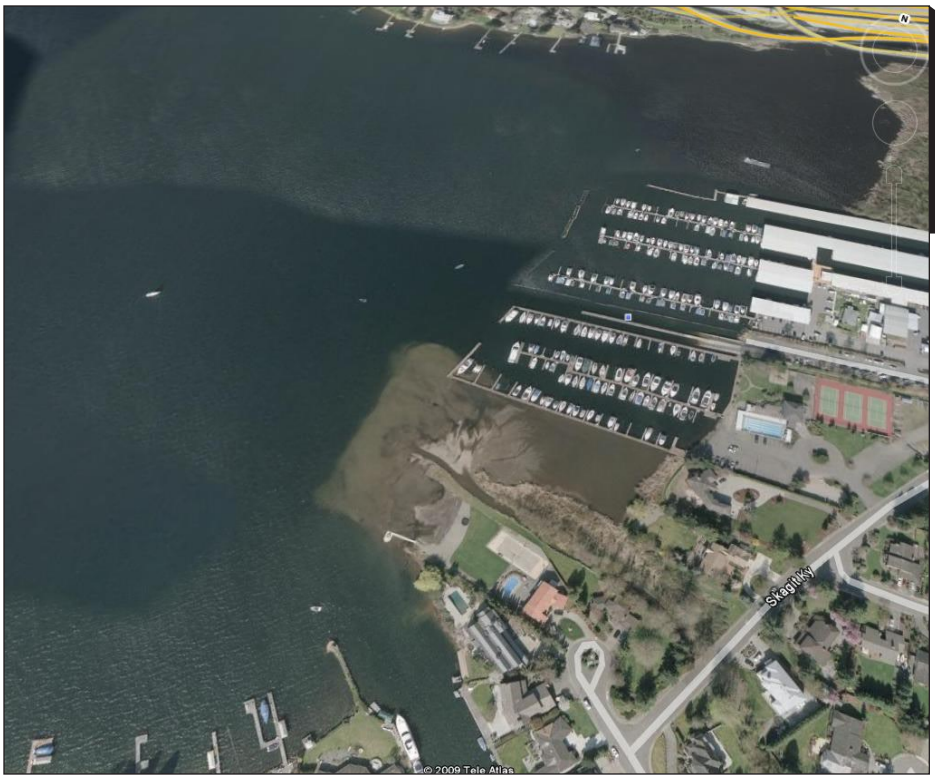

PHOTO 1

PHOTO 2

1 Mouth of Coal Creek.

2 Mouth of May Creek.

Delta Photographs

City of Bellevue
Coal Creek Off-line Sediment Pond

RWBA0000-0010

July 2009

Figure 5

DAVID EVANS AND ASSOCIATES INC.

Gx1490

1.1 Studies and Coordination

DEA reviewed existing literature and scientific data to determine species distribution, habitat requirements, and other pertinent biological parameters specific to the action area. Published information about the action area was reviewed for evidence of listed species and/or potential habitat. This BA was prepared following the review of project plans, public domain resource data, and multiple site visits.

The USFWS was consulted for information on the known or possible occurrence of plants and animals listed under the federal ESA that could occur in King County. The Washington Department of Fish and Wildlife (WDFW) Priority Habitats and Species (PHS) program (WDFW 2007) and the Washington Department of Natural Resources Washington Natural Heritage Program – *Sections that Contain Natural Heritage Features Associated with Wetlands* (WDNR 2009) were consulted for documented occurrences of listed species and their habitats. The potential use of the action area by listed species was investigated through review of the following information:

- WDFW – PHS data
- Sections that Contain Natural Heritage Features Associated with Wetlands (WDNR 2009)
- National Wetlands Inventory (NWI) Online Mapper, USFWS: http://www.fws.gov/wetlands/Data/mapper.html
- *Coal Creek Stabilization Program Draft Environmental Impact Statement – Volumes I and II*, prepared for the City of Bellevue Department of Utilities (Tetra Tech/KCM, November 2005)
- A Catalog of Washington Streams and Salmon Utilization – Volume 1 – Puget Sound Region. Washington Department of Fisheries (Williams et al. 1975)
- Salmon and Steelhead Habitat Limiting Factors Report for the Cedar – Sammamish Basin (Water Resource Inventory Area 8) (Kerwin 2001)

1.2 Field Investigation

DEA performed multiple site visits during May, July, and August 2009 to verify preliminary data findings, document existing habitat conditions, and document wildlife use. A stream survey was conducted on May 28, 2009. Plant species were identified according to Cooke (1997), Pojar and MacKinnon (1994), Washington State Department of Ecology (Ecology) (2001), and Hitchcock and Cronquist (1973).

2.0 PROJECT DESCRIPTION

The project is defined as the construction and operation of an off-line sediment pond designed to capture up to a maximum of 1,500 cubic yards on an annual basis. **Appendix D** contains a complete set of design and mitigation drawings. The off-line channel will function like a backwater channel that is always connected to Coal Creek at the outlet. The inlet will only be engaged during storm events when water level rises above the inlet weir. Once engaged, flows leaving Coal Creek

will course down a concrete spillway to the permanent pool of the sedimentation pond, which is about 7 feet below the crest of the weir at the edge of the channel. Within the sedimentation pond, flows will slow, allowing much of the coarser suspended load to settle out. Flows exiting the sedimentation pond will rejoin Coal Creek approximately 350 feet downstream from where the overflow was routed from the creek.

The sedimentation pond is designed to be engaged only during high flow events when most of the sediment transport occurs. **Graph 1** shows the percentage of Coal Creek flows to be routed through the facility assuming overflow beginning at around 30 cubic feet per second (cfs). The results shown are based on an analysis of streamflow data recorded by King County from 2002 to 2005. During the winter months, over 20 percent of the Coal Creek flows could be routed into the off-channel facility. However, the vast majority of the flow remains within Coal Creek itself. During the summer months, virtually all of the flow remains within Coal Creek.

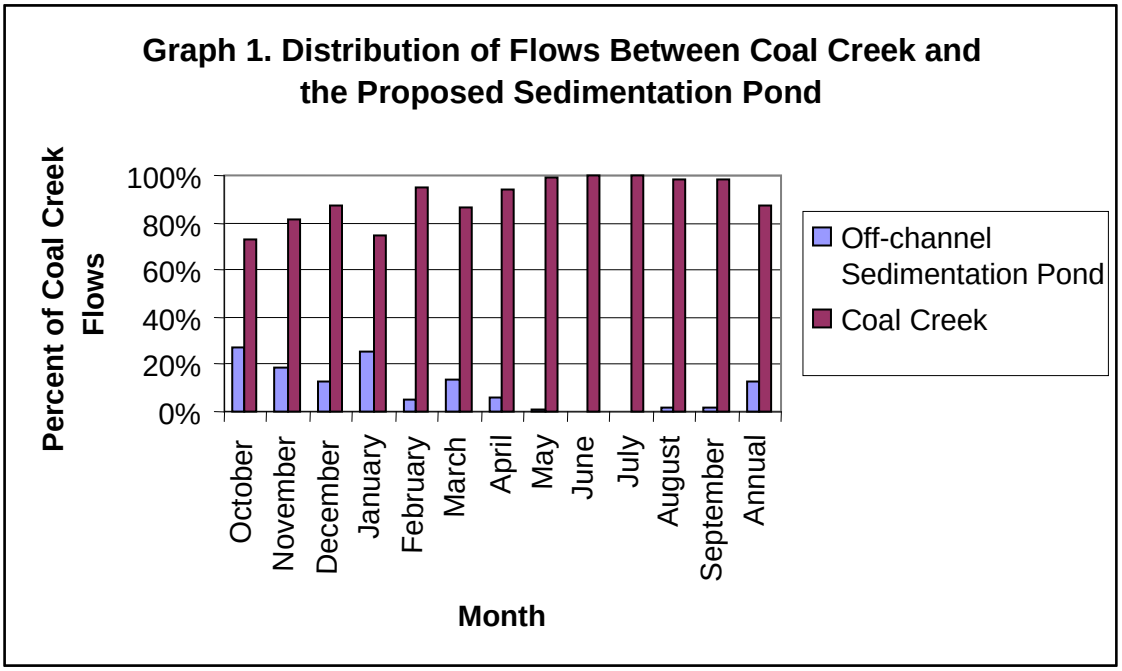

Because the flows into the sedimentation pond are overflows, it will not be capturing bed load, but instead targeting sands and finer-grained material. According to GeoEngineers (letter from Mary Ann Reinhart to Jerry Scheller, May 17, 2006), 76 percent of the sediment that is retained at the Coal Creek delta is sand. So having a facility to target sands is appropriate. Also, when operating in conjunction with the upstream in-line sedimentation facility, which targets the larger bed material, the two sedimentation ponds target the full spectrum of material that has been shown to move through the creek to the delta.

Most of the capture of suspended sediment is expected to occur during higher flows when the flows will overflow into the off-line sedimentation facility. An analysis was conducted using the recent stream gauge data and a suspended sediment rating curve that was developed by GeoEngineers in support of the Coal Creek Basin Plan (King County and the City of Bellevue 1986). The suspended sediment rating curve was based on monitoring data collected at the site of the U.S. Geological Survey (USGS) gauging station immediately upstream from the Newport Hills

Tributary. The rating curve provides an estimate of suspended sediment transport rate (cubic yards per day) related to streamflow. Applying the sediment rating curve to measured streamflow provides a means to determine when most of the suspended sediment is expected to be transported, taking into account the magnitude of sediment transport and the duration of various flows. Results of the analyses are shown in **Graph 2**, indicating that most of the suspended sediment load tends to be transported at flows exceeding 25 to 30 cfs, supporting the targeted diversion flow of 30 cfs.

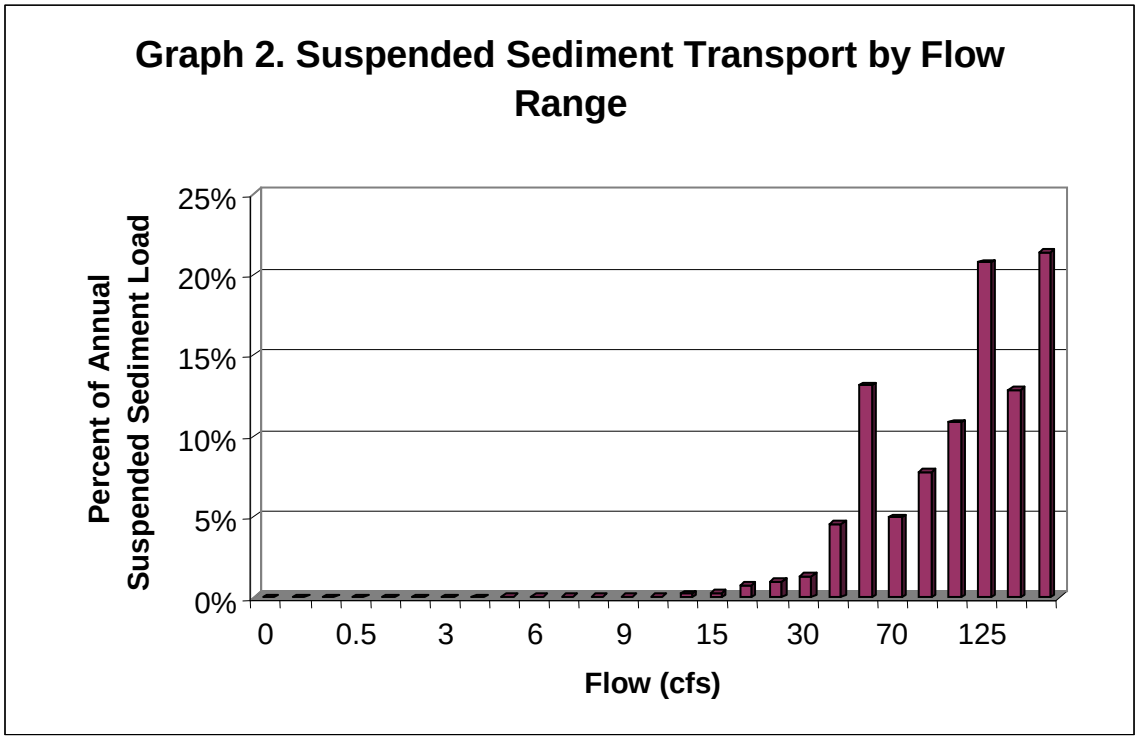

In summary, the key benefits of the off-line facility as opposed to an in-line facility are as follows:

1. The off-line facility is designed to engage only during higher flows when most of the sediment is being transported. During summer months, the facility will rarely engage; when it does, there will be a significant stream flow. As a result, the potential effects of warming Coal Creek during low flows will be avoided.
2. The facility will primarily affect the suspended sediment rather than the bedload. This is seen as a benefit since the finer material is what impacts spawning gravels and is also transported all the way to the delta where is has contributed to sedimentation problems.
3. The off-line facility will create some flood storage and will help to reduce flood flows.
4. The facility will maintain a connection at the downstream end (the outlet from the off-line sedimentation pond) and will allow the pond to provide rearing habitat in addition to refuge habitat during some flows.

The off-line sediment pond has two primary components consisting of the upstream inlet weir and sediment pond outlet.

Upstream Inlet Weir. The inlet weir consists of four sets of stop logs held in place by vertically set I-beams. The stop logs will be adjustable such that the top of weir elevation can be raised or lowered as needed. Due to the transient nature of creek channels, it is important that the City of Bellevue be able to adjust the inlet weir in order to fine tune its operation. For example, the City may need to change the elevation of the side channel weir should the bed aggrade at the point of diversion and there is a need to redirect more flow back to the channel. Note that the need to adjust the inlet weir elevation makes it difficult to accommodate fish passage since the elevation at the creek's edge may need to be changed.

In addition, the inlet weir also includes a strainer and two sweeper logs. The description references to "upstream" and "downstream" are with respect to Coal Creek. The strainer log is set at the upstream end of the inlet weir, is attached to the upstream-most I-beam, and extends out into the creek in order to catch debris that floats down the creek, thereby preventing it from hanging up on the remainder of the inlet weir. The sweeper logs will be placed at the center and at the downstream end of the inlet weir. The purpose of the sweeper logs is to help intercept and direct flows into the sedimentation pond. The sweeper logs will also tend to create localized scour, helping to maintain the depth at the main channel in addition to helping to suspend solids that can be swept into the sedimentation pond. Both the sweeper and the strainer logs will be constructed such that they can be adjusted in the future as adaptive management.

A log jam is also added directly across the creek from the inlet weir on the east side of the creek. The channel bank on the east side of the creek is not well defined. The log jam will help define the bank of the creek and direct flow towards the inlet weir.

A grade control log is proposed at the downstream end of the inlet structure. The grade control log is proposed to be buried in the creek such that the top of the log is at the thalwag elevation. The grade control is intended to help hold the grade of the upstream creek in place and prevent it from down-cutting at the inlet weir. This will help ensure that the inlet operates and continues to operate as designed.

Sediment Pond Outlet. The sediment pond outlet consists of a notched sill, a turning log, two log weirs, and a grade control log. The objective of the notched sill is to help maintain a low flow channel to facilitate fish ingress and/or egress during low flow periods. The log weirs will back water up to help provide flow depth at the outlet. The turning log will help direct flow in the creek downstream. The grade control log will act in a similar manner as the one at the inlet weir. It will help hold the grade of the upstream creek in place and prevent it from down-cutting at the outlet sill.

Bank protection in the form of large woody debris (LWD) will be placed along the bank opposite from the outlet from the sedimentation pond, and immediately downstream of the outlet. The bank protection is to ensure that flows leaving the pond do not create any erosion on the opposite bank. The streambank at the outlet is currently lined with large riprap.

Project Specifics. The project includes numerous small activities or actions. Each of these project actions are outlined in the attached design drawings and summarized below in **Table 2**.

Table 2: Impact Summary

Activity Causing Impact (clear, dredge, fill, pile drive, etc.)	Amount of Material Placed In or Removed	Area of Waterbody Directly Affected	Materials Removed	Materials Added
Inlet weir structure	13 CY (removed and replaced)	35 LF	Native streambank	Cast-in-place reinforced concrete, steel I-beams, weir plates, bedding material, and streambed gravel.
Upper log jam	3 CY removed, 3.5 CY replaced	55 LF	Native streambed / bank	Boulders and streambed gravel
Lower log jam	3 CY removed, 3.5 CY replaced	40 LF	Native streambed / bank	Boulders and streambed gravel
Sweeper log (2)	0 CY (cantilevered over waterbody)	5 LF	n/a	n/a
Strainer log	0 CY (cantilevered over waterbody)	5 LF	n/a	n/a
Upper bank logs (2)	2 CY (removed and replaced)	30 LF	Native streambank	Streambed gravel
Lower bank logs (4)	2 CY (removed and replaced)	52 LF	Rockery and native streambank	Streambed gravel
Upper grade control	10 CY (removed and replaced)	30 LF	Native streambed	Streambed gravel
Lower grade control	10 CY (removed and replaced)	30 LF	Native streambed	Streambed gravel
Turning log (1)	0 CY (removed and replaced)	15 LF	n/a	n/a
Outlet sill logs (3)	33 CY (removed and replaced)	45 LF	Rockery and native streambed	Streambed gravel
Upper log v-weir	27 CY (removed and replaced)	36 LF (perpendicular to stream)	Native streambed	Streambed gravel
Lower log v-weir	31 CY (removed and replaced)	42 LF	Native streambed	Rebar, streambed gravel
V-weir drop pools (2)	39 CY removed and 27 CY replaced	264 SF	Native streambed	Streambed gravel
Inlet streambed	28 CY removed and 110 CY replaced	750 SF	Native streambed	Streambed gravel
Outlet streambed	66 CY removed and 110 CY replaced	1900 SF	Native streambed	Streambed gravel
Outlet excavation	25 CY removed	35 LF	Native streambed / bank	Streambed gravel
Sheet pile	0 CY added, 0 CY removed	75 LF	n/a	Plastic or steel sheet pile

Key Design Criteria. Several key factors were considered when deciding what would be used to construct the spillway: stability, creek hydrology, topographic limitations, and fish passage. Stability at the inlet is critically important because, if the inlet degrades or washes out, the creek channel could be permanently rerouted into the sediment pond. In addition, if the inlet washes out, it could create a large sediment slug that, depending on when the pond was last cleaned, may

exceed the capacity of the sedimentation pond. Any sediment that is not trapped in the pond would flow downstream and could be damaging to existing habitat downstream of the project area.

Coal Creek is dominated by urban hydrology and as such is expected to be "flashy" in response to runoff from urban surfaces. What this means is that the flows can increase fairly rapidly and subside quickly. As a result, the flows overflowing onto the spillway entering the sedimentation pond can stop fairly quickly. This needs to be taken into consideration if fish passage is allowed up the spillway. Once flows drop below the overflow level, any fish trying to get up the spillway through a series of pools will be trapped until the next overflow event.

As stated above, the need to adjust the inlet weir elevation makes it difficult to accommodate fish passage since the elevation at the creek's edge may need to be changed. As a result of these factors, it was concluded that a concrete-lined spillway channel would provide the necessary stability and slope protection and would not have pools that could strand fish.

Maintenance of the pond is primarily associated with removal of accumulated sand and debris. Prior to maintenance, a City engineer or their designee will inspect the site to determine if any adjustments to the inlet or outlet are needed. A biologist will also inspect the site to determine if fish could potentially be in the pond. This could occur if portions of the pond near the outlet do not fill up with sand. Although they would have an exit route, any fish present within the pond would need to be removed and the outlet secured with a block net. Once any residual fish are removed, maintenance activities would commence. During maintenance, the crew will enter the pond via the gravel access road. Water remaining in the pond will be pumped into the woods. The crew will then excavate and dispose of the accumulated sediments from the pond. Excavation will be accomplished with an excavator and transported off-site with dump trucks. A City engineer or their designee will also inspect the site to determine if any adjustments to the inlet or outlet are needed. Construction and maintenance activities would occur during the WDFW in-water work window for Coal Creek in order to reduce potential impacts to salmonids. The WDFW in-water work window for Coal Creek extends from July 1 through September 15. Additional timing restrictions may be imposed by other agencies.

3.0 PROJECT AREA AND ACTION AREA DEFINITION

3.1 Project Area

The project area is defined as the immediate vicinity of the proposed action. The project area includes the footprint of the off-line sediment pond, constructed log jam, riparian landscaping, access road, and the proposed staging area.

3.2 Action Area

The action area includes all areas that could be affected directly or indirectly by the proposed action and is not limited to the actual work area (project area). The action area represents the geographic extent of the physical, biological, and chemical impacts from the project (**Figure 2**). The project area and secondary project features are considered when defining the action area. The

action area will include potential effects from visual and audible disturbance, terrestrial habitat impacts, and impacts to aquatic environments.

Project-related construction or maintenance does not require pile driving or blasting. Equipment will include dump trucks, excavators, and back-hoes. The project area is within a forested ravine such that noise generated during construction will be dampened by the surrounding vegetation. I-405 is located approximately 0.5 mile northwest of the project area; Coal Creek Parkway is located approximately 0.08 mile northeast of the project area.

The primary potential aquatic effects are associated with turbidity and sedimentation during construction and maintenance. The extent of turbidity and sedimentation effects can vary widely depending on area of disturbance, sediment sources, particle size, and flow fluctuations. All work in or near the water, and water discharged from the project area, are required to meet the State's Water Quality Standards, WAC 173-201A. A mixing zone for turbidity is authorized within WAC 173.201A-030 during and immediately after necessary in-water or shoreline construction activities that result in the disturbance of in-place sediments. Based on summer flows being less than 10 cfs, the allowable mixing zone extends 100 feet downstream.

Based on the project site being located within a forested ravine, absence of pile driving and blasting, presence of an existing high-capacity road being approximately 0.08 mile from the project area, and 100-foot mixing zone, the direct effects will be contained as outlined in **Figure 2**.

4.0 ENVIRONMENTAL BASELINE

The project area is within a generally forested riparian corridor that extends from I-405 southeast to the headwaters of Coal Creek and beyond. Although this corridor is bisected by few roads, it has been encroached upon by various developments. It is relatively extensive and provides suitable habitat for a wide array of wildlife. Habitat types within the project area that provide forage, cover, and breeding opportunities include deciduous forested uplands, Coal Creek, and wetlands. These factors have resulted in a diverse assemblage of wildlife in the project vicinity. Site photos of the project area are shown in **Figure 6**.

Coal Creek. Coal Creek (stream number 08-0268) is a seven-mile-long stream originating in the Newport Hills/Newcastle area. The project site is located in the vicinity of RM 1.4, which is approximately one-half mile upstream of the I-405 crossing over Coal Creek. Coal Creek flows through a ravine with a steep gradient between RM 2.7 and 4.0 where an impassable cascade and 10-foot falls are located (Williams et al. 1975).

PHOTO 1

PHOTO 2

1 Coal Creek immediately downstream of the project site.

2 Project site begins at small red alder trees.

Site Photographs

City of Bellevue
Coal Creek Off-line Sediment Pond

RWBA0000-0010

August 2009

Figure 6

DAVID EVANS AND ASSOCIATES INC.

Gx1490

PHOTO 3

PHOTO 4

3 Sediment pond outlet would enter Coal Creek in this area.

4 Thick English ivy between existing house and Coal Creek.

Site Photographs

City of Bellevue
Coal Creek Off-line Sediment Pond

RWBA0000-0010

August 2009

Figure 6

DAVID EVANS AND ASSOCIATES INC.

Gx1490

PHOTO 5

PHOTO 6

5 Coal Creek immediately upstream of project site.

6 Inlet to sediment pond would occur in this area.

Site Photographs

City of Bellevue
Coal Creek Off-line Sediment Pond

RWBA0000-0010

August 2009

Figure 6

DAVID EVANS AND ASSOCIATES INC.

Gx1490

PHOTO 7

PHOTO 8

7 Inlet to sediment pond would occur in this area.

8 View of existing on-site clearing. House is behind telephone pole.

Site Photographs

City of Bellevue
Coal Creek Off-line Sediment Pond

RWBA0000-0010

August 2009

Figure 6

DAVID EVANS AND ASSOCIATES INC.

Gx1490

PHOTO 9

PHOTO 10

9 View of existing on-site clearing. House is behind telephone pole.

10 Entrance to project site.

Site Photographs

City of Bellevue
Coal Creek Off-line Sediment Pond

RWBA0000-0010

August 2009

Figure 6

DAVID EVANS AND ASSOCIATES INC.

Gx1490

PHOTO 11

PHOTO 12

11 Existing house and cars.

12 Existing trailer next to house and beer can pile.

Site Photographs

City of Bellevue
Coal Creek Off-line Sediment Pond

RWBA0000-0010

August 2009

Figure 6

DAVID EVANS AND ASSOCIATES INC.

Gx1490

PHOTO 13

PHOTO 14

13 Close up of on-site wetland vegetation.

14 Steep slope immediately north of proposed sediment pond.

Site Photographs

City of Bellevue
Coal Creek Off-line Sediment Pond

RWBA0000-0010

August 2009

Figure 6

DAVID EVANS AND ASSOCIATES INC.

Gx1490

Coal Creek is a Type F stream that requires a 100-foot buffer at an undeveloped site. It is not considered a Shoreline of the State. A stream survey was conducted within the project reach on May 28, 2009, for a total distance of approximately 662 linear feet. The survey starting point was approximately 103 feet downstream of the project parcel boundary and continued upstream past the existing sewer crossing, ending at a cluster of boulders previously installed as part of a bank protection project. The stream survey was generally based on the U.S. Forest Service (USFS) – Pacific Northwest Region (Region 6) method, except that the woody debris threshold was lowered to include smaller pieces (>6 feet long by 4 inches wide).

Twenty natural sequence order (NSO) units were recorded, including 10 riffles (R) and 10 pools (P) (**Table 3**). Habitat included 341 linear feet of riffles and 321 linear feet of pools. Although pools were abundant, they tended to be relatively shallow with a residual depth ranging from 0.5 to 2.1 feet deep (mean = 1.2 feet). Several of the pools in the lower reach were created by rootwads imbedded in the large (2-man) riprap/boulder bank armoring or fallen boulders. The left bank (facing upstream) was armored for approximately 186 linear feet. Armoring started off-site along the stream edge at the downstream residence and continued on-site, ending at NSO 7. The bankfull width (BFW) of riffles ranged from 22 to 40 feet. Approximately 61 pieces of wood were recorded in the survey reach, which included stumps and logs installed for bank protection or mitigation. The predominance of the pieces of wood were relatively small and deciduous, with only three being large enough to have been counted if strictly adhering to the USFS protocol where small wood is defined as being greater than 12 inches at a length of 25 feet from the large end. Based on the results of two wolman pebble counts, the substrate in the project area was dominated by coarse (D50 = 17.9 millimeters [mm]) to very coarse (D50 = 41.6 mm) gravels. Fines less than 6 mm ranged from 26 to 37 percent. Most of the surface fines were along the stream edges where they settle out during flood events.

On-site streamside vegetation is generally native and provides shade. Areas of disturbance were limited to the left-bank. The overall dominant riparian tree is red alder (*Alnus rubra*), followed by big-leaf maple (*Acer macrophylum*) intermixed with a few mature Douglas fir (*Pseudotsuga menziesii*) and black cottonwood (*Populus balsamifera*). There are a few small western red cedar (*Thuja plicata*) and bitter cherry (*Prunus emarginata*) trees on-site. Dominant shrubs include vine maple (*Acer circinatum*), salmonberry (*Rubus specabilis*), and a lesser amount of red-osier dogwood (*Cornus sericea*) and beaked hazelnut (*Corylus cornuta*). On-site areas that lacked shade included NSO numbers 9, 10, and 19. Native species were generally absent at NSO numbers 9 and 10, where the dominant species were reed canarygrass (*Phalaris arundacea*) and Himalayan blackberry (*Rubus armeniacus*) intermixed with bittersweet nightshade (*Solanum dulcamara*) and morning glory (*Convolvulus arvensis*). NSO 19 had an opening and barren strip dominated by hydroseed grasses and weeds immediately downstream of and behind the log and rootwad bank protection area. English Ivy (*Hedera helix*) covered most of the trees and bank armoring along the left bank of the lower reach. Other species noted along or near the stream channel during the survey included devil's club (*Oplopanax horridus*), bracken fern (*Pteridium aquilinum*), lady fern (*Athyrium filix-femina*), sword fern (*Polystichum munitum*), creeping buttercup (*Ranunculus repens*), Pacific bleeding heart (*Dicentra formosa*), field horsetail (*Equisetum arvense*), giant horsetail (*Equisetum telmateia*), and stinging nettle (*Urtica dioica*).

Table 3: Stream Survey Summary

NSO #	Habitat Type & Num.	Length	Width	Max. Depth	Ave. Depth	Depth at Pool Crest	Residual Depth	BFW	Comment
1	R1	63	14	0.9	0.3			26	Off-site. Left Bank Armored.
2	P1	24	13	1.2	0.7	0.7	0.5		Off-site. Left Bank Armored.
3	R2	16	12	0.8	0.4			31	Off-site. Left Bank Armored.
4	P2	15	11.4	1.1	0.7	0.6	0.5		On-site. Left Bank Armored.
5	R3	16	15	1.0	0.4			23.5	Left Bank Armored.
6	P3	22	12.6	1.8	1.0	0.6	1.2		Left Bank Armored.
7	R4	30	12	0.9	0.5			26	Left Bank Armored.
8	P4	29	11.5	1.8	0.8	0.5	1.3		
9	R5	14	15	0.6	0.3			22	
10	P5	24	11	1.2	0.6	0.5	0.7		
11	R6	30	11	0.8	0.6			22	
12	P6	52	12	2.2	1.0	0.5	1.7		
13	R7	14	15	0.4	0.2			29	
14	P7	37	8	1.3	0.8	0.4	0.9		
15	R8	28	9	0.7	0.4			25	
16	P8	24	16	2.5	1.2	0.4	2.1		
17	R9	38	21	0.5	0.2			40	
18	P9	54	9.5	2.1	1.1	0.5	1.6		Off-line inlet would connect near upper end.
19	R10	92	22	0.7	0.3			28	Off-line inlet would connect near lower end. Left bank contains many logs placed for bank protection.
20	P10	40	14	1.8	0.7	0.5	1.3		

Habitat conditions in Coal Creek are variable, but typical of most urbanized streams in that habitat conditions have been degraded. According to Kerwin (2001), the primary limiting factors affecting Coal Creek include increased sedimentation, loss of channel complexity, degraded riparian conditions, altered hydrology, and poor water quality.

Increased sedimentation is the result of streambank erosion and the occasional catastrophic failure of old coal mine tailings along the steep slopes above the creek (Kerwin 2001). The large sediment load degrades spawning habitat by increasing the amount of fines and thereby decreasing the egg-to-fry ratio, increases flooding in depositional areas by reducing channel capacity, and has created a large delta.

The loss of channel complexity is the result of numerous factors, but includes manipulation of the channel between the mouth and I-405, and lack of LWD. The lowermost reach of Coal Creek was adversely impacted by the development of Newport Shores and surrounding area by diverting the channel, excavation of canals, channelization, and bank armoring. LWD is apparently absent in the lower reach, but increased to 1.8 and 1.1 pieces per channel width in the middle and upper reaches

(City of Bellevue unpublished data 2007; Kerwin 2001). The City of Bellevue added approximately 450 pieces of LWD in the middle reach during 2006.

Degraded riparian conditions are most pronounced along the lower reach downstream of I-405. Although the middle and upper reaches do contain large forested areas, these reaches are dominated by deciduous species that became established after logging and the extensive coal mining activities ceased. Historically, mature coniferous forest would have been the dominant component of the riparian zone and would have contributed LWD to this stream system.

Altered hydrology is due to stormwater runoff from impervious areas as well as past mining activities. Previous studies have reported that base flows in Coal Creek are higher than expected due to augmentation from mine tunnels.

Fisheries Resources. Fisheries resources in Coal Creek include anadromous and resident species. The WDFW–PHS data obtained for this project reported that fall Chinook salmon (*Oncorhynchus tshawytscha*), coho salmon (*O. kisutch*), sockeye salmon (*O. nerka*), winter steelhead (*O. mykiss*), and resident cutthroat trout (*O. clarki*) utilize Coal Creek (WDFW 2007). Based on a review of WDFW salmon spawning survey data, limited numbers of coho salmon have been observed in Coal Creek. This data includes 45 surveys conducted between 1976 and 2002. During this time period, a total of 246 salmon were observed, composed of 243 coho salmon and 3 sockeye salmon. The highest daily count was on January 5, 1978, when 52 coho salmon were observed between RM 2.0 and 3.3. These surveys apparently focused on documenting coho salmon since most occurred from November through January. Small numbers of Chinook salmon have also been observed in Coal Creek. Six Chinook salmon were observed spawning near RM 0.6 during October and November of 2004 (Tetra Tech/KCM 2005). Steelhead trout have been documented in both the mainstem and in a few tributaries (Newcastle and 08-0273). Other non-salmonids observed in Coal Creek include sculpin (*Cottus* sp.), largescale sucker (*Catostomus macrocheilus*), and lamprey (*Lampetra* sp.). Data from the City of Bellevue from various electrofishing surveys conducted from 1996 through 2003 resulted in the capture of 517 cutthroat trout, 572 rainbow trout, 33 trout less than 80 mm, 625 coho salmon, 340 sculpin (species not reported), and 32 lamprey (species not reported). All known fish presence data is summarized in **Table 4**.

Table 4: Coal Creek Fish Use Summary

#	Common Name	Comment
1.	Chinook Salmon	Species of Local Importance per city code (20.25H.150) and federally listed as threatened.
2.	Coho Salmon	Species of Local Importance per city code (20.25H.150).
3.	Sockeye Salmon	Three observed during WDFW salmon spawning surveys.
4.	Steelhead Trout	Federally listed as threatened. Juvenile "trout" were abundant based on data from various electrofishing surveys conducted from 1996 through 2003.
5.	Cutthroat Trout	Abundant based on data from various electrofishing surveys conducted from 1996 through 2003.
6.	Largescale Sucker	Observed at downstream in-line site during site visits.
7.	Sculpin	Probably the most abundant non-salmonid.
8.	Lamprey	Probably western brook lamprey (*Lampetra richardsoni*).

Other native species that could potentially utilize Coal Creek include three-spine stickleback (*Gasterosteus aculeatus*), chum salmon (*O. keta*), kokanee (*O. nerka*), peamouth (*Mylocheilus caurinus*), long-fin smelt (*Spirinchus thaleichthys*), and speckled dace (*Rhinichthys osculus*). Lampreys have been documented in Coal Creek, but which species of lamprey was not documented. Western brook lampreys are most common locally, but river lampreys (*L. ayresi*) have also been documented in Lake Washington. Lastly, species information on sculpins in Coal Creek was also not included in electrofishing data obtained from the City of Bellevue for inclusion in this report. Several different species of sculpin have been documented in the Lake Washington Basin.

Water Quality. Water quality in Coal Creek has been studied by various agencies. Based on a review of King County data from 1990 through 1993 collected at station number 0442 (located downstream of the project area), water quality parameters are highly variable. The maximum stream temperature was 62 degrees Fahrenheit (°F) during the month of August (King County 1994). Monthly minimum/maximum stream temperatures are as follows: January = 34 to 46°F, February = 32 to 50°F, March = 43 to 51°F, April = 43 to 46°F, May = 51 to 54°F, June = 53 to 57°F, July = 57 to 59°F, August = 51 to 62°F, September = 49 to 55°F, October = 50 to 55°F, November = 50 to 52°F, and December = 39 to 43°F. Stream temperatures reaching 73°F have been reported near the mouth of Coal Creek (Kerwin 2001). Turbidity readings are relatively high in Coal Creek compared to other streams in the Lake Washington Basin, with the maximum reading being 129.0 nephelometric turbidity units (NTUs). Elevated conductivity readings have also been documented in Coal Creek. Biotic Index Ratings from 1991 and 1992 both resulted in a fair rating (King County 1994).

King County Water and Land Resources Division (KCWLRD) maintains updated water quality data on their webpage for Site 0442. Temperature ranged from a low of 6.0° Celsius (C) (42.8° F) on February 6, 2008, to a high of 16.5° C (61.7° F) on July 9, 2008. Turbidity ranged from a low of 1.90 NTU on April 9, 2008, to a high of 109 NTU on August 20, 2008.

Coal Creek is designated as "Core Summer Salmonid Habitat" for aquatic life use and "Primary Contact" for recreational use. The lower portion of Coal Creek has been assigned an additional "Supplemental Spawning and Incubation Protection" temperature criteria of 13º C (55.4° F) that is applied from September 15th to May 15th. Based on a review of the KCWLRD web data for 2007/2008, this criteria was met, but temperature measurements above this criteria were reported during early September (15.3 ºC on September 5, 2007). Note that the criterion was not meet during several months in the early 1990's based on King County data (King County 1994).

The final 2004 Water Quality Assessment – Category 5 Listing for Coal Creek includes one listing for fecal coliform (Ecology 2005). The 2008 Ecology 303(d) list, which was approved by the Environmental Protection Agency (EPA) on January 29, 2009, included five listings. **Table 5** summarizes water quality data in Coal Creek and includes the parameter tested, category, and station.

Table 5: Coal Creek 2008 Water Quality Assessment

Parameter	Category	Station
Ammonia - N	1	Station 442@ RM 0.8 0 excursions out of 39 samples.
Temperature	2	Station 442 @ RM 0.8, criterion exceeded in 2002.
pH	2	Station 442 @ RM 0.8 a few excursions but limited data.
Dissolved Oxygen	5	Station 442 @ RM 0.8 at least 10 percent excursions
Fecal Coliform	5	Station 442 @ RM 0.8 standards not met 1998 – 2002.

Habitat Summary. Existing stream and watershed conditions were quantified by using watershed and habitat parameters as defined by the "Matrix of Pathways and Indicators" developed by National Oceanic and Atmospheric Administration (NOAA) Fisheries. The "Matrix of Pathways and Indicators" summarizes important parameters for six major pathways, including:

1. Water Quality
2. Habitat Access
3. Habitat Elements
4. Channel Condition and Dynamics
5. Flow/Hydrology
6. Watershed Conditions

These six major pathways are further broken down into a total of 18 indicators. As an example, the water quality pathway is composed of 3 indicators: temperature, sediment/turbidity, and chemical contamination/nutrients. The indicator conditions are classified as either "properly functioning," "at risk," or "not properly functioning." Criteria for each condition is defined by a range or goal based on the best scientific data available, but criteria are not absolute, and may be adjusted for unique watersheds (NOAA Fisheries 1996).

The USFWS utilizes two additional pathways that specifically address bull trout, including subpopulation characteristics and integration of species and habitat conditions (USFWS 1998b). The subpopulation characteristic pathway is composed of four indictors including subpopulation size, growth and survival, life history diversity and isolation, and persistence and genetic integrity. **Table 6** summarizes the baseline conditions based on NOAA Fisheries and USFWS criteria.

Table 6: Matrix of Pathways and Indicators Summary

Pathway	Indicators	Baseline Conditions Coal Creek
Water Quality	Temperature	Not Properly Functioning
	Sediment	Not Properly Functioning
	Chemical Contamination & Nutrients	Functioning at Risk
Habitat Access	Physical Barriers	Functioning at Risk
Habitat Elements	Substrate	Functioning at Risk
	LWD	Not Properly Functioning
	Pool Frequency	Not Properly Functioning
	Pool Quality/Depth	Not Properly Functioning
	Off-Channel Habitat	Not Properly Functioning
	Refugia	Not Properly Functioning
Channel Conditions and Dynamics	Width/Depth Ratio	Not Properly Functioning
	Streambank Condition	Functioning at Risk
	Floodplain Connectivity	Functioning at Risk
Flow/Hydrology	Change in Peak/Base Flows	Not Properly Functioning
	Increase in Drainage Network	Functioning at Risk
Watershed Conditions	Road Density and Location	Functioning at Risk
	Disturbance History	Functioning at Risk
	Riparian Reserve/Conservation Areas	Functioning at Risk
Subpopulation Characteristics (bull trout)	Subpopulation Size	Not Properly Functioning
	Growth and Survival	Not Properly Functioning
	Life History Diversity and Isolation	Not Properly Functioning
	Persistence and Genetic Integrity	Not Properly Functioning
Species and Habitat	Species Integration/Habitat Conditions	Not Properly Functioning

Wetlands. Wetlands on the McIntosh parcels were previously identified, delineated, and categorized by Jones & Stokes (2008). This section relies on that data. Jones & Stokes (2008) delineated two wetlands and three streams (described later) on the project site. **Table 7** summarizes the wetland data.

Table 7: Wetland Summary

Wetland ID	Ecology[1] Category	Wetland Size (acres)	Ecology[1] Wetland Class	Total Wetland Functions Score	Water Quality Functions Score	Hydrology Functions Score	Wildlife Functions Score	City of Bellevue Buffer Width
1	III	0.73 +	Slope	45	12	12	21	110 feet
2	IV	0.006	Depressional	21	6	5	10	NA

[1] Washington State Department of Ecology

WETLAND 1: Wetland 1 is a palustrine forested/scrub-shrub deciduous wetland located on the west side of Coal Creek (Jones & Stokes 2008). It is dominated by red alder and salmonberry. Since Wetland 1 is on the west side of Coal Creek, it would not be directly impacted by construction of the off-line sediment pond.

WETLAND 2: Wetland 2 is a palustrine emergent wetland located near the existing on-site structure (Jones & Stokes 2008) and would be completely excavated during construction. It is an isolated wetland dominated by creeping buttercup, common horsetail, and unidentified grasses. Since it is only 254 square feet in area, it may not be regulated by the City of Bellevue. The Corps does not have regulatory authority over isolated wetlands, but Ecology does.

4.1 Puget Sound Chinook Salmon

Federal Status

Puget Sound Chinook salmon are listed as a threatened species in Washington under the ESA. The NMFS is the lead regulatory agency for this listing under the ESA.

Critical Habitat

The Lake Washington Subbasin (HUC 17110012) has been designated as Chinook salmon critical habitat, which was published in the final rule on September 2, 2005 (70 FR 52629). However, Coal Creek was not included. The closest designated critical habitat is Lake Washington, which is approximately 1.4 mile downstream from the project area. Therefore, designated critical habitat for Chinook salmon occurs near the downstream extent of the action area where Coal Creek enters Lake Washington.

Within areas designated as critical habitat, the Primary Constituent Elements (PCEs) essential for the conservation of these Evolutionarily Significant Units are those sites and habitat components that support one or more life stages. The PCEs are further described as:

(1) Freshwater spawning sites with water quantity and quality conditions and substrate supporting spawning, incubation and larval development;

(2) Freshwater rearing sites with:

- *(i) Water quantity and floodplain connectivity to form and maintain physical habitat conditions and support juvenile growth and mobility;*
- *(ii) Water quality and forage supporting juvenile development; and*
- *(iii) Natural cover such as shade, submerged and overhanging large wood, log jams and beaver dams, aquatic vegetation, large rocks and boulders, side channels, and undercut banks.*

(3) Freshwater migration corridors free of obstruction and excessive predation with water quantity and quality conditions and natural cover such as submerged and overhanging large wood, aquatic vegetation, large rocks and boulders, side channels, and undercut banks supporting juvenile and adult mobility and survival;

(4) Estuarine areas free of obstruction and excessive predation with:

(i) Water quality, water quantity, and salinity conditions supporting juvenile and adult physiological transitions between fresh- and saltwater;

(ii) Natural cover such as submerged and overhanging large wood, aquatic vegetation, large rocks and boulders, side channels; and

(iii) Juvenile and adult forage, including aquatic invertebrates and fishes, supporting growth and maturation.

(5) Nearshore marine areas free of obstruction and excessive predation with:

(i) Water quality and quantity conditions and forage, including aquatic invertebrates and fishes, supporting growth and maturation; and

(ii) Natural cover such as submerged and overhanging large wood, aquatic vegetation, large rocks and boulders, and side channels.

(6) Offshore marine areas with water quality conditions and forage, including aquatic invertebrates and fishes, supporting growth and maturation.

Habitat Requirements

Migrating adult Chinook salmon seek cover in deep pools, log jams, and undercut banks, until ready to spawn. They require a steady supply of clean, cool, well oxygenated water, and clean gravel for successful spawning. Factors influencing the survival of all juvenile salmonids include the availability of suitable habitat, prey, and refuge from predators and floods. Habitat complexities in the form of pools and riffles, with interspersed downed woody debris of varying size classes are additionally important for the instream survival of both adult and juvenile salmonids. Chinook salmon from the Lake Washington Subbasin are referred to as ocean type since most spend only a few months in freshwater after emergence.

Occurrence

Small numbers of Chinook salmon have been observed in Coal Creek. Six Chinook salmon were observed spawning near RM 0.6 during October and November of 2004 (Tetra Tech/KCM 2005). The project reach is at approximate RM 1.4, and no barriers exist between RM 0.6 and the project site. Therefore, Chinook salmon could reach the project area to either spawn or access potentially suitable habitat upstream of the project reach. Data from the City of Bellevue from various electrofishing surveys conducted from 1996 through 2003 from the general project area resulted in the capture of over 2,000 fish, none of which were Chinook salmon.

Based on a review of Chinook salmon juvenile and adult life-history data, this species of salmonid should not be present in the project area during the months of July and August. The WDFW in-water work window for Coal Creek is from July 1 through September 15. Therefore, construction and maintenance activities will be timed to avoid direct impacts to both juvenile and adult Chinook salmon, since juvenile Chinook salmon will have migrated out of Coal Creek and returning adults will not have arrived yet. However, both juveniles and adults could potentially move through the project area after construction and maintenance activities.

4.2 Bull Trout

Federal Status

Bull trout are listed as a threatened species in Washington under the ESA. The USFWS is the lead regulatory agency for this listing under the ESA.

Critical Habitat

The Lake Washington Subbasin (HUC 17110012) is within Unit 28: Puget Sound and has been designated as bull trout critical habitat (50 CFR Part 17). However, Coal Creek was not included. The closest designated critical habitat is Lake Washington, which is approximately 0.9 mile downstream from the project area. Therefore, designated critical habitat for bull trout occurs at the downstream extent of the action area. PCEs of critical habitat are the known physical and biological features that are essential to the conservation of the species. The PCEs for bull trout are:

- permanent water of sufficient quantity and quality such that normal reproduction, growth, and survival are not inhibited;
- water temperatures that support bull trout use;
- complex stream habitat (LWD, side channels, pools, undercut banks);
- substrate of sufficient size, amount, and composition, to ensure egg, fry, young of the year, and juvenile survival;
- natural hydrograph with peak, high, low, and base flows within historic range;
- springs, seeps, groundwater sources, and subsurface water connectivity;
- migration corridors with minimum barriers between necessary habitats;
- abundant food base.

Habitat Requirements

Bull trout have several different life history strategies including resident, fluvial, adfluvial, or anadromous. Resident headwater populations tend to be isolated remnants of once more mobile populations and, as such, are more prone to extinction. Fluvial and adfluvial populations are typically associated with larger river and lake systems. Anadromous populations are very mobile, utilize marine waters for part of their adult life, and are more dependent on estuarine habitats for survival.

Bull trout are bottom dwellers that prefer deep pools of cold water rivers, lakes, and reservoirs. Adults typically spawn in fall; juveniles hatch in winter, emerge from the gravel substrate in spring, and remain in these tributary streams for one to three years before migrating back toward lakes, large rivers, or the ocean. Bull trout require cold water (maximum temperature approximately 13˚C [55˚F]) lakes or streams with clean cobble substrate and LWD cover (Rodrick and Milner 1991). Water temperatures rising above a seven-day average maximum of 8˚C (46˚F) are reported to limit spawning and rearing success for this species (USFWS 1998b; WDFW 1998). Bull trout are particularly sensitive to sedimentation because of their relatively long incubation and development phase (Fraley and Shepard 1989). The feeding habits of bull trout have been referred

to as opportunistic and adaptive. Adults are primarily piscivorous, but will also consume eggs, insects, snails, and leeches. Juvenile bull trout consume primarily macroinvertebrates.

Occurrence

Bull trout have occasionally been documented in Lake Washington and its associated tributaries, but the presence of a self-sustaining population of native char is limited to the Cedar River drainage above the Lower Cedar Falls at RM 34.2, including the Chester Morse Reserve. Within Lake Washington, documentation of bull trout is limited to one captured by an angler in April 1981, three near the Cedar River Delta during 1984 and 1985, two in Issaquah Creek in 1993, as well as a few additional isolated observations (King County DNR 2000). Stomach analyses indicated some of these bull trout were feeding on juvenile sockeye and smelt.

Bull trout have not been documented in Coal Creek, nor is suitable habitat present. In the Puget Sound region, the downstream limit of successful spawning always occurs upstream of the winter snowline (WDFW 1998). The project area is at an approximate elevation of 60 feet above sea level (ASL) and the headwaters are at an elevation of approximately 1160 feet ASL, which is below the winter snowline. Elevated stream temperatures and sediment deposition from past coal mining activities further negates the potential utilization of Coal Creek by bull trout. Stream temperatures reaching 73°F have been reported near the mouth of Coal Creek (Kerwin 2001).

4.3 Puget Sound Steelhead Trout

Federal Status

Puget Sound steelhead trout are listed as a threatened species in Washington under the ESA. The NMFS is the lead regulatory agency for this listing under the ESA.

Critical Habitat

The NMFS is currently reviewing critical habitat listing actions for steelhead trout. At this time, critical habitat for Puget Sound steelhead trout is neither designated nor proposed.

Habitat Requirements

Steelhead trout occur in two forms: the anadromous steelhead and the resident rainbow. The life histories of steelhead can vary considerably. Adult steelhead trout are divided into two races, depending on the time of year they enter freshwater: summer-run and winter-run. Winter-run steelhead are native to the Lake Washington Basin, while summer-run are not known to be present. Numerous plants of hatchery stocks have occurred. Wild steelhead in the Lake Washington Basin generally run from mid December to mid May and spawn from early March to mid June (WDFW 1994). After emergence from the gravel, steelhead fry are heavily dependent upon streamside vegetation and submerged cover for protection from predators. Juveniles spend one to four years in freshwater before migrating to sea. The outmigration generally occurs in the spring (April through June); most spend up to four years at maturing in the ocean before returning to their natal stream. Some return early and return as jacks, and some survive to spawn multiple times.

Occurrence

Steelhead trout have been documented in the mainstem and in a few tributaries of Coal Creek (Newcastle and 08-0273) (Tetra Tech/KCM 2005). Data from various electrofishing surveys conducted from 1996 through 2003 resulted in the capture of 572 “rainbow” trout, and 33 “trout” less than 80 mm (City of Bellevue unpublished data 2007). Note that it is impossible to tell the difference between juvenile rainbow trout that are ad-fluvial (lake rearing) and juvenile steelhead trout that are anadromous (saltwater rearing). Based on a review of steelhead trout juvenile and adult life-history data, it is assumed that juvenile steelhead trout could be present in the project area during construction and/or maintenance activities. This conclusion is based on the extended freshwater rearing exhibited by this species.

5.0 ESSENTIAL FISH HABITAT

The Magnuson-Stevens Fishery Conservation and Management Act, as amended by the Sustainable Fisheries Act of 1996, requires Federal agencies to consult with NMFS on activities that may adversely affect EFH. The Pacific Fisheries Management Council (PFMC) has designated EFH for the Pacific Salmon Fishery and federally managed groundfish and coastal pelagic fisheries (NOAA Fisheries 1999; PFMC 1999). Federal agencies must consult with NMFS on all activities authorized, funded, or undertaken by the agency that may adversely affect EFH. Project-related activities occur in a stream with salmonids. Therefore, this analysis addresses the Pacific Salmon Fishery, including Chinook, coho, and pink salmon. Federally managed groundfish and coastal pelagic fisheries do not occur in the action area and will not be addressed.

The EFH designation for the Pacific salmon fishery includes all those streams, lakes, ponds, wetlands, and other water bodies currently or historically accessible to salmon in Washington, Oregon, Idaho, and California, except above the impassible barriers identified by PFMC (1999). In the estuarine and marine areas, EFH for salmon extends from nearshore and tidal submerged environments within state territorial waters out to the full extent of the exclusive economic zone offshore of Washington, Oregon, and California north of Point Conception (PFMC 1999).

Use of the action area by federally managed salmon is limited. The most abundant species is coho salmon. Coho salmon have been documented upstream of the project area, could potentially spawn in the project area, and would rear in the project area. A few Chinook salmon have also been observed in Coal Creek, but use by this species is very limited. To date, documentation of Chinook salmon in Coal Creek has been limited to a few spawning downstream of the project area. However, as previously mentioned, there are no barriers between the project area and where Chinook salmon have been observed spawning. Therefore, Chinook salmon could potentially utilize the project area. Pink salmon have not been documented in Coal Creek.

6.0 IMPACT MINIMIZATION MEASURES

Potential impacts to water quality, habitat, or listed species could occur during either construction or maintenance activities. Impacts are primarily limited to temporary increases in turbidity or dewatering activities. Impacts associated with an increase in water temperature have been minimized through design. Temperature related impacts are considered temporary, localized, and

discountable. Potential water quality impacts can be reduced or avoided by implementation of the conservation and performance measures outlined below.

6.1 Conservation and Performance Measures

General

- A Temporary Erosion and Sediment Control (TESC) Plan will be developed and implemented.
- A qualified Erosion and Control Inspector will review all sediment control measures twice per week during construction. Qualified means the inspector will be a Certified Erosion and Sediment Control Lead (CESCL).
- Turbidity will be monitored per the City of Bellevue and Ecology requirements.
- A Spill Prevention Control and Countermeasures plan that meets Ecology standards will be developed and implemented for the project to ensure that all pollutants and products will be controlled and contained.
- Seasonal restrictions applied to work conducted below the ordinary high water mark (OHWM) will be as required by a project-specific Hydraulic Project Approval (HPA) issued by the WDFW.
- Construction impacts will be confined to the minimum area necessary to complete the project.
- Removal of riparian vegetation will be minimized as much as possible.
- Implementation of the Mitigation Plan outlined in **Appendix D** will occur.

Water Quality/Erosion Control

- All Best Management Practices (BMPs) will be installed according to City of Bellevue standards and will be inspected and maintained throughout the life of the project.
- Staging and soil stockpile areas will be limited to those outlined in the clearing and grading permit. Staging areas will be fenced.
- Spill kits will be kept on-site.
- Fuels and other potentially hazardous materials will be kept in a secured area. Secured means fenced, and locked during non-work hours.
- Secondary containment will be required for all hazardous materials. Spill containment is required for generators, parked equipment, porta-potty, fuels, solvents, etc.
- The project will comply with water quality conditions identified by Ecology.
- Wash water resulting from wash down of equipment or work areas will be contained for proper treatment and/or disposal, and will not be directly discharged into state waters.
- There will be no discharge of oil, fuels, or chemicals to surface waters, or onto land where there is a potential for reentry into surface waters.

- No cleaning solvents or chemicals used for tools or equipment cleaning will be discharged to ground or surface waters.
- The contractor will regularly check fuel hoses, oil drums, oil or fuel transfer valves, fittings, etc. for leaks, and will maintain and store materials properly to prevent spills.
- BMPs will be used on all project activities to control and prevent sediments from entering aquatic systems.

In-water and Over-water Work

- All fish will be removed from the work area prior to any in-water work activities per the Fish Salvage Plan in **Appendix E**.
- Materials removed from below the OHWM, will be placed in an upland location where they cannot enter water bodies.
- Materials, such as riprap and LWD, placed within the water, will be free of sediment and or other contaminants.
- Water pumped from work isolation areas will be treated to remove suspended sediments prior to returning to the water body. Discharge will occur in such a manner as not to cause erosion.
- Mechanical equipment will not enter the stream channel until the project area has been dewatered and fish salvage has been completed.
- Mechanical equipment operating in the project area will be inspected daily for leaks. Any equipment found to be leaking will immediately be fixed or removed from the project site.

Operational and Maintenance

- The pond will be inspected during and immediately after significant storm events.
- Prior to annual pond cleaning (sand removal), a city engineer and biologist will inspect the site to determine the level of required maintenance.
- A biologist will perform fish salvage activities as needed during maintenance.
- Turbidity levels will be monitored during maintenance.
- Pond maintenance will occur during the WDFW in-water work window.
- If for some unforeseen reason work on the pond must occur outside the approved in-water work window, these actions will be coordinated with the WDFW and Corps.

7.0 EFFECTS ANALYSIS

The proposed project includes clearing approximately 0.75 acre of land and will create 0.14 acre of impervious surface; and removing the existing house, structures, old cars, and accumulated debris. A total of 31 significant trees will be cleared as part of the project and 32 pieces of LWD will be placed in or immediately adjacent to Coal Creek within two log jams. Portions of the cleared area include stream buffer and wetland. The project will result in approximately 0.41 acre of permanent

buffer impact and 0.37 acre of temporary buffer impact. The project includes 0.02 acre of permanent wetland impact and 146 square feet of temporary wetland impact. Activities will also occur in Coal Creek resulting in approximately 0.14 acre of temporary impact, which includes work along the stream bank (inlet and outlet), bank logs, and installation of log grade control structures, weirs, and log jams. No impact to the unnamed tributary to Coal Creek that occurs to the north of the proposed pond will result from this project. The project includes a mitigation plan that addresses all project-related impacts. Mitigation is proposed to occur on- and off-site.

7.1 Effects to Salmonid Baseline Habitat Conditions

Based on project location, construction and maintenance related activities, as well as proposed mitigation measures, project effects to baseline habitat conditions would be variable over time. The implementation of the proposed minimization measures will further reduce potential impacts to listed species and their habitat. The following salmonid effects matrix has been developed to summarize potential project-related direct and indirect effects to baseline conditions (**Table 8**).

Table 8: Salmonid Habitat Project Effects Matrix

PATHWAY	INDICATORS	PROJECT EFFECTS TO BASELINE CONDITIONS
		Coal Creek
Water Quality	Temperature	Maintain -. Minor degradation will initially occur but this will likely be un-measurable and temporary. Some clearing of streamside vegetation will occur at the outlet but this should be off-set by mitigation plantings.
	Sediment	Improve. This improvement is based on the pond being off-line and designed to capture primarily sand. Implementation of TESC plan during construction and maintenance, implementation of a turbidity monitoring plan, and monitoring during construction and maintenance activities are also factored in to an assumed improved baseline condition.
	Chemical Contamination and Nutrients	Maintain +. A minor but probably un-measurable benefit could occur during flood events when mitigation plants interact with floodwaters.
Habitat Access	Physical Barriers	Maintain -. The project will not create fish passage barriers. Two in-stream weirs near the pond outlet each have a drop height of 0.8 feet.
Habitat Elements	Substrate	Improve. The potential removal of up to 1,500 cubic yards of sand will improve downstream substrate. The pond is designed to capture only sand and gravels will continue to move downstream during high water events.
	LWD	Improve. The project includes installation of two log jams with a total of approximately 32 pieces of LWD.
	Pool Frequency	Maintain. No measurable change to this indicator is anticipated.
	Pool Quality	Maintain. No measurable change to this indicator is anticipated.
	Off-Channel Habitat	Improve. The off-channel pond will be accessible at the outlet year-round and create new rearing habitat.
	Refugia	Improve. The off-channel pond will be accessible at the outlet year-round and create new rearing habitat. Furthermore, the pond will provide refugia during flood events when a portion of the overall flow is diverted into the off-channel pond.
Channel Conditions and Dynamics	Width/Depth Ratio	Maintain. No change to the existing width/depth ratio of Coal Creek is anticipated to occur as a result of this project.
	Streambank Condition	Degrade → Maintain. The stream bank in the project reach will be degraded during construction and this impact will continue until plants installed along the banks of the pond become established. Once established, this indictor will generally be maintained.
	Floodplain Connectivity	Improve. This indicator will be improved since the off-channel pond will act a side channel and is being constructed through uplands.

PATHWAY	INDICATORS	PROJECT EFFECTS TO BASELINE CONDITIONS
		Coal Creek
Flow/Hydrology	Change in Peak/Base Flows	Maintain. The pond would increase peak flow holding capacity during the fall and winter and therefore help attenuate flood events. Base flow is often influenced by the amount of permeable land available for infiltration. The project is removing some impervious area (existing structures) but also creating some (access roads). Although peak flow is improved no change to base flow is anticipated. Therefore, the overall effect is maintain.
	Increase in Drainage Network	Maintain. The proposed project is not creating typical drainage features although the off-channel pond "could" be considered part of a drainage network. For purposes of this analysis, no change in the increase in the drainage network indicator is anticipated to result from implementation of this project.
Watershed Conditions	Road Density and Location	Degrade. There will be a net increase in roadway so this indicator will be degraded.
	Disturbance History	Degrade → Maintain. Construction and yearly maintenance will result in an increase in the amount of disturbance to Coal Creek at the local scale. But the disturbance will temporary, seasonal, and of short duration.
	Riparian Reserve	Degrade → Maintain. The riparian reserve indicator in the project reach will be degraded during construction and this impact will continue until plants installed along the banks of the pond and stream channel become established. Once established, this indictor will generally be maintained.
Bull Trout Subpopulation Characteristics within Subpopulation Watersheds	Subpopulation Size	Maintain. No change in the subpopulation size indicator is anticipated.
	Growth and Survival	Maintain. No change in the growth and survival indicator is anticipated.
	Life History Diversity and Isolation	Maintain. No change in the life history diversity and isolation indicator is anticipated.
	Persistence and Genetic Integrity	Maintain. No change in the persistence and genetic integrity indicator is anticipated.
	Species Integration/Habitat Conditions	Maintain. No change in the species integration/habitat conditions indicator is anticipated.

Note: The presence of a + after **maintain** indicates a minor improvement and a – indicates a minor degradation of the indicator being assessed. The minor improvement or degradation was not considered significant enough to warrant changing the project effect determination to either improve or degrade.

Based on the anticipated effects to baseline conditions summarized above, several indicators will be *maintained* including temperature, chemical contamination and nutrients, physical barriers, pool frequency and quality, width/depth ratio, floodplain connectivity, change in peak/base flows, increase in drainage network, as well as all the bull trout subpopulation characteristics.

Indicators that are anticipated to improve include sediment, substrate, refugia, and floodplain connectivity. Indicators that could be *degraded* are limited to road density and location. However, some indicators may be initially degraded but shift to maintain after construction, including streambank condition, disturbance history, and riparian reserve.

Since the project proposes to clear existing riparian vegetation and is conducting in-water work, the primary potential impacts to listed salmonids include turbidity and sedimentation impacts, and impacts associated with fish salvage activities. This assumes listed salmonids are present in the action area during construction or maintenance.

7.2 Turbidity and Sedimentation Impacts

Vegetation clearing will result in exposed soils throughout the project area. Diverting flow around areas where in-water work is proposed (inlet and outlet) during construction could result in an initial flush of suspended material, temporarily increasing turbidity and sedimentation. Additional pulses of sediment could occur following the first major storm event that results in the off-line pond becoming activated. However, measures to reduce turbidity have been included in the design. A stream flow bypass system will be in place to dewater the sediment pond during maintenance activities for the life of the project. BMPs will be in place to minimize exposed soils in the adjacent uplands from entering Coal Creek.

Chinook salmon and steelhead trout spawning will not be impacted by the project as they will be absent during construction and maintenance, and the proposed project will remove more sediment from being transported downstream than what will occur during construction or maintenance. Furthermore, juvenile Chinook salmon will not be in the action area during either construction or maintenance. However, juvenile steelhead trout could be present during both construction and maintenance activities. Juvenile steelhead trout may be exposed to increased sediment and turbidity for short periods of time. Impacts resulting from this exposure include avoidance of the area, reduced feeding opportunity and efficiency, delayed migration, stress, and gill trauma. However, very few (if any) juvenile steelhead trout will be present in the action area during construction or maintenance activities.

7.3 Chinook Salmon Impacts

The following analysis is based on considering life-history stages of Chinook salmon in relationship to their use of Coal Creek.

Upstream migration of adults: Upstream migrants are anticipated to be present in Coal Creek during the months of October and November. Since the proposed pond is an off-line facility and the predominance of flow during storm events will be within the mainstem, no impact to upstream migrants is anticipated. The proposed off-line pond is at least 0.5 mile upstream of where Chinook salmon have been previously documented, but that is not conclusive evidence that they only utilize the lower reach.

Spawning: Construction of the off-line sediment pond will not eliminate any potential existing spawning habitat in the project reach. The constructed pond will not result in the creation of new suitable spawning habitat since the substrate will be dominated by sand and coal cinders. The off-line pond is designed to only capture sand and silts, and gravels moving downstream will not be intercepted. The project will reduce the amount of sand and silt in spawning gravels downstream of the project area.

Rearing: Rearing includes downstream and upstream movement, short-term rearing in Coal Creek, predation, and availability of refugia and prey items (macroinvertebrates). Downstream migration of juvenile salmonids will not be impacted by the proposed project. Most of the flow will be within Coal Creek even during major storm events. Should any downstream migrants be swept into the pond, they should be able to exit through the outlet as it has been designed to allow fish movement. The off-line sediment pond has also been designed to allow for juvenile rearing

and refugia, which is a beneficial aspect of this project. As previously noted, the primary potential impact to juvenile salmonids is injury or death during dewatering activities. However, it is highly unlikely juvenile Chinook salmon will be present in the action area during construction.

7.4 Steelhead Trout Impacts

The impacts to Chinook salmon described in **Section 7.3** would be similar to those for steelhead trout. However, construction and maintenance activities have the potential to impact juvenile steelhead trout due to their extended rearing in freshwater. This is primarily due to dewatering activities that would require the capture and removal of any juveniles in the project area, should they be present during construction or maintenance activities. A fish removal plan is presented in **Appendix E** that has been designed to minimize potential impacts to juvenile salmonids during construction or maintenance. The implementation of BMPs, buffer mitigation, LWD, and additional plans (e.g., dewatering plan and turbidity monitoring plan) will further reduce impacts to this species.

7.5 Bull Trout Impacts

No impacts to bull trout are anticipated due to their assumed absence and lack of suitable habitat in the action area.

7.6 Interrelated and Interdependent Actions

An interrelated action is part of a larger action and depends on the larger action for its justification. An interdependent action has no utility apart from the project.

In 2005, the City of Bellevue prepared the *Coal Creek Stabilization Program Draft Environmental Impact Statement* (EIS) in order to investigate different potential alternatives to mitigate for excessive erosion in Coal Creek and the subsequent transport of sediment along the creek to Lake Washington (Tetra Tech/KCM 2005). The EIS investigated three alternatives, including the no-action alternative. Alternative 1 emphasized projects that target source control and Alternative 2 emphasized in-stream sediment control. The preferred and selected alternative was Alternative 1, which included streambank and hill slope stabilization in the reach downstream of Lakemont Boulevard, bed grade control structures, and a new sediment pond near I-405. The original concept to construct an in-line sediment pond near I-405 was abandoned due to agency and tribal environmental-related concerns. The project specifically addressed in this BA is an off-line sediment pond upstream of where the proposed in-line pond was to be constructed. The streambank and hill slope stabilization and new bed grade control structures near Lakemont Boulevard would be located several miles upstream of the proposed sediment pond and are being permitted separately through the Corps. The streambank and hill slope stabilization project will require dewatering several sections of stream during construction. Impacts associated with the upstream project include primarily impacts to individual fish removed during dewatering, and sedimentation and turbidity during or immediately after construction.

8.0 DETERMINATION OF EFFECTS

The following section outlines the effect determination for all species, critical habitat, and essential fish habitat previously described in this report. The rationale for each determination is also summarized.

8.1 Chinook Salmon

The proposed project **may affect but is not likely to adversely affect** Chinook salmon. The project **may affect** Chinook salmon because:

- Chinook salmon have been documented in Coal Creek.
- In-water work is proposed.

The project **is not likely to adversely affect** Chinook salmon because:

- In-water work will occur when it is least likely juvenile Chinook salmon would be present.
- In-water work will occur when adult Chinook salmon will not be present.
- The project site is located upstream of where Chinook salmon have been documented.

8.2 Chinook Salmon Designated Critical Habitat

The proposed project **may affect but is not likely to adversely affect** Chinook salmon critical habitat. The project **may affect** Chinook salmon critical habitat because:

- Designated critical habitat occurs approximately 1.4 miles downstream of the project area.

The project **is not likely to adversely affect** Chinook salmon critical habitat because:

- The proposed project will reduce the sediment load in Coal Creek and thereby reduce the amount of sediment reaching potential spawning habitat downstream of the project area.
- The proposed off-line sediment pond will not capture gravels.
- Impacts to designated critical habitat are limited to a reduction of sediment at the delta or mouth of Coal Creek.

8.3 Bull Trout

The proposed project will have **no effect** on bull trout because of the following:

- Bull trout do not occur in the action area.
- Suitable habitat is not present in Coal Creek.
- Fish salvage will occur per the attached plan.
- Work will occur during the approved WDFW in-water work window.

8.4 Bull Trout Critical Habitat

The proposed project **may affect but is not likely to adversely affect** bull trout critical habitat. The project **may affect** bull trout critical habitat because:

- Designated critical habitat occurs approximately 1.4 miles downstream of the project area.

The project **is not likely to adversely affect** bull trout critical habitat because:

- Impacts to designated critical habitat are limited to a reduction of sediment at the delta or mouth of Coal Creek.
- Coal Creek is not considered critical or suitable habitat.

8.5 Puget Sound Steelhead Trout

The proposed project **may affect but is not likely to adversely affect** steelhead trout. The project **may affect** steelhead trout because:

- In-water work is proposed.
- Steelhead trout have been documented in Coal Creek.

The project **is not likely to adversely affect** steelhead because:

- Steelhead trout are very rare within the basin.
- In-water work will occur when adult steelhead trout will not be present.
- Fish salvage will occur per the attached plan.
- Work will occur during the approved WDFW in-water work window.

8.6 Essential Fish Habitat

The proposed project will have **no adverse effect** on EFH for Pacific salmon because of the following:

- The facility is off-line and all impacts within the channel are temporary.
- No existing habitat will be adversely impacted by the proposed project.
- The proposed project will create additional rearing and refugia habitat.
- Fish salvage will occur per the attached plan.
- Work will occur during the approved WDFW in-water work window.
- The proposed project will reduce the sediment load in Coal Creek and thereby reduce the amount of sediment reaching potential spawning habitat downstream of the project area.
- The proposed off-line sediment pond will not capture gravels.

9.0 REFERENCES

City of Bellevue. 2007. Unpublished data. E-mail with Kit Paulsen, Bellevue Utilities. Bellevue, Washington.

Cooke, Sarah Spear. 1997. *A Field Guide to the Common Wetland Plants of Western Washington & Northwestern Oregon*. Seattle Audubon Society. Seattle, Washington.

Environmental Protection Agency (EPA). 2001. *Draft – EPA Region 10 Guidance for State and Tribal Temperature Water Quality Standards*. Environmental Protection Agency.

Fraley, J., and B.B. Shepard. 1989. *Life History, Ecology, and Population Status of Migratory Bull Trout (Salvelinus confluentus) in the Flathead Lake and River System, Montana.* Northwest Science 63(4): 133-143.

Hitchcock, C.L., and A. Cronquist, 1973. *Flora of the Pacific Northwest*. University of Washington Press, Seattle, Washington.

Jensen, Bruce, City of Bellevue Project Manager. 2007. Personal communication.

Jobling, M. 1981. *Temperature Tolerance and the Final Preferendum – Rapid Methods for the Assessment of Optimum Growth Temperatures.* In: Sullivan, K.; K.J. Martin; R.D. Cardwell; J.E. Toll; S. Duke. 2000. *An Analysis of the Effects of Temperature on Salmonids of the Pacific Northwest With Implication for Selecting Temperature Criteria.* Sustainable Ecosystems Institute. Portland, Oregon.

Jones & Stokes. 2008. Wetland and Stream Delineation – McIntosh Parcels. Prepared for the City of Bellevue. Dated April 23, 2008.

Kerwin, J. 2001. *Salmon and Steelhead Habitat Limiting Factors Report for the Cedar – Sammamish Basin (Watershed Water Resource Inventory Area 8).* Washington State Conservation Commission. Olympia, Washington.

King County. 1994. *Water Quality of Small Lakes and Streams.* Western King County. 1990-1993.

King County and the City of Bellevue. 1986. Coal Creek Basin Plan.

King County Department of Natural Resources. 2000. Literature Review and Recommended Sampling Protocol for Bull Trout in King County. Seattle, Washington. June, 2000.

National Oceanic and Atmospheric Administration (NOAA Fisheries). 1999. Federal Register, National Oceanic and Atmospheric Administration, 50 CFR Part 660. Department of Commerce, Washington D.C.

———. 1996. *Making Endangered Species Act Determinations of Effect for Individual or Grouped Actions at the Watershed Scale*. National Marine Fisheries Service, Environmental and Technical Services Division, Habitat Conservation Branch. Lacey, Washington.

Pacific Fisheries Management Council (PFMC). 1999. Amendment 14 to the Pacific Coast Salmon Plan. "Appendix A. Identification and Description of Essential Fish Habitat, Adverse Impacts, and Recommended Conservation Measures for Salmon. Pacific Fisheries Management Council." Portland, Oregon.

Pojar, J., and A. MacKinnon. 1994. *Plants of the Pacific Northwest Coast*. B.C. Ministry of Forests and Lone Pine Publishing. Redmond, Washington.

Rodrick and Milner (technical editors). 1991. *Management Recommendations for Washington's Priority Habitats and Species.* Washington Department of Wildlife. Olympia, Washington.

Sullivan, K.; D.J. Martin; R.D. Cardwell; J.E. Toll; S. Duke. 2000. *An Analysis of the Effects of Temperature on Salmonids of the Pacific Northwest with Implication for Selecting Temperature Criteria*. Sustainable Ecosystems Institute. Portland, Oregon.

Tetra Tech/KCM. 2005. *Coal Creek Stabilization Program Draft Environmental Impact Statement – Volumes I and II*. Prepared for the City of Bellevue, Department of Utilities. November.

U.S. Fish and Wildlife Service (USFWS). 2000. *Recovery Plan for the Golden Paintbrush (Castilleja levisecta).* U.S. Fish and Wildlife Service, Portland, Oregon. 51 pp.

———. 1998a. *Recovery Plan for Marsh Sandwort (Arenaria paludicola) and Gambel's Watercress (Rorippa gambelii).* U.S. Fish and Wildlife Service, Portland, Oregon. 50 pp. + appendices.

———.1998b. *A Framework to Assist in Making Endangered Species Act Determinations of Effect for Individual or Grouped Actions at the Bull Trout Subpopulation Watershed Scale*. Lacey, Washington.

Washington Department of Fish and Wildlife (WDFW). 2007. Priority Habitats and Species (PHS) Program Data. Olympia, Washington.

———. 1998. *Washington State Salmonid Stock Inventory. Appendix: Bull Trout and Dolly Varden*. Olympia, Washington.

Washington Department of Fish and Wildlife (WDFW) and Western Washington Treaty Indian Tribes. 1994. *1992 Washington State Salmon and Steelhead Stock Inventory.* "Appendix One: Puget Sound Stocks." Olympia, Washington.

———. 2002. *2002 Washington State Salmon and Steelhead Stock Inventory*. "Appendix One: Puget Sound Stocks." Olympia, Washington.

Washington State Department of Ecology (Ecology). 2001. *Stormwater Management Manual for Western Washington*. Olympia, Washington.

———. 2005. 2004 Water Quality Assessment (Final) – Category 5 Listings for WRIA 8. http://www.ecy.wa.gov/programs/wq/303d/2002/2004_documents/wria_pdfs-5final/kk-active-5-wria8.pdf

Washington State Department of Natural Resources (WDNR). 2009. *Sections that Contain Natural Heritage Features Associated with Wetlands.* WDNR Washington Natural Heritage Program.

Washington State Department of Transportation (WSDOT). 2006. *I-405 Renton to Bellevue Project, State Route 169 to Interstate 90 Environmental Assessment* – Appendix X: Fish and Aquatic Resources Discipline Report

———. 2004. *Highway Runoff Manual*.

Williams, R.W., R.M. Laramie, and J.J. Ames. 1975. *A Catalog of Washington Streams and Salmon Utilization, Vol. 1, Puget Sound Region.* Washington Department of Fisheries, Olympia, Washington.

This page intentionally left blank.

APPENDIX A

NMFS In-line Pond Informal Consultation Letter

This page intentionally left blank.

UNITED STATES DEPARTMENT OF COMMERCE
National Oceanic and Atmospheric Administration
NATIONAL MARINE FISHERIES SERVICE
Northwest Region
7600 Sand Point Way N.E., Bldg. 1
Seattle, WA 98115

NMFS Tracking No.:
2007/05968

October 5, 2007

Michelle Walker
Chief, Regulatory Branch
Seattle District, Corps of Engineers
P.O. Box 3755
Seattle, WA 98124-3755

RE: Endangered Species Act Section 7 Informal Consultation and Magnuson-Stevens Fishery Conservation and Management Act Essential Fish Habitat Consultation for the Lower Coal Creek Sediment Pond Project, City of Bellevue, King County, WA. HUC 1711001120302
COE Reference No.: NWS-2007-1127-NO

Dear Ms. Walker:

This letter is in response to your request for Section 7 consultation under the Endangered Species Act (ESA) on Puget Sound Chinook salmon (*Oncorhynchus tshawytscha)* and Puget Sound steelhead (*O. mykiss*), ESA threatened. Additionally, this letter serves to meet the requirements for consultation under the Magnuson-Stevens Fishery Conservation and Management Act (MSA).

Endangered Species Act

The National Marine Fisheries Service (NMFS) has reviewed the July 20, 2007 Biological Assessment (BA) and your August 31, 2007 Memorandum for the Services (MFS) for the Lower Coal Creek Sediment Pond Project. This consultation with the U.S. Army Corps of Engineers (COE) is conducted under section 7(a)(2) of the ESA, and its implementing regulations, 50 CFR Part 402.

The project area is within the City of Bellevue on lower Coal Creek east of Interstate 405, south of Coal Creek Parkway, King County, Washington. The action area is at approximately river mile (RM) 0.9 and within a ½ mile radius around the project area.

This is one of a number of legally mandated projects undertaken by the City of Bellevue to reduce the amount of sediment that accumulates at the delta of Coal Creek at Newport Shores on Lake Washington. The Coal Creek Stabilization Program is attempting to: (1) reduce sediment supply to Coal Creek and Lake Washington to a level expected for an undisturbed or natural condition; (2) stabilize the Coal Creek system to ensure the success of future restoration efforts; (3) minimize the potential for flooding that may be associated with excessive sedimentation; and, (4) improve water quality by minimizing erosion and sediment transport.

Printed on Recycled Paper

This project proposes to: construct a long, linear (260' X 54', total footprint 0.6 acre) sedimentation pond within the channel of Coal Creek; construct six new weir structures, two upstream and four downstream of the pond; construct a new access road and stream flow bypass system at the downstream end of the pond; incorporate large woody debris (LWD) into the pond and plant native vegetation along the banks of the pond; and conduct annual maintenance to remove accumulated sediment from the pond.

Additional project detail can be found in the BA and in the MFS. To minimize potential negative effects on Chinook and steelhead, all appropriate BMPs as noted in the BA shall be followed, including: limit in-water work to July 1 – August 31 when aquatic species are at least risk; apply standard BMPs to prevent contaminant spills; new riparian plantings will be monitored, and replanted as necessary, for a minimum of 3 years following project completion; electrofishing shall be used only if other exclusion methods such as minnow traps, seines and dip nets prove ineffective, and then only by properly trained and experienced professional biologists following NMFS protocols (NMFS 2000).

Species Determination, Puget Sound Chinook salmon

While adult Chinook salmon (hatchery strays) have been documented spawning in Coal Creek downstream of the project site, no Chinook salmon will be in the creek during the construction window of July 1 through August 31. Potential effects to this species are discountable. NMFS has determined that the project "may affect, not likely to adversely affect" Puget Sound Chinook salmon.

Critical Habitat Determination, Puget Sound Chinook salmon

The final rule designating critical habitat for Puget Sound Chinook salmon was published on September 2, 2005 (70 FR 52630) and became effective on January 2, 2006. Critical habitat includes the lower portion of Coal Creek within the ordinary high water line defined for Lake Washington (33 CFR 319.11), which is outside of the project action area. Therefore, no-effects on critical habitat.

Species Determination, Puget Sound steelhead

Puget Sound steelhead may be present year-round in the action area, depending upon flow, water quality and other variables. The lower mile of Coal Creek suffers from degraded habitat conditions due to urbanization, Interstate 405 and residual effects of coal mining. Buchanan (WDFW, August 2003) found very poor physical habitat and water quality in this section of Coal Creek, and he noted no fish presence. Though small numbers of steelhead are known to utilize Coal Creek for spawning and rearing, this occurs primarily above the project action area.

The Fish Salvage Plan in the BA calls for electrofishing each year when pond maintenance occurs. Electrofishing, even when conducted by trained professional biologists, can have adverse affects on fish and can result in mortalities. Because no fish are expected in the action area during construction and maintenance activities, including fish exclusion, NMFS has determined that project affects to this species are insignificant and therefore this project "may affect, not

likely to adversely affect" Puget Sound steelhead. NMFS recommends that all fish handled during fish exclusion activities be documented as to species, size and condition upon release. Should juvenile steelhead be present during annual maintenance activities, and particularly during fish exclusion, the COE must contact NMFS to reinitiate consultation.

This concludes informal consultation on this proposed action in accordance with 50 CFR 402.14(b)(1). The COE must reinitiate this ESA consultation if: (1) new information reveals effects of the action that may affect listed species in a way not previously considered; (2) new information reveals the action causes an effect to listed species that was not previously considered; or (3) a new species is listed or critical habitat designated that may be affected by the identified actions.

Magnuson-Stevens Fishery Conservation and Management Act

Federal agencies are required, under section 305(b)(2) of the MSA and its implementing regulations (50 CFR 600 Subpart K), to consult with NOAA Fisheries regarding actions that are authorized, funded, or undertaken by that agency that may adversely affect Essential Fish Habitat (EFH). The MSA section 3 defines EFH as "those waters and substrate necessary to fish for spawning, breeding, feeding, or growth to maturity". If an action would adversely affect EFH, the COE is required to provide the Federal action agency with EFH conservation recommendations (MSA section 305(b)(4)(A)). This consultation is based, in part, on information provided by the Federal action agency and descriptions of EFH for Pacific salmon contained in Appendix A to Amendment 14 to the Pacific Coast Salmon Plan (August 1999) developed by the Pacific Fishery Management Council and approved by the Secretary of Commerce (September 27, 2000).

The proposed action and action area are described in this letter, in the BA and in the MFS. The action area includes habitat which has been designated as EFH for various life stages of Chinook salmon (*Oncorhynchus tshawytscha*) and coho salmon (*O. kisutch*).

EFH Conservation Recommendations: Coho salmon are the predominant anadromous salmonid in Coal Creek, and juveniles reside in the creek year around. Converting approximately 340 feet of stream and wetland habitat to a sediment pond effectively eliminates low gradient spawning and rearing habitat. Also, it is anticipated that as the pond fills with sediment each year it can cause sheet flow across the pond and cause temporary impassable conditions at low flows for periods of weeks or months. To mediate these potential adverse effects, NMFS offers the following EFH conservation recommendations pursuant to Section 305(b)(4)(A) of the Magnuson-Stevens Act:

1) The pond shall be monitored for impassable conditions and attempts made to keep a passable channel open at all times. NMFS staff are prepared to provide technical assistance for fish passage designs.
2) The ponds should be monitored for seasonal use by juvenile and adult salmonids. The COE should work with the City, WDFW, and the Muckleshoot Tribe to plan this effort.

3) All fish handled during fish exclusion activities shall be documented as to species, size and condition upon release.

A 30-day response from the COE is required (MSA section 305(b)(4)(B)).

This concludes consultation under the MSA. If the proposed action is modified in a manner that may adversely affect EFH, or if new information becomes available that affects the basis for NMFS' EFH conservation recommendations, the COE will need to reinitiate EFH consultation with NMFS in accordance with implementing regulations for EFH at 50 CFR 600.920(k).

The efforts of the COE and the City of Bellevue to design this project to minimize environmental impacts on listed species are appreciated. If you have any questions, please contact Randy McIntosh at 360-534-9309 or randy.mcintosh@noaa.gov.

Sincerely,

for D. Robert Lohn
Regional Administrator

cc: Ms. Amy Klein, COE
Ms. Alisa Bieber, WDFW
Ms. Karen Walter, Muckleshoot
Ms. Kit Paulsen, City of Bellevue

APPENDIX B

NMFS Species List

This page intentionally left blank.

Endangered Species Act Status of West Coast Salmon & Steelhead

(Updated July 1, 2009)

Species[1]			*Current Endangered Species Act Listing Status*[2]	*ESA Listing Actions Under Review*
Sockeye Salmon (*Oncorhynchus nerka*)	1	Snake River	***Endangered***	
	2	Ozette Lake	***Threatened***	
	3	Baker River	*Not Warranted*	
	4	Okanogan River	*Not Warranted*	
	5	Lake Wenatchee	*Not Warranted*	
	6	Quinalt Lake	*Not Warranted*	
	7	Lake Pleasant	*Not Warranted*	
Chinook Salmon (*O. tshawytscha*)	8	Sacramento River Winter-run	***Endangered***	
	9	Upper Columbia River Spring-run	***Endangered***	
	10	Snake River Spring/Summer-run	***Threatened***	
	11	Snake River Fall-run	***Threatened***	
	12	Puget Sound	***Threatened***	
	13	Lower Columbia River	***Threatened***	
	14	Upper Willamette River	***Threatened***	
	15	Central Valley Spring-run	***Threatened***	
	16	California Coastal	***Threatened***	
	17	Central Valley Fall and Late Fall-run	***Species of Concern***	
	18	Upper Klamath-Trinity Rivers	*Not Warranted*	
	19	Oregon Coast	*Not Warranted*	
	20	Washington Coast	*Not Warranted*	
	21	Middle Columbia River spring-run	*Not Warranted*	
	22	Upper Columbia River summer/fall-run	*Not Warranted*	
	23	Southern Oregon and Northern California Coast	*Not Warranted*	
	24	Deschutes River summer/fall-run	*Not Warranted*	
Coho Salmon (*O. kisutch*)	25	Central California Coast	***Endangered***	
	26	Southern Oregon/Northern California	***Threatened***	
	27	Lower Columbia River	***Threatened***	• Critical habitat
	28	Oregon Coast	***Threatened***	
	29	Southwest Washington	*Undetermined*	
	30	Puget Sound/Strait of Georgia	***Species of Concern***	
	31	Olympic Peninsula	*Not Warranted*	
Chum Salmon (*O. keta*)	32	Hood Canal Summer-run	***Threatened***	
	33	Columbia River	***Threatened***	
	34	Puget Sound/Strait of Georgia	*Not Warranted*	
	35	Pacific Coast	*Not Warranted*	
Steelhead (*O. mykiss*)	36	Southern California	***Endangered***	
	37	Upper Columbia River	***Threatened***	
	38	Central California Coast	***Threatened***	
	39	South Central California Coast	***Threatened***	
	40	Snake River Basin	***Threatened***	
	41	Lower Columbia River	***Threatened***	
	42	California Central Valley	***Threatened***	
	43	Upper Willamette River	***Threatened***	
	44	Middle Columbia River	***Threatened***	
	45	Northern California	***Threatened***	
	46	Oregon Coast	***Species of Concern***	
	47	Southwest Washington	*Not Warranted*	
	48	Olympic Peninsula	*Not Warranted*	
	49	Puget Sound	***Threatened***	• Critical habitat
	50	Klamath Mountains Province	*Not Warranted*	
Pink Salmon (*O. gorbuscha*)	51	Even-year	*Not Warranted*	
	52	Odd-year	*Not Warranted*	

1 The ESA defines a "species" to include any distinct population segment of any species of vertebrate fish or wildlife. For Pacific salmon, NOAA Fisheries Service considers an evolutionarily significant unit, or "ESU," a "species" under the ESA. For Pacific steelhead, NOAA Fisheries Service has delineated distinct population segments (DPSs) for consideration as "species" under the ESA.

APPENDIX C

USFWS Species List

This page intentionally left blank.

LISTED AND PROPOSED ENDANGERED AND THREATENED SPECIES AND CRITICAL HABITAT; CANDIDATE SPECIES; AND SPECIES OF CONCERN IN KING COUNTY AS PREPARED BY THE U.S. FISH AND WILDLIFE SERVICE WESTERN WASHINGTON FISH AND WILDLIFE OFFICE

(Revised November 1, 2007)

LISTED

Bull trout (*Salvelinus confluentus*)

Canada lynx (*Lynx canadensis*)

Gray wolf (*Canis lupus*)

Grizzly bear (*Ursus arctos = U. a. horribilis*)

Marbled murrelet (*Brachyramphus marmoratus*)

Northern spotted owl (*Strix occidentalis caurina*)

Major concerns that should be addressed in your Biological Assessment of project impacts to listed species include:

1. Level of use of the project area by listed species.

2. Effect of the project on listed species' primary food stocks, prey species, and foraging areas in all areas influenced by the project.

3. Impacts from project activities and implementation (e.g., increased noise levels, increased human activity and/or access, loss or degradation of habitat) that may result in disturbance to listed species and/or their avoidance of the project area.

Castilleja levisecta (golden paintbrush) [historic]

Major concerns that should be addressed in your Biological Assessment of project impacts to listed plant species include:

1. Distribution of taxon in project vicinity.

2. Disturbance (trampling, uprooting, collecting, etc.) of individual plants and loss of habitat.

3. Changes in hydrology where taxon is found.

DESIGNATED

Critical habitat for bull trout

Critical habitat for the marbled murrelet

Critical habitat for the northern spotted owl

PROPOSED

None

CANDIDATE

Oregon spotted frog (*Rana pretiosa*)
Yellow-billed cuckoo (*Coccyzus americanus*)

SPECIES OF CONCERN

Bald eagle (*Haliaeetus leucocephalus*)
Beller's ground beetle (*Agonum belleri*)
California wolverine (*Gulo gulo luteus*)
Cascades frog (*Rana cascadae*)
Hatch's click beetle (*Eanus hatchi*)
Larch Mountain salamander (*Plethodon larselli*)

Long-eared myotis (*Myotis evotis*)
Long-legged myotis (*Myotis volans*)
Northern goshawk (*Accipiter gentilis*)
Northern sea otter (*Enhydra lutris kenyoni*)
Northwestern pond turtle (*Emys* (= *Clemmys*) *marmorata marmorata*)
Olive-sided flycatcher (*Contopus cooperi*)
Pacific lamprey (*Lampetra tridentata*)
Pacific Townsend=s big-eared bat (*Corynorhinus townsendii townsendii*)
Peregrine falcon (*Falco peregrinus*)
River lamprey (*Lampetra ayresi*)
Tailed frog (*Ascaphus truei*)
Valley silverspot (*Speyeria zerene bremeri*)
Western toad (*Bufo boreas*)
Aster curtus (white-top aster)
Botrychium pedunculosum (stalked moonwort)
Cimicifuga elata (tall bugbane)

APPENDIX D

Design and Mitigation Drawings

This page intentionally left blank.

SECTION 16	TOWNSHIP 24N	RANGE 5E	LAT 47°33'46.00" N, LONG 122°10'17.00" W

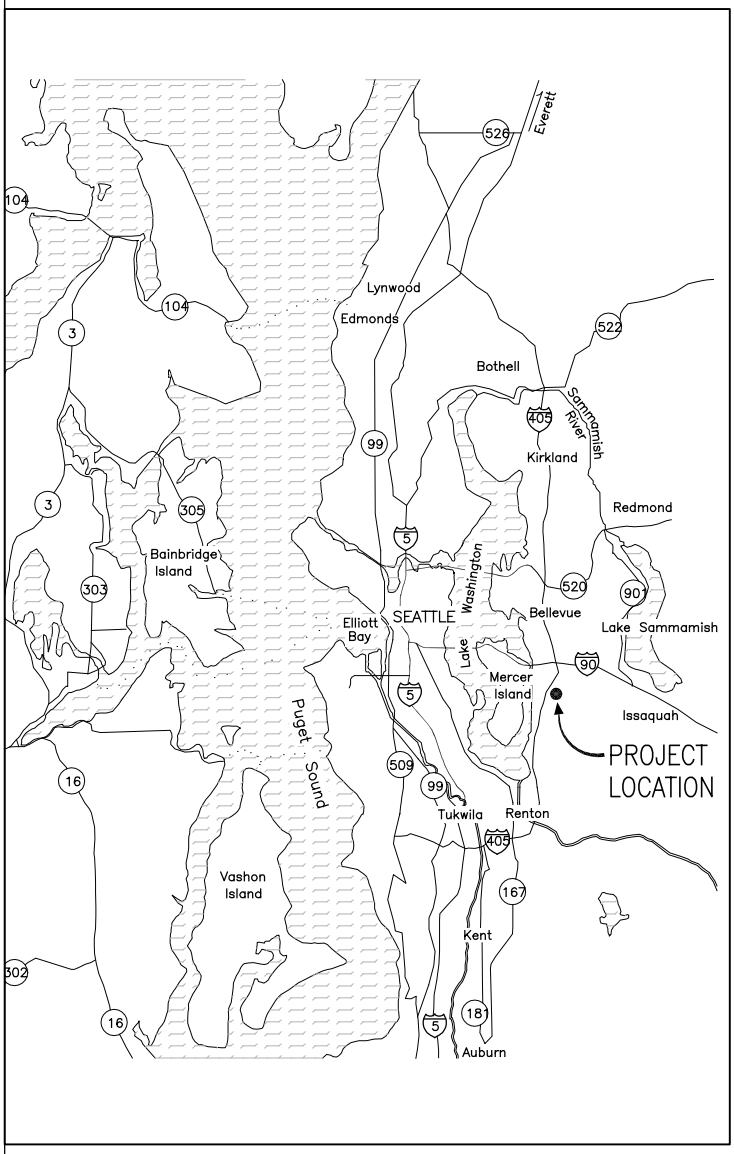

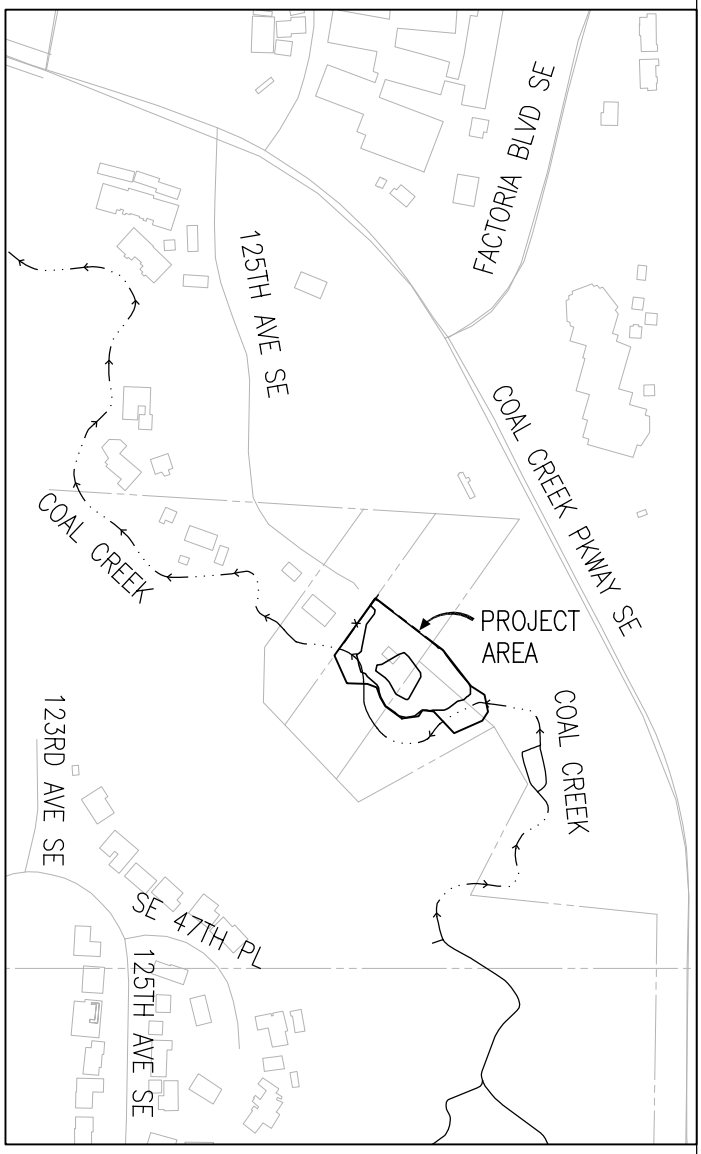

LOCATION MAP

APPROMXIMATE SCALE :
1" = 8 MILES

1"=8 mi 4 0 4 8
Scale Miles

VICINITY MAP

SCALE: 1" = 400'

1"=400' 200 0 200 400
Scale Feet

PROJECT NAME: LOWER COAL CREEK OFF-LINE SEDIMENTATION POND

PURPOSE: SEDIMENT REMOVAL

DATUM: NAVD 88

REFERENCE NO.: N/A

COUNTY OF: KING

WATER BODY: COAL CREEK

PROJECT LOCATION MAPS

SITE LOCATION ADDRESS: 4641 125TH AVE SE
BELLEVUE, WA 98006

APPLICATION BY: CITY OF BELLEVUE

DATE:

LEGEND

SYMBOL EXISTING	DESCRIPTION
C	CEDAR TREE
P	PINE TREE
A	ALDER TREE
AP	APPLE TREE
F	FIR TREE
M	MAPLE TREE
COT	COTTONWOOD TREE
	FIRE HYDRANT
	WATER VALVE
	SANITARY SEWER MANHOLE
	MISCELLANEOUS MANHOLE
	TELECOM DEVICE
	UTILITY POLE
	WETLAND FLAG
	WETLAND
	PROPERTY BOUNDARY
	CREEK CENTERLINE
	WETLAND BOUNDARY
SS	SANITARY SEWER (EXIST)
P	OVERHEAD POWER (EXIST)
	ORDINARY HIGH WATER MARK (OHWM)
	ROCKERY (EXIST)

SYMBOL PROPOSED	DESCRIPTION
	LOG JAM WITH ROOTWADS
	LOG
	MANHOLE
	BOULDER
	REMOVAL
	CONSTRUCTION LIMITS
	STREAMBED GRAVEL
	CONCRETE
	CRUSHED SURFACING TOP COURSE

PROJECT NAME: LOWER COAL CREEK OFF-LINE SEDIMENTATION POND

PURPOSE: SEDIMENT REMOVAL

DATUM: NAVD 88

REFERENCE NO.: N/A

COUNTY OF: KING

WATER BODY: COAL CREEK

LEGEND

SITE LOCATION ADDRESS: 4641 125TH AVE SE BELLEVUE, WA 98006

APPLICATION BY: CITY OF BELLEVUE

DATE:

ABBREVIATIONS

APPROX	APPROXIMATE
AVG	AVERAGE
CHAN	CHANNEL
CL	CENTERLINE
COB	CITY OF BELLEVUE
CY, CU YD	CUBIC YARD
DIA, DIAM	DIAMETER
E	EAST
EL, ELEV	ELEVATION
EXIST, EX	EXISTING
GC	GRADE CONTROL LOG
HORIZ	HORIZONTAL
IE	INVERT ELEVATION
LWD	LARGE WOODY DEBRIS
MAX	MAXIMUM
MH	MANHOLE
MIN	MINIMUM
N	NORTH
NE	NORTHEAST
NTS	NOT TO SCALE
NW	NORTHWEST
OHWM	ORDINARY HIGH WATER MARK
PCD	PLANNING AND COMMUNITY DEVELOPMENT
PVC	POLYVINYL CHLORIDE
S	SOUTH, SLOPE
SD	STORM DRAIN
SE	SOUTHEAST
SHT	SHEET
SS	SANITARY SEWER
SSMH	SANITARY SEWER MANHOLE
STA	STATION
ST	STREET
SW	SOUTHWEST
TYP	TYPICAL
VERT	VERTICAL
W	WEST, WATER
WSEL	WATER SURFACE ELEVATION

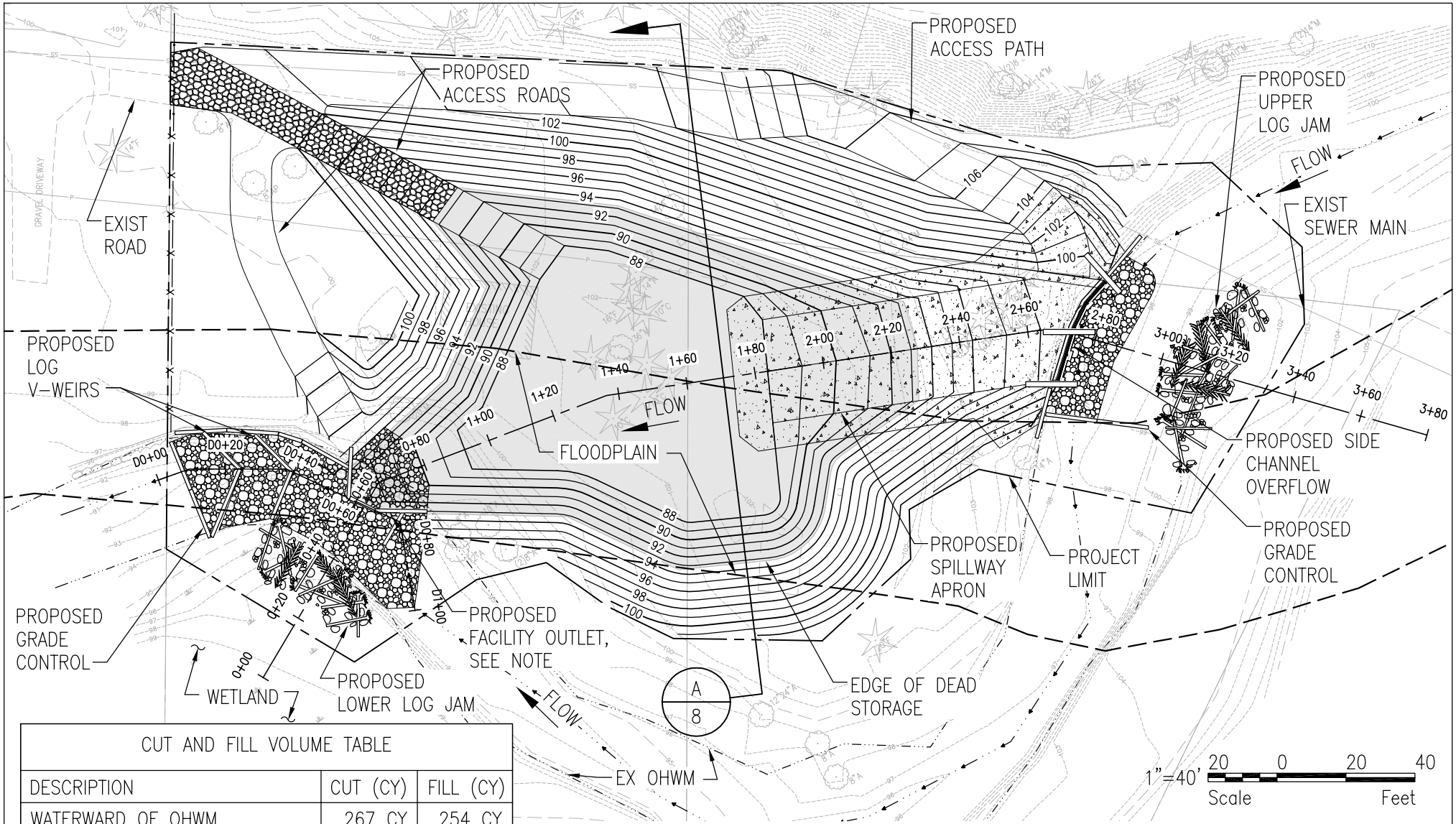

CUT AND FILL VOLUME TABLE		
DESCRIPTION	CUT (CY)	FILL (CY)
WATERWARD OF OHWM	267 CY	254 CY
OUTSIDE WATERWARD OF OHWM	7670 CY	292 CY
TOTAL	7937 CY	546 CY

NOTE: FACILITY OUTLET TO BE MAINTAINED AS FISH PASSABLE AS LONG AS THERE IS FLOW IN COAL CREEK.

PLAN

SCALE: 1" = 40'

PROJECT NAME: LOWER COAL CREEK OFF-LINE SEDIMENTATION POND PURPOSE: SEDIMENT REMOVAL DATUM: NAVD 88	REFERENCE NO.: N/A COUNTY OF: KING WATER BODY: COAL CREEK	SITE LOCATION ADDRESS: 4641 125TH AVE SE BELLEVUE, WA 98006	OVERALL SITE PLAN APPLICATION BY: CITY OF BELLEVUE DATE: SHEET 4 OF 32

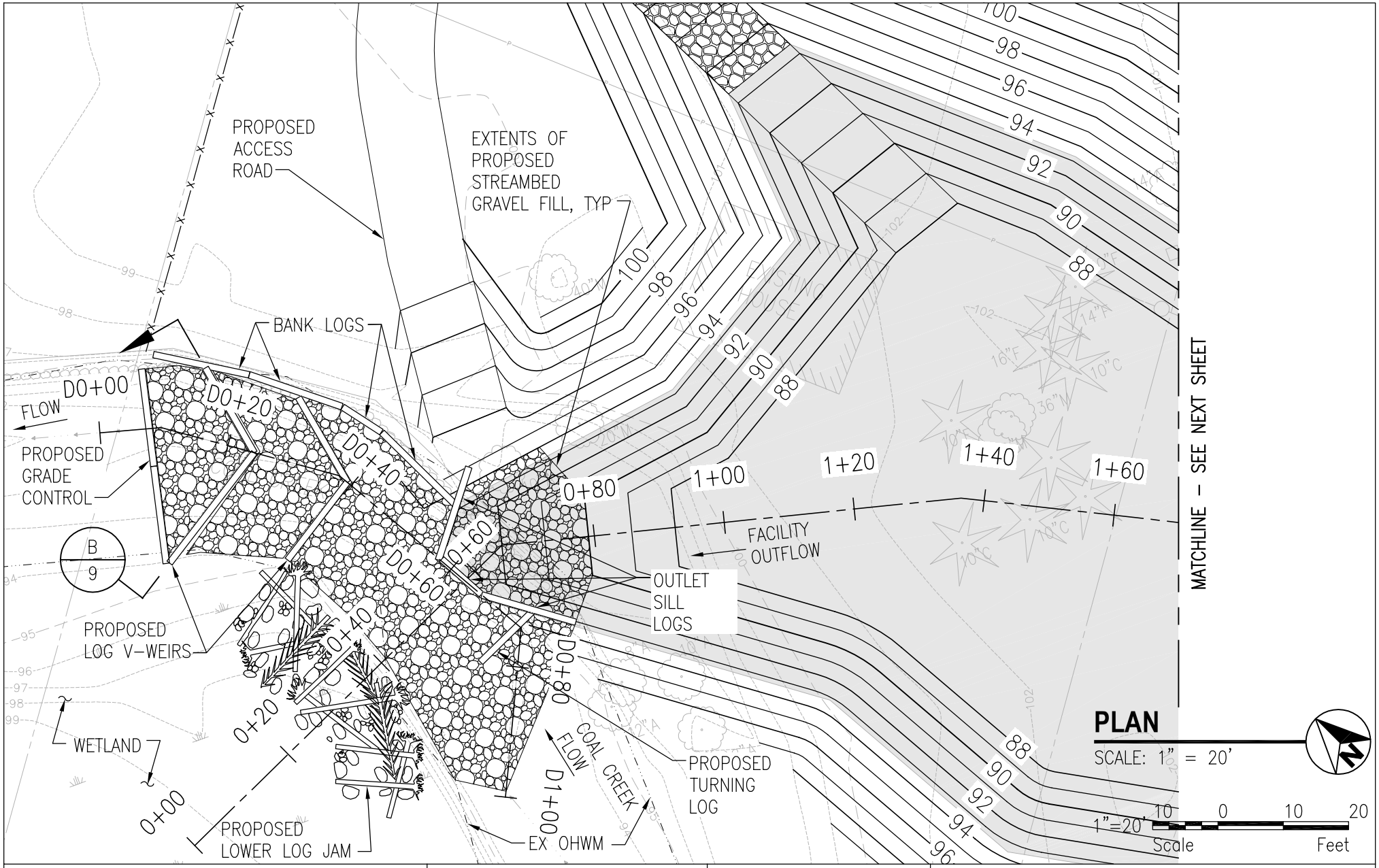

PROJECT NAME: LOWER COAL CREEK OFF-LINE SEDIMENTATION POND PURPOSE: SEDIMENT REMOVAL DATUM: NAVD 88	REFERENCE NO.: N/A COUNTY OF: KING WATER BODY: COAL CREEK	SITE LOCATION ADDRESS: 4641 125TH AVE SE BELLEVUE, WA 98006	OUTLET PLAN APPLICATION BY: CITY OF BELLEVUE DATE: SHEET 5 OF 32

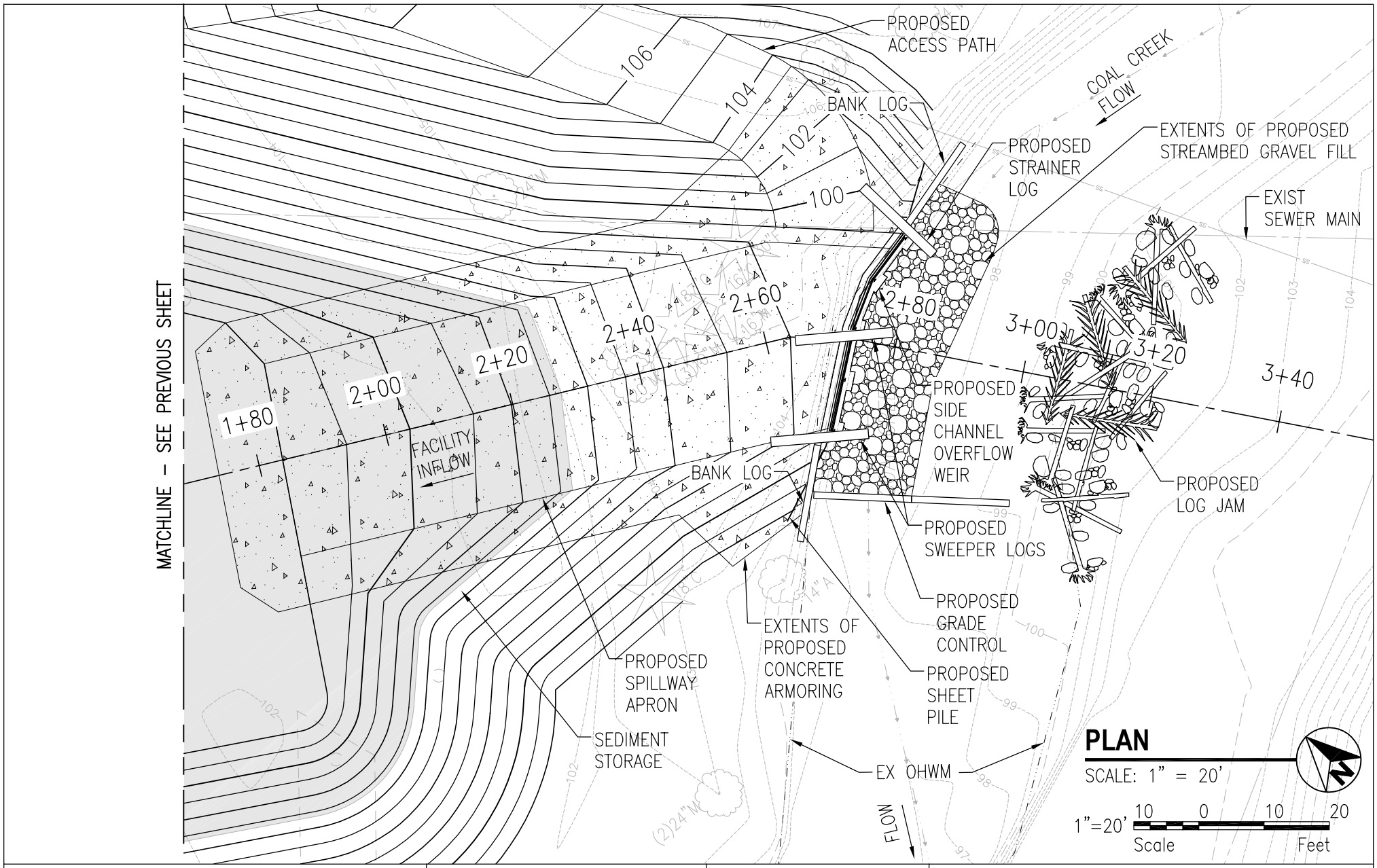

PROJECT NAME: LOWER COAL CREEK OFF-LINE SEDIMENTATION POND	REFERENCE NO.: N/A	SITE LOCATION ADDRESS:	INLET PLAN
PURPOSE: SEDIMENT REMOVAL	COUNTY OF: KING	4641 125TH AVE SE BELLEVUE, WA 98006	APPLICATION BY: CITY OF BELLEVUE
DATUM: NAVD 88	WATER BODY: COAL CREEK		DATE: SHEET 6 OF 32

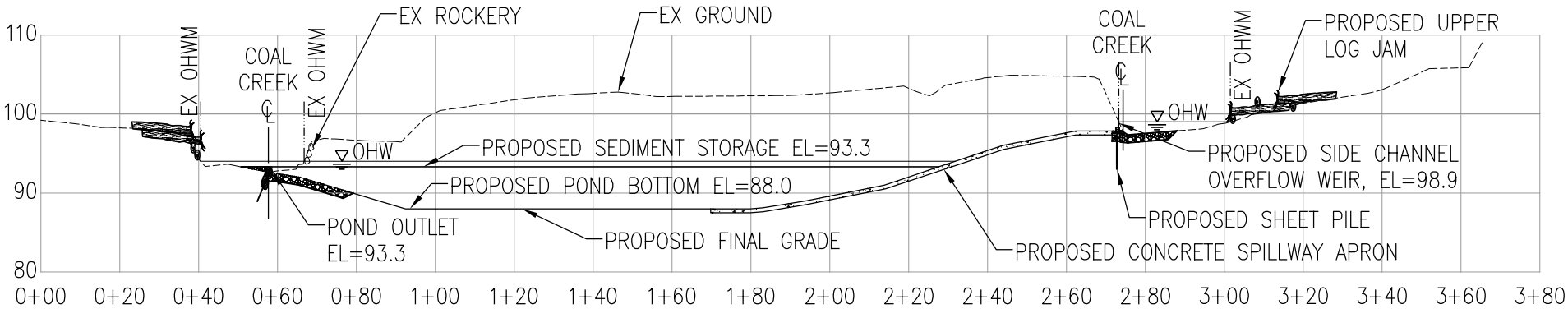

POND PROFILE

SEDIMENTATION POND
SCALE: 1"=40' HORIZ
1"=20' VERT

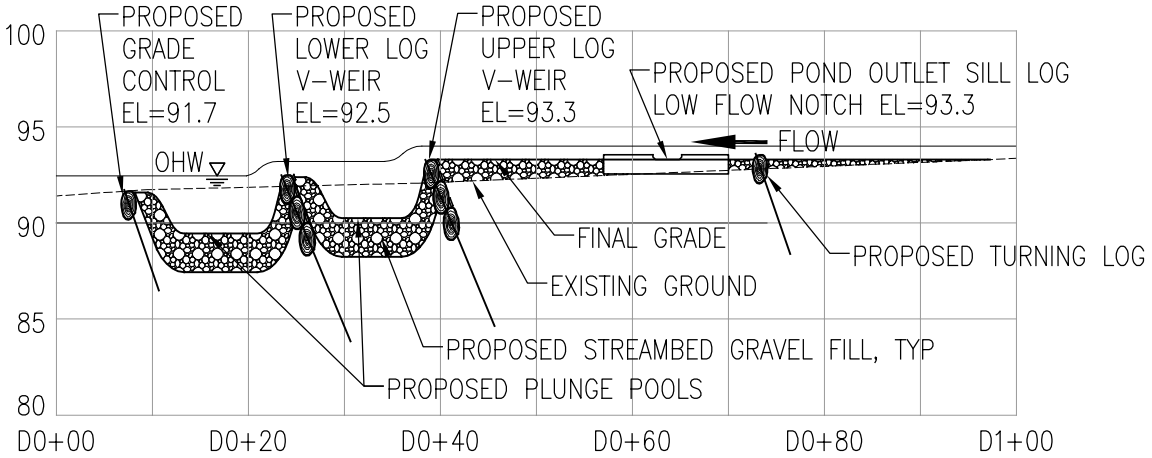

PROFILE D

DOWNSTREAM WEIRS
SCALE: 1"=20' HORIZ
1"=10' VERT

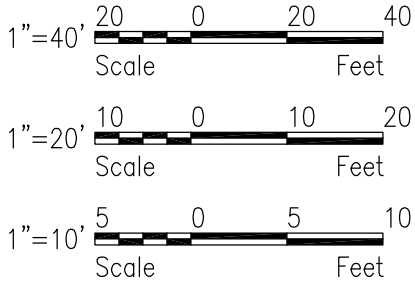

PROJECT NAME: LOWER COAL CREEK OFF-LINE SEDIMENTATION POND PURPOSE: SEDIMENT REMOVAL DATUM: NAVD 88	REFERENCE NO.: N/A COUNTY OF: KING WATER BODY: COAL CREEK	SITE LOCATION ADDRESS: 4641 125TH AVE SE BELLEVUE, WA 98006	PROFILES APPLICATION BY: CITY OF BELLEVUE DATE: SHEET 7 OF 32

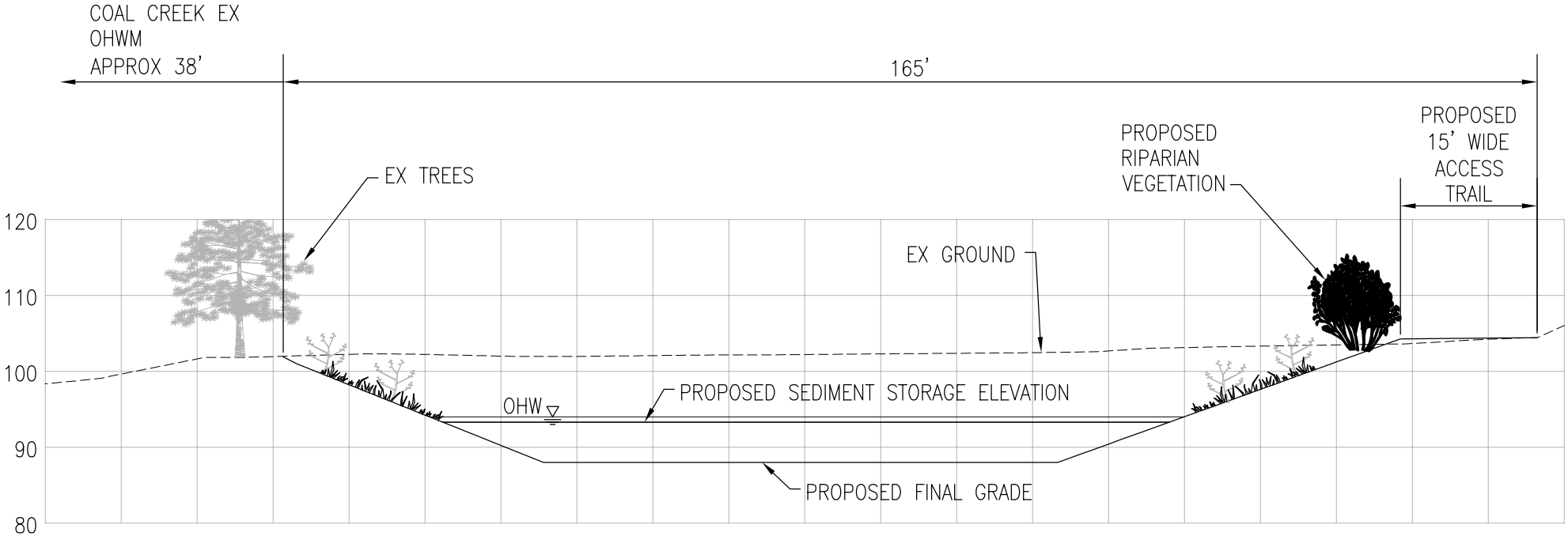

SECTION

A / 4

SEDIMENTATION POND
SCALE: 1"=20"

1"=20' 10 0 10 20
Scale Feet

PROJECT NAME: LOWER COAL CREEK OFF-LINE SEDIMENTATION POND PURPOSE: SEDIMENT REMOVAL DATUM: NAVD 88	REFERENCE NO.: N/A COUNTY OF: KING WATER BODY: COAL CREEK	SITE LOCATION ADDRESS: 4641 125TH AVE SE BELLEVUE, WA 98006	POND SECTION APPLICATION BY: CITY OF BELLEVUE DATE: SHEET 8 OF 32

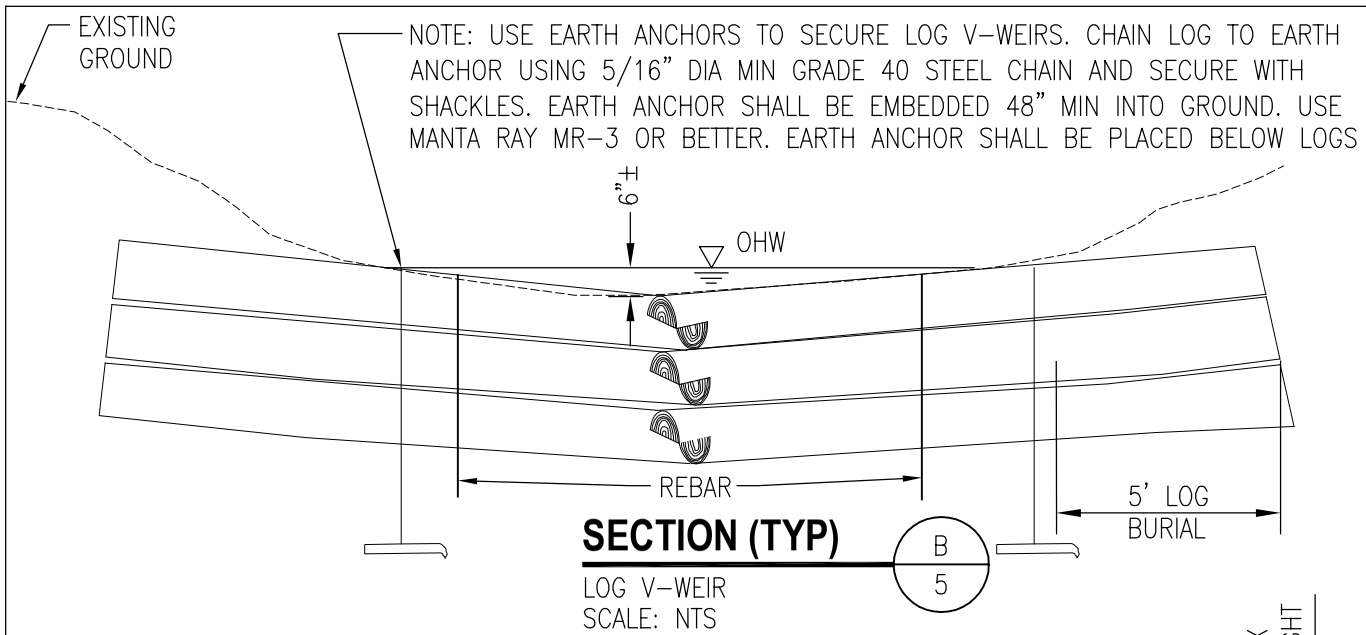

SECTION (TYP)

LOG V-WEIR
SCALE: NTS

NOTES:

1. MINIMIZE EXCAVATION AND FILL VOIDS WITH SMALLER ROCKS, GRAVELS, AND NATIVE FILL MATERIALS.
2. LOGS SHALL BE 18"-24" DIAMETER DOUGLAS FIR.
3. DRILL 1-1/8" DIA HOLE IN TOP LOG AND DRIVE 1" DIA REBAR THROUGH LOGS, 6' OC, MIN. BEND REBAR IN DIRECTION OF THE GRAIN FLUSH WITH TOP OF LOG.
4. FILL OVER GEOTEXTILE WITH MIX OF STREAMBED GRAVEL AND RIPRAP.
5. EXTEND GEOTEXTILE MINIMUM 6' UPSTREAM OF LOGS.
6. USE 2x4 WOOD CLEAT TO ATTACH GEOTEXTILE ALONG FULL LENGTH OF LOG.

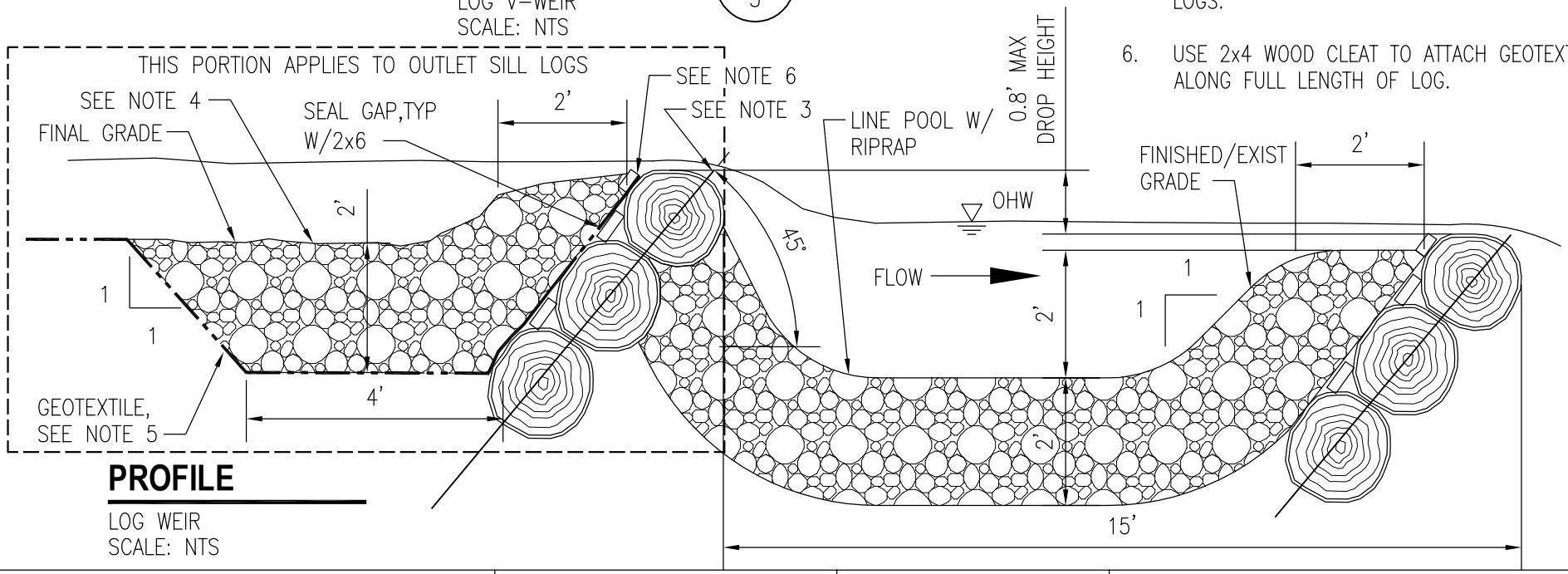

PROFILE

LOG WEIR
SCALE: NTS

PROJECT NAME: LOWER COAL CREEK OFF-LINE SEDIMENTATION POND	REFERENCE NO.: N/A	SITE LOCATION ADDRESS:	OUTLET LOG V-WEIR DETAILS
PURPOSE: SEDIMENT REMOVAL	COUNTY OF: KING	4641 125TH AVE SE BELLEVUE, WA 98006	APPLICATION BY: CITY OF BELLEVUE
DATUM: NAVD 88	WATER BODY: COAL CREEK		DATE: SHEET 9 OF 32

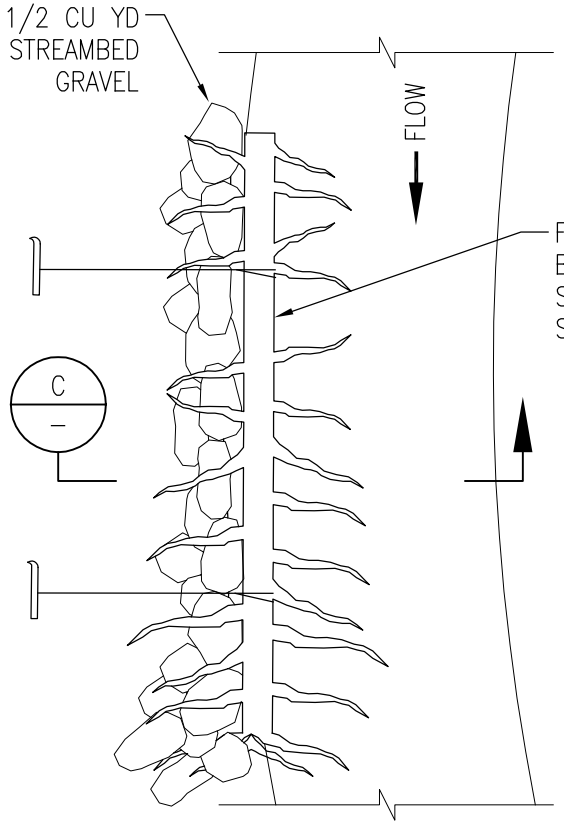

FOR BRANCHED BANK LOG, TRIM BRANCHES ON BOTTOM AND BANK SIDE AS NEEDED. TRIM CREEK SIDE AS DIRECTED BY ENGINEER

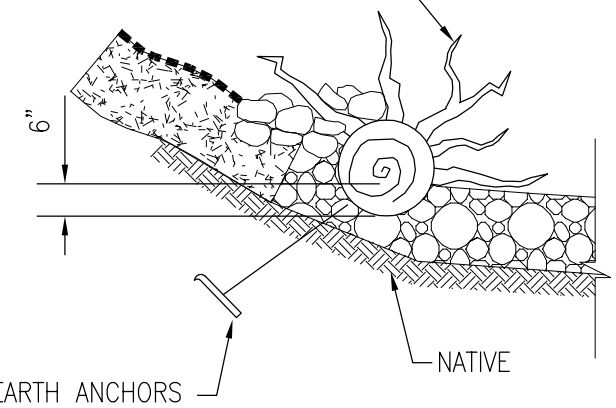

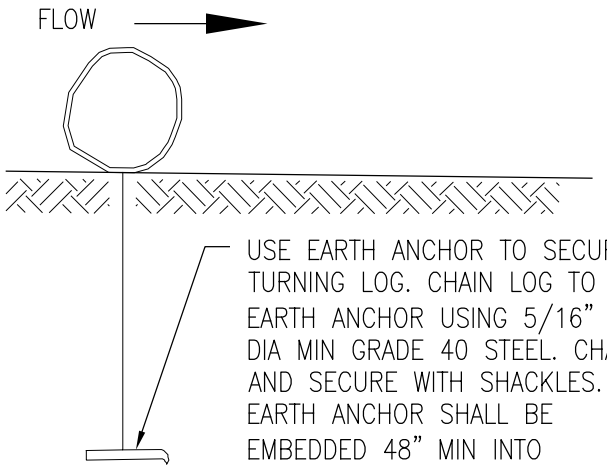

USE EARTH ANCHOR TO SECURE TURNING LOG. CHAIN LOG TO EARTH ANCHOR USING 5/16" DIA MIN GRADE 40 STEEL. CHAIN AND SECURE WITH SHACKLES. EARTH ANCHOR SHALL BE EMBEDDED 48" MIN INTO GROUND. USE MANTA RAY MR-3 OR BETTER. EARTH ANCHOR SHALL BE PLACED DIRECTLY BELOW LOG.

DETAIL

BANK LOG
SCALE: NONE

SECTION

C
–

BANK LOG
SCALE: NONE

DETAIL

GRADE CONTROL LOG/TURNING LOG
SCALE: NONE

PROJECT NAME: LOWER COAL CREEK OFF-LINE SEDIMENTATION POND	REFERENCE NO.: N/A	SITE LOCATION ADDRESS:	MISCELLANEOUS LOG DETAILS
PURPOSE: SEDIMENT REMOVAL	COUNTY OF: KING	4641 125TH AVE SE BELLEVUE, WA 98006	APPLICATION BY: CITY OF BELLEVUE
DATUM: NAVD 88	WATER BODY: COAL CREEK		DATE: SHEET 10 OF 32

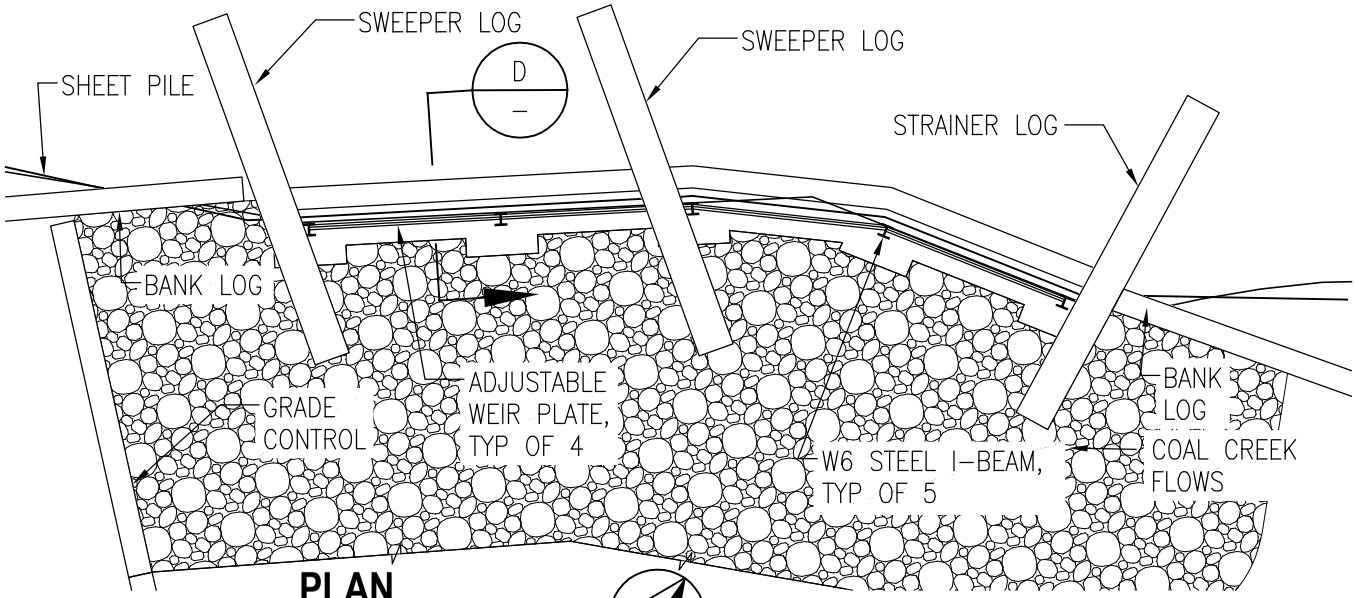

PLAN

SIDE CHANNEL OVERFLOW
SCALE: 1/8"=1'

NOTE: SWEEPER AND STRAINER LOGS SHALL BE ATTACHED TO I–BEAM. LOGS SHALL BE TIED TO THE SPILLWAY ON POND SIDE OF WEIR TO PREVENT ROTATION.

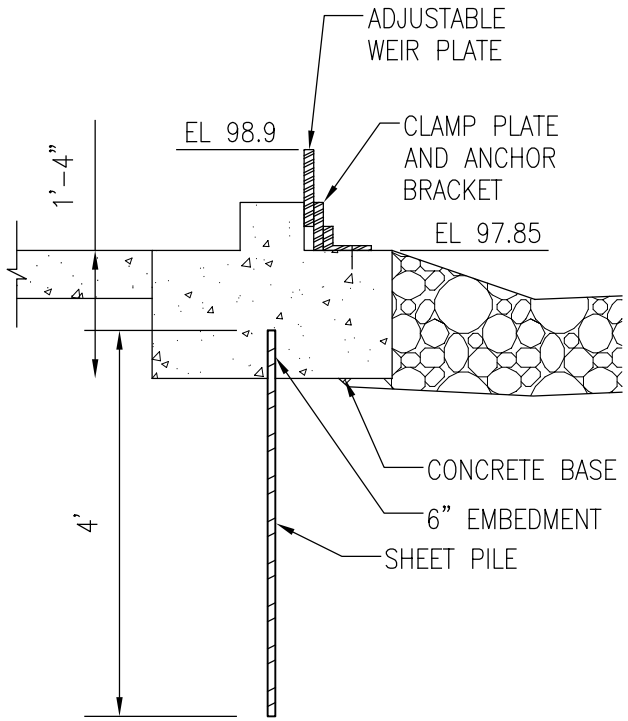

SECTION

D
–

SIDE CHANNEL OVERFLOW
SCALE: 1/2"=1'

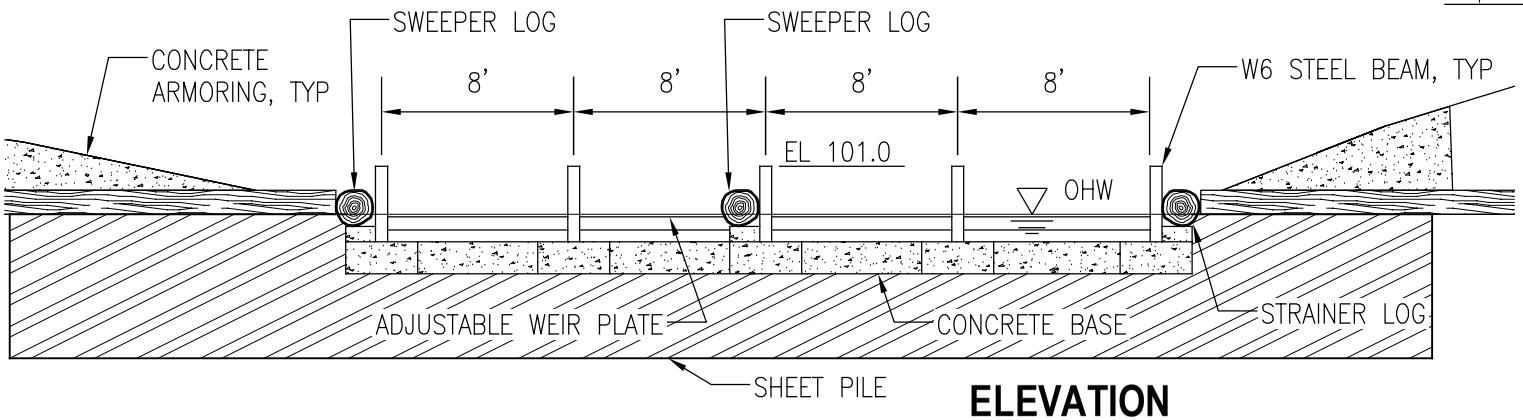

ELEVATION

SIDE CHANNEL OVERFLOW
SCALE: 1/8"=1'

PROJECT NAME: LOWER COAL CREEK OFF–LINE SEDIMENTATION POND	REFERENCE NO.: N/A	SITE LOCATION ADDRESS:	SIDE CHANNEL OVERFLOW DETAILS
PURPOSE: SEDIMENT REMOVAL	COUNTY OF: KING	4641 125TH AVE SE BELLEVUE, WA 98006	APPLICATION BY: CITY OF BELLEVUE
DATUM: NAVD 88	WATER BODY: COAL CREEK		DATE: SHEET 11 OF 32

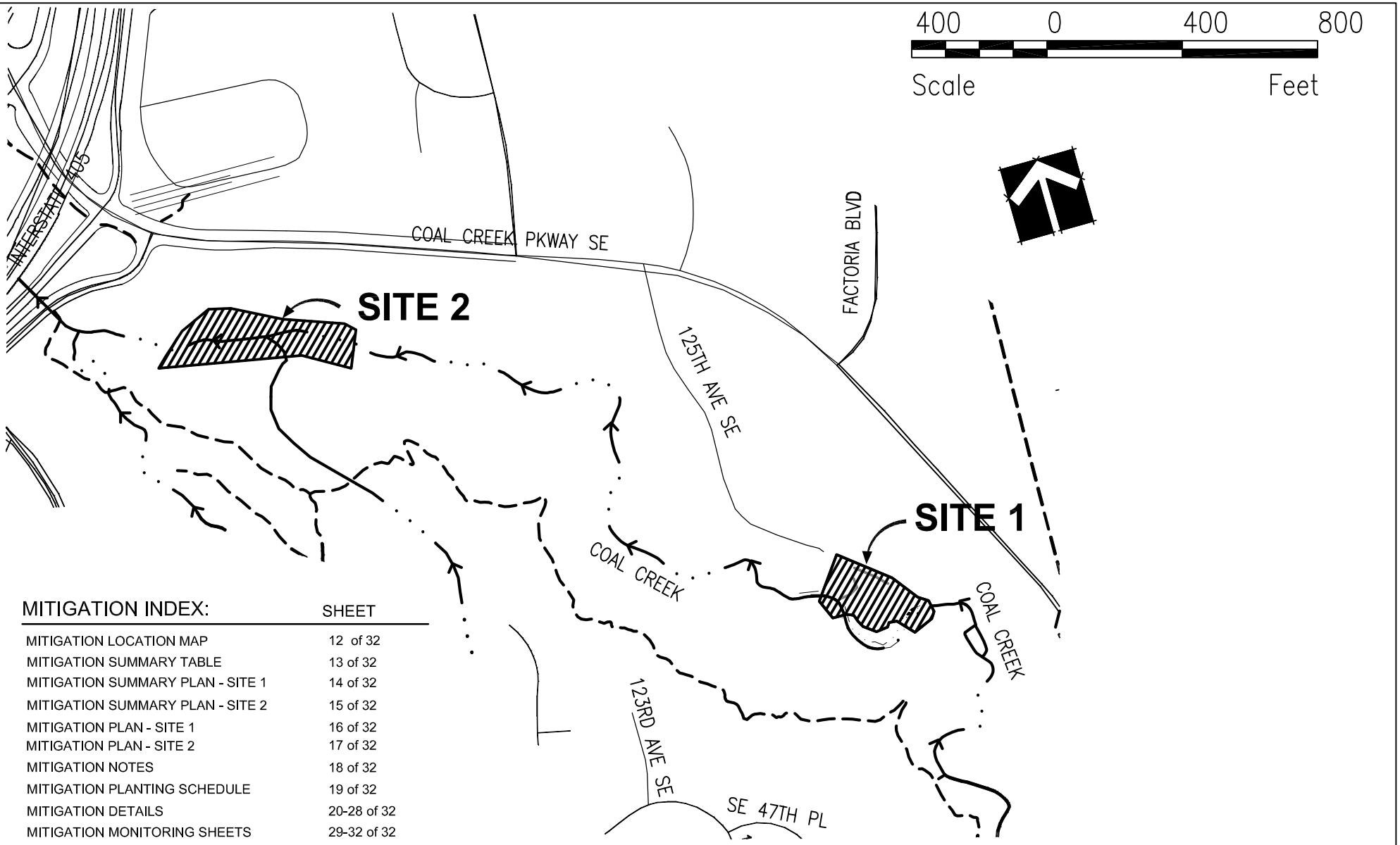

MITIGATION INDEX:

	SHEET
MITIGATION LOCATION MAP	12 of 32
MITIGATION SUMMARY TABLE	13 of 32
MITIGATION SUMMARY PLAN - SITE 1	14 of 32
MITIGATION SUMMARY PLAN - SITE 2	15 of 32
MITIGATION PLAN - SITE 1	16 of 32
MITIGATION PLAN - SITE 2	17 of 32
MITIGATION NOTES	18 of 32
MITIGATION PLANTING SCHEDULE	19 of 32
MITIGATION DETAILS	20-28 of 32
MITIGATION MONITORING SHEETS	29-32 of 32

PROJECT NAME: LOWER COAL CREEK OFF-LINE SEDIMENTATION POND	REFERENCE NO.: N/A	SITE LOCATION ADDRESS:	MITIGATION LOCATION MAP
PURPOSE: SEDIMENT REMOVAL	COUNTY OF: KING	4641 125TH AVE SE BELLEVUE, WA 98006	APPLICATION BY: CITY OF BELLEVUE
DATUM: NAVD 88	WATER BODY: COAL CREEK		DATE: SHEET 12 OF 32

CITY OF BELLEVUE
MITIGATION SUMMARY (SITES 1 AND 2 COMBINED)

WETLAND IMPACT (FROM POND)		PROPOSED MITIGATION	
PERMANENT IMPACT :	987 S.F. (0.02 AC)	@ 5.2:1 ENHANCEMENT	5,148 S.F. (0.12 AC)
TEMPORARY IMPACT :	146 S.F. (0.01 AC)	@ 1:1 RESTORATION	146 S.F. (0.00 AC)
TOTAL =	1,133 S.F. (0.03 AC)	TOTAL =	5,294 S.F. (0.12 AC)
STREAM BUFFER IMPACT (FROM POND)		PROPOSED MITIGATION	
PERMANENT IMPACT :	17,914 S.F. (0.41 AC)	@ 2.3:1 ENHANCEMENT*	41,155 S.F. (0.95 AC)
TEMPORARY IMPACT :	16,170 S.F. (0.37 AC)	@ 1:1 RESTORATION	16,170 S.F. (0.37 AC)
TOTAL =	34,084 S.F. (0.78 AC)	TOTAL =	57,325 S.F. (1.32 AC)
STREAM IMPACT (FROM POND)		PROPOSED MITIGATION	
PERMANENT IMPACT :	0 S.F.		
TEMPORARY IMPACT :	7,603 S.F. (0.17 AC)	@ 1:1 RESTORATION	7,603 S.F. (0.17 AC)
TOTAL =	7,603 S.F. (0.17 AC)	TOTAL =	7,603 S.F. (0.17 AC)

*INCLUDES 1,688 S.F. RIPARIAN ENHANCEMENT OF BELLEVUE NON-REGULATED STREAM BUFFER.

PROJECT NAME: LOWER COAL CREEK OFF-LINE SEDIMENTATION POND	REFERENCE NO.: N/A	SITE LOCATION ADDRESS:	MITIGATION SUMMARY TABLE
PURPOSE: SEDIMENT REMOVAL	COUNTY OF: KING	4641 125TH AVE SE BELLEVUE, WA 98006	APPLICATION BY: CITY OF BELLEVUE
DATUM: NAVD 88	WATER BODY: COAL CREEK		DATE: SHEET 13 OF 32

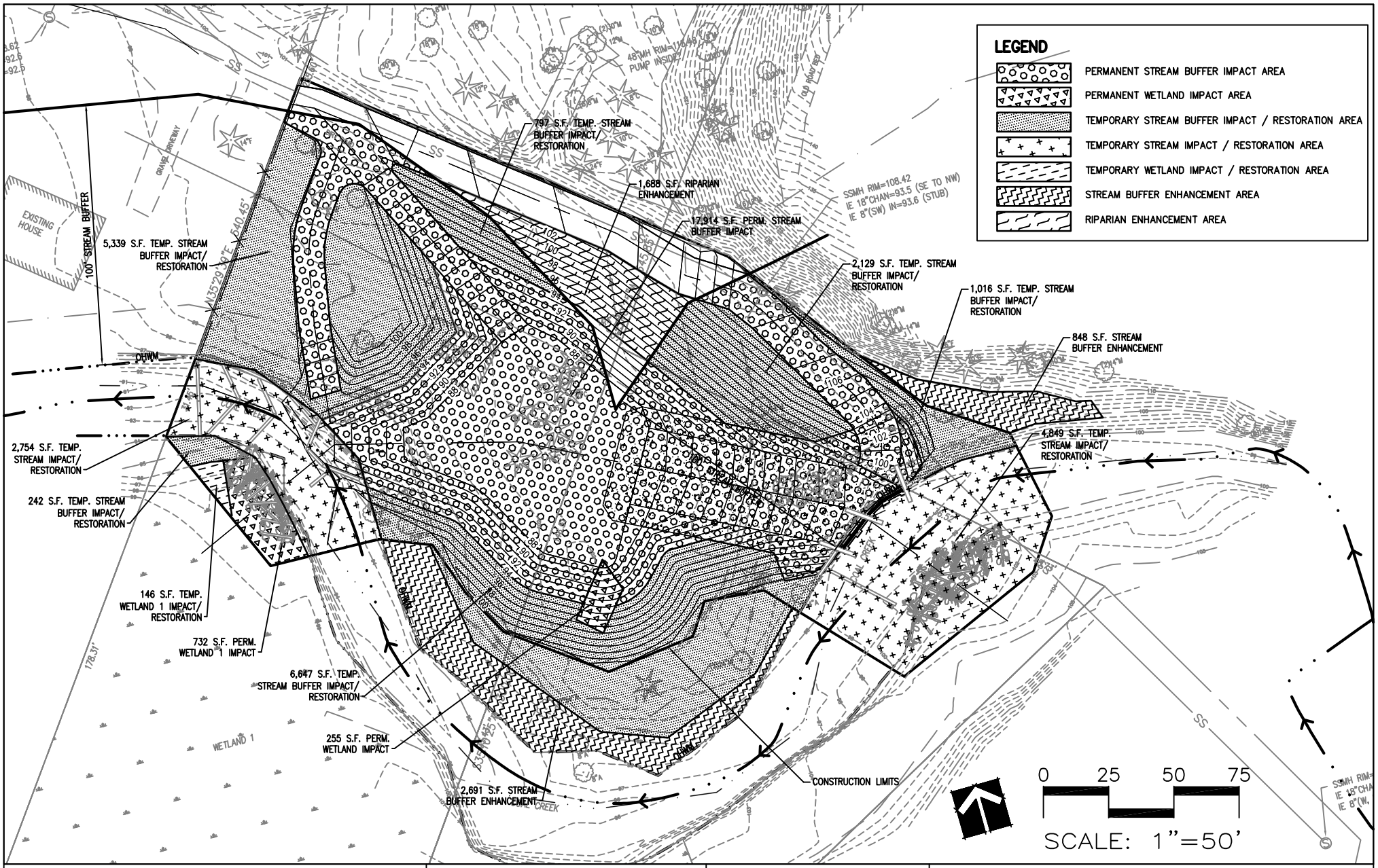

PROJECT NAME: LOWER COAL CREEK OFF-LINE SEDIMENTATION POND	REFERENCE NO.: N/A	SITE LOCATION ADDRESS:	MITIGATION SUMMARY PLAN - SITE 1
PURPOSE: SEDIMENT REMOVAL	COUNTY OF: KING	4641 125TH AVE SE BELLEVUE, WA 98006	APPLICATION BY: CITY OF BELLEVUE
DATUM: NAVD 88	WATER BODY: COAL CREEK		DATE: SHEET 14 OF 32

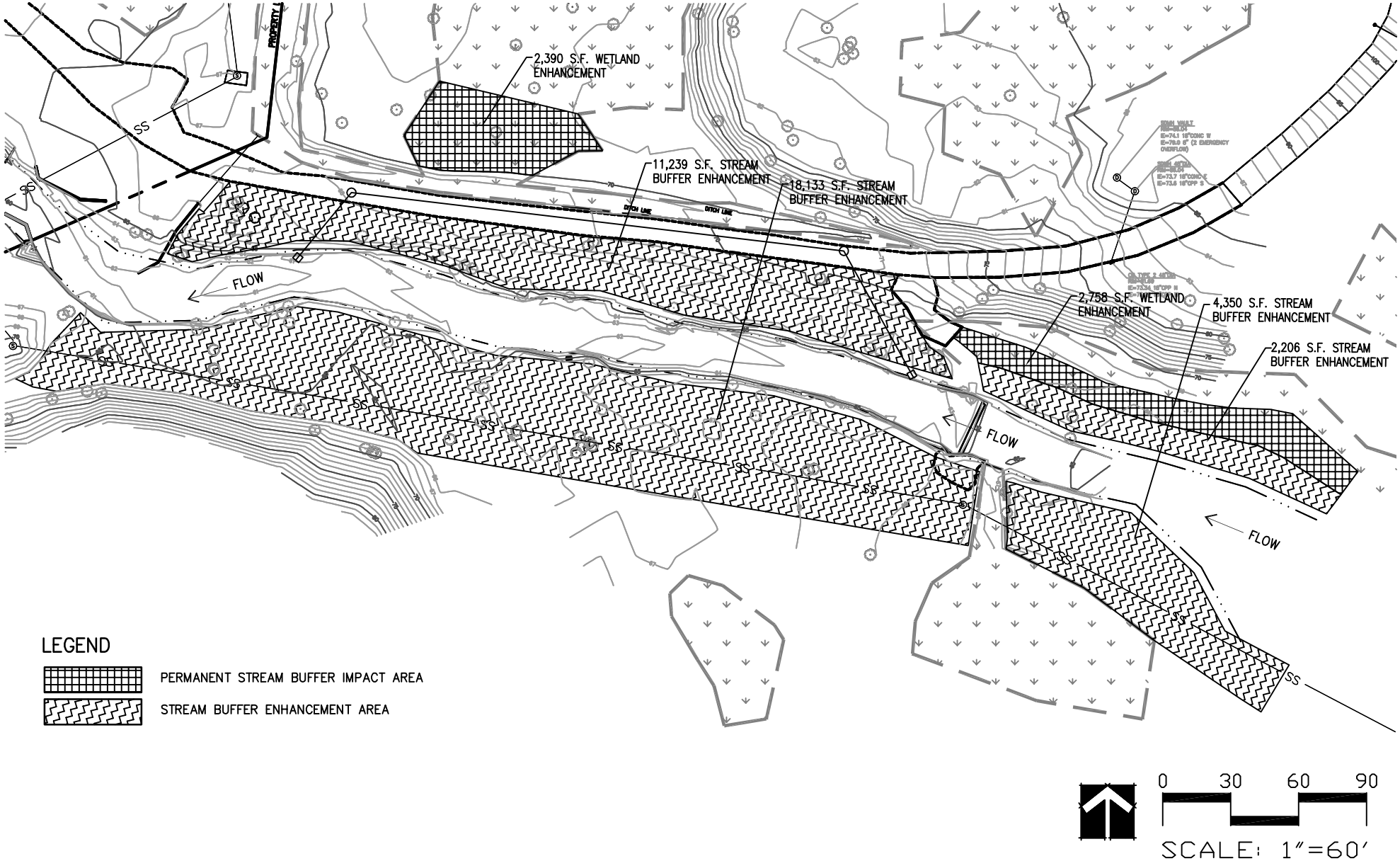

PROJECT NAME: LOWER COAL CREEK OFF-LINE SEDIMENTATION POND PURPOSE: SEDIMENT REMOVAL DATUM: NAVD 88	REFERENCE NO.: N/A COUNTY OF: KING WATER BODY: COAL CREEK	SITE LOCATION ADDRESS: 4641 125TH AVE SE BELLEVUE, WA 98006	MITIGATION SUMMARY - SITE 2 APPLICATION BY: CITY OF BELLEVUE DATE: SHEET 15 OF 32

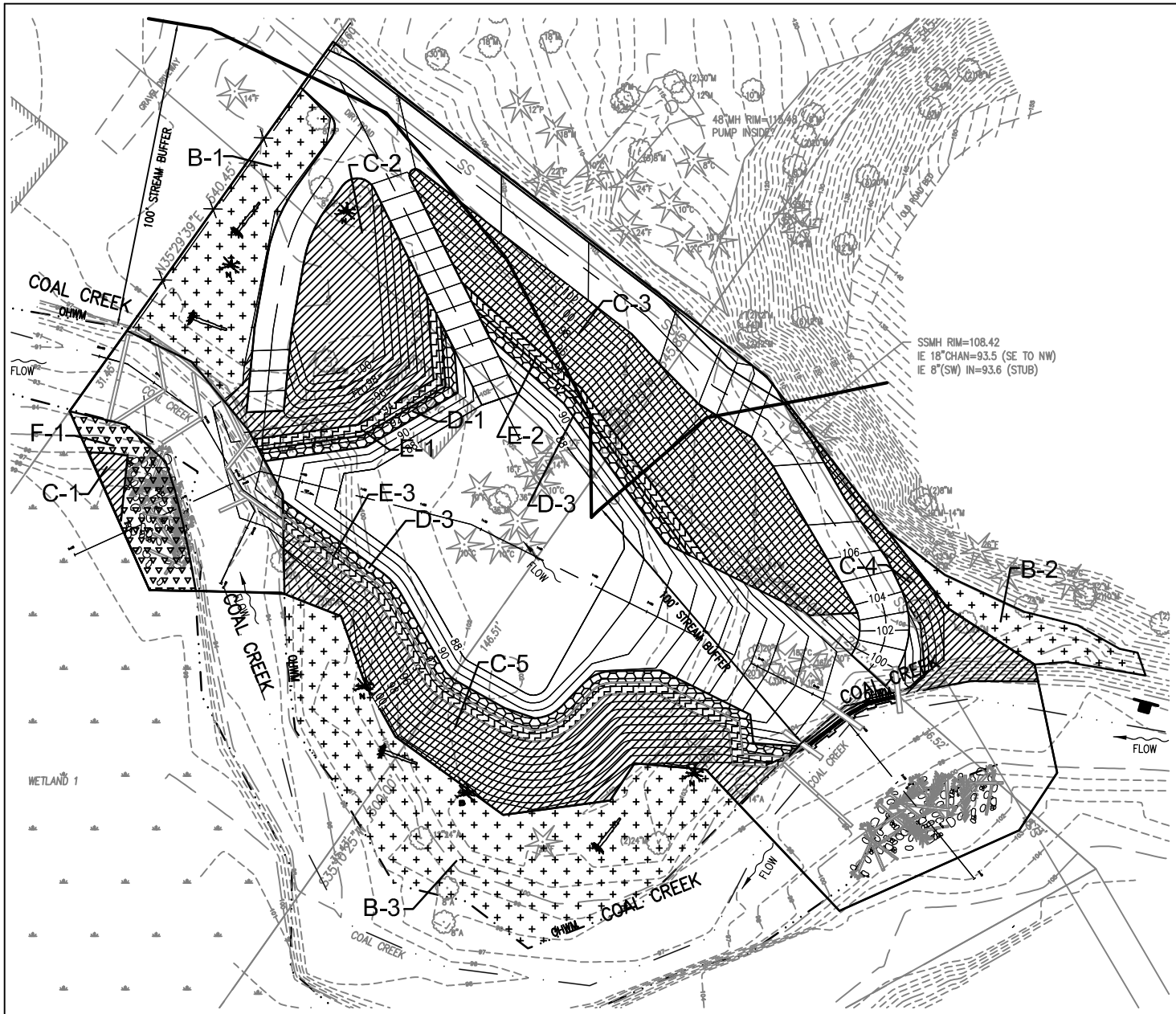

NOTES:

1. SEE SHEET 18 FOR MITIGATION NOTES AND SHEET 19 FOR MITIGATION PLANT SCHEDULE.

2. SEE SHEET 20–29 FOR MITIGATION DETAILS.

LEGEND:

- B — BUFFER INFILL PLANTING: TREES ONLY @ 8'O.C.
- C — POND PLANTING: TREES @ 8' O.C., SHRUBS @ 4' O.C.
- D — POND PLANTING: DEEP EMERGENTS @ 1' O.C.
- E — POND PLANTING: SHALLOW EMERGENTS @ 1' O.C.
- F — STREAMBANK RESTORATION: LIVE STAKES @ 3' O.C.
- HYDROSEED AREA
- STANDING SNAG (N=NESTING BOX, B=BAT BOX)
- DOWNED LOG

0 25 50 75

SCALE: 1"=50'

PROJECT NAME: LOWER COAL CREEK OFF-LINE SEDIMENTATION POND	REFERENCE NO.: N/A	SITE LOCATION ADDRESS:	MITIGATION PLAN - SITE 1
PURPOSE: SEDIMENT REMOVAL	COUNTY OF: KING	4641 125TH AVE SE BELLEVUE, WA 98006	APPLICATION BY: CITY OF BELLEVUE
DATUM: NAVD 88	WATER BODY: COAL CREEK		DATE: SHEET 16 OF 32

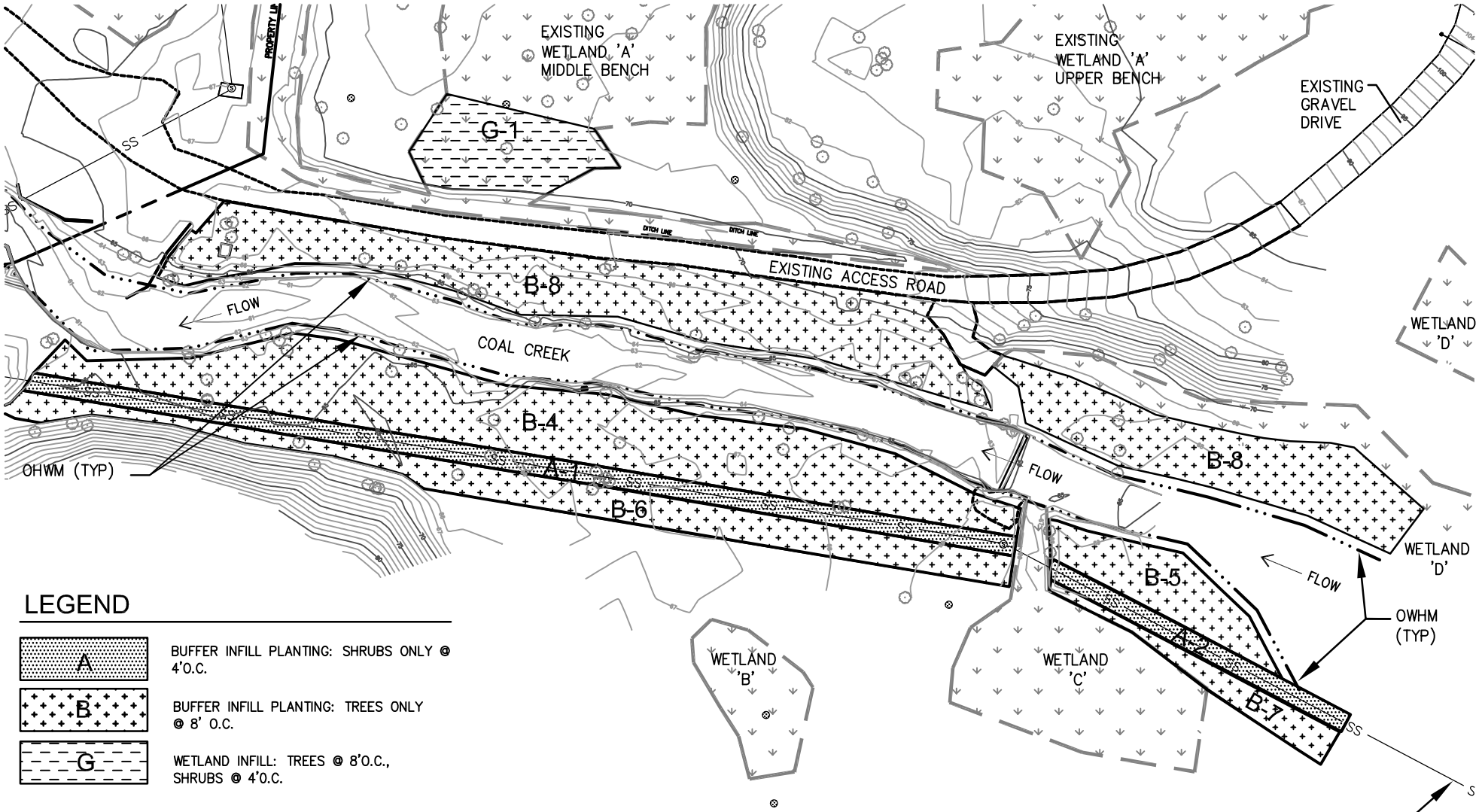

LEGEND

A	BUFFER INFILL PLANTING: SHRUBS ONLY @ 4'O.C.
B	BUFFER INFILL PLANTING: TREES ONLY @ 8' O.C.
G	WETLAND INFILL: TREES @ 8'O.C., SHRUBS @ 4'O.C.

0 60 120 180

SCALE: 1"=60'

GENERAL NOTES:

1. SEE SHEET 18 FOR MITIGATION NOTES AND SHEET 19 FOR MITIGATION PLANT SCHEDULE.
2. SEE SHEET 20–29 FOR MITIGATION DETAILS.

PROJECT NAME: LOWER COAL CREEK OFF-LINE SEDIMENTATION POND	REFERENCE NO.: N/A	SITE LOCATION ADDRESS:	MITIGATION PLAN - SITE 2
PURPOSE: SEDIMENT REMOVAL	COUNTY OF: KING	4641 125TH AVE SE BELLEVUE, WA 98006	APPLICATION BY: CITY OF BELLEVUE
DATUM: NAVD 88	WATER BODY: COAL CREEK		DATE: SHEET 17 OF 32

GENERAL NOTES:

1.) PRIOR TO CONSTRUCTION A LICENSED SURVEYOR SHALL SURVEY, STAKE AND FLAG LIMITS OF WORK AND WETLAND BOUNDARIES AS SHOWN ON THE PLANS.

2.) SELECTIVELY CLEAR AND GRUB BUFFER AND WETLAND INFILL PLANTING AREAS. FIELD ADJUST PLANTING AROUND EXISTING VEGETATION AS NECESSARY WETLAND BIOLOGIST / LANDSCAPE ARCHITECT SHALL APPROVE FINAL LAYOUT IN FIELD.

3.) POND PLANTING AREAS SHALL BE SCARIFIED TO A 6" DEPTH BELOW SUBGRADE. UNIFORMLY PLACE 6" OF TOPSOIL TYPE A AND TILL INTO TOP 12" BELOW FINISH GRADE.

4.) BUFFER AND WETLAND INFILL PLANTING AREAS SHALL BE PIT AMENDED WITH TOPSOIL TYPE A AS SPECIFIED.

5.) PLACE 18" DIA. X 3" DEEP BARK MULCH RINGS AROUND TREES AND SHRUBS IN BUFFER INFILL AREAS. WETLAND INFILL AND POND PLANTING AREAS SHALL RECEIVE COMPOST MULCH RINGS.

6.) ALL POND PLANTING AREAS SHALL RECEIVE BUFFER HYDROSEED MIX AS SPECIFIED.

7.) ALL PLANTINGS SHALL RECEIVE DRIWATER GEL (OR APPROVED EQUAL). PLANTS SHALL BE MANUALLY WATERED (E.G., WATERING TRUCK, OR IRRIGATION BAGS) BY THE CONTRACTOR DURING THE PLANT ESTABLISHMENT PERIOD. CONTRACTOR SHALL SUBMIT IRRIGATION METHOD FOR APPROVAL BY OWNER'S REPRESENTATIVE. ALL PLANTS SHALL RECEIVE AT LEAST ONE INCH OF WATER PER WEEK DURING INSTALLATION AND THROUGHOUT THE GROWING SEASON PERIOD (MARCH 15 TO OCTOBER 31).

PLANT SCHEDULE

(FOR MITIGATION PLAN SHEETS 16 and 17)

BOTANICAL NAME	COMMON NAME	SIZE	SPACING	QUANTITY A-1	A-2	B-1	B-2	B-3	B-4	B-5	B-6	B-7	C-1	C-2	C-3	C-4	C-5	D-1	D-2	D-3	E-1	E-2	E-3	F-1	G-1
TREES																									
Thuja plicata	Western Red Cedar	2 GAL.	8' O.C.			32	5	35	36	6	16	4	1	20	33	6	34								9
Picea sitchensis	Sitka Spruce	2 GAL.	8' O.C.										1	20	33	6	26								6
Pseudotsuga menziesii	Douglas Fir	2 GAL.	8' O.C.			32	5	35	83	17	36	10													11
Tsuga heterophylla	Western Hemlock	2 GAL.	8' O.C.			32	5	35	19	5	8	2													4
Populus balsimifera	Black Cottonwood	2 GAL.	8' O.C.						28	4	12	3													9
Fraxinus latifolia	Oregon Ash	2 GAL.	8' O.C.						19	5	8	2	1	14	17	6	14								4
SHRUBS *																									
Acer circinatum	Vine Maple	2 GAL.	4' O.C.																						12
Corylus cornuta	Western Hazelnut	2 GAL.	4' O.C.																						10
Cornus sericea	Red Osier Dogwood	2 GAL.	4' O.C.										2	41	50	14	50								10
Lonicera involucrata	Black Twinberry	2 GAL.	4' O.C.	60	20								2	49	63	22	50								23
Physocarpus capitatus	Pacific Ninebark	2 GAL.	4' O.C.										2	24	38		25								7
Rubus spectabilis	Salmonberry	2 GAL.	4' O.C.												13		25								13
Symphoricarpos albus	Snowberry	2 GAL.	4' O.C.	48	16								2	16	12	8	25								8
Holodiscus discolor	Ocean Spray	2 GAL.	4' O.C.																						17
Oemleria cerasiformis	Indian Plum	2 GAL.	4' O.C.	36	12																				10
Rosa nutkana	Nootka Rose	2 GAL.	4' O.C.	60	20									32	50	12	25								
Mahonia aquifolium	Tall Oregon Grape	2 GAL.	4' O.C.	36	12																				20
Salix lucida	Pacific Willow	LIVE STAKES	2.5 O.C.												25		23							50	
Salix scouleriana	Scouler Willow	LIVE STAKES	2.5 O.C.																						
Salix sitchensis	Sitka Willow	LIVE STAKES	2.5 O.C.																					44	
Cornus sericea	Red Osier Dogwood	LIVE STAKES	2.5 O.C.																					31	
EMERGENTS **																									
Carex stipata	Sawbreak Sedge	root stock	12" O.C.																		152	165	366		
Eleocharis palustris	Spike Rush	root stock	12" O.C.																		133	166	320		
Scirpus microcarpus	Small-fruited Bulrush	root stock	12" O.C.																		96	164	229		
Carex obnupta	Slough Sedge	root stock	12" O.C.															119	148	360					
Scirpus acutus	Hardstem Bulrush	root stock	12" O.C.															119	144	315					
Scirpus validus	Softstem Bulrush	root stock	12" O.C.															123	143	225					
			AREA TOTALS	240	80	96	15	105	185	37	80	21	11	216	334	74	297	361	435	900	381	495	915	125	173

* 1. SHRUBS SHALL BE PLANTED IN CLUSTERS OF 3-5 OF SAME SPECIES.

** 2. EMERGENTS SHALL BE PLANTED IN CLUSTERS OF 24-30 OF SAME SPECIES.

KIND/VARIETY	% BY WEIGHT	MIN. % GERM
COLONIAL BENTGRASS	10%	85%
RED CREEPING FESCUE	45%	80%
PERENNIAL RYEGRASS	45%	90%

APPLICATION RATE:	90 LBS/ACRE
CANFOR WOOD CELLULOSE ECO-FIBER MULCH:	2,000 LBS/ACRE
NUTRICULTURE SEED STARTER FERTILIZER (16-45-7):	200 LBS/ACRE
CANFOR ECO-TAC GUAR TACKIFIER:	60 LBS/ACRE
STAY MOIST MOISTURE RETENTION AGENT	60 LBS/ACRE

HYDROSEED MIX

PROJECT NAME: LOWER COAL CREEK OFF-LINE SEDIMENTATION POND

PURPOSE: SEDIMENT REMOVAL

DATUM: NAVD 88

REFERENCE NO.: N/A

COUNTY OF: KING

WATER BODY: COAL CREEK

SITE LOCATION ADDRESS:

4641 125TH AVE SE
BELLEVUE, WA 98006

MITIGATION PLANTING SCHEDULE

APPLICATION BY: CITY OF BELLEVUE

DATE:

PLANT MATERIAL SETBACK CHART

THIS CHART SUPPLEMENTS SECTION 8.02.3(7) OF THE STANDARD SPECIFICATIONS

	GUARDRAIL BARRIER	EDGE OF ROADWAY	WALL	FENCE	SIGNS	EXISTING TREE, TRUNK	EXISTING VEGETATION MASS
EVERGREEN TREE	10'	10'	10'	10'	15'	15'	10'
DECIDUOUS TREE	10'	10'	10'	10'	15'	15'	10'
SHRUB	5'	10'	5'	6'	6'	10'	10'

TYPICAL SETBACKS FOR PLANT MATERIAL UNLESS OTHERWISE DIRECTED BY THE ENGINEER DURING LAYOUT AND STAKING OF PLANT LOCATIONS. DISTANCE NOTED IS TO STEM OR TRUNK OF PLANT.

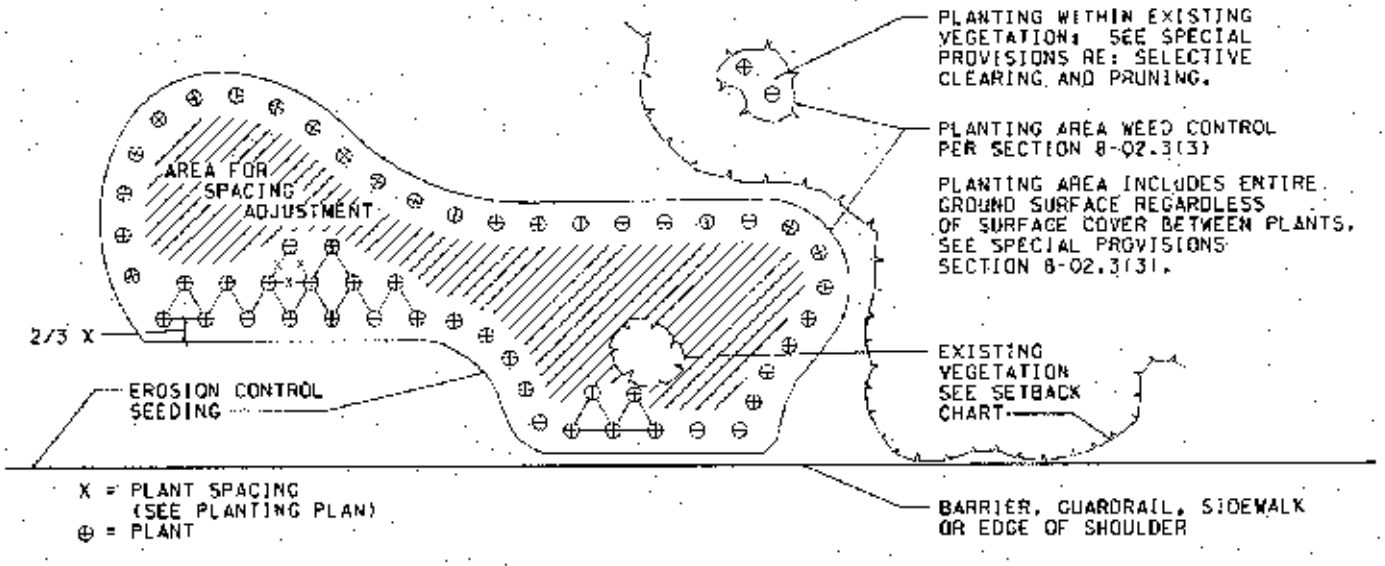

PLANTING AREA LAYOUT, SETBACK, AND WEED CONTROL

NOT TO SCALE

PLANTING AREA LAYOUT

NOT TO SCALE

PROJECT NAME: LOWER COAL CREEK OFF-LINE SEDIMENTATION POND	MITIGATION DETAILS
PURPOSE: SEDIMENT REMOVAL	SITE LOCATION ADDRESS: 4641 125TH AVE SE BELLEVUE, WA 98006
DATUM: NAVD 88	
REFERENCE NO.: N/A	APPLICATION BY: CITY OF BELLEVUE
COUNTY OF: KING	DATE:
WATER BODY: COAL CREEK	SHEET 20 OF 32

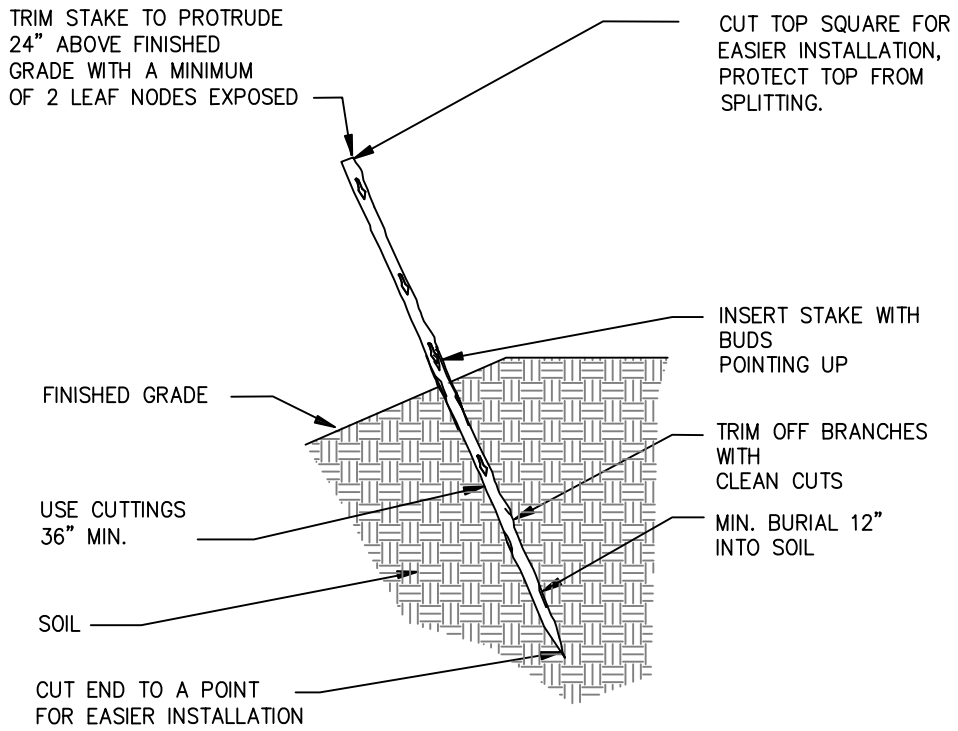

LIVE STAKE PLANTING

NOT TO SCALE

PROJECT NAME: LOWER COAL CREEK OFF-LINE SEDIMENTATION POND	MITIGATION DETAILS
PURPOSE: SEDIMENT REMOVAL	SITE LOCATION ADDRESS: 4641 125TH AVE SE BELLEVUE, WA 98006
DATUM: NAVD 88	
REFERENCE NO.: N/A	APPLICATION BY: CITY OF BELLEVUE
COUNTY OF: KING	DATE:
WATER BODY: COAL CREEK	SHEET 21 OF 32

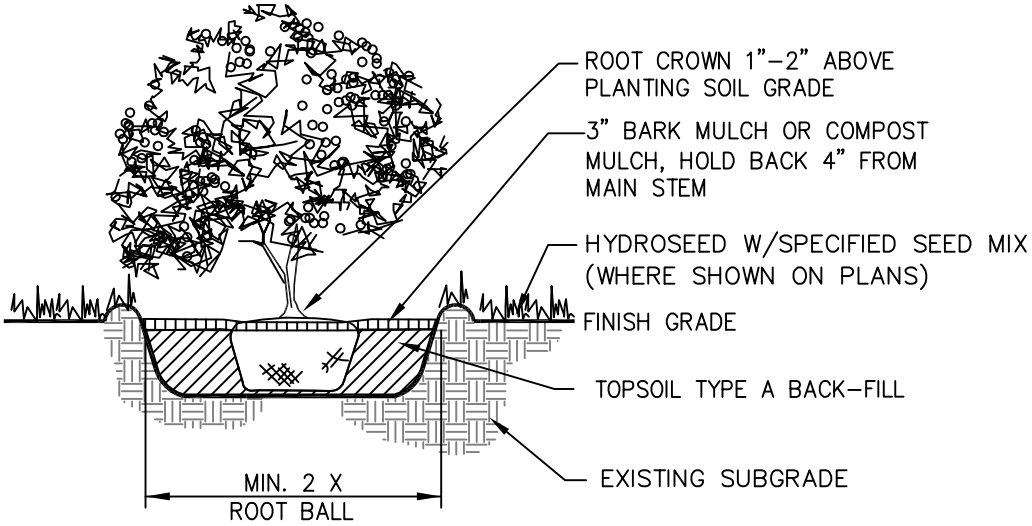

SHRUB PLANTING

NOT TO SCALE

PROJECT NAME: LOWER COAL CREEK OFF–LINE SEDIMENTATION POND	MITIGATION DETAILS
PURPOSE: SEDIMENT REMOVAL	SITE LOCATION ADDRESS: 4641 125TH AVE SE BELLEVUE, WA 98006
DATUM: NAVD 88	
REFERENCE NO.: N/A	APPLICATION BY: CITY OF BELLEVUE
COUNTY OF: KING	DATE:
WATER BODY: COAL CREEK	SHEET 22 OF 32

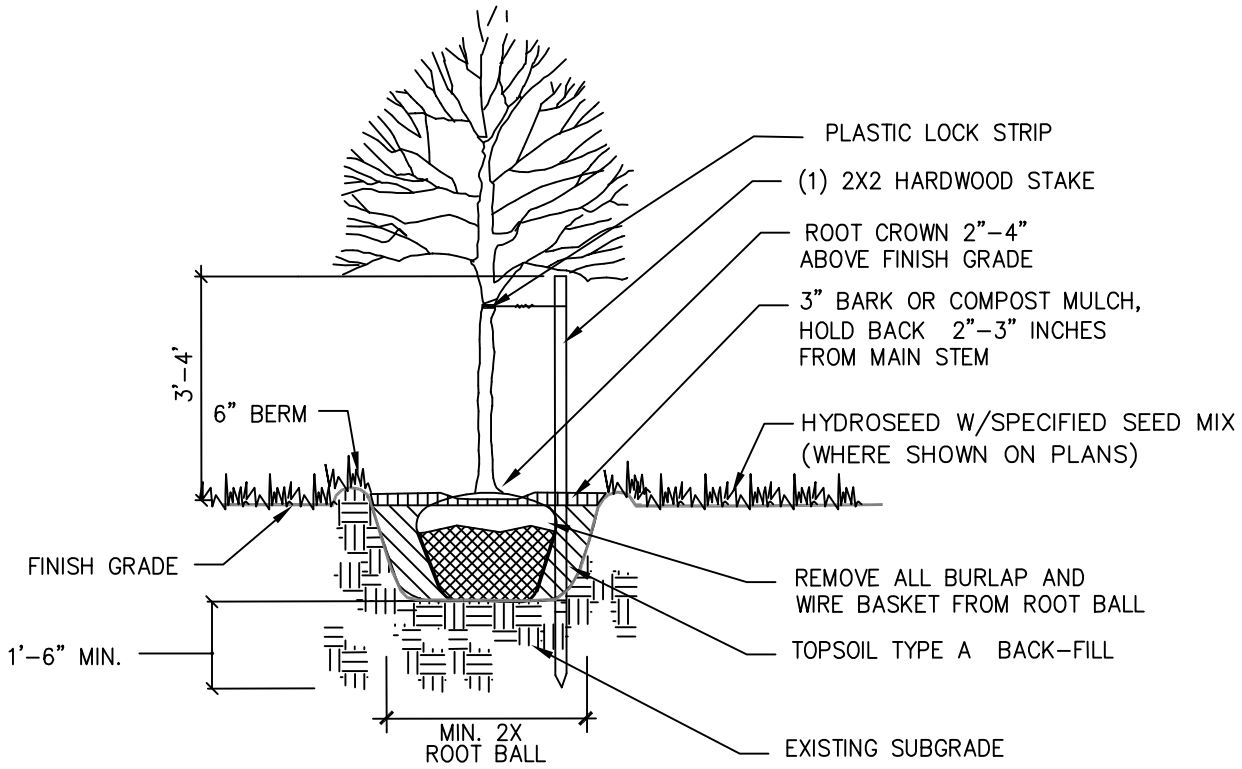

DECIDUOUS TREE PLANTING

NOT TO SCALE

PROJECT NAME: LOWER COAL CREEK OFF–LINE SEDIMENTATION POND	MITIGATION DETAILS
PURPOSE: SEDIMENT REMOVAL	SITE LOCATION ADDRESS: 4641 125TH AVE SE BELLEVUE, WA 98006
DATUM: NAVD 88	
REFERENCE NO.: N/A	
COUNTY OF: KING	APPLICATION BY: CITY OF BELLEVUE
WATER BODY: COAL CREEK	DATE: SHEET 23 OF 32

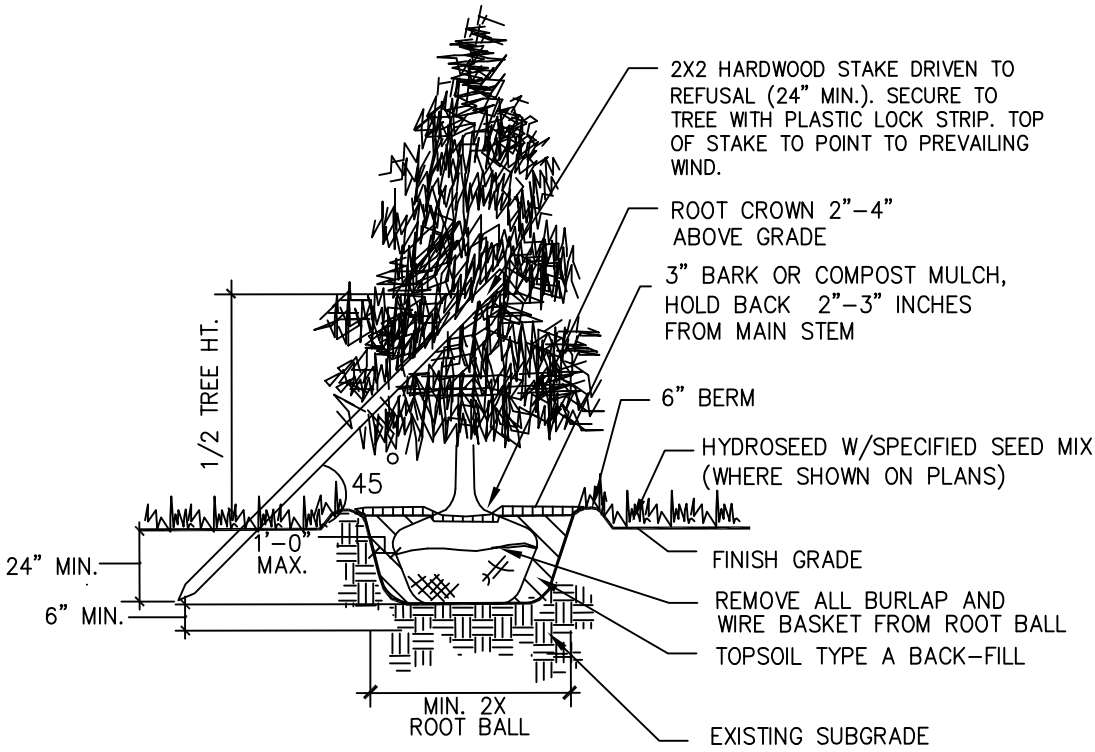

EVERGREEN TREE PLANTING

NOT TO SCALE

PROJECT NAME: LOWER COAL CREEK OFF–LINE SEDIMENTATION POND	MITIGATION DETAILS
PURPOSE: SEDIMENT REMOVAL	SITE LOCATION ADDRESS: 4641 125TH AVE SE BELLEVUE, WA 98006
DATUM: NAVD 88	
REFERENCE NO.: N/A	APPLICATION BY: CITY OF BELLEVUE
COUNTY OF: KING	DATE:
WATER BODY: COAL CREEK	SHEET 24 OF 32

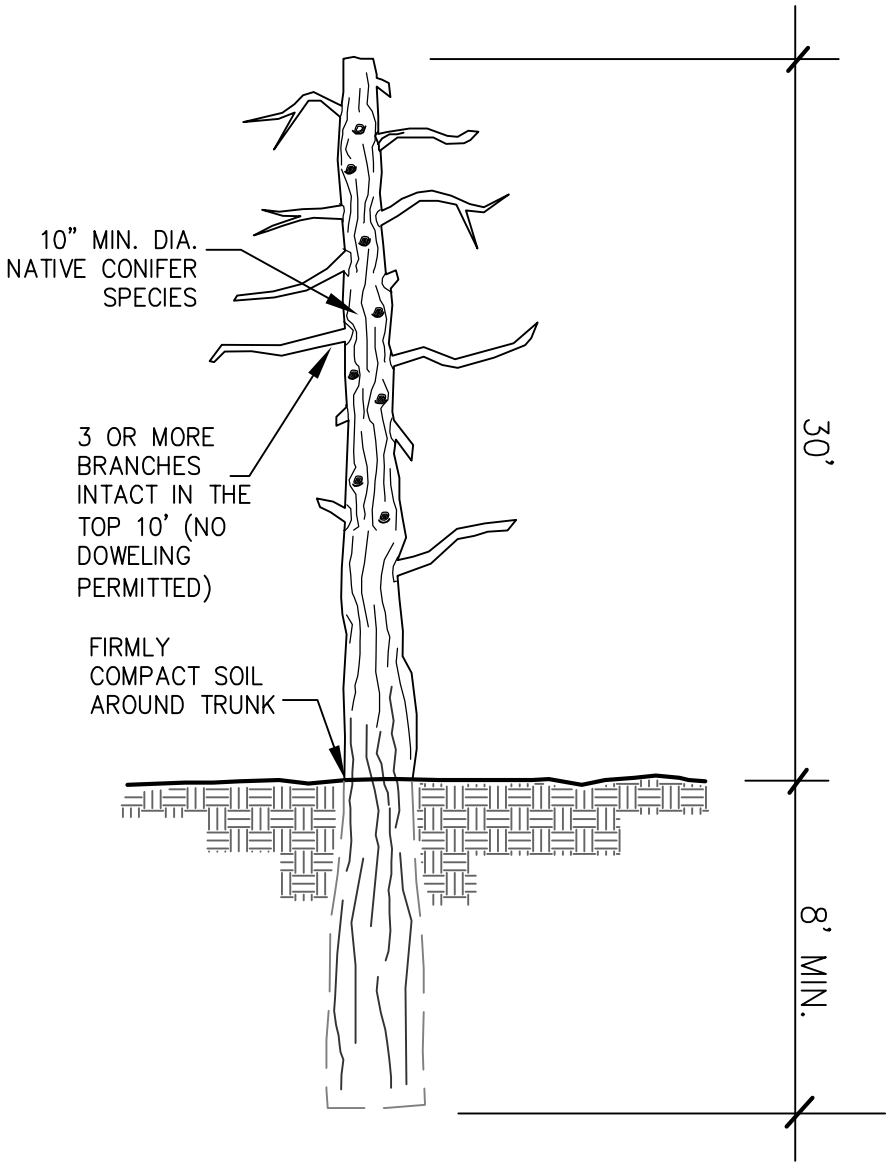

STANDING SNAG DETAIL

NOT TO SCALE

PROJECT NAME: LOWER COAL CREEK OFF-LINE SEDIMENTATION POND	MITIGATION DETAILS
PURPOSE: SEDIMENT REMOVAL	SITE LOCATION ADDRESS: 4641 125TH AVE SE BELLEVUE, WA 98006
DATUM: NAVD 88	
REFERENCE NO.: N/A	
COUNTY OF: KING	APPLICATION BY: CITY OF BELLEVUE
WATER BODY: COAL CREEK	DATE: SHEET 25 OF 32

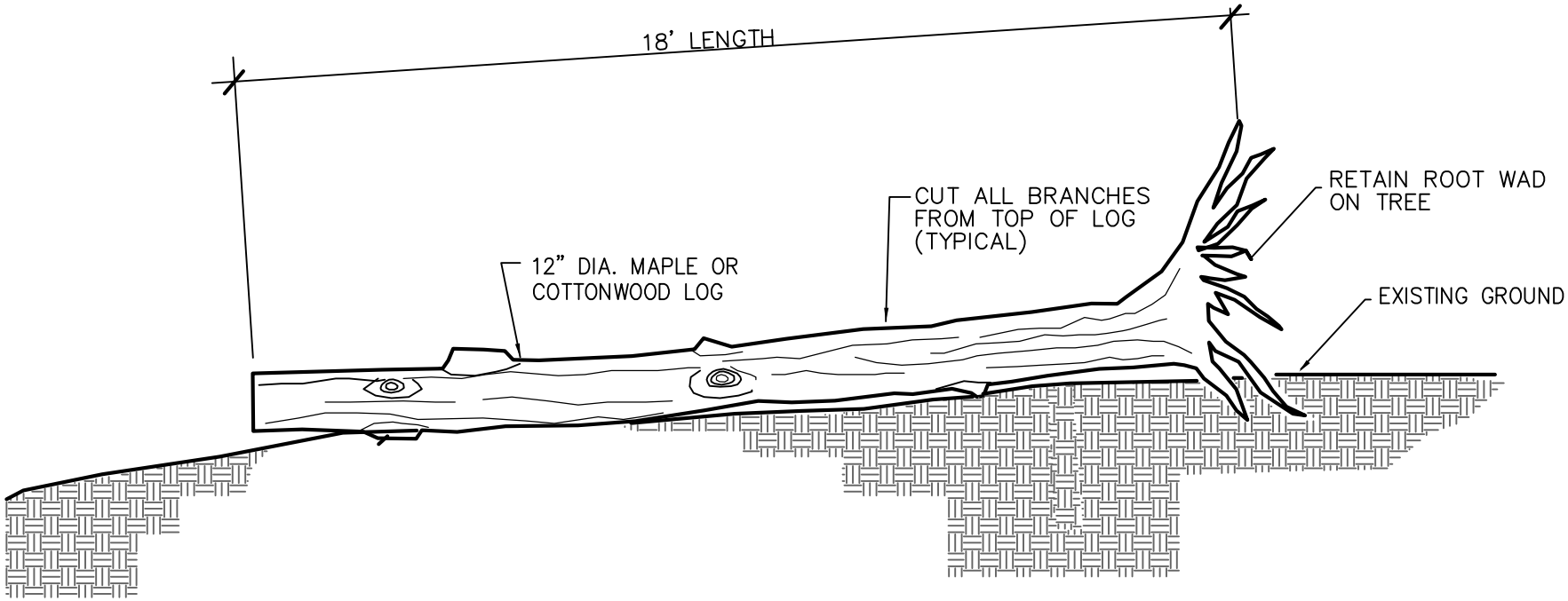

NOTE:
PLACE LOG ON FINISHED GRADE OR EXISTING GROUND.

DOWNED LOG

NOT TO SCALE

PROJECT NAME: LOWER COAL CREEK OFF-LINE SEDIMENTATION POND	REFERENCE NO.: N/A	SITE LOCATION ADDRESS:	MITIGATION DETAILS
PURPOSE: SEDIMENT REMOVAL	COUNTY OF: KING	4641 125TH AVE SE BELLEVUE, WA 98006	APPLICATION BY: CITY OF BELLEVUE
DATUM: NAVD 88	WATER BODY: COAL CREEK		DATE: SHEET 26 OF 32

NEST BOX SPECIFICATIONS

TARGET SPECIES	Floor of Cavity	Depth of Cavity (inches)	Entrance Above Floor (inches)	Size of Entrance (inches)	Height Above Ground (feet)	Quantity
	AxB	C	D	E		
CHICKADEE NUTHATCH, DOWNEY WOODPECKER 1	4 x 4	8–10	6–8	1.25	8–18	4

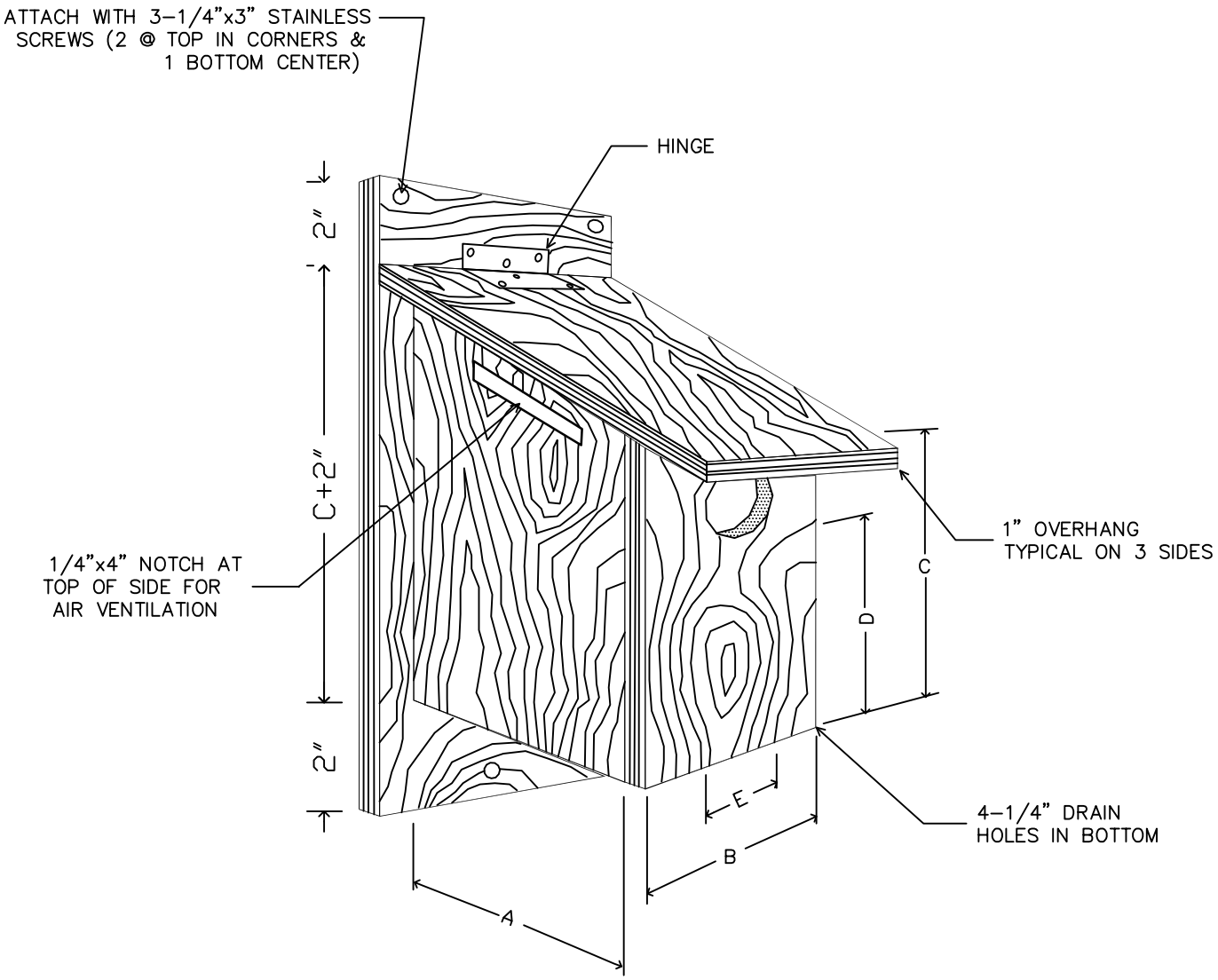

NEST BOX

NOT TO SCALE

PROJECT NAME: LOWER COAL CREEK OFF–LINE SEDIMENTATION POND

PURPOSE: SEDIMENT REMOVAL

DATUM: NAVD 88

REFERENCE NO.: N/A

COUNTY OF: KING

WATER BODY: COAL CREEK

MITIGATION DETAILS

SITE LOCATION ADDRESS: 4641 125TH AVE SE BELLEVUE, WA 98006

APPLICATION BY: CITY OF BELLEVUE

DATE:

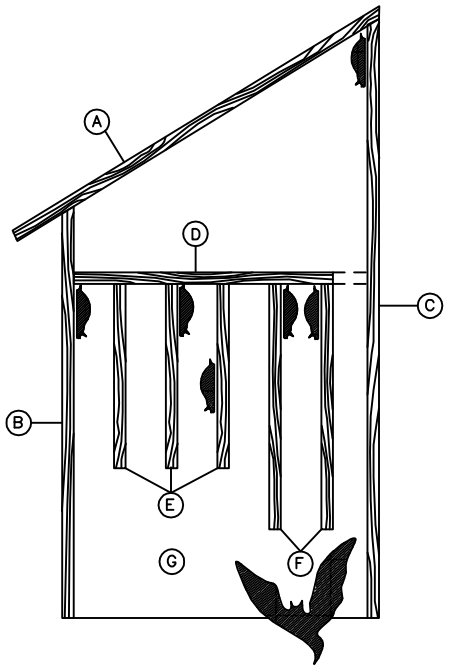

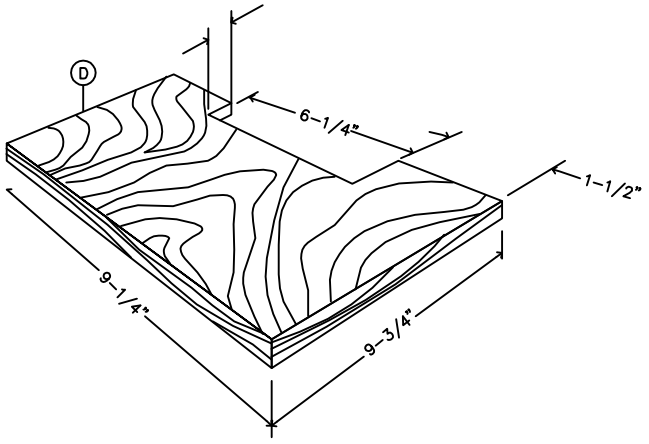

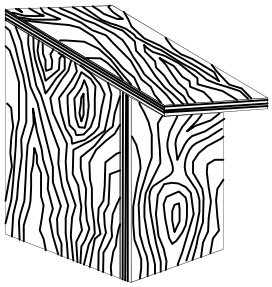

DIMENSIONS

- (A) — ROOF 16-1/2"x11-1/4"
- (B) — FRONT 18-1/4"x9-1/2"
- (C) — BACK 27"x9-1/4"
- (D) — CEILING 93/4"x9-1/4"
- (E) — PARTITIONS 9-1/4" WIDE x 8" HIGH
- (F) — PARTISIONS 9-1/4" WIDE x 14" HIGH
- (G) — SIDES 11-1/4" WIDE x 27" AT BACK, 18-3/4" FRONT

SPACING BETWEEN PARTITIONS

FRONT TO BACK 3/4", 3/4", 3/4", 1", 1-1/2", 1-1/4"

BAT BOX

NOT TO SCALE

PROJECT NAME: LOWER COAL CREEK OFF-LINE SEDIMENTATION POND	MITIGATION DETAILS
PURPOSE: SEDIMENT REMOVAL	SITE LOCATION ADDRESS: 4641 125TH AVE SE BELLEVUE, WA 98006
DATUM: NAVD 88	
REFERENCE NO.: N/A	
COUNTY OF: KING	APPLICATION BY: CITY OF BELLEVUE
WATER BODY: COAL CREEK	DATE: SHEET 28 OF 32

1.0 MITIGATION PLAN OVERVIEW

1.1 UNAVOIDABLE IMPACTS TO STREAM

AN OFF-LINE SEDIMENT CONTROL POND HAS BEEN DESIGNED FOR COAL CREEK, LOCATED WITHIN THE CITY LIMITS OF BELLEVUE, WASHINGTON. THE PURPOSE OF THE POND IS TO REDUCE SEDIMENTATION FROM REACHING LOWER COAL CREEK AND LAKE WASHINGTON. CONSTRUCTION OF THE POND WILL RESULT IN 0.43 AC OF PERMANENT UNAVOIDABLE STREAM BUFFER IMPACTS AND 0.25 AC OF TEMPORARY STREAM BUFFER IMPACTS FROM EXCAVATION OF THE POND. THE CONSTRUCTION OF IN-CHANNEL STRUCTURES (E.G., STRAINER LOGS, TURNING LOGS, WEIRS, GRADE CONTROL LOGS, AND LOG JAMS) LOCATED AT THE INLET AND OUTLET OF THE SEDIMENT POND WILL RESULT IN 0.14 AC OF TEMPORARY STREAM IMPACTS.

1.2 UNAVOIDABLE IMPACTS TO WETLANDS

CONSTRUCTION OF THE PROJECT (SEDIMENT CONTROL POND), WILL RESULT IN 0.02 AC (1,012 S.F.) OF UNAVOIDABLE PERMANENT WETLAND IMPACT AND 0.01 AC (314 S.F.) TEMPORARY IMPACT TO WETLAND.

1.3 MITIGATION APPROACH

STREAM IMPACTS

MITIGATION FOR 0.14 AC TEMPORARY IMPACTS TO COAL CREEK WILL BE ACCOMPLISHED BY PROVIDING 0.14 AC OF IN-PLACE RESTORATION INCLUDING LARGE WOODY DEBRIS INSTALLATION TO IMPROVE IN-STREAM FUNCTION FOR FISH AND WILDLIFE HABITAT. MITIGATION FOR 0.43 AC OF PERMANENT STREAM BUFFER IMPACTS WILL BE PROVIDED WITH 0.91 AC OF STREAM BUFFER ENHANCEMENT AT A 2.1:1 RATIO. THIS WILL BE ACCOMPLISHED BY ENHANCEMENT OF EXISTING STREAM BUFFER AT THE SEDIMENT POND (SITE 1) AND AN OFF-SITE MITIGATION AREA (SITE 2) LOCATED APPROXIMATELY 0.3 MILES DOWNSTREAM. MITIGATION FOR 0.25 AC OF TEMPORARY STREAM BUFFER IMPACTS WILL BE ACCOMPLISHED BY PROVIDING IN-PLACE BUFFER RESTORATION. BUFFER ENHANCEMENT AND RESTORATION WILL INCLUDE PLANTING NATIVE TREES AND SHRUBS TO IMPROVE FUNCTIONS (PRIMARILY STREAM COVER), PLANT DIVERSITY AND SUCCESSION (953 CONIFEROUS TREE SAPLINGS WILL BE INSTALLED AT SITES 1 AND 2). ALSO, HABITAT STRUCTURES (STANDING SNAGS, DOWNED LOGS, NEST BOXES AND BAT BOXES WILL BE INSTALLED TO IMPROVE WILDLIFE HABITAT FUNCTION.

WETLAND IMPACTS

MITIGATION FOR 0.02 AC (1,012 S.F.) OF PERMANENT WETLAND IMPACTS TO WETLANDS WILL BE ACCOMPLISHED BY WETLAND ENHANCEMENT TO 0.12 AC (5,148 S.F.) WITH NATIVE TREES AND SHRUBS TO IMPROVE FUNCTIONS (PRIMARILY STREAM COVER), PLANT DIVERSITY, AND SUCCESSION.

2.0 MITIGATION GOALS AND OBJECTIVES

MITIGATION GOALS:

1. REPLACE LOST FUNCTIONS FROM IMPACTS TO 0.68 AC OF STREAM BUFFER WITH 1.16 AC OF STREAM BUFFER ENHANCEMENT. ENHANCEMENT WILL OCCUR BY REMOVING INVASIVE WEEDS AND INSTALLING NATIVE TREES AND SHRUBS AND HABIAT FEATURES.

2. REPLACE LOST FUNCTIONS FROM IMPACTS TO 0.03 AC OF WETLAND WITH 0.13 AC OF WETLAND ENHANCEMENT. ENHANCEMENT WILL OCCUR BY REMOVING INVASIVE WEEDS AND INSTALLING NATIVE TREES AND SHRUBS.

3.0 PERFORMANCE STANDARDS

PERFORMANCE STANDARDS HAVE BEEN ESTABLISHED THAT CORRESPOND TO THE STATED MITIGATION GOALS AND OBJECTIVES. THESE STANDARDS ARE THE PRIMARY FACTORS THAT SHALL BE USED TO JUDGE THE SUCCESS OF THE MITIGATION PROJECT. IT SHALL BE EXCEEDINGLY IMPORTANT TO EVALUATE THE DEVELOPMENT OF THE MITIGATION PLAN OVER THE ENTIRE MONITORING PERIOD WHEN DETERMINING WHETHER EACH INDIVIDUAL STANDARD HAS BEEN MET OR NOT. WHILE SPECIFIC PERFORMANCE CRITERIA PROVIDE IMPORTANT BENCHMARKS AND SHALL HELP TO DIRECT MAINTENANCE AND CONTINGENCY EFFORTS, THE SUCCESS OF MITIGATION MUST BE MEASURED AGAINST THE GOALS AND OBJECTIVES OF THE OVERALL MITIGATION PLAN. BY MONITORING THE PROJECT AND COMPARING MONITORING RESULTS TO PERFORMANCE STANDARDS, A DETERMINATION CAN BE MADE FOR THE NEED TO IMPLEMENT MAINTENANCE EFFORTS OR THE CONTINGENCY PLAN. PERFORMANCE STANDARDS ARE IDENTIFIED IN THE TABLE BELOW.

PERFORMANCE STANDARDS	MONITORING METHODS	MONITORING INTERVAL
1. 100 PERCENT SURVIVAL OF ALL INSTALLED NATIVE TREES AND SHRUBS ONE-YEAR POST INSTALLATION. 2. ESTABLISHMENT OF TRANSECTS IN MITIGATION MONITORING PLANTING AREAS FOR FIVE YEARS OF COVERAGE DATA. 3. FOR PLANT COVER AND SURVIVAL: TREE AND SHRUB COVER (POND PLANTING AREAS ONLY): >60% BY YEAR 3, 85% BY YEAR 5, TREE AND SHRUB SURVIVAL (ALL PLANTING AREAS): 100% BY YEAR 1, 85% BY YEAR 3, 60% BY YEAR 5	1. TOTAL PLANT COUNT OF INSTALLED TREES AND SHRUBS SHALL DETERMINE ONE YEAR WARRANTY AND PERFORMANCE STANDARD OF SURVIVAL. 2. INSTALLED TREE AND SHRUB COVERAGE SHALL BE ESTIMATED USING THE LINE-INTERCEPT METHOD ALONG TRANSECTS ESTABLISHED IN THE MITIGATION AREAS (AS NOTED IN PERFORMANCE STANDARDS) 3. PHOTOGRAPHIC DOCUMENTATION SHALL OCCUR WITH EACH MONITORING FROM ESTABLISHED PHOTOPOINTS TO PROVIDE ADDITIONAL DOCUMENTATION OF PLANT SUCCESS.	YEARS 1, 2, 3, 4 AND 5 (VEGETATION) YEARS 1, 2, 3, 4 AND 5 (VEGETATION)
4. AT LEAST 2 NATIVE TREE SPECIES AND 4 NATIVE SHRUB SPECIES SHALL BE ESTABLISHED IN THE POND PLANTING AREA AND WETLAND INFILL PLANTING AREAS. AT LEAST 2 NATIVE CONIFER SPECIES SHALL BE ESTABLISHED IN THE BUFFER INFILL PLANTING AREAS.		YEARS 1, 2, 3, 4 AND 5 (VEGETATION)
5. UP TO 20% OF ANY STRATUM CAN BE COMPOSED OF DESIRABLE NATIVE VOLUNTEERS WHEN MEASURING COVER. NO MORE THAN 10% COVER OF NON-NATIVE OR OTHER INVASIVES, E.G., HIMALAYAN BLACKBERRY, EVERGREEN BLACKBERRY, REED CANARYGRASS, SCOTS BROOM, ENGLISH IVY, MORNING GLORY, ETC. IS PERMISSIBLE IN ANY MONITORING YEAR. BOND HOLDERS ARE ENCOURAGED TO MAINTAIN MITIGATION SITES WITHIN THESE STANDARDS THROUGHOUT THE MONITORING PERIOD, TO AVOID CORRECTIVE MEASURES. NO JAPANESE KNOTWEED SHALL BE PRESENT WITHIN ANY MITIGATION SITE DURING YEARS1-5.		YEARS 1, 2, 3, 4 AND 5 (VEGETATION)
6. IN-WATER FEATURES INCLUDING WEIRS, LOG JAMS, INLET, OUTLET, BANK LOGS, SWEEPER AND STRAINER LOGS WILL BE INSPECTED TO DETERMINE IF THEY ARE SECURE, NOT CAUSING SECONDARY EROSION INLET AND OUTLET, AND FUNCTIONING AS DESIGNED PER THE APPROVED PLANS. THE TWO V-WEIR DROP POOLS WILL BE INSPECTED TO ENSURE THE DESIGNED 8-INCH MAXIMUM DROP IS NOT BEING EXCEEDED.	1. VISUAL INSPECTION DURING VEGETATION MONITORING	YEARS 1, 2, 3, 4 AND 5

4.0 MONITORING PLAN

MITIGATION MONITORING SHALL BE CONDUCTED BY A WETLAND BIOLOGIST FOR FIVE (5) YEARS WHICH INCLUDES THE INSTALLATION INSPECTION (ONE YEAR WARRANTY INSPECTION). THE OBJECTIVE OF THE MONITORING PROGRAM SHALL BE TO ASSESS REVEGETATION SUCCESS. REPORTS DESCRIBING MONITORING RESULTS SHALL BE SUBMITTED TO THE CITY OF BELLEVUE, DEPARTMENT OF PLANNING AND URBAN DEVELOPMENT BY DECEMBER 31 OF YEARS 1 THROUGH 5. THE MONITORING RESULTS SHALL BE RELATED TO THE PERFORMANCE STANDARDS AND IF WARRANTED, RECOMMENDATIONS SHALL BE MADE BASED ON THESE FINDINGS.

4.1 ESTABLISHMENT OF SENSITIVE AREAS

ENCROACHMENT INTO SENSITIVE AREAS SHALL BE MONITORED DURING EACH VISIT. THE SENSITIVE AREAS SHALL BE INSPECTED FOR CLEARING, TRASH DUMPING AND OTHER UNAUTHORIZED DISTURBANCES. ANY ENCROACHMENTS IN THE SENSITIVE AREAS SHALL BE NOTED AND DIRECTED TO CITY OF BELLEVUE'S ATTENTION.

4.2 VEGETATION ESTABLISHMENT

ALL MITIGATION PLANTINGS SHALL BE MONITORED FOR 5 YEARS AND SHALL INCLUDE REPRESENTATIVE SAMPLING FOR COVER, USING THE LINE-INTERCEPT METHOD ALONG TRANSECTS. OVERVIEW PHOTOGRAPHS SHALL BE TAKEN FROM CONSISTENT PHOTOPOINTS. ALL PLANTED TREES AND SHRUBS SHALL BE EVALUATED IN YEARS 1, 2, 3, 4, AND 5 TO DOCUMENT VEGETATION DEVELOPMENT. THE INITIAL MONITORING SHALL BE A COMPLETE CENSUS OF PLANTINGS AND SHALL OCCUR 1 YEAR AFTER INSTALLATION IN ORDER TO IMPLEMENT THE ONE YEAR WARRANTY TO BE PROVIDED BY THE LANDSCAPE CONTRACTOR.

4.3 MITIGATION MAINTENANCE

IF NECESSARY, MAINTENANCE ACTIONS WILL BE RECOMMENDED BY THE MONITORING BIOLOGIST. MAINTENANCE WITHIN THE MITIGATION AREAS SHALL BE PERFORMED BY THE LANDSCAPE CONTRACTOR DURING THE ONE YEAR WARRANTY PERIOD. FOLLOWING THE ONE YEAR WARRANTY PERIOD, MAINTENANCE SHALL BE PERFORMED AS NECESSARY TO ENSURE MITIGATION GOALS AND OBJECTIVES ARE MET. IMPLEMENTATION OF MAINTENANCE ACTIONS IS THE RESPONSIBILITY OF THE PROJECT PROPONENT (CITY OF BELLEVUE).

5.0 MITIGATION SEQUENCING

CONSTRUCTION OF THE MITIGATION SITES SHALL GENERALLY INCLUDE:

1. A PRE-CONSTRUCTION MEETING;
2. MARKING LIMIT OF WORK FOR MITIGATION BOUNDARIES;
3. REMOVAL OF INVASIVE SPECIES AND INSTALLATION OF PLANTS AS SPECIFIED;
4. POST-CONSTRUCTION MEETING BETWEEN ALL INVOLVED PARTIES;
5. REMOVAL OF LIMIT OF WORK DEMARCATIONS;
6. IMPLEMENTATION OF MONITORING PROGRAM;
7. ON-GOING MAINTENANCE AS NECESSARY.

6.0 CONSTRUCTION OBSERVATION

THE WETLAND BIOLOGIST OR LANDSCAPE ARCHITECT (CONSTRUCTION OBSERVER) SHALL BE ON-SITE PERIODICALLY DURING THE IMPLEMENTATION OF THE MITIGATION AREA TO REVIEW THE PLANT INSTALLATION. THE RESPONSIBILITIES OF THE MITIGATION MONITOR SHALL INCLUDE: RESPONDING TO CONTRACTOR QUESTIONS REGARDING UNIQUE CONSTRUCTION OR PLANTING TECHNIQUES; REVIEW OF CONSTRUCTION MATERIALS AND NURSERY STOCK, AND REVIEW OF PLANT LOCATIONS. IT SHALL BE THE RESPONSIBILITY OF THE CONTRACTOR TO VERIFY THAT PLAN SPECIFICATIONS HAVE BEEN MET.

7.0 CONTINGENCY PLAN

THE CONTINGENCY PLAN SHALL PROVIDE REMEDIATION FOR THE MITIGATION GOALS THAT HAVE NOT BEEN MET. IF THE DESIRED MITIGATION GOALS, AS MEASURED BY THE MONITORING PROGRAM AND PERFORMANCE STANDARDS, HAVE NOT BEEN MET AND CANNOT BE ACHIEVED THROUGH ROUTINE MAINTENANCE, THEN A DETERMINATION BY CITY OF BELLEVUE AND THE PROJECT PROPONENT MAY BE MADE TO REQUIRE SUBMITTAL OF A CONTINGENCY PLAN. AFTER WRITTEN APPROVAL BY THE CITY, A CONTINGENCY PLAN SHALL BE IMPLEMENTED THAT COMPENSATES FOR THE FAILED GOALS OF THE APPROVED MITIGATION PLAN. IF THE CONTINGENCY PLAN IS SUBSTANTIAL, THE CITY SHALL EXTEND THE MONITORING PERIOD.

APPENDIX E

Fish Salvage Plan

This page intentionally left blank.

FISH SALVAGE PLAN

CITY OF BELLEVUE

COAL CREEK OFF-LINE SEDMENT POND

Fish salvage is required during both construction and maintenance. The individuals conducting fish salvage must contact the WDFW local area habitat biologist at least one week prior to conducting fish salvage, have a valid WDFW Scientific Collection Permit, and the crew leader will have at least 100 hours of experience electrofishing and will have attended the Backpack Electrofishing and Fish Handling Techniques training offered by the Northwest Environmental Training Center. The following is the proper sequence for fish exclusion:

1. Isolate the project area (install block nets).
2. Install minnow traps and check daily.
3. Dip or seine net exclusion.
4. Electrofish project area.
5. Salvage during dewatering.
6. Inspect dewatered area for any remaining fish or other aquatic resources.
7. Identify and release fish.
8. Inspect work area daily.
9. Remove block nets.

Isolate the Project Areas. Project areas are defined as the inlet and outlet of the side channel, and location of the constructed log jam. Block nets will be installed at the upstream and downstream project limits to isolate each project area to prevent fish and other aquatic organisms from moving into the work area. Block net mesh size, length, type of material, and depth will vary based on site conditions. Generally, block net mesh size is the same as seine material (9.5 mm stretched). Block nets will be installed securely along both banks and in channel to prevent failure during unforeseen rain events or debris accumulation. Some locations may require additional block net support such as galvanized hardware cloth, additional stakes, or metal fence posts. Block nets will be left in place throughout the construction period, and will be checked daily for leaf and debris buildup to ensure proper function.

A biologist will be designated to monitor and maintain the nets. The flow rate in the stream and the amount of leaves and other debris collected on the net will determine how often the nets need to be checked. Once the stream reach has been isolated, all attempts to remove fish and other aquatic life will be made with the least amount of handling.

Install and Check Minnow Traps. The use of minnow traps is the first level of fish removal as it is the least detrimental, but will not capture all fish within the project areas. Minnow traps will be deployed in the deepest areas, and baited with canned salmon. Each minnow trap will be inspected daily. Each minnow trap will be tagged with waterproof labels that list the project proponent, project biologist, contact information including phone number, and valid scientific collection permit number. Minnow traps will be deployed for a minimum of two consecutive days.

Electrofishing. Review the Scientific Collection Permit and contact the WDFW local area habitat biologist at least one-week prior to fish salvage. Electrofishing of the project areas will commence one day prior to dewatering, after minnow traps have been removed. Electrofishing will occur while moving upstream and will continue until no more fish are captured during three consecutive passes. The electrofisher will be set to use direct current at the lowest voltage and pulse rate needed to effectively capture fish based on water temperature and conductivity. No electrofishing will occur when visibility is less than one foot or water temperature is below 4 degrees Celsius or above 18 degrees Celsius. Conductivity and stream temperature will be measured and recorded prior to electrofishing. Conductivity measurements will be used to set initial electrofisher settings, while stream temperature will be measured hourly.

Salvage during Dewatering. A biologist will be present during dewatering and use dip nets to remove any remaining aquatic vertebrates observed stranded during dewatering. The biologist will scour the project area after dewatering and salvage all remaining aquatic vertebrates. Salvage during dewatering is the final action designed to ensure most, if not all, aquatic vertebrates are safely removed from the dewatered project areas prior to construction of the inlet, outlet, and installation of the constructed log jam.

Fish Release. Regardless of capture technique, fish should be handled properly. A healthy environment for the stressed fish must be provided and all fish should be released as soon as possible. There should not be overcrowding in the buckets and holding time should be minimized. Large fish will be kept separated from smaller prey-sized fish to avoid predation during containment. Water to water transfers, the use of shaded or dark containers, and supplemental oxygen shall be used during fish handling operations. Aquatic vertebrates shall be released to a location upstream of the project reach and block net. They will be released into an area that provides the best available habitat. Several buckets will be available with clean stream water to hold the fish until counting and release can be completed. These buckets will be equipped with air pumps to maintain proper dissolved oxygen levels. Frequent monitoring of bucket temperature and well being of the specimens should be done to assure that all specimens will be released unharmed. Perforated buckets may also be used and placed upstream of the block nets until the fish are counted.

Remove Block Nets. Block nets will be removed, following completion of the activity, as soon as the work area is stabilized. Block nets will not be left in place for an extended amount of time. Block nets will be removed with care and checked for aquatic vertebrates.

Documentation. The results of the fish capture effort(s) will be presented to the City of Bellevue, and WDFW via annual reporting requirements associated with the Scientific Collection Permit.