DEVELOPMENT SERVICES DEPARTMENT
ENVIRONMENTAL COORDINATOR
11511 MAIN ST., P.O. BOX 90012
BELLEVUE, WA 98009-9012

OPTIONAL DETERMINATION OF NON-SIGNIFICANCE (DNS) NOTICE MATERIALS

The attached materials are being sent to you pursuant to the requirements for the Optional DNS Process (WAC 197-11-355). A DNS on the attached proposal is likely. This may be the only opportunity to comment on environmental impacts of the proposal. Mitigation measures from standard codes will apply. Project review may require mitigation regardless of whether an EIS is prepared. A copy of the subsequent threshold determination for this proposal may be obtained upon request.

File No.	09-124777-WG
Project Name/Address:	Cabrera Pier Project 2009 Killarney Way
Publish:	November 12, 2009
Minimum Comment Period:	**November 30, 2009**

Materials included in this Notice:

- ☒ Blue Bulletin
- ☒ Checklist
- ☒ Vicinity Map
- ☒ Site Plan
- ☒ Other: Plans

ENVIRONMENTAL CHECKLIST

4/18/02

Thank you in advance for your cooperation and adherence to these procedures. If you need assistance in completing the checklist or have any questions regarding the environmental review process, please visit or call the Permit Center (425-452-6864) between 8 a.m. and 4 p.m., Monday through Friday (Wednesday, 10 to 4). Our TTY number is 425-452-4636.

INTRODUCTION

Purpose of the Checklist:

The State Environmental Policy Act (SEPA), Chapter 43.21c RCW, requires all governmental agencies to consider the environmental impacts of a proposal before making decisions. An environmental impact statement (EIS) must be prepared for all proposals with probable significant adverse impacts on the quality of the environment. The purpose of this checklist is to provide information to help you and the City of Bellevue identify impacts from your proposal (and to reduce or avoid impacts from the proposal, if it can be done) and to help the City decide whether an EIS is required.

Instructions for Applicants:

This environmental checklist asks you to describe some basic information about your proposal. Answer the questions briefly, with the most precise information known, or give the best description you can. You must answer each question accurately and carefully, to the best of your knowledge. In most cases, you should be able to answer the questions from your own observations or project plans without the need to hire experts. If you really do not know the answer or if a question does not apply to your proposal, write "do not know" or "does not apply." Giving complete answers to the questions now may avoid unnecessary delays later.

Some questions ask about governmental regulations such as zoning, shoreline, and landmark designations. Answer these questions if you can. If you have problems, the Planner in the Permit Center can assist you.

The checklist questions apply to all parts of your proposal, even if you plan to do them over a period of time or on different parcels of land. Attach any additional information that will help describe your proposal or its environmental effects. Include reference to any reports on studies that you are aware of which are relevant to the answers you provide. The City may ask you to explain your answers or provide additional information reasonably related to determining if there may be significant adverse impacts.

Use of a Checklist for Nonproject Proposals: *A nonproject proposal includes plans, policies, and programs where actions are different or broader than a single site-specific proposal.*

For nonproject proposals, complete the Environmental Checklist even though you may answer "does not apply" to most questions. In addition, complete the Supplemental Sheet for Nonproject Actions available from Permit Processing.

For nonproject actions, the references in the checklist to the words *project*, *applicant*, and *property* or *site* should be read as *proposal*, *proposer*, and *affected geographic area*, respectively.

Attach an 8 ½" x 11 vicinity map which accurately locates the proposed site.

RECEIVED
SEP 08 2004
PERMIT PROCESSING

CITY OF BELLEVUE
DEPARTMENT OF PLANNING AND COMMUNITY DEVELOPMENT

ENVIRONMENTAL CHECKLIST

Purpose of checklist:

The State Environmental Policy Act (SEPA), chapter 43.21C RCW, requires all governmental agencies to consider the environmental impacts of a proposal before making decisions. An environmental impact statement (EIS) must be prepared for all proposals with probable significant adverse impacts on the quality of the environment. The purpose of this checklist is to provide information to help you and the agency identify impacts from your proposal (and to reduce or avoid impacts from the proposal, if it can be done) and to help the agency decide whether an EIS is required.

Instructions for applicants:

This environmental checklist asks you to describe some basic information about your proposal. Governmental agencies use this checklist to determine whether the environmental impacts of your proposal are significant, requiring preparation of an EIS. Answer the questions briefly, with the most precise information known, or give the best description you can.

You must answer each question accurately and carefully, to the best of your knowledge. In most cases, you should be able to answer the questions from your own observations or project plans without the need to hire experts. If you really do not know the answer, or if a question does not apply to your proposal, write "do not know" or "does not apply." Complete answers to the questions now may avoid unnecessary delays later.

Some questions ask about governmental regulations, such as zoning, shoreline, and landmark designations. Answer these questions if you can. If you have problems, the governmental agencies can assist you.

The checklist questions apply to all parts of your proposal, even if you plan to do them over a period of time or on different parcels of land. Attach any additional information that will help describe your proposal or its environmental effects. The agency to which you submit this checklist may ask you to explain your answers or provide additional information reasonably related to determining if there may be significant adverse impact.

Use of checklist for nonproject proposals:

Complete this checklist for nonproject proposals, even though questions may be answered "does not apply." in addition, complete the supplemental sheet for nonproject actions (part D).

For nonproject actions, the references in the checklist to the words "project," "applicant," and "property or site" should be read as "proposal," "proposer," and "affected geographic area," respectively.

A. BACKGROUND

1. Name of proposed project, if applicable: **Cabrera Pier Project**

2. Name of applicant: **Luis Cabrera**

3. Tax parcel number: **062405 9077**

4. Address and phone number of applicant and contact person:

Applicant:
Luis Cabrera
2009 101st Ave SE (Killarney Way)
Bellevue WA 98004
425-503-7030
Contact Person:
David Douglas, Permit Coordinator
Waterfront Construction
10315 19th Ave SE, Suite 106
Everett, WA 98208
Ph: 425-357-0312
Fax: 425-357-0320
daved@waterfrontconstruction.com

5. Date checklist prepared:
September 1, 2009

6. Agency requesting checklist:
City of Bellevue

7. Proposed timing or schedule (including phasing, if applicable):
As soon as permits allow and within authorized work windows.

8. Do you have any plans for future additions, expansion, or further activity related to or connected with this proposal? **No.** If yes, explain.

9. List any environmental information you know about that has been prepared, or will be prepared, directly related to this proposal.
None. The project will be submitted to federal agencies using the Reference Biological Evaluation completed for the Corps RGP-1 and RGP3.

10. Do you know whether applications are pending for governmental approvals of other proposals directly affecting the property covered by your proposal? If yes, explain. **None known.**

11. List any government approvals or permits that will be needed for your proposal, if known.
Shoreline Substantial Development Permit- City of Bellevue
SEPA Determination- City of Bellevue
Building Permit-City of Bellevue
Demolition Permit- City of Bellevue
Hydraulic Project Permit- Washington St. Department of Fish and Wildlife
Section 10 Permit- U. S. Army Corps of Engineers

12. Give a brief, complete description of your proposal, including the proposed uses and the site of the project. There are several questions later in this checklist that ask you to describe certain aspects of your proposal. You do not need the repeat those answers on this page. (Lead agencies may modify this form to include additional specific information on project description.)
   - **Construct a fully grated 312s/f pier consisting of a 4' wide x 78' long main walkway with 4' x 74' (296s/f) waterward of the OHWL.**
   - **The pier will be supported by (2) 4" diameter (upland) and (2) 4" and (4) 6" diameter (inwater) steel piles. The most waterward pile set will be battered.**
   - **Install (1) freestanding boatlift and (1) portable jet-ski lift.**
   - **Install a native riparian planting plan.**

13. Location of the proposal. Give sufficient information for a person to understand the precise location of your proposed project, including a street address, if any, and section, township, and range, if known. If a proposal would occur over a range of area, provide the range
Address:
2009 101st Ave SE (Killarney Way)
Bellevue, WA 98004

¼ Section: SE Section: 06 Township: 24N Range: 05E

Directions: **From I-405 South take exit 13B, and merge onto NE 8th St, turn left at Bellevue Way NE, turn right at SE 3rd St, turn left onto 101st Ave SE, arrive at 2009 101st Ave SE (Killarney Way) on the left.**

Legal Description:
POR OF GL 4 & 5-BEG AT PT ON N LN OF S 22.62 FT OF GL 4 SD PT BEING 166 FT W OF WLY MGN OF BURROUGHS RD TH N 88-30-41 W 104 FT TH S 00-11-17 E 165.07 FT TH S 88-30-41 E 132.23 FT TH N 02-00-29 E 49.36 FT TH N 64-47-45 W 20.92 FT TH N 06-28-00 W 95 FT TH N 02-00-29 E 13.33 FT TO BEG TGW UND 1/2 INT IN POR OF GL 5 & SH LDS ADJ BEG AT PT ON S LN OF N 142.38 FT OF GL 5 SD PT BEING 203.60 FT W OF WLY MGN OF BURROUGHS RD TH N 88-30-41 W 86.68 FT TH S 00-11-17 E 19.98 FT TH S 83-50-29 W 23.13 FT TH S 48-44-09 W TO OUTER LIMITS OF SH LDS TH SELY ALG SD OUTER LIMITS TO PT WCH BEARS S 57-04-48 W FRM BEG TH N 57-04-48 E TO BEG LESS POR IF ANY LY SELY OF FOLG LN-BEG AT PT ON WLY LN OF BURROUGHS RD SD PT BEING 127.38 FT S OF N LN OF GL 5 TH N 89-59-06 W 250 FT M/L TO PT ON OLD SH LN WCH IS N 89-59-06 W 383.43 FT M/L FRM E LN SD GL TH S 57-49-45 W 28.16 FT TO S LN OF N 142.38 FT OF GL 5 & TPOB TH CONTG S 57-49-45 W TO EXISTING SH LN OF LAKE

TO BE COMPLETED BY APPLICANT:

B. ENVIRONMENTAL ELEMENTS

1. Earth

a. General description of the site (circle one): Flat, rolling, hilly, steep slopes, mountainous, other: **gentle slope.**

b. What is the steepest slope on the site (approximate percent slope)? **Steepest slope on the property is approximately 5% and the yard area at the shoreline is relatively flat.**

c. What general types of soils are found on the site (for example, clay, **sand, gravel**, peat, muck)? If you know the classification of agricultural soils, specify them and note any prime farmland. **No prime farmland soils are present.**

d. Are there surface indications or history of unstable soils in the immediate vicinity? **None known.** If so, describe.

e. Describe the purpose, type, and approximate quantities of any filling or grading proposed. Indicate source of fill. **None.**

f. Could erosion occur as a result of clearing, construction, or use? **No.** If so, generally describe.

g. About what percent of the site will be covered with impervious surfaces after project construction (for example, asphalt or buildings)? **The amount of impervious surface will not change.**

h. Proposed measures to reduce or control erosion, or other impacts to the earth, if any: **As a precaution and to implement Best Management Practices, a silt floatation curtain will be placed in the water to contain debris during construction and will be maintained in working order the entire time. Although a vibratory pile driver is planned for pile driving, if a drop hammer is required for driving or proofing piles, sound attenuation measures recommended by USFWS and NOAA-F will be implemented. This includes a minimum 6" block of wood between drop hammer and pile.**

2. Air

a. What type of emissions to the air would result from the proposal (i.e., dust, automobile, odors, industrial wood smoke) during construction and when the project is completed? If any, generally describe and give approximate quantities if known. **During construction, the running of equipment will contribute some emissions in the area. Once construction is complete, there will be no emissions.**

b. Are there any off-site sources of emissions or odor that may affect your proposal? **No.** If so, generally describe.

c. Proposed measures to reduce or control emissions or other impacts to air, if any: **The equipment used at the project site will pass all emission standards required by the state agencies.**

3. Water

a. Surface:

1) Is there any surface water body on or in the immediate vicinity of the site (including year-round and seasonal streams, saltwater, lakes, ponds, wetlands)? If yes, describe type and provide names. If appropriate, state what stream or river it flows into. **Yes. Lake Washington which flows into the Ship Canal then into the Puget Sound.**

2) Will the project require any work over, in, or adjacent to (within 200 feet) the described waters? **Yes.** If yes, please describe and attach available plans. **See attached drawings.**

3) Estimate the amount of fill and dredge material that would be placed in or removed from surface water or wetlands and indicate the area of the site that would be affected. Indicate the source of fill material. **None.**

4) Will the proposal require surface water withdrawals or diversions? **No.** Give general description, purpose, and approximate quantities if known.

5) Does the proposal lie within a 100-year floodplain? **No.** If so, note location on the site plan.

6) Does the proposal involve any discharges of waste materials to surface waters? **No.** If so, describe the type of waste and anticipated volume of discharge.

b. Ground:

1) Will ground water be withdrawn, or will water be discharged to ground water? **No.** Give general description, purpose, and approximate quantities if known.

2) Describe waste material that will be discharged into the ground from septic tanks or other sources, if any **None.** (for example: Domestic sewage; industrial, containing the following chemicals; agricultural; etc.). Describe the general size of the system, the number of such systems, the number of houses to be served (if applicable), or the number of animals or humans the system(s) are expected to serve. **N/A**

c. Water Runoff (including storm water):

1) Describe the source of runoff (including storm water) and method of collection and disposal, if any (include quantities, if known). Where will this water flow? Will this water flow into other waters? If so, describe. **Storm water follows existing grade and this will not be changed.**

2) Could waste materials enter ground or surface waters? **No.** If so, generally describe.

d. Proposed measures to reduce or control surface, ground, or runoff water impacts, if any: **None.**

4. Plants

a. Check or circle types of vegetation found on the site:
√ **deciduous tree:** alder, maple, aspen,
√ **evergreen tree:** fir, cedar, blue spruce, pine, hemlock, other shrubs
√ **grass**
√ **shrubs**
_ pasture
_ crop or grain
_ wet soil plants: cattail, buttercup, bullrush, skunk cabbage, other
_ water plants: eelgrass, milfoil
√ **other types of vegetation: ornamental plants**

b. What kind and amount of vegetation will be removed or altered? **Non-native Himalayan Blackberries will be removed to accommodate native planting plan.**

c. List threatened or endangered species known to be on or near the site. **None.**

d. Proposed landscaping, use of native plants, or other measures to preserve or enhance vegetation on the site, if any: **None.**

5. Animals

a. Circle any birds and animals that have been observed on or near the site or are known to be on or near the site: birds: **hawk, heron, eagle, songbirds,** other: mammals: deer, bear, elk, beaver, other: fish: bass, **salmon, trout,** herring, shellfish, other: **ducks and geese.**

b. List any threatened or endangered species known to be on or near the site.
Puget Sound Chinook salmon and bull trout, which are federally listed as "Threatened" under the ESA, are known to spawn/migrate in the Lake Washington watershed. Juvenile salmon may use the nearshore waters of the project area. Bald Eagles use Lake Washington for foraging. There are no spawning streams in the vicinity of the project.

c. Is the site part of a migration route? If so, explain.
Juvenile salmonids migrate along the lake shoreline. Although the site could be used by migratory waterfowl, other than its proximity to Lake Washington, no particular site characteristics make the site any more attractive to waterfowl than other Lake Washington shoreline properties.

d. Proposed measures to preserve or enhance wildlife, if any:

- **The following conservation and impact reduction measures listed below will be used for the project:**
- **The dock will have a fully grated surface with 46% open area to allow light transmission to reach the lake waters below greatly reducing the effective overwater coverage.**
- **The bottom of the dock will be 18" above and the dock surface 30" above the OHWL to allow light beneath.**
- **Only 296 s/f of the pier is waterward of the OHWL, much less than the 480s/f allowed by the Corps RGP-3 (and the City of Bellevue).**
- **No portion of the pier is wider than 4' and there are no finger piers or ells associated with the project.**
- **The smallest number and diameter steel piles will be used to minimize the amount of structure in the water and disturbance to the substrate.**
- **Glu-lam stringers will be used to allow the longest spans possible between piles.**
- **The construction barge will not be allowed to ground out on the lake bottom at anytime.**
- **A vibratory pile driver will be used. If a drop hammer is required by the local government for proofing of piles, sound attenuation measures recommended by NOAA-Fisheries and U. S. Fish and Wildlife will be implemented including a minimum 6" block of wood between pile and driver.**
- **Construction will take place during authorized state and federal work windows designed to protect listed species at this location on Lake Washington.**
- **Dock sections, boatlift and jet-ski lift will be prefabricated at the contractor's Lake Union facility and delivered via construction barge greatly limiting construction time at the site.**
- **Existing non native vegetation will be removed and a planting plan of native vegetation will be installed.**

6. Energy and Natural Resources

a. What kinds of energy (electric, natural gas, oil, wood stove, solar) will be used to meet the completed project's energy needs? **None.** Describe whether it will be used for heating, manufacturing, etc.

b. Would your project affect the potential use of solar energy by adjacent properties? **No.** If so, generally describe.

c. What kinds of energy conservation features are included in the plans of this proposal? **None.** List other proposed measures to reduce or control energy impacts, if any:

7. Environmental Health

a. Are there any environmental health hazards, including exposure to toxic chemicals, risk of fire and explosion, spill, or hazardous waste that could occur as a result of this proposal? **None.** If so, describe.

1) Describe special emergency services that might be required.
No requirement for emergency service is anticipated. However, should they be needed, the Washington Department of Ecology, an Emergency Response Cleanup Team, and WDFW will be contacted.

2) Proposed measures to reduce or control environmental health hazards, if any: **A hazardous spill management plan will be present on-site. Spill clean-up and containment materials will also be on-site. Included in the clean-up packets will be containment booms, materials designed to absorb petroleum produces, and plastic bags to be used for material transport. No measures to reduce or control hazards are assumed needed or proposed.**

b. Noise

1) What types of noise exist in the area which may affect your project (for example: traffic, equipment operation, other)? **None.**

2) What types and levels of noise would be created by or associated with the project on a short-term or a long-term basis (for example: traffic, construction, operation, other)? Indicate what hours noise would come from site. **Noise will be generated by construction equipment between 7am and 7pm, generally five days a week. Construction equipment and materials will be transported and operate from a barge. Noise created by the construction equipment will be transmitted through the barge, increasing noise levels above ambient conditions. The range of sound magnitude from the faintest to the loudest the human ear can hear is so large that sound pressure is expressed on a logarithmic scale in units called decibels (dB). Environmental noise is commonly "A-weighted" to simulate how an average person hears sounds. A-weighted sound**

levels are expressed in units of A-weighted decibels (dBA). U.S. Environmental Protection Agency (U.S. EPA) research found that noise associated with the normal operation of construction equipment is typically 75 to 92 dB at 46 feet (U.S. EPA 1971). These measurements are based on sound movement through air. Decibel conversion from air to water is approximately 26 dB higher (Walter 1999). Underwater noise associated with the normal operation of construction equipment will be in the 101 to 118 dB range. Point-source noise dissipates at approximately 6 dB per distance doubled (e.g., 45, 90, 180 feet) through water.

3) Proposed measures to reduce or control noise impacts, if any:
Construction will be limited to business hours during the workweek, which will minimize impacts to local residents. All materials and construction equipment will be transported via barge to and from site.

8. Land and Shoreline Use

a. What is the current use of the site and adjacent properties?
Site: **Single Family Residence**
Adjacent: **Single Family Residence**

b. Has the site been used for agriculture? **No.** If so, describe.

c. Describe any structures on the site.
Structures on the site include a single family residence and a small rock bulkhead at and behind the OHWL of Lake Washington.

d. Will any structures be demolished? **No.** If so, what?

e. What is the current zoning classification of the site? **R-1.8**

f. What is the current comprehensive plan designation of the site?
Single Family Residential

g. If applicable, what is the current shoreline master program designation of the site? **Unknown**

h. Has any part of the site been classified as an "environmentally sensitive" area? **No.** If so, specify.

i. Approximately how many people would reside or work in the completed project? **N/A.**

j. Approximately how many people would the completed project displace? **None.**

k. Proposed measures to avoid or reduce displacement impacts, if any: **None.**

l. Proposed measures to ensure the proposal is compatible with existing and project land uses and plans, if any: **The proposal is consistent with existing and projected COB uses and plans.**

9. Housing

a. Approximately how many units would be provided, if any? **N/A** Indicate whether high, middle, or low-income housing.

b. Approximately how many units, if any, would be eliminated? **N/A.** Indicate whether high, middle, or low-income housing.

c. Proposed measures to reduce or control housing impacts, if any: **N/A**

10. Aesthetics

a. What is the tallest height of any proposed structure(s), not including antennas; what is the principal exterior building material(s) proposed? **The proposed pier will be approximately 2'-6" above Ordinary High Water Line.**

b. What views in the immediate vicinity would be altered or obstructed? **None.**

c. Proposed measures to reduce or control aesthetic impacts, if any: **None needed or proposed.**

11. Light and Glare

a. What type of light or glare will the proposal produce? **None.** What time of day would it mainly occur? **N/A.**

b. Could light or glare from the finished project be a safety hazard or interfere with views? **No.**

c. What existing off-site sources of light or glare may affect your proposal? **None.**

d. Proposed measures to reduce or control light and glare impacts, if any: **None.**

12. Recreation

a. What designated and informal recreational opportunities are in the immediate vicinity? **Water recreation opportunities at the site include boating, swimming, skiing, and fishing.**

b. Would the proposed project displace any existing recreational uses? If so, describe. **No.**

c. Proposed measures to reduce or control impacts on recreation, including recreation opportunities to be provided by the project or applicant, if any: **None.**

13. Historic and Cultural Preservation

a. Are there any places or objects listed on, or proposed for, national, state, or local preservation registers known to be on or next to the site? If so, generally describe. **No.**

b. Generally describe any landmarks or evidence of historic, archaeological, scientific, or cultural importance known to be on or next to the site. **None.**

c. Proposed measures to reduce or control impacts, if any: **None.**

14. Transportation

a. Identify public streets and highways serving the site, and describe the proposed access to the existing street system. Show on site plans, if any. **The site is currently accessed from 101st Ave SE. This will not change. All project construction materials and equipment will be transported to site via barge.**

b. Is site currently served by public transit? If not, what is the approximate distance to the nearest transit stop? **N/A.**

c. How many parking spaces would the completed project have? **N/A.** How many would the project eliminate? **N/A.**

d. Will the proposal require any new roads or streets, or improvements to existing roads or streets, not including driveways? **No.** If so; generally describe (indicate whether public or private). **N/A.**

e. Will the project use (or occur in the immediate vicinity of) **water**, rail, or air transportation? If so, generally describe. **Minimal recreational boat traffic on Lake Washington occurs in this area.**

f. How many vehicular trips per day would be generated by the completed project? If known, indicate when peak volumes would occur. **N/A.**

g. Proposed measures to reduce or control transportation impacts, if any. **N/A.**

15. Public Services

a. Would the project result in an increased need for public services (for example: ire protection, police protection, health care, schools, other)? **No.** If so, generally describe.

b. Proposed measures to reduce or control direct impacts on public services, if any. **N/A.**

16. Utilities

a. Circle utilities currently available at the site: **electricity, natural gas, water, refuse service, telephone, sanitary sewer,** septic system, other.

b. Describe the utilities that are proposed for the project, the utility providing the service and the general construction activities on the site or in immediate vicinity, which might be needed. **None.**

C. SIGNATURE

The above answers are true and complete to the best of my knowledge. I understand the lead agency is relying on them to make its decision.

Signature:

Dave Douglas
Permit Coordinator
Waterfront Construction, Inc.

Date submitted: 9-8-09

2009
WASHINGTON STATE
Joint Aquatic Resources Permit Application (JARPA) Form [help]

US Army Corps of Engineers
Seattle District

AGENCY USE ONLY

Date received:

Agency reference #: _____

Tax Parcel #(s): _____

USE BLACK OR BLUE INK TO ENTER ANSWERS IN WHITE SPACES BELOW.

Part 1–Project Identification

Unique project information that makes it easy to identify. [help]

1a. Unique Project Identifier Number (UPI #) [help] • Don't have one yet? Get one at http://www.epermitting.wa.gov or call the Washington Governor's Office of Regulatory Assistance at (800) 917-0043.
257321-09-01
1b. Project Name (Examples: Smith's Dock or Seabrook Lane Development) [help]
Luis Cabrera Pier Project

Part 2–Applicant

The person or organization legally responsible for the project. [help]

2a. Name (Last, First, Middle) and Organization (if applicable)			
Luis Cabrera			
2b. Mailing Address (Street or PO Box)			
2009 101st Ave SE (Killarney Way)			
2c. City, State, Zip			
Bellevue, WA 98004			
2d. Phone (1)	**2e.** Phone (2)	**2f.** Fax	**2g.** E-mail
(425) 503-7030	( )	( )	

Part 3–Authorized Agent or Contact

Person authorized to represent the applicant about the project. (Note: Authorized agent(s) must sign 11b. of this application.) [help]

3a. Name (Last, First, Middle) and Organization (if applicable)			
David Douglas			
3b. Mailing Address (Street or PO Box)			
Waterfront Construction 10315 19th Ave SE, Suite 106			
3c. City, State, Zip			
Everett, WA 98208			
3d. Phone (1)	**3e.** Phone (2)	**3f.** Fax	**3g.** E-mail
(425) 357-0312	(206) 786-6470	(425) 357-0320	daved@waterfrontconstruction.com

RECEIVED
APR 2009
PERMIT PROCESSING

Cabrera Pier and Boatlift Project

Applicant: Luis Cabrera
Site Address: 2009 101st Ave SE (Killarney Way), Bellevue, WA 98004
County: King

Project Description

The proposal is to construct a fully grated 312s/f pier consisting of a 4' wide x 78' long main walkway with 74' (296s/f) located waterward of the OHWL. The pier will be supported by (2) 4" diameter (upland) and (2) 4" diameter and (4) 6" diameter (inwater) steel piles. The (2) most waterward piling will be battered. Install (1) freestanding boatlift and (1) portable jet-ski lift. Install a native riparian planting plan.

Construction Sequence

1. Mobilize construction barge to the site with all construction materials and equipment onboard. Moor the barge as to prevent grounding on the lake bottom at any time during construction.
2. Install silt containment curtain around work area to contain any debris that may fall into lake waters. In the event any materials enter lake waters they will be retrieved immediately and placed in debris containers on the barge.
3. Using the barge-based crane and vibratory insertion/extraction system, install (2) 4" diameter (upland), (2) 4" diameter and (4) 6" diameter (inwater) steel piles to practical refusal. If required, proof piles using a drop hammer pile driver with a 6" minimum block of wood between pile driver and pile.
4. Cut steel piling as necessary at the appropriate elevation and attach pipe collar assemblies.
5. Install pre-fabricated pier onto pipe collar assemblies and secure to piling.
6. Install (1) freestanding boatlift.
7. Install (1) portable jet-ski lift.
8. Remove silt containment curtain.
9. Demobilize and dispose of all debris at approved upland disposal site.

General Notes:

1. All treatments will be applied and fully cured prior to delivery to the site.
2. All pier sections will be prefabricated at contractor's Lake Union Facility and delivered to the site via construction barge.
3. Jet-ski lift and freestanding boatlift will be prefabricated at contractor's Lake Union Facility and delivered to the site via construction barge.
4. Native riparian planting plan will be installed by others following construction.

ATTENTION: If at any time; as a result of project activities, fish are observed in distress, a fish kill occurs, or water quality problems develop (including equipment leaks or spills), operations shall cease and the WDFW at (360) 534-8233 and Washington Department of Ecology at (425) 649-7000 shall be contacted immediately. Work shall not resume until further approval is given by the WDFW.

MATERIAL SPECIFICATIONS		
PART	**SPECIFICATIONS**	**TREATMENT**
Piling	4" & 6" Std Wall Steel	Epoxy Coated
Caps	W6 x 15 "H" Beam	HDG
Glu-Lams	6¾" x 12" DF 24F-V4	ACZA (Chemonite)
Joist	2" x 6" DF #2 or Better	ACZA (Chemonite)
Rim Joist	2" x 6" DF #2or Better	ACZA (Chemonite)
Nailers	2" x 4" DF #2 or Better	ACZA (Chemonite)
Ledgers	3" x 4" DF #2 of Better	ACZA (Chemonite)
Grating	Polypropylene	None
Hardware	Steel	Stainless or HDG

RECEIVED
SEP 18 2019
PERMIT PROCESSING

PROJECT DESIGNED BY:

Waterfront Construction Inc.

THIS DOCUMENT IS **PROPRIETARY** PROPERTY OF WATERFRONT CONSTRUCTION INC., AND IS NOT TO BE USED, IN WHOLE OR IN PART, FOR ANY OTHER PROJECT WITHOUT THE WRITTEN AUTHORIZATION OF WATERFRONT CONSTRUCTION INC.

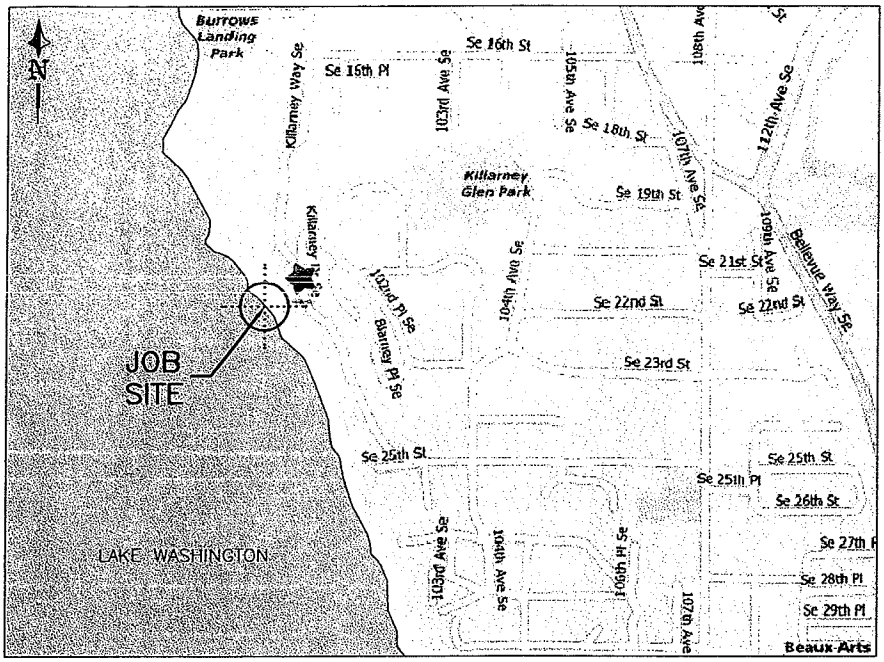

VICINITY MAP/NO SCALE

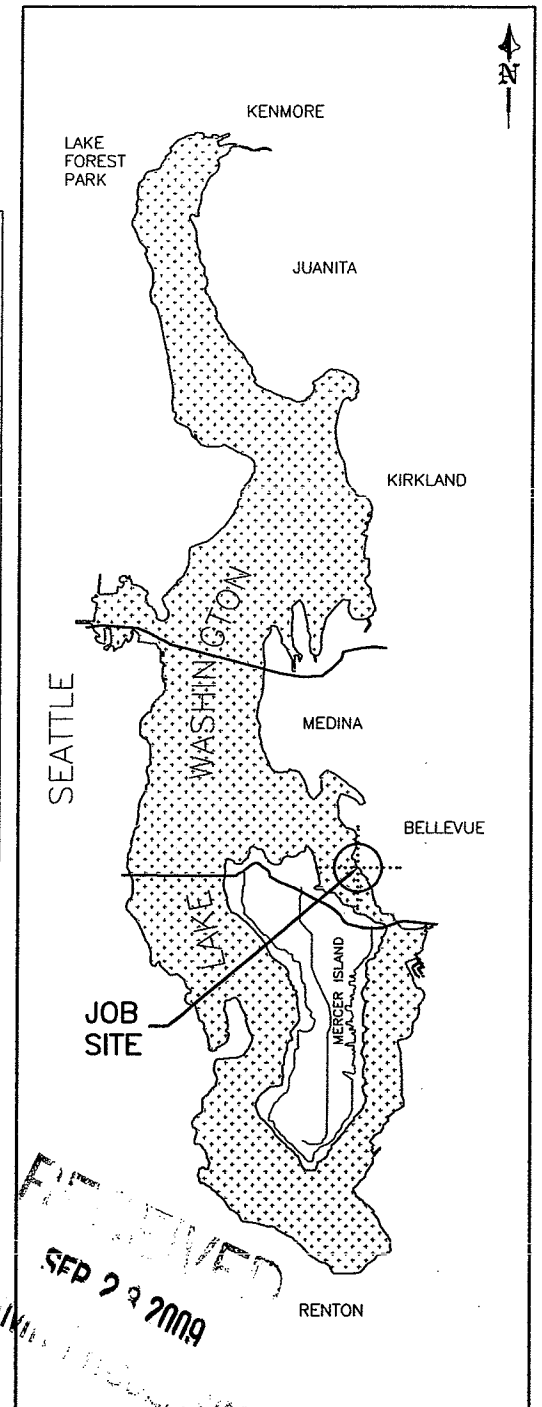

AREA MAP/Scale:1"=3miles

3 MILES 0 3 MILES

1 MILE

LEGAL DESCRIPTION

1/4 SEC: SE-06-24N-05E
TAXLOT #: 062405 9077

POR OF GL 4 & 5-BEG AT PT ON N LN OF S 22.62 FT OF GL 4 SD PT BEING 166 FT W OF WLY MGN OF BURROUGHS RD TH N 88-30-41 W 104 FT TH S 00-11-17 E 165.07 FT TH S 88-30-41 E 132.23 FT TH N 02-00-29 E 49.36 FT TH N 64-47-45 W 20.92 FT TH N 06-28-00 W 95 FT TH N 02-00-29 E 13.33 FT TO BEG TGW UND 1/2 INT IN POR OF GL 5 & SH LDS ADJ BEG AT PT ON S LN OF N 142.38 FT OF GL 5 SD PT BEING 203.60 FT W OF WLY MGN OF BURROUGHS RD TH N 88-30-41 W 86.68 FT TH S 00-11-17 E 19.98 FT TH S 83-50-29 W 23.13 FT TH S 48-44-09 W TO OUTER LIMITS OF SH LDS TH SELY ALG SD OUTER LIMITS TO PT WCH BEARS S 57-04-48 W FRM BEG TH N 57-04-48 E TO BEG LESS POR IF ANY LY SELY OF FOLG LN-BEG AT PT ON WLY LN OF BURROUGHS RD SD PT BEING 127.38 FT S OF N LN OF GL 5 TH N 89-59-06 W 250 FT M/L TO PT ON OLD SH LN WCH IS N 89-59-06 W 383.43 FT M/L FRM E LN SD GL TH S 57-49-45 W 28.16 FT TO S LN OF N 142.38 FT OF GL 5 & TPOB TH CONTG S 57-49-45 W TO EXISTING SH LN OF LAKE

LAT: +47.592475 N
LONG: -122.209189 W

REVISED
9-22-09

PURPOSE: PROVIDE PRIVATE MOORAGE	PROJECT NAME: CABRERA	PROPOSED: CONSTRUCT FULLY GRATED PIER. INSTALL (1) BOATLIFT AND (1) JETSKI LIFT. INSTALL NATIVE PLANTING PLAN.
DATUM: COE 0.0' EST 1919	REFERENCE #:	IN: LAKE WASHINGTON
ADJACENT OWNERS: (1) ENATAI LLC 2011 100TH AVE SE BELLVUE, WA. 98004 (2) LUKENS TERENCE & ANN 2015 KILLARNEY WAY BELLVUE, WA. 98004	SITE LOCATION ADDRESS: 2009 101ST AVE SE BELLEVUE, WA. 98004	NEAR: BELLEVUE
		COUNTY: KING / STATE: WA
		APPL BY: LUIS CABRERA
	DWG#: 09-31049-A.1-1	SHEET: 1 OF: 4 / DATE: 8-31-09

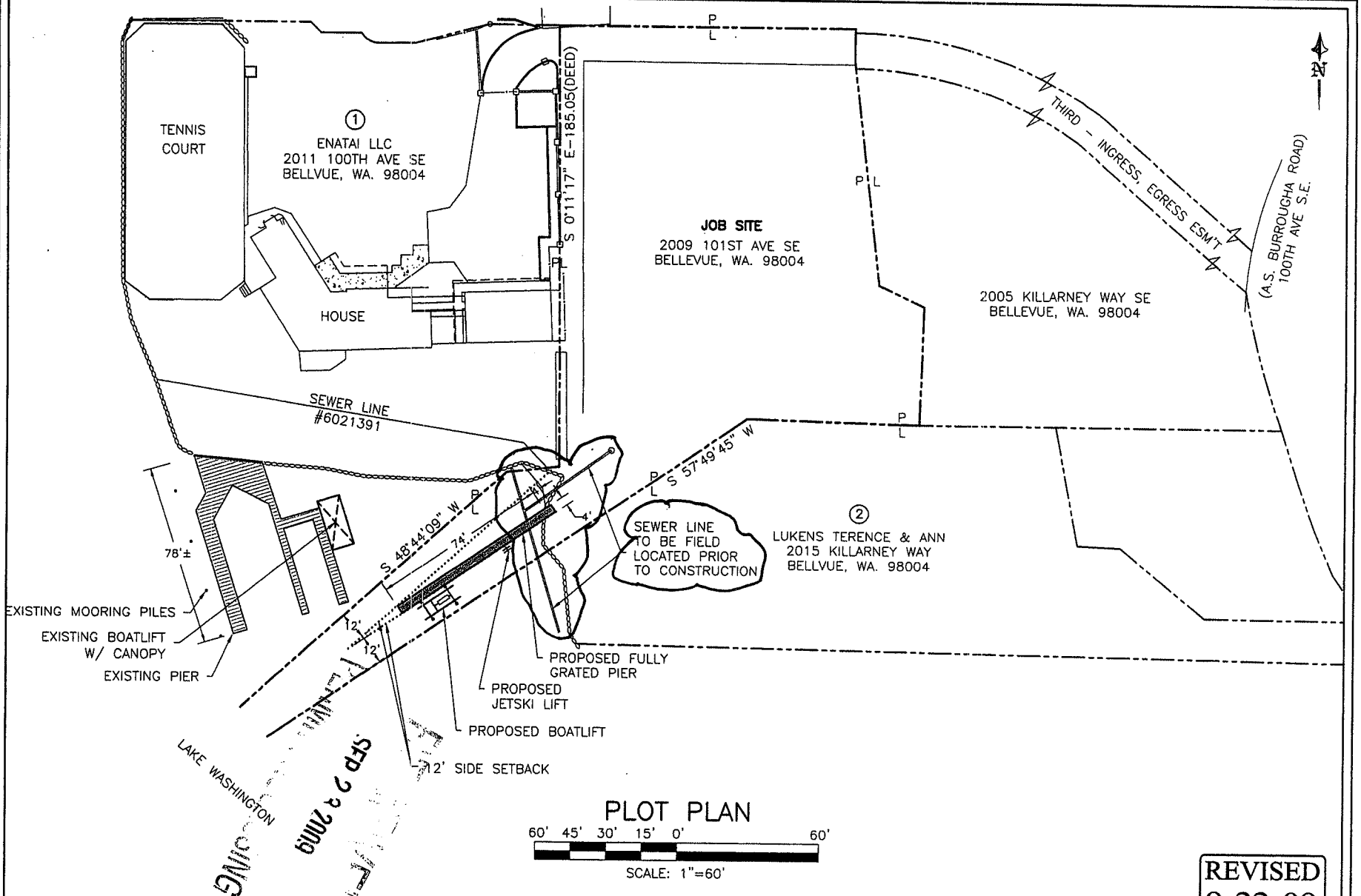

PLOT PLAN

60' 45' 30' 15' 0' 60'

SCALE: 1"=60'

REVISED 9-22-09

- CONSTRUCT FULLY GRATED 312S/F PIER WITH 4' WIDE X 78' LONG MAIN WALKWAY.
- INSTALL (2) 4" DIAMETER (UPLAND) AND (2) 4" AND (4) 6" DIAMETER (INWATER) STEEL PILES. THE MOST WATERWARD PILE SET WILL BE BATTERED.
- INSTALL (1) FREESTANDING BOATLIFT AND (1) PORTABLE JET-SKI LIFT.
- INSTALL A NATIVE RIPARIAN PLANTING PLAN.
- PILES WILL BE DRIVEN TO PRACTICAL REFUSAL USING A VIBRATORY PILE DRIVER.
- CONSTRUCTION WILL TAKE PLACE DURING AUTHORIZED WORK WINDOWS DESIGNED TO PROTECT LISTED SPECIES.
- RAMP, DOCK, BOATLIFT AND JET-SKI LIFT WILL BE PREFABRICATED AND DELIVERED TO THE SITE VIA CONSTRUCTION BARGE.
- THE CONSTRUCTION BARGE WILL NOT BE ALLOWED TO GROUND OUT ON THE LAKE BOTTOM AT ANYTIME.
- A NATIVE RIPARIAN PLANTING PLAN WILL BE INSTALLED.

REFERENCE #:	
APPLICANT: LUIS CABRERA	
PROPOSED: CONSTRUCT FULLY GRATED PIER. INSTALL (1) BOATLIFT AND (1) JETSKI LIFT.	
NEAR/AT: BELLEVUE	
SHEET: 2 OF: 4	
DATE: 8-31-09	DWG#: 09-31049-A.2-1

PROJECT DESIGNED BY:
Waterfront Construction Inc.

THIS DOCUMENT IS PROPRIETARY PROPERTY OF WATERFRONT CONSTRUCTION INC., AND IS NOT TO BE USED, IN WHOLE OR IN PART, FOR ANY OTHER PROJECT WITHOUT THE WRITTEN AUTHORIZATION OF WATERFRONT CONSTRUCTION INC.

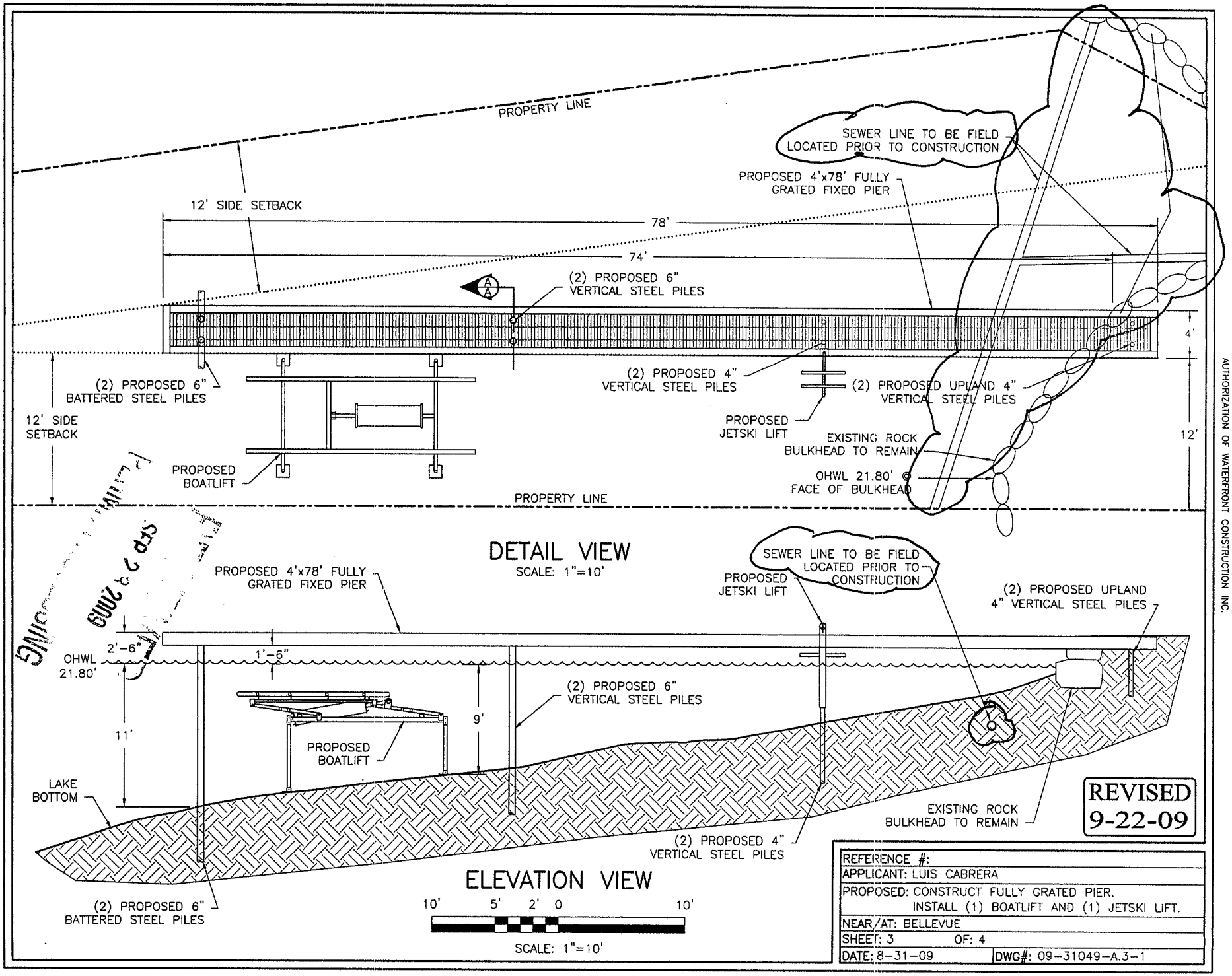

REVISED
9-22-09

REFERENCE #:	
APPLICANT: LUIS CABRERA	
PROPOSED: CONSTRUCT FULLY GRATED PIER. INSTALL (1) BOATLIFT AND (1) JETSKI LIFT.	
NEAR/AT: BELLEVUE	
SHEET: 3 OF: 4	
DATE: 8-31-09	DWG#: 09-31049-A.3-1

PROJECT DESIGNED BY:
Waterfront Construction Inc.

THIS DOCUMENT IS PROPRIETARY PROPERTY OF WATERFRONT CONSTRUCTION INC. AND IS NOT TO BE USED, IN WHOLE OR IN PART, FOR ANY OTHER PROJECT WITHOUT THE WRITTEN AUTHORIZATION OF WATERFRONT CONSTRUCTION INC.

PROJECT DESIGNED BY:
Waterfront Construction Inc.
THIS DOCUMENT IS **PROPRIETARY** PROPERTY OF WATERFRONT CONSTRUCTION INC., AND IS NOT TO BE USED, IN WHOLE OR IN PART, FOR ANY OTHER PROJECT WITHOUT THE WRITTEN AUTHORIZATION OF WATERFRONT CONSTRUCTION INC.

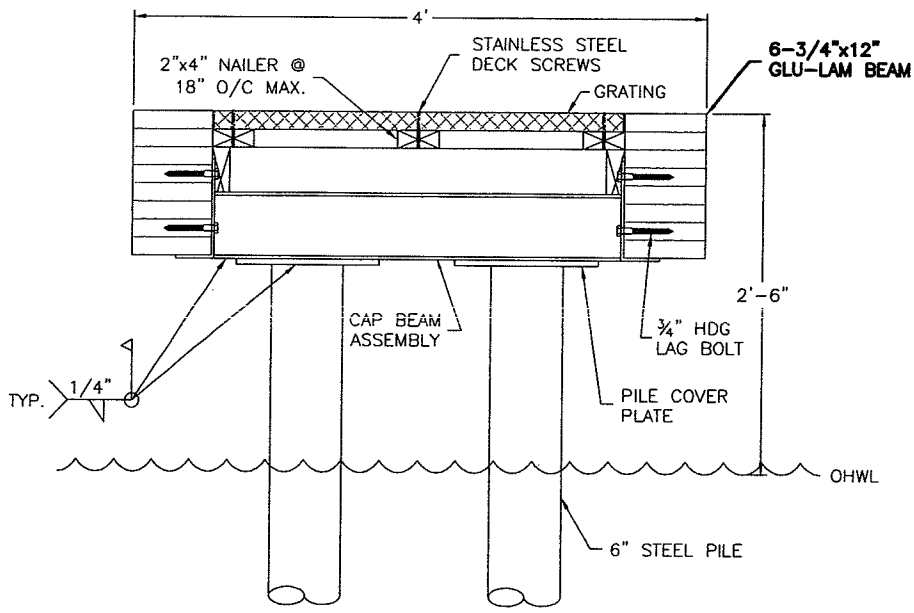

PROPOSED SECTION VIEW A–A

SCALE: 3/4"=1'

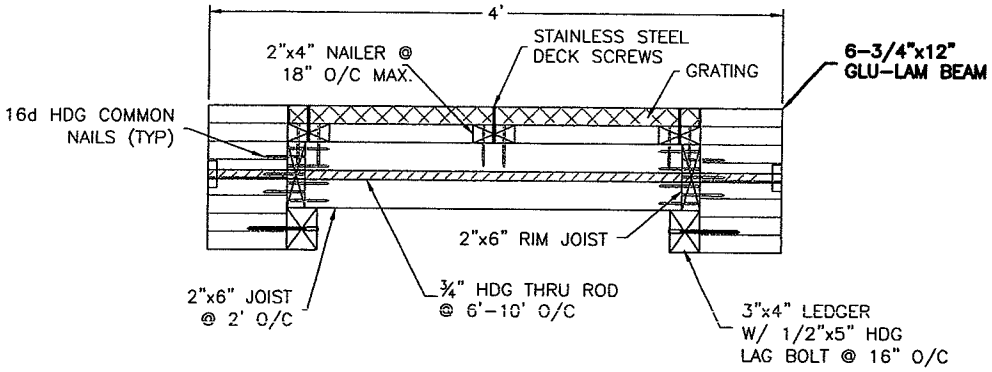

PROPOSED SECTION FRAMING A–A

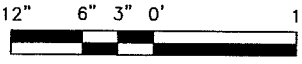

SCALE: 3/4"=1'

MATERIAL LIST

PART	SPECS	TREATMENT
PILING	4" & 6" STD WALL STEEL	EPOXY COATED
CAPS	W6x15 "H" BEAM	HDG
GLU-LAMS	6¾"x12" DF 24F-V4	ACZA
JOIST	2"x6" DF #2 OR BTR	ACZA
RIM JOIST	2"x6" DF #2 OR BTR	ACZA
NAILERS	2"x4" DF #2 OR BTR	ACZA
LEDGERS	3"x4" DF #2 OR BTR	ACZA
GRATING	POLYPROPYLENE	NONE
HARDWARE	STEEL	STAINLESS OR HDG.

SEP 23 2009

REVISED 9-22-09

REFERENCE #:	
APPLICANT: LUIS CABRERA	
PROPOSED: CONSTRUCT FULLY GRATED PIER. INSTALL (1) BOATLIFT AND (1) JETSKI LIFT.	
NEAR/AT: BELLEVUE	
SHEET: 4 OF: 4	
DATE: 8-31-09	DWG#: 09-31049-A.4-1

Luis Cabrera Existing Site Photos
2009 101st Ave SE (Killarney Way)
Bellevue, WA 98004

Project Scope: Install new fully grated 4' x 78' (4' x 74' waterward of OHWL) totaling 312ft². Install (1) boatlift, (1) jet-ski lift, and native riparian planting plan.

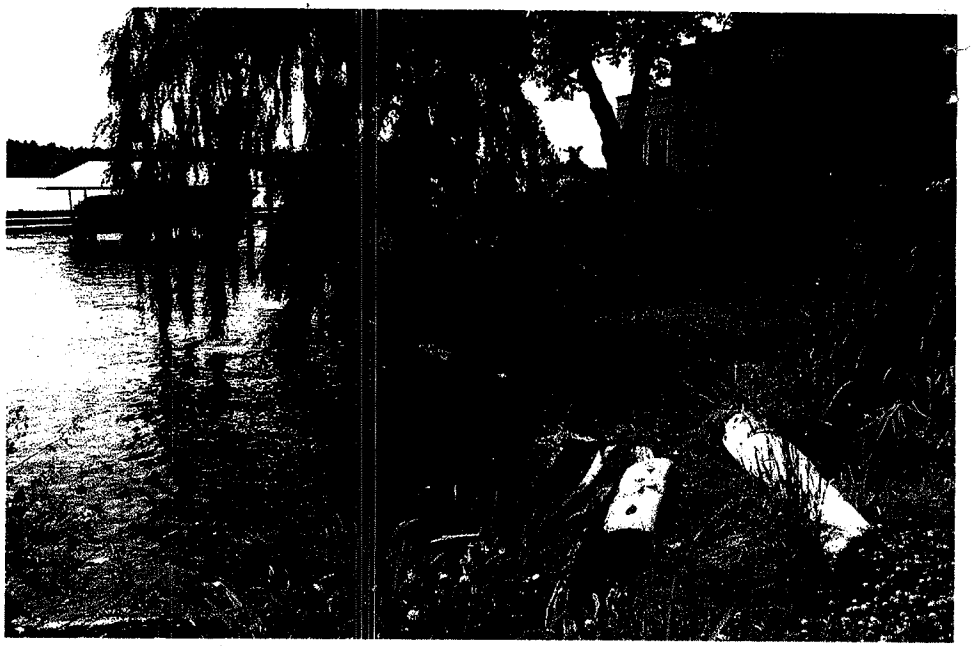

Nearshore area looking at northwest adjacent property

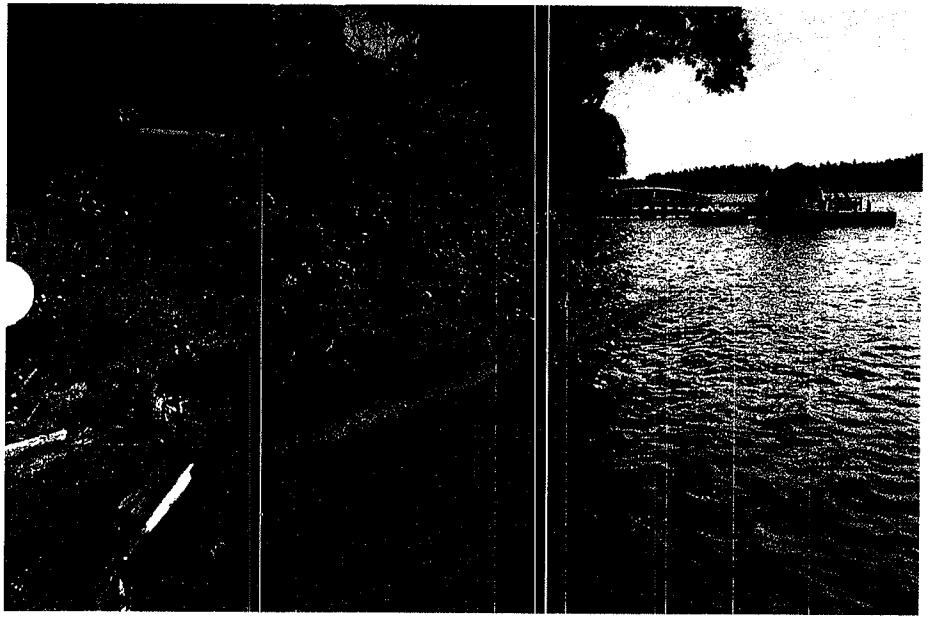

Nearshore area looking at south adjacent properties. Pier in background is 2 properties south of site.

View of upland area looking south. Blackberries to be removed.

View of existing cove area looking northwest that will be planted with native riparian and emergent vegetation.

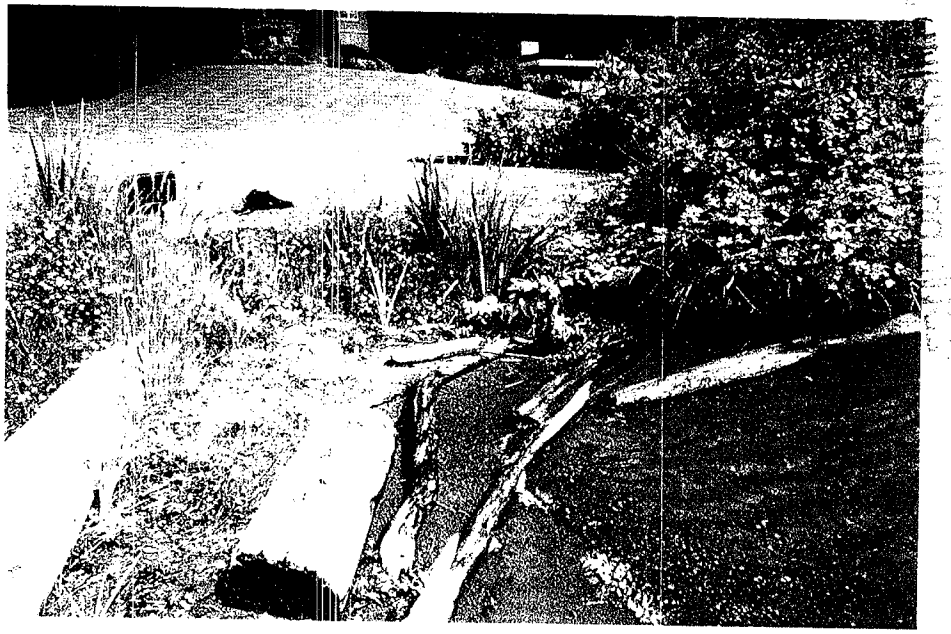

View of existing cove area looking southeast that will be planted with native riparian and emergent vegetation.

Part 4–Property Owner(s) [help]

Contact information for people or organizations owning the property(ies) where the project will occur. [help]

☒ Same as applicant. (Skip to Part 5.)

☐ Repair or maintenance activities on existing rights-of-way or easements. (Skip to Part 5.)

☐ There are multiple property owners. Complete the section below and use JARPA Attachment A for each additional property owner.

4a. Name (Last, First, Middle) and Organization (if applicable)			
4b. Mailing Address (Street or PO Box)			
4c. City, State, Zip			
4d. Phone (1)	**4e.** Phone (2)	**4f.** Fax	**4g.** E-mail
( )	( )	( )	

Part 5–Project Location(s)

Identifying information about the property or properties where the project will occur. [help]

☐ There are multiple properties or project locations (e.g., linear projects). Complete the section below and use JARPA Attachment B for each additional property.

5a. Street Address (Cannot be a PO Box. If there is no address, provide other location information in 5n.) [help]

2009 101st Ave SE (Killarney Way)

5b. City, State, Zip (If the project is not in a city or town, provide the name of the nearest city or town.) [help]

Bellevue, WA 98004

5c. County [help]

King

5d. Provide the section, township, and range for the project location. [help]

¼ Section	Section	Township	Range
SE	06	24N	05E

5e. Provide the latitude and longitude of the project location. [help]

- Example: 47.03922 N lat. / -122.89142 W long.

Latitude: 47.592475N Longitude: -122.209189W

5f. List the tax parcel number(s) for the project location. [help]

- The local county assessor's office can provide this information.

062405 9077

5g. Indicate the type of ownership of the property. (Check all that apply.) [help]

☐ State Owned Aquatic Land ☐ Tribal ☒ Private

☐ Other publicly owned (federal, state, county, city, special districts like schools, ports, etc.)

5h. Contact information for all adjo... ...g property owners, lessees, etc. (If yo... ...ed more space, use JARPA Attachment C.) [help]

Name	Mailing Address	Tax Parcel # (if known)
Enatai LLC	2011 100th Ave SE Bellevue, WA 98004	062405 9038
Terence & Ann Lukens	2015 Killarney Way Bellevue, WA 98004	062405 9066

5i. Is any part of the project area within a 100-year flood plain? [help]

☐ Yes ☒ No ☐ Don't know

5j. Briefly describe the vegetation and habitat conditions on the property. [help]

There is small rock bulkhead along the shoreline at and behind the OHWL of Lake Washington. The shoreline currently has non-native vegetation that will be removed and replaced with a native riparian planting plan. The substrate consists of sand and small cobble.

5k. Describe how the property is currently used. [help]

The property is single family residential.

5l. Describe how the adjacent properties are currently used. [help]

The adjacent properties are single family residential.

5m. Describe the structures (above and below ground) on the property, including their purpose(s). [help]

Structures on site include 4,800 s/f residence and a small rock bulkhead along the shoreline at and behind the OHWL of Lake Washington.

5n. Provide driving directions from the closest highway to the project location, and attach a map. [help]

From I-405 South take exit 13B, and merge onto NE 8th St, turn left at Bellevue Way NE, turn right at SE 3rd St, turn left onto 101st Ave SE, arrive at 2009 101st Ave SE (Killarney Way) on the left.

Part 6–Project Description

6a. Summarize the overall project. You can provide more detail in 6d. [help]

- Construct a fully grated 312s/f pier consisting of a 4' wide x 78' long main walkway with 4' x 74' (296s/f) waterward of the OHWL.
- The pier will be supported by (2) 4" diameter (upland) and (2) 4" and (4) 6" diameter (inwater) steel piles. The most waterward pile set will be battered.
- Install (1) freestanding boatlift and (1) portable jet-ski lift.
- Install a native riparian planting plan.

6b. Indicate the project category. (Check all that apply.) [help]

☐ Commercial ☒ Residential ☐ Institutional ☐ Transportation ☐ Recreational
☐ Maintenance ☐ Environmental Enhancement

6c. Indicate the major elements of your project. (Check all that apply.) [help]

☐ Aquaculture	☐ Culvert	☐ Float	☐ Road
☐ Bank Stabilization	☐ Dam / Weir	☐ Geotechnical Survey	☐ Scientific Measurement Device
☐ Boat House	☐ Dike / Levee / Jetty	☐ Land Clearing	☐ Stairs
☐ Boat Launch	☐ Ditch	☐ Marina / Moorage	☐ Stormwater facility
☒ Boat Lift	☒ Dock / Pier	☐ Mining	☐ Swimming Pool
☐ Bridge	☐ Dredging	☐ Outfall Structure	☐ Utility Line
☐ Bulkhead	☐ Fence	☒ Piling	
☐ Buoy	☐ Ferry Terminal	☐ Retaining Wall (upland)	
☐ Channel Modification	☐ Fishway		

☐ Other: _____

6d. Describe how you plan to construct each project element checked in 6c. Include specific construction methods and equipment to be used. [help]

- Identify where each element will occur in relation to the nearest waterbody.
- Indicate which activities are within the 100-year flood plain.

1. Mobilize construction barge to the site with all construction materials and equipment onboard. Moor the barge as to prevent grounding on the lake bottom at any time during construction.
2. Install silt containment curtain around work area to contain any debris that may fall into lake waters. In the event any materials enter lake waters they will be retrieved immediately and placed in debris containers on the barge.
3. Using the barge-based crane and vibratory insertion/extraction system, install (2) 4" diameter (upland) steel piles and (2) 4" diameter and (4) 6" diameter (inwater) steel piles to practical refusal. The most waterward set of piles will be battered to provide additional lateral strength. If required, proof piles using a drop hammer pile driver with a 6" minimum block of wood between pile driver and pile.
4. Cut steel piling as necessary at the appropriate elevation and attach pipe collar assemblies.
5. Install pre-fabricated pier onto pipe collar assemblies and secure to piling.
6. Install (1) freestanding boatlift.
7. Install (1) portable jet-ski lift.
8. Remove silt containment curtain.
9. Demobilize and dispose of all debris at approved upland disposal site.

6e. What are the start and end dates for project construction? (month/year) [help]

- If the project will be constructed in phases or stages, use JARPA Attachment D to list the start and end dates of each phase or stage.

Start date: _____ End date: _____ ☐ See JARPA Attachment D

The project will not be constructed in stages. Work will be completed during authorized state and federal work windows designed to protect listed species at this location on Lake Washington.

6f. Describe the purpose of the work and why you want or need to perform it. [help]

The purpose of the project is to provide safe and adequate moorage for the property owners. The design was influenced by environmental considerations, conservation and impact minimization measures known to have the least impact on listed species and critical habitat.

6g. Fair market value of the project, including materials, labor, machine rentals, etc. [help]

$38,000.00 (estimate)

6h. Will any portion of the project receive federal funding? [help]

- **If yes**, list each agency providing funds.

☐ Yes ☒ No ☐ Don't know

Part 7–Wetlands: Impacts and Mitigation

☐ Check here if there are wetlands or wetland buffers on or adjacent to the project area. (If there are none, skip to Part 8.)

7a. Describe how the project has been designed to avoid and minimize adverse impacts to wetlands. [help]

☐ Not applicable

7b. Will the project impact wetlands? [help]

☐ Yes ☐ No ☐ Don't know

7c. Will the project impact wetland buffers? [help]

☐ Yes ☐ No ☐ Don't know

7d. Has a wetland delineation report been prepared? [help]

- **If yes**, submit the report, including data sheets, with the JARPA package.

☐ Yes ☐ No

7e. Have the wetlands been rated using the Western Washington or Eastern Washington Wetland Rating System? [help]

- **If yes**, submit the wetland rating forms and figures with the JARPA package.

☐ Yes ☐ No ☐ Don't know

7f. Have you prepared a mitigation plan to compensate for any adverse impacts to wetlands? [help]

- **If yes**, submit the plan with the JARPA package.

☐ Yes ☐ No ☐ Not applicable

7g. Use the table below to list the type and rating of each wetland that will be impacted; the extent and duration of the impact; and the type and amount of compensatory mitigation proposed. If you are submitting a compensatory mitigation plan with a similar table, you may simply state (below) where we can find this information in the mitigation plan. [help]

Activity causing impact (fill, drain, excavate, flood, etc.)	Wetland type and rating category[1]	Impact area (sq. ft. or acres)	Duration of impact[2]	Proposed mitigation type[3]	Wetland mitigation area (sq. ft. or acres)

[1] Ecology wetland category based on current Western Washington or Eastern Washington Wetland Rating System. Provide the wetland rating forms with the JARPA package.

[2] Indicate the time (in months or years, as appropriate) the wetland will be measurably impacted by the activity. Enter "permanent" if applicable.

[3] Creation (C), Re-establishment/Rehabilitation (R), Enhancement (E), Preservation (P), Mitigation Bank/In-lieu fee (B)

Page number(s) for similar information in the mitigation plan, if available: _____

7h. For all filling activities identified in 7g., describe the source and nature of the fill material, the amount in cubic yards that will be used, and how and where it will be placed into the wetland. [help]

7i. For all excavating activities identified in 7g., describe the excavation method, type and amount of material in cubic yards you will remove, and where the material will be disposed. [help]

7j. Summarize what the compensatory mitigation plan is meant to accomplish, and describe how a watershed approach was used to design the plan. [help]

Part 8–Waterbodies (other than wetlands): Impacts and Mitigation

In Part 8, "waterbodies" refers to non-wetland waterbodies. (See Part 7 for information related to wetlands.) [help]

☒ Check here if there are waterbodies on or adjacent to the project area. (If there are none, skip to Part 9.)

8a. Describe how the project is designed to avoid and minimize adverse impacts to the aquatic environment. [help]

☐ Not applicable

1. The dock will have a fully grated surface with 46% open area to allow light transmission to reach the lake waters below greatly reducing the effective overwater coverage.
2. The bottom of the dock will be 18" above and the dock surface 30" above the OHWL to allow light beneath.
3. Only 296 s/f of the pier is waterward of the OHWL, much less than the 480s/f allowed by the Corps RGP-3.
4. No portion of the pier is wider than 4' and there are no finger piers or ells associated with the project.
5. The smallest number and diameter steel piles will be used to minimize the amount of structure in the water and disturbance to the substrate.
6. Glu-lam stringers will be used to allow the longest spans possible between piles.
7. The construction barge will not be allowed to ground out on the lake bottom at anytime.
8. A vibratory pile driver will be used. If a drop hammer is required by the local government for proofing of piles, sound attenuation measures recommended by NOAA-Fisheries and U. S. Fish and Wildlife will be implemented including a minimum 6" block of wood between pile and driver.
9. Construction will take place during authorized state and federal work windows designed to protect listed species at this location on Lake Washington.
10. Dock sections, boatlift and jet-ski lift will be prefabricated at the contractor's Lake Union facility and delivered via construction barge greatly limiting construction time at the site.
11. Existing non native vegetation will be removed and a planting plan of native vegetation will be installed.

8b. Will your project impact a waterbody or the area around a waterbody? [help]

☒ Yes ☐ No

8c. Summarize impact(s) to each waterbody in the table below. [help]

Activity causing impact (clear, dredge, fill, pile drive, etc.)	Waterbody name	Impact location[1]	Duration of impact[2]	Amount of material to be placed in or removed from waterbody	Area (sq. ft. or linear ft.) of waterbody directly affected
Pile Driving	Lake Washington	In	1-2 Days	(2) 4" and (4) 6" Piles	<3s/f
Pier, Boatlift and Jet-Ski Lift	Lake Washington	In	Permanent	296s/f	296s/f

[1] Indicate whether the impact will occur in or adjacent to the waterbody. If adjacent, provide the distance between the impact and the waterbody and indicate whether the impact will occur within the 100-year flood plain.

[2] Indicate the time (in months or years, as appropriate) the waterbody will be measurably impacted by the work. Enter "permanent" if applicable.

8d. Have you prepared a mitigation plan to compensate for the project's adverse impacts to non-wetland waterbodies? [help]

- **If yes**, submit the plan with the JARPA package.

☐ Yes ☐ No ☒ Not applicable

8e. Summarize what the compensa mitigation plan is meant to accompli Describe how a watershed approach was used to design the plan.

- If you already completed 7j., you do not need to restate your answer here. [help]

N/A

8f. For all activities identified in 8c., describe the source and nature of the fill material, amount (in cubic yards) you will use, and how and where it will be placed into the waterbody. [help]

N/A

8g. For all excavating or dredging activities identified in 8c., describe the method for excavating or dredging, type and amount of material you will remove, and where the material will be disposed. [help]

N/A

Part 9–Additional Information

Any additional information you can provide helps the reviewer(s) understand your project.

9a. If you have already worked with any government agencies on this project, list them below. [help]

Agency Name	Contact Name	Phone	Most Recent Date of Contact
		( )	
		( )	
		( )	

9b. Are any of the wetlands or waterbodies identified in Part 7 or Part 8 on the Washington Department of Ecology's 303(d) List? [help]

- If yes, list the parameter(s) below.
- If you don't know, use Washington Department of Ecology's Water Quality Assessment tools at: http://www.ecy.wa.gov/programs/wq/303d/.

☒ Yes ☐ No

DOE website query did not return any parameters for this Section, Township and Range of Lake Washington.

9c. What U.S. Geological Survey Hydrological Unit Code (HUC) is the project in? [help]

- Go to http://cfpub.epa.gov/surf/locate/index.cfm to help identify the HUC.

17110112

9d. What Water Resource Inventory Area Number (WRIA #) is the project in? [help]

- Go to http://www.ecy.wa.gov/services/gis/maps/wria/wria.htm to find the WRIA #.

8

9e. Will the in-water construction work comply with the State of Washington water quality standards for turbidity? [help]

- Go to http://www.ecy.wa.gov/programs/wq/swqs/criteria.html for the standards.

☒ Yes ☐ No ☐ Not applicable

9f. If the project is within the jurisdiction of the Shoreline Management Act, what is the local shoreline environment designation? [help]

- If you don't know, contact the local planning department.
- For more information, go to: http://www.ecy.wa.gov/programs/sea/sma/laws_rules/173-26/211_designations.html.

☐ Rural ☐ Urban ☐ Natural ☐ Aquatic ☐ Conservancy ☒ Other Residential

9g. What is the Washington Department of Natural Resources Water Type? [help]

- Go to http://www.dnr.wa.gov/BusinessPermits/Topics/ForestPracticesApplications/Pages/fp_watertyping.aspx for the Forest Practices Water Typing System.

☐ S ☒ F ☐ Np ☐ Ns

9h. Will this project be designed to meet the Washington Department of Ecology's most current stormwater manual? [help]

- **If no**, provide the name of the manual your project is designed to meet.

☐ Yes ☐ No ☒ Not Applicable

Name of manual:

9i. If you know what the property was used for in the past, describe below. [help]

It is unknown if the property has ever been other than residential.

9j. Has a cultural resource (archaeological) survey been performed on the project area? [help]

- **If yes**, attach it to your JARPA package.

☐ Yes ☒ No

9k. Name each species listed under the federal Endangered Species Act that occurs in the vicinity of the project area or might be affected by the proposed work. [help]

Chinook Salmon (Oncorhynchus tshawytscha), Coho Salmon (Oncorhynchus kisutch), Bull Trout (Salvelinus confluentus), and Puget Sound Steelhead (Oncorhynchus mykiss)

9l. Name each species or habitat on the Washington Department of Fish and Wildlife's Priority Habitats and Species List that might be affected by the proposed work. [help]

None.

Part 10–Identify the Permits You Are Applying For

Use the resources and checklist below to identify the permits you are applying for.

- Online Project Questionnaire at http://apps.ecy.wa.gov/opas/.
- Governor's Office of Regulatory Assistance at (800) 917-0043 or help@ora.wa.gov.

10a. Compliance with the State Environmental Policy Act (SEPA). (Check all that apply.) [help]

- For more information about SEPA, go to www.ecy.wa.gov/programs/sea/sepa/e-review.html.

☐ A copy of the SEPA determination or letter of exemption is included with this application.

☒ A SEPA determination is pending with City of Bellevue (lead agency). The expected decision date is Unknown.

☐ I am applying for a Fish Habitat Enhancement Exemption. (Check the box below in 10b.)

- Submit the Fish Habitat Enhancement Project form with this application. The form can be found at http://www.epermitting.wa.gov/Portals/_JarpaResourceCenter/images/default/fishenhancement.doc

☐ This project is exempt (choose one of exemption below).

☐ Categorical Exemption. Under what section of the SEPA administrative code (WAC) is it exempt?

_____

☐ Other: _____

☐ SEPA is pre-empted by federal law. [help]

10b. Indicate the permits you are applying for. (Check all that apply.) [help]

LOCAL GOVERNMENT

Local Government Shoreline permits:

☒ Substantial Development ☐ Conditional Use ☐ Variance

☐ Shoreline Exemption Type (explain): _____

Other city/county permits:

☐ Floodplain Development Permit ☐ Critical Areas Ordinance

STATE GOVERNMENT

Washington Department of Fish and Wildlife:

☒ Hydraulic Project Approval (HPA) ☐ Fish Habitat Enhancement Exemption

Washington Department of Ecology:

☒ Section 401 Water Quality Certification

Washington Department of Natural Resources:

☐ Aquatic Resources Use Authorization

FEDERAL GOVERNMENT

United States Department of the Army permits (U.S. Army Corps of Engineers):

☐ Section 404 (discharges into waters of the U.S.) ☒ Section 10 (work in navigable waters)

United States Coast Guard permits:

☐ General Bridge Act Permit ☐ Private Aids to Navigation (for non-bridge projects)

Part 11–Authorizing Signatures

Signatures required before submitting the JARPA package.

11a. Applicant Signature (required) [help]

I certify that to the best of my knowledge and belief, the information provided in this application is true, complete, and accurate. I also certify that I have the authority to carry out the proposed activities, and I agree to start work only after I have received all necessary permits.

I hereby authorize the agent named in Part 3 of this application to act on my behalf in matters related to this application. JC (initial)

By initialing here, I state that I have the authority to grant access to the property. I also give my consent to the permitting agencies entering the property where the project is located to inspect the project site or any work related to the project. JC (initial)

Luis F. Cabrera
Applicant (Luis Cabrera)

August 7, 2009
Date

11b. Authorized Agent Signature [help]

I certify that to the best of my knowledge and belief, the information provided in this application is true, complete, and accurate. I also certify that I have the authority to carry out the proposed activities and I agree to start work only after all necessary permits have been issued.

Authorized Agent (David Douglas/Waterfront Construction, Inc.)

9-8-09
Date

11c. Property Owner Signature (if not applicant) [help]

I consent to the permitting agencies entering the property where the project is located to inspect the project site or any work. These inspections shall occur at reasonable times and, if practical, with prior notice to the landowner.

Luis F. Cabrera
Property Owner (Luis Cabrera)

August 7, 2009
Date

18 U.S.C §1001 provides that: Whoever, in any manner within the jurisdiction of any department or agency of the United States knowingly falsifies, conceals, or covers up by any trick, scheme, or device a material fact or makes any false, fictitious, or fraudulent statements or representations or makes or uses any false writing or document knowing same to contain any false, fictitious, or fraudulent statement or entry, shall be fined not more than $10,000 or imprisoned not more than 5 years or both.

If you require this document in another format, contact The Governor's Office of Regulatory Assistance (ORA). People with hearing loss can call 711 for Washington Relay Service. People with a speech disability can call (877) 833-6341.
ORA publication number: ENV-019-09