City of Bellevue
Development Services Department
Land Use Staff Report

Proposal Name:	Newcastle Beach Park Irrigation Pump Station
Proposal Address:	4400 Lake Washington Boulevard SE
Proposal Description:	The applicant is requesting a combined shoreline substantial development permit and critical areas land use permit for the construction of a new irrigation pump facility on 4-foot by 5-foot concrete pad and three underground water lines from the new pump extending below the existing pier to the water.
File Number:	08-134669-WG
Applicant:	Rick Bailey, City of Bellevue, Parks & Community Services Department
Decisions Included:	Shoreline Substantial Development Permit Critical Areas Land Use Permit (Process II. LUC 20.30R and 20.30P)
Planner:	Kevin LeClair , Planner
State Environmental Policy Act Threshold Determination:	**Determination of Non-Significance** Carol V. Helland, Environmental Coordinator Development Services Department
Director's Decision:	**Approval with Conditions** Michael A. Brennan, Director Development Services Department By: _____ Carol V. Helland, Land Use Director

Application Date:	November 26, 2008
Notice of Application Publication Date:	January 8, 2009
Decision Publication Date:	March 12, 2009
Project/SEPA Appeal Deadline:	March 26, 2009

For information on how to appeal a proposal, visit Development Services Center at City Hall or call (425) 452-6800. Comments on State Environmental Policy Act (SEPA) Determinations can be made with or without appealing the proposal within the noted comment period for a SEPA Determination. Appeal of the Decision must be received in the City's Clerk's Office by 5 PM on the date noted for appeal of the decision.

City of Bellevue
Development Services Department
P.O. Box 90012, Bellevue, WA 98009-9012
(425) 452-6800 Fax (425) 452-5225

Shoreline Management Act of 1971
Permit for Shoreline Management Substantial Development
Conditional Use and/or Variance

Application No. 08-134669-WG

Date Received 11/26/2008

[X] Approved / Date 03/12/2009
[ ] Denied / Date

Type of Action:

[X] Substantial Development Permit
[ ] Conditional Use Permit
[ ] Variance Permit

Pursuant to Chapter 90.58 RCW, a permit is hereby granted to: Rick Bailey, City of Bellevue, Parks and Community Services Department

To undertake the following development:
A combined shoreline substantial development permit and critical areas land use permit for the construction of a new irrigation pump facility on 4-foot by 5-foot concrete pad approximately 50 feet landward of the ordinary high water mark and three underground water lines from the new pump extending below the existing pier to the water.

Upon the following property: Newcastle Beach Park, 4400 Lake Washington Boulevard SE, Bellevue WA

adjacent to Lake Washington
and/or its associated wetlands. The project will be located adjacent to Shorelines of Statewide Significance (RCW 90.58.030). The project will be located within a Shoreline Overlay District designation. The following master program provisions are applicable to this development:

- Land Use Code(LUC) Section 20.25E.080(B)General Regulations Applicable to all Land Use Districts & Activities
- LUC Section 20.30R Shoreline Substantial Development Permit
- Bellevue Comprehensive Plan, Shoreline Management Program Element, Policy SH-1

Development pursuant to this permit shall be undertaken in accordance with the following terms and conditions:

Conditions of Approval:
The following conditions are imposed under the Bellevue City Code or SEPA authority referenced:

1. Restoration for Areas of Temporary Disturbance: A restoration plan for all areas of temporary disturbance is required to be submitted for review and approval by the City of Bellevue prior to the issuance of the subsequent Building or Clearing and Grading Permit. The plan shall include the documentation of existing site conditions and shall identify the restoration measures to return the site to it's existing conditions per LUC 20.25H.220.H.

Authority: Land Use Code 20.25H.220.H
Reviewer: Kevin LeClair, Land Use

2. Rainy Season restrictions: Due to the proximity to Lake Washington, no clearing and grading activity may occur during the rainy season, which is defined as November 1 through April 30 without written authorization of the Department of Planning and Community Development. Should approval be granted for work during the rainy season , increased erosion and sedimentation measures, representing the best available technology must be implemented prior to beginning or resuming site work.

Authority: Bellevue City Code 23.76.093.A,
Reviewer: Tom McFarlane, Development Services Department

3. Noise Control: The proposal will be subject to normal construction hours of 7 am to 6 pm Monday through Friday and 9 am to 6 pm on Saturdays, except for Federal holidays and as further defined by the Bellevue City Code. Upon written request to PCD, work hours may be extended to 10 pm if the criteria for extension of work hours as stated in BCC 9.18 can be met.

Authority: Bellevue City Code 9.18
Reviewer: Kevin LeClair, Land Use Division

4. Other State and Federal Permits: The applicant must demonstrate to the City of Bellevue that all applicable state and federal permits have been obtained prior to being allowed commence work under the City of Bellevue Clearing and Grading Permits. A Hydraulic Project Approval (HPA) permit shall be obtained from the Washington Department of Fish and Wildlife. The United States Army Corps of Engineers (USACE) shall be consulted to determine if any Federal Permits are required.

Authority: Land Use Code 20.30P.140.A
Reviewer: Kevin LeClair, Land Use

5. Other City of Bellevue Permits: The applicant has applied for a Clearing and Grading Permit in conjunction with the application for the Shoreline Substantial Development Permit and Critical Areas Land Use Permit. This Clearing and Grading Permit must be obtained and the necessary inspections conducted prior to commencement of construction activity associated with this approval.

Authority: Land Use Code 20.30P.140.A
Reviewer: Kevin LeClair, Land Use

This permit is granted pursuant to the Shoreline Management Act of 1971 and nothing in this permit shall excuse the applicant from compliance with any other federal, state or local statutes, ordinances or regulations applicable to this project, but not inconsistent with the Shoreline Management Act (Chapter 90.58 RCW).

This permit may be rescinded pursuant to RCW 90.58.140(8) in the event the permittee fails to comply with the terms and conditions hereof.

Construction pursuant to this permit, or substantial progress toward construction, must be undertaken within two years of the date of final approval. This permit shall expire five years from the date of local approval.

Construction pursuant to this permit will not begin or is not authorized until twenty-one (21) days from the date of filing, as defined in RCW 90.58.140(6) and WAC 173-27-130, or until all review proceedings initiated within twenty-one (21) days from the date of such filing have terminated; except as provided in RCW 90.58.140(5) (A) (B) (C).

March 12, 2006

Date

City of Bellevue, Land Use Division

CC: Attorney General, Department of Ecology, Northwest Region
Dept. of Fish and Wildlife, Attn: Alisa Bieber, 3190 160th Avenue SE, Bellevue, WA 98008-5452
Dept. of Ecology, Attn: Dave Radabaugh, 3190 160th Avenue SE, Bellevue, WA 98008-5452

CONTENTS

I. Proposal Description ..... Pg 4

II. Site Description, Zoning & Land Use Context ..... Pg 4

III. Consistency with Land Use Code Requirements ..... Pg 5

IV. Public Notice & Comment ..... Pg 8

V. Technical Review ..... Pg 8

VI. State Environmental Policy Act (SEPA) ..... Pg 8

VII. Changes to Proposal Due to Staff Review ..... Pg 8

VIII. Decision Criteria ..... Pg 9

IX. Decision ..... Pg 10

X. Conditions of Approval ..... Pg 11

I. Proposal Description

The applicant is requesting a combined shoreline substantial development permit and critical areas land use permit for the construction of a new irrigation pump facility on 4-foot by 5-foot concrete pad and three underground water lines from the new pump extending below the existing pier to the water.

Land Use Code (LUC) 20.25E designates the first 200 feet landward from the ordinary high water mark (OHWM) from Lake Washington as under the jurisdiction of the Shoreline Overlay District. Furthermore, LUC 20.25H prescribes a critical area buffer to the first 25 feet landward of the OHWM and a critical area structure setback on the next 25 feet landward beyond the critical area buffer.

A substantial development permit is required for all development within the Shoreline Overlay District per LUC 20.25E.040. A Critical Areas Land Use Permit is required if a proposal involves disturbance to the critical area buffer and critical area structure setback per LUC 20.25H.015.B.

The proposed irrigation pump facility and associated water lines are considered an essential public facility for the purposes of review under the Shoreline Substantial Development Permit and Critical Areas Land Use Permit. The proposal will be reviewed for compliance with applicable decision criteria and performance standards for these permits.

II. Site Description, Zoning, Land Use and Critical Areas

A. Site Description

The project is located at Newcastle Beach Park (Park) located at 4400 Lake Washington Boulevard SE. Newcastle Beach Park is approximately 42 acres in size, including the associated second class shorelands in Lake Washington. The park site includes both developed and natural features. The developed portion of park site covers approximately 8.5 acres and includes a 300-foot dock, swimming beach with lifeguard station, a children's play area, picnic facilities and paved parking for approximately 76 cars. There is also a gravel, overflow parking area for another 40 cars. There is also a private, caretaker's residence within the developed portion of the park. The other 33.5 acres of the site are in natural condition and contain forested, shoreline wetlands, and upland deciduous forest. The forests consists mostly of mature cottonwood trees and typical understory plants with a mixture of native and exotic species. There is a 1,700-foot soft-surface, nature trail loop in the shoreline wetland area. The Park is one of Bellevue Parks and Community Services Department's most popular destinations during the summer months.

B. Zoning

The property is zoned R-2.5. The property is also under the jurisdiction of both the Shoreline Overlay District and the Critical Areas Overlay District.

C. Land Use Context

The Park is bounded by single-family residential development on both the north and south. The residential development to the north is buffered by an approximate 100-foot wide strip of significant trees and vegetation. The residential development to the south is buffered from the Park by the shoreline wetlands and is approximately 750 feet from the nearest developed portion of the Park. The Park is border on the east by the limited access right-of-way of Interstate-405. Lake Washington is on the west side of the Park.

D. Critical Areas Functions and Values

1. Shorelines

Shorelines provide a variety of functions including shade, temperature control, water purification, woody debris recruitment, channel, bank and beach erosion, sediment delivery, and terrestrial-based food supply (Gregory et al. 1991; Naiman et al. 1993; Spence et al.1996).

Shorelines provide a wide variety of functions related to aquatic and riparian habitat, flood control and water quality, economic resources, and recreation, among others. Each function is a product of physical, chemical, and biological processes at work within the overall landscape. In lakes, these processes take place within an integrated system (ecosystem) of coupled aquatic and riparian habitats (Schindler and Scheuerell 2002). Hence, it is important to have an ecosystem approach which incorporates an understanding of shoreline functions and values.

The proposal is seeking to install a water intake and conduit to house an irrigation water withdrawal line on the underside of the existing dock structure. This line will be then connected to pump facility via an underground conduit.

The proposed new facility is not believed to have any significant impact on the current shoreline functions and values at the Park.

III. Consistency with Land Use Code Requirements:

A. Zoning District Dimensional Requirements:

The site is located in the R-2.5 land use zoning district. The park use is a conditional use at the site. The proposed facility has no impact on this conditional use. The general dimensional standards for the land use zoning district are not applicable to this proposal.

B. Critical Areas Requirements LUC 20.25H:

1. Analysis of Technical Feasibility for New or Expanded Allowed Uses LUC 20.25H.055.C.2.a

New or expanded facilities and systems are allowed in the critical area and critical area buffer only where no technically feasible alternative exists. The applicant performed an analysis of other alternatives and determined that no

technically feasible alternative exists. The analysis found that there is no other location or configuration that would satisfy the project's goal, based on the primary intent of the proposal to withdraw water from Lake Washington for use as irrigation water for the developed turf and landscape areas at the Park. Additionally, the design of the associated infrastructure has been designed and located in a manner to minimize impacts to the critical area and critical area buffer. For example, all of the PVC conduits and electrical wiring will be placed under ground and the temporary disturbance restored. The electronic controls are to be co-located with the existing irrigation controls in the mechanical room in the bath house. The actual pump house is being located over 50 feet landward of the OHWM in order to be outside of the critical area buffer and critical area structure setback.

2. Consistency with Performance Standards for Specific Uses or Development LUC 20.25H.055.C.2.b.

As stated above, there are no serviceable alternative locations for the project to be completed. No long term impacts and minimal short term impacts are anticipated as a result of the project. No impacts to salmonid habitat or species of local importance habitat are anticipated and no wetland or stream crossings are proposed. All work would be conducted consistent with applicable City codes and standards.

Short term project impacts would be limited to activities associated with trenching to install the water lines and electrical pump control lines and the installation of the 4 by 5-foot concrete pad (see "limit of work" area shown on plan sheet I-1.0). The project work area is anticipated to be approximately 2,640 square feet with all trenching work anticipated to be complete within 5 days of initiation (including stabilization of exposed soils). Best Management Practices (BMPs) such as silt fencing of the entire limit of work area would be employed if necessary during construction. No impact to the water is anticipated as a result of the project, including the installation of the irrigation line below the pier, and no long term impacts are anticipated to occur on land or within the water.

3. Consistency With Land Use Code Critical Areas Shoreline Performance Standards 20.25E.080.B:

i. *Where applicable, all federal and state water quality and effluent standards shall be met.*

The project will be constructed and operated consistent with applicable federal state and local regulations regarding water quality and effluent standards.

ii. *If a property extends into the Shoreline Overlay District, the Shoreline Master Program Policies and these use regulations shall apply only to that portion of the property lying within the Shoreline Overlay District.*

The project would take place within the shoreline overlay district. Accordingly, the project will be constructed and operated consistent with applicable shoreline overlay district standards.

iii. *All development within the Shoreline Overlay District shall be accompanied*

by a plan indicating methods of preserving shoreline vegetation and for control of erosion during and following construction in accordance with Part 20.25H LUC, City of Bellevue Clearing and Grading regulations, Chapter 23.76 BCC, and the Comprehensive Plan.

This shoreline permit narrative and the project plans included in the application package identify BMPs and other measures that will be employed to preserve and protect shoreline vegetation and prevent erosion consistent with applicable local, state and federal regulations. As stated above, the project is anticipated to entail the disturbance of approximately 2,640 sf of earth, associated with trenching necessary for the project. The trenching and any exposed soils are anticipated to be restored with sod within 5 days of project initiation. BMPs such as silt fencing and straw wattles would be employed as necessary.

iv. *Special care shall be exercised to preserve vegetation in wetland, shoreline and stream corridor bank areas in order to prevent soil erosion. Removal of vegetation from or disturbance of shoreline critical areas and shoreline critical area buffers, and from other critical area and critical area buffers shall be prohibited, except in conformance with Part 20.25H LUC and the specific performance standards of this section.*

The only vegetation that will be disturbed by the completion of the project are maintained lawn areas that will be temporary disturbed during the trenching process.

v. *Maximum height limitation for any proposed structure within the Shoreline Overlay District shall be 35 feet, except in land use districts with more restrictive height limitations. The method of measuring the maximum height is described in WAC 173-14-030(6). Variances to this height limitation may be granted pursuant to Part 20.30H LUC.*

The only structure proposed that would be visible to the casual observer would be the “Floboy” pump facility which would be housed in a sheet metal box of no more than approximately 3 feet in height and appearing much like the utility box that already exists to the north of the proposed pump facility location.

vi. *The Bellevue Shoreline Master Program, in conjunction with existing Bellevue land use ordinances and Comprehensive Plan policies, shall guide all land use decisions in the Shoreline Overlay District.*

The project will be constructed and operated consistent with applicable local, state and federal regulations.

vii. *Any development within the Shoreline Overlay District shall comply with all applicable Bellevue ordinances, including but not limited to the Bellevue Land Use Code, Sign Code, and clearing and grading regulations.*

The project will be constructed and operated consistent with applicable local, state and federal regulations.

viii. *The dead storage of watercraft seaward of the ordinary high water mark of the shoreline is prohibited.*

The project includes no provisions regarding the storage of watercraft, therefore, this standard does not apply.

ix. *Where applicable, state and federal standards for the use of herbicides,*

pesticides and/or fertilizers shall be met, unless superseded by City of Bellevue ordinances. Use of such substances in the shoreline critical area and shoreline critical area buffer shall comply with the City's "Environmental Best Management Practices."

The project is not anticipated to include the use of herbicides or pesticides. There is a possibility that a small amount of fertilizer would be used in the restoration of the approximately 2,640 sf of area anticipated to be disturbed as a result of the installation of the pump station and related system components. The use of any such substances would be consistent with applicable local, state and federal regulations.

x. *Adequate storm drainage and sewer facilities must be operational prior to construction of new development within the Shoreline Overlay District. Storm drainage facilities shall be separated from sewage disposal systems.*

The project will not involve the use of storm drainage or sewer facilities, therefore, this standard does not apply.

IV. Public Notice and Comment

Application Date:	November 26, 2008
Public Notice (500 feet):	January 8, 2009
Minimum Comment Period:	February 9, 2009

The Notice of Application for this project was published in the City of Bellevue weekly permit bulletin on January 8, 2009. The permit bulletin was mailed to property owners within 500 feet of the project site. No comments have been received from the public as of the writing of this staff report.

One question was received from a neighboring property owner. When the scope of the project was described to the property owner, he had no further comments or questions.

V. Summary of Technical Reviews

Clearing and Grading:

The Clearing and Grading Division of the Planning and Community Development Department has reviewed the proposed site development for compliance with Clearing and Grading codes and standards. The Clearing and Grading staff found no issues with the proposed development.

VI. State Environmental Policy Act (SEPA)

The environmental review indicates the project is exempt from SEPA review due to the size of the water right claimed for Newcastle Beach Park (less than 1 cubic foot per second) and the provisions of WAC 197-11-800 (4). Furthermore, the SEPA exemption covers any additional shoreline, fisheries or building permits that may result from the project.

VII. Changes to proposal as a result of City review

No changes were made to the proposal as a result of City review.

VIII. Decision Criteria

A. Shoreline Substantial Development Permit Decision Criteria LUC 20.30R

1. The applicant has carried the burden of proof and produced evidence sufficient to support the conclusion that the application merits approval or approval with modifications; and

Finding: The applicant has provided a high level of documentation that demonstrates that the proposal merits approval. They have demonstrated that there is no technically feasible alternative to the propose location of the improvements. The design of the proposal minimized disturbance in the shoreline overlay district and any temporary impacts are proposed to be completely restored.

2. The applicant has demonstrated that the proposal complies with the applicable decision criteria of the Bellevue City Code; and

Finding: The applicant has demonstrated, through both narrative and illustrations, that the proposal is compliant with the applicable decision criteria and performance standards for a Shoreline Substantial Development Permit and Critical Areas Land Use Permit.

3. The applicant has demonstrated that the proposal is consistent with the policies and procedures of the Shoreline Management Act and the provisions of Chapter 173-14 WAC and the Master Program.

Finding: The applicant has thoroughly demonstrated that the proposal is consistent with the policies and procedures of the Shoreline Management Act and the City of Bellevue's Shoreline Master Program. This was done in narrative format in which the applicable policies were cited and a brief explanation was provided explaining how the proposal is consistent. See attachments for narrative.

B. Critical Areas Land Use Permit Decision Criteria LUC 20.30P

The proposal, as conditioned below, meets the applicable regulations and decision criteria for a Critical Areas Land Use Permit pursuant to LUC Section 20.30P.

1. The proposal obtains all other permits required by the Land Use Code;

Finding: The proposal is required to obtain a clearing and grading permit for the earth movement as well as plumbing and electrical permits for those components of the proposal.

2. The proposal utilizes to the maximum extent possible the best available construction, design and development techniques which result in the least impact on the critical area and critical area buffer;

Finding: The proposal has sought to minimize impacts to the critical area and critical area buffer to maximum extent possible. It has done this by locating the new

facilities on either the underside of the existing dock structure, under ground or outside of the critical area buffer and critical area structure setback. The proposal also includes a plan for restoration of all areas of temporary disturbance.

3. The proposal incorporates the performance standards of Part 20.25H to the maximum extent applicable, and ;

Finding: As discussed above in Section III, the proposals has incorporate or address the performance standards to the greatest extent possible.

4. The proposal will be served by adequate public facilities including street, fire protection, and utilities; and;

Finding: The park is currently served by adequate public facilities. The proposal does not increase the need for service by public facilities.

5. The proposal includes a mitigation or restoration plan consistent with the requirements of LUC Section 20.25H.210; and

Finding: The proposal includes a restoration plan for all areas of temporary disturbance and the Parks and Community Services Department has adequate resources to ensure the restoration is successful.

6. The proposal complies with other applicable requirements of this code.

Finding: As discussed in Section IV & V of this report, the proposal complies with all other applicable requirements of the Land Use Code.

IX. Conclusion and Decision

After conducting the various administrative reviews associated with this proposal, including Land Use Code consistency, SEPA, City Code and Standard compliance reviews, the Director of the Development Services Department does hereby **approve with conditions** the Shoreline Substantial Development Permit and Critical Areas Land Use Permit for the construction of a new irrigation pump facility on 4-foot by 5-foot concrete pad and three underground water lines from the new pump extending below the existing pier to the water at Newcastle Beach Park located at 4400 Lake Washington Boulevard SE.

Note- Expiration of Approval: In accordance with LUC 20.30R.175, the Shoreline Substantial Development Permit automatically expires and is void if the applicant fails to file for a Building Permit or other necessary development permits within two years of the effective date of the approval. See LUC 20.3R.175 for additional terms regarding expiration of approval and time extensions.

In accordance with LUC 20.30P.150 a Critical Areas Land Use Permit automatically expires and is void if the applicant fails to file for necessary development permits within one year of the effective date of the approval. See LUC 20.30P.150 for additional information regarding expiration and time extensions.

X. Conditions of Approval

The applicant shall comply with all applicable Bellevue City Codes and Ordinances including but not limited to:

Applicable Ordinances	Contact Person
Clearing and Grading Code- BCC 23.76	Tom McFarlane, 425-452-5207
Land Use Code- BCC 20.25H	Kevin LeClair, 425-452-2928
Noise Control- BCC 9.18	Kevin LeClair, 425-452-2928

The following conditions are imposed under the Bellevue City Code or SEPA authority referenced:

1. Restoration for Areas of Temporary Disturbance: A restoration plan for all areas of temporary disturbance is required to be submitted for review and approval by the City of Bellevue prior to the issuance of the subsequent Building or Clearing and Grading Permit. The plan shall include the documentation of existing site conditions and shall identify the restoration measures to return the site to it's existing conditions per LUC 20.25H.220.H.

Authority: Land Use Code 20.25H.220.H
Reviewer: Kevin LeClair, Land Use

2. Rainy Season restrictions: Due to the proximity to Lake Washington, no clearing and grading activity may occur during the rainy season, which is defined as November 1 through April 30 without written authorization of the Department of Planning and Community Development. Should approval be granted for work during the rainy season , increased erosion and sedimentation measures, representing the best available technology must be implemented prior to beginning or resuming site work.

Authority: Bellevue City Code 23.76.093.A,
Reviewer: Tom McFarlane, Development Services Department

3. Noise Control: The proposal will be subject to normal construction hours of 7 am to 6 pm Monday through Friday and 9 am to 6 pm on Saturdays, except for Federal holidays and as further defined by the Bellevue City Code. Upon written

request to PCD, work hours may be extended to 10 pm if the criteria for extension of work hours as stated in BCC 9.18 can be met.

Authority: Bellevue City Code 9.18
Reviewer: Kevin LeClair, Land Use Division

4. Other State and Federal Permits: The applicant must demonstrate to the City of Bellevue that all applicable state and federal permits have been obtained prior to being allowed commence work under the City of Bellevue Clearing and Grading Permits. A Hydraulic Project Approval (HPA) permit shall be obtained from the Washington Department of Fish and Wildlife. The United States Army Corps of Engineers (USACE) shall be consulted to determine if any Federal Permits are required.

Authority: Land Use Code 20.30P.140.A
Reviewer: Kevin LeClair, Land Use

5. Other City of Bellevue Permits: The applicant has applied for a Clearing and Grading Permit in conjunction with the application for the Shoreline Substantial Development Permit and Critical Areas Land Use Permit. This Clearing and Grading Permit must be obtained and the necessary inspections conducted prior to commencement of construction activity associated with this approval.

Authority: Land Use Code 20.30P.140.A
Reviewer: Kevin LeClair, Land Use

Newcastle Beach Park Irrigation Pump Station - Vicinity Map

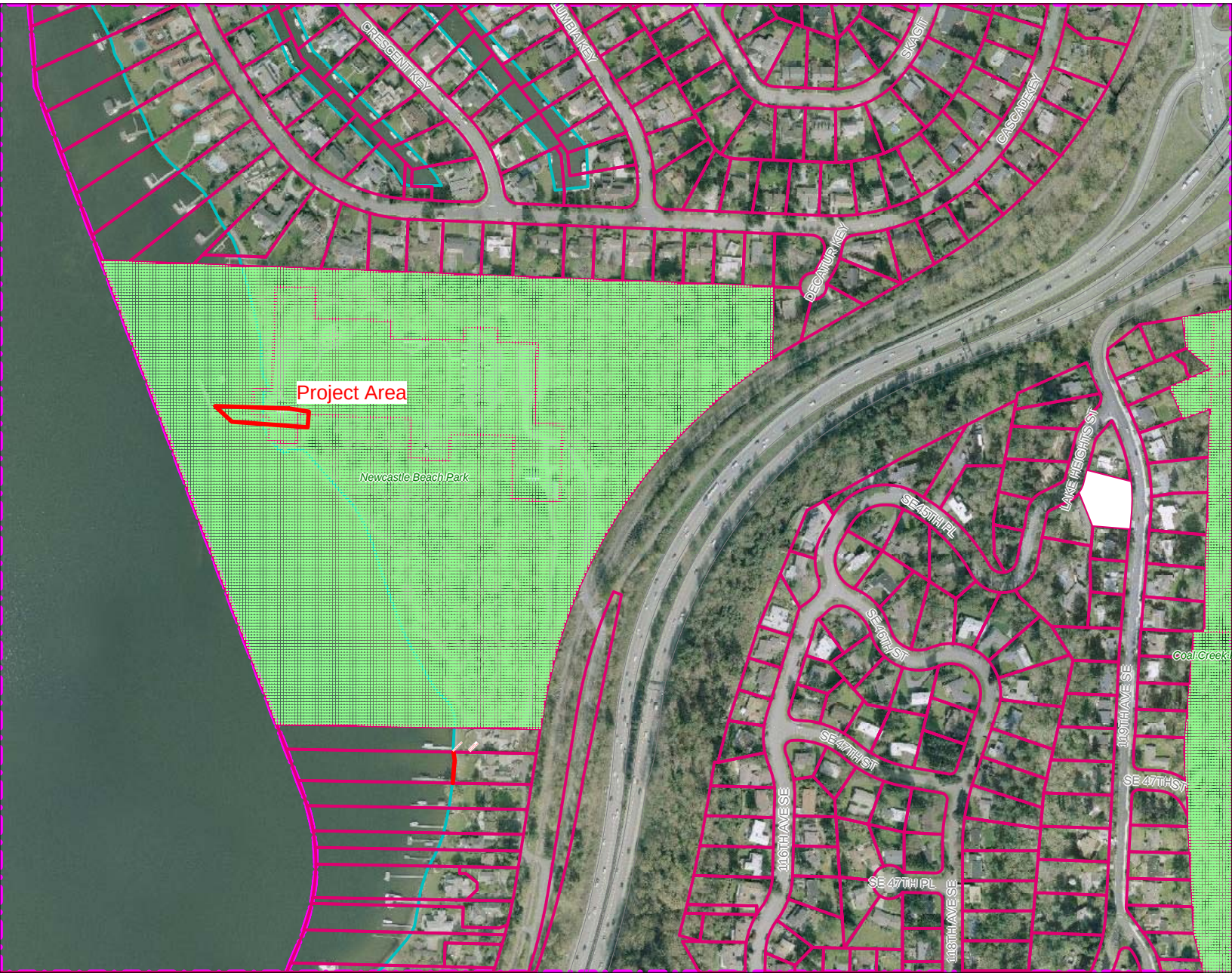

SCALE 1 : 5,213

200 0 200 400 600

FEET

N

Wednesday, March 11, 2009 10:53 AM

NEWCASTLE BEACH PARK PUMP INSTALLATION

BELLEVUE, WASHINGTON

PARKS AND COMMUNITY SERVICES DEPARTMENT
1151 MAIN STREET, BELLEVUE, WA 98005

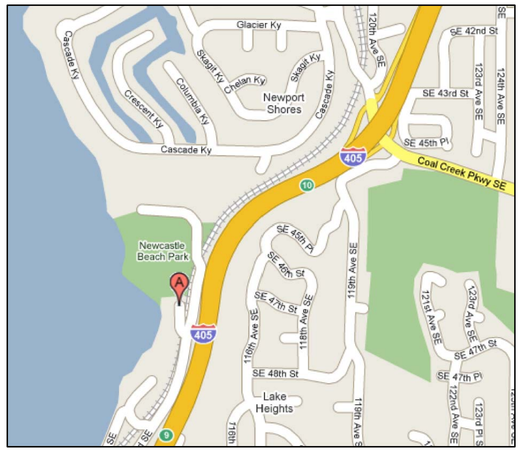

VICINITY MAP

LEGAL DESCRIPTION OF PROPERTY

S 190 FT OF N 850 FT OF GL 4 & POR GLS 4 & 5 LY N OF N LN OF RR R/W TGW SH LDS ADJ – LESS POR PLATTED LESS POR DAF – BEG AT NE COR OF SE 1/4 OF SD SEC TH S 1–32–32 W ALG E LN OF SD SUBD TO S LN OF NEWPORT DIV #2 TH N 87–45–46 W 700 FT ALG SD S LN TH S 2–14–14 W 197 FT TO TPOB TH S 2–14–14 W 240 FT TH S 87–45–46 E 85 FT S 2–14–14 W 60 FT TAP A TH CONT S 2–14–14 W 170 FT TH N 87–45–46 W 145 FT TH N 2–14–14 E 190 FT TH N 87–45–46 W 190 FT TH S 2–14–14 W 80 FT TH N 87–45–46 W 120 FT TH N 2–14–14 E 120 FT TH N 87–45–46 W 340 FT TH S 2–14–14 W 85 FT TH N 87–45–46 W 85 FT TH N 2–14–14 E 75 FT TH N 87–45–46 W 50 FT TH N 2–14–14 E 80 FT TH S 87–45–46 E 55 FT TH N 2–14–14 E 310 FT TH S 87–45–46 E 120 FT TH S 2–14–14 W 90 FT TH S 87–45–46 E 230 FT TH S 2–14–14 W 50 FT TH S 87–45–46 E 220 FT TH N 2–14–14 E 40 FT TH S 87–45–46 E 100 FT TH S 2–14–14 W 40 FT TH S 87–45–46 E 120 FT TO TPOB TGW ACCESS RD 50 FT IN WIDTH LYING WLY OF BNRR R/W LN HAVING 25 FT ON EACH SIDE OF FOLG DES C/L BEG AT NXN OF EXISTING GRAVEL RD & WLY RR R/W MGN TH N 250 FT M/L TH ALG A CRV TO LFT HAVING A RAD OF 200 FT 300 FT M/L TO SD PT A

DRAWING INDEX

DRAWING NO.	SHEET NO.	DRAWING TITLE
T–1.0	1	COVER SHEET & SRAWING INDEX
I–1.0	2	PUMP PLAN & DETAILS

Know what's below. Call before you dig.

Design Two Four/Two Six, Inc.
2821 Northup Way, Suite 225
Bellevue, WA 98004
ph. (425) 881-2426
fax (425) 576-5229
www.design2426.com
Landscape Architecture • Athletic Field Design • Irrigation Planning

NEWCASTLE BEACH

4400 Lake Washington Blvd SE
Bellevue, WA 98009

CITY OF BELLEVUE
PARKS & COMMUNITY SERVICES DEPARTMENT
450 110th Ave. NE
Bellevue, WA 98006

Design Team

Design
JA
Drawn
JA
Checked
JA
Date
562
2426 Project No.
11/12/2008
Approved/Date

Revisions

No.	Date	Description

Key Plan

Registration

STATE OF WASHINGTON
REGISTERED
LANDSCAPE ARCHITECT
JASON M. ANDERSON
CERTIFICATE NO. 938

Sheet Title

COVER SHEET

Sheet No.

T-1.0

© 2007 DESIGN 2426 INC.

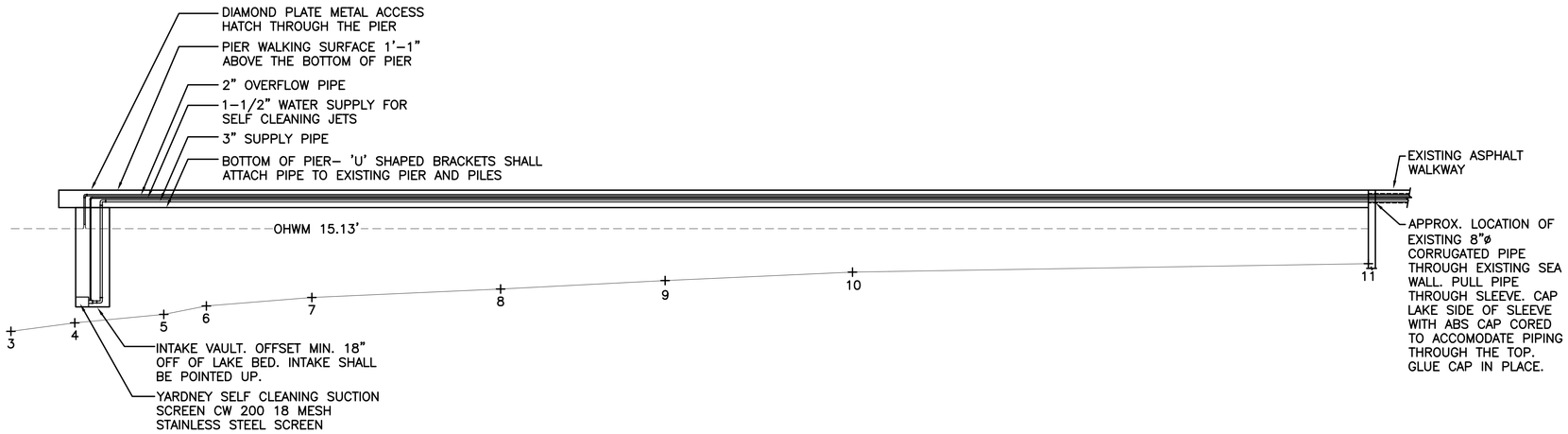

1 PUMP INTAKE & VAULT

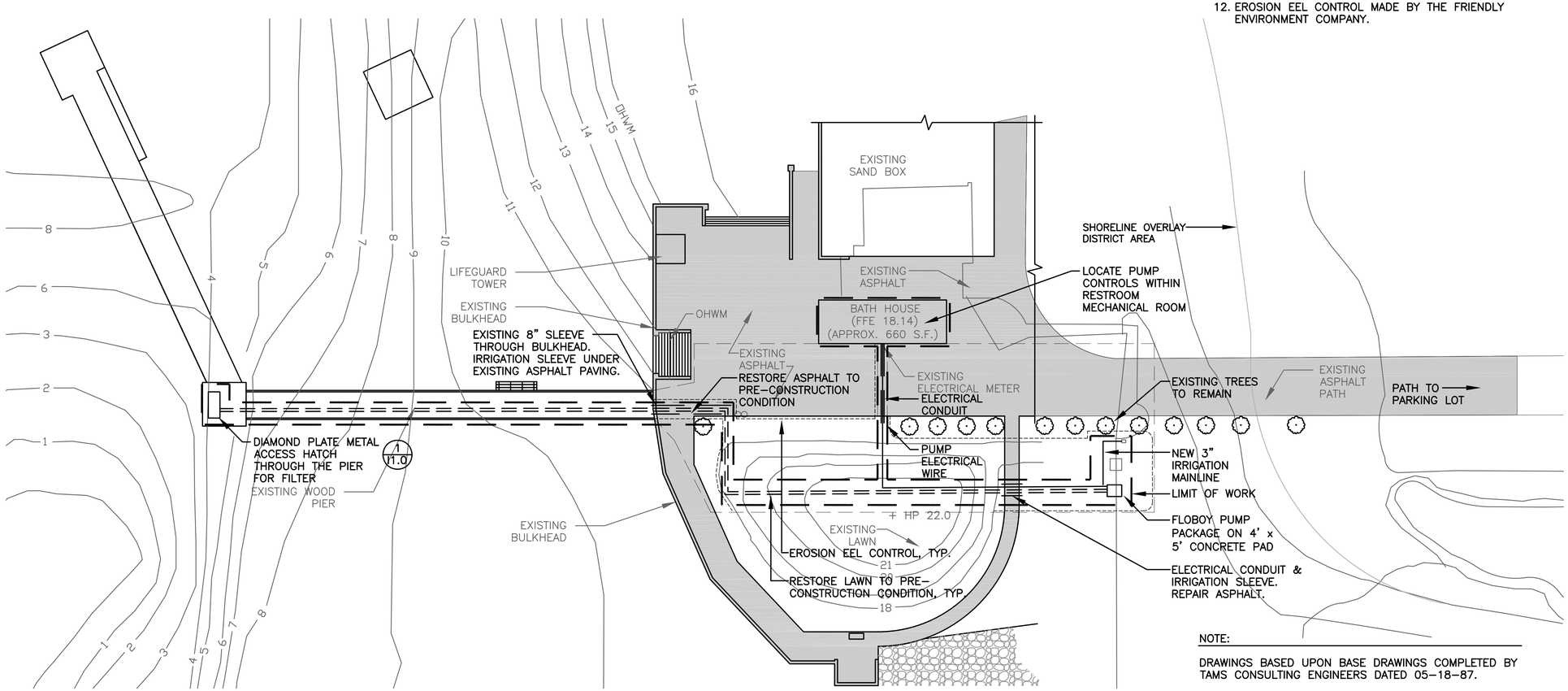

2 SITE PLAN

NOTE:

DRAWINGS BASED UPON BASE DRAWINGS COMPLETED BY TAMS CONSULTING ENGINEERS DATED 05–18–87.

Know what's **below.** **Call** before you dig.

NOTES:

1. APPROXIMATE AREA OF DISTURBANCE 2,640 S.F.
2. THE NEW IRRIGATION PUMP WILL BE PULLING 90 GPM FROM THE LAKE.
3. EXISTING IMPERVIOUS AREA SHOWN 14,221 S.F.
4. PROPOSED IMPERVIOUS AREA 20 S.F.
5. ALL TRENCHING AND EXPOSED SOILS WILL BE COMPLETED WITHIN 5 DAYS.
6. WATER LINE TRENCH DEPTH SHALL BE 24".
7. ELECTRICAL LINE TRENCH DEPTH SHALL BE 36".
8. TRENCHES IN EXISTING LAWN AREAS WILL BE RESTORED WITH SOD.
9. NO MORE TRENCHES SHALL BE OPENED THAT CAN BE CLOSED IN A SINGLE DAY AND OPEN TRENCHES MUST BE CLOSED AT THE END OF EACH DAY.
10. AT THE END OF EACH WORKING DAY, THE CLOSED TRENCHES SHALL BE PERMANENTLY STABILIZED. BONDED FIBER MATRIX WITH SEED MIX OR AN APPROPRIATE EROSION CONTROL MATTING WITH SEEDING MUST BE USED.
11. THE TRENCH EXCAVATION SHALL BE DONE DURING A DRY WEATHER PERIOD.
12. EROSION EEL CONTROL MADE BY THE FRIENDLY ENVIRONMENT COMPANY.

Design Two Four/Two Six, Inc.
2821 Northup Way, Suite 225
Bellevue, WA 98004
ph. (425) 881-2426
fax (425) 576-5229
www.design2426.com
Landscape Architecture • Athletic Field Design • Irrigation Planning

NEWCASTLE BEACH

4400 Lake Washington Blvd SE
Bellevue, WA 98009

CITY OF BELLEVUE
PARKS & COMMUNITY SERVICES DEPARTMENT
450 110th Ave. NE
Bellevue, WA 98006

Design Team

Design: JA
Drawn: JA
Checked: JA
Date: 562
2426 Project No.: 11/12/2008
Approved/Date

Revisions

No.	Date	Description

Key Plan

Registration

STATE OF WASHINGTON REGISTERED LANDSCAPE ARCHITECT
JASON M. ANDERSON
CERTIFICATE NO. 636

Sheet Title

PUMP PLAN & DETAILS

Sheet No.

I-1.0

© 2007 DESIGN 2426 INC.

City of Bellevue Shoreline Substantial Development and Critical Area Permit Performance Standards and Decision Criteria.

The City of Bellevue Parks Department (City Parks) proposes to install an irrigation system to serve the irrigation needs of Newcastle Beach Park (Park) on the eastern shore of Lake Washington. City Parks would construct a new irrigation pump facility in the Park to draw up to 90 gallons per minute (GPM) and 10.1 acre feet per year (afy) of water from the lake via a new irrigation intake and line (project). This is consistent with the Washington State Department of Ecology (Ecology) Water Right that has been granted to the City of Bellevue (City). Based on conversations between the project team and Michael Paine, City Environmental Planning Manager, the project would require a City shoreline permit and demonstration of consistency with City critical areas regulations (this submittal is to provide for both of those requirements). The project would be exempt from SEPA regulation due to the size of the water right claimed for Newcastle Beach Park, as described above, and the provisions of WAC 197-11-800 (4). Furthermore, the SEPA exemption covers any additional shoreline, fisheries or building permits that may result from the project.[1]

The project would entail the installation of a new irrigation pump, three water lines extending from the new pump to the water below ground and below an existing pier. Electrical control lines would also extend below ground from the pump to a control panel to be located in the existing bath house. Currently, the Park's irrigation system uses City potable water. The project would result in the use of non-potable lake water, thus conserving potable water, by connecting the project's new system components to the Park's existing irrigation system. Plans for the proposed irrigation pump facility, water lines, water intake and electrical pump control line (and several photos of the site area) are attached. As detailed on plan sheet I-1.0 (attached), the approximate total area of disturbance is 2,640 square feet (sf) and the total new impervious area is approximately 20 sf. Approximately 14,221 sf of impervious surface exists in the project area. The proposed addition of 20 sf of impervious area, for the pump facility on a 4 x 5-foot concrete pad, would result in a total site area impervious surface of approximate 14,241 sf. The 2,640 sf of disturbance would be temporary with soils anticipated to be exposed for no more than five days. No long term impacts are anticipated to result from the project.

The pump facility would be placed on a new 4 by 5-foot concrete pad to be located approximately 160 feet landward of the shoreline/OHWM (defined by the existing bulkhead in the project area) and approximately 50 feet south of the existing bath house (sheet I-1.0 "Floboy Pump Package"). The 4 by 5-foot pump station pad is the only new impervious area associated with the project, totaling approximately 20 square feet. Electrical pump controls would be

---

[1] Email correspondence from Michael Paine, City of Bellevue, Environmental Planning Manager to Don Hardy, Senior Planner, JD White a division of Berger/Abam Engineers Inc., dated July 31, 2008.

located in an existing mechanical room within the bath house, with electrical control lines extending below ground at a depth of approximately 36-inches to the pump facility. The irrigation line, and two associated lines, would be PVC pipes which would extend west from the pump station through the existing bulkhead, via a new 8-inch corrugated metal sleeve, to the existing pier. The irrigation line would be connected to a Yardney self cleaning water intake which would be equipped with a fish screen consistent with applicable Washington Department of Fish and Wildlife (WDFW) requirements.[2] The intake velocity through the fish screen would be less than 0.4 feet per second and it would be maintained to prevent injury or entrapment of fish. The intake would be at least 18 inches above the lake bottom and would be located below the existing pier.

The 3-inch irrigation line is associated with a 1.5-inch water supply line (to provide for the Yardney self cleaning intake screen jets) and 2-inch overflow line which is to allow the strainer at the pump to be back flushed (water lines). All of those lines would be buried approximately 24 inches below existing grade, and would extend from the new irrigation pump to the west below the paved walkway, penetrating the bulkhead and, west of the bulkhead, connecting to the pier with metal "U" brackets and extending to the water intake which would be located in the water, below the pier at a point approximately 150 feet west of the bulkhead. Below the pier, the water lines would be contained within an enclosure consisting of the pier's existing deck (walking surface) and structural aprons that extend vertically from the deck to the water on the north and south sides of the pier. The deck and structural aprons prevent public access to the area below the pier and would prevent access to the proposed water intake and lines. The access to the filter will be a hole cut through the dock. A frame will be set in the hole. The frame will attach to the ends of the cut timbers. A diamond plate metal lid will be attached to the frame to cover the hole. The lid will be recessed to allow for a lock and clasp. The vault will be attached to the bottom of the pier and sit below the lid. The vault will house the filter, intake, and overflow.

The project would entail minimal disturbance of the earth in the short term and no unmitigated impacts anticipated in the long term. Short term project impacts would be limited to activities associated with trenching to install the water lines and electrical pump control lines and the installation of the 4 by 5-foot concrete pad (see "limit of work" area shown on plan sheet I-1.0). The project work area is anticipated to be approximately 2,640 square feet with all trenching work anticipated to be complete within 5 days of initiation (including stabilization of exposed soils). Best Management Practices (BMPs), such as the proposed use of erosion eels to surround the entire limit of work area, would be employed. All trenching and exposed soils will be completed within 5 days. Trenching in existing lawn areas will be restored with sod. Trench

---

[2] Please see attached Yardney Water Management Systems product specification sheet and WDFW Fish Passage Technical Assistance document.

excavation would be performed during a dry weather period, no more trenches will be opened than can be closed in a single day and at the end of each working day the trenches will be closed and permanently stabilized with a bonded fiber matrix with seed mix or an appropriate erosion control matting with seed will be used. No impact to the water is anticipated as a result of the project, including the installation of the irrigation line below the pier, and no long term impacts are anticipated to occur on land or within the water.

The project is located mainly within parcel number 1724059038 with the water lines extending through a portion of parcel 1724059044 near the shoreline. Those parcels are City zoned residential (R-2.5) with comprehensive plan designations of Park/medium density residential (P/SF-M). The entire project is within the City's shoreline overlay district (i.e. within 200 feet of the OHWM), but no part of the project is within any other known critical area. The Park has been developed to offer a variety of recreational activities.

The project would be constructed and operated consistent with the water right transferred by King County Water District No. 1 to the City under Ecology's authorization. The project must be constructed by April 1, 2009 as there is a project completion date identified in the water right transfer agreement. City Parks will file for all applicable permits from the City as well as a US Army Corps of Engineers Section 10 permit and a Hydraulic Project Approval from the WDFW.

This project proposal is similar to, but smaller in overall scale than, the City of Kirkland, Washington, Lake Washington Irrigation Water Withdrawal Project, which was granted all necessary state and federal agency approvals in 2007.

What follows is a demonstration of the project's consistency with applicable City shoreline permit and critical areas criteria and regulations.

Shoreline Goals and Policies (from Comprehensive Plan)

Goals:

1. **To protect and enhance the natural and developed shorelines of the city.**
2. **To ensure that the city's shorelines are planned for optimal use of this limited resource, to provide amenities to protect the natural environment, and to enhance the aesthetic quality of the shoreline.**
3. **To protect, preserve, and enhance the natural resources and amenities of the city's shorelines for use and enjoyment by present and future generations.**

4. To increase public, physical, and visual access to and along the city's shoreline areas.

5. To encourage and increase water-related recreational activities for the public on the city's shorelines when appropriate and consistent with the public interest.

6. To recognize existing residential uses and to regulate new residential construction within the intent of shoreline policies.

7. To discourage expansion of commercial uses and activities on the city's Lake Washington and Larsen Lake shorelines, except where those commercial uses or activities are water-dependent.

8. To encourage a balanced circulation system along existing corridors within shoreline areas.

The project is consistent with goals 1 – 4 above by providing for Park landscape irrigation using non-potable lake water, rather than City potable drinking water as is currently used, consistent with the recently transferred water right. The project is anticipated to result in no unmitigated short or long term impacts and it would provide an alternative to using City potable water that provide for less expensive irrigation to maintain the Park's landscaping. The project would, therefore, provide for the natural character and aesthetic quality of the shoreline area while encouraging public use and enjoyment of the shoreline. Goals 5– 8 do not apply to the project.

Policies:

The following policies have been adopted by the State (June 1992) in accord with the Shoreline Management Act. Shoreline Management Program Element Page 256

Shoreline Uses and Activities

POLICY SH-1. Plan for reasonable and appropriate shoreline uses.

Discussion: Bellevue's shorelines are primarily residential in use with some natural areas and commercial uses. Uses and activities should balance environmental needs, the public interest, and private property rights.

The proposed irrigation system is necessary to provide irrigation for landscaping within the Park and will provide an alternative irrigation source for landscaping in order to permit protection of the natural character of the Park. There are no residential or commercial uses existing or, proposed within the Park. The project is within the shoreline overlay district, but no part of the project is within any other known critical area. BMPs would be employed during construction although the project is anticipated to entail minimal disturbance of the area, limited to trenching associated with the installation of the water lines, pump control line, and installation of the pump facility pad. Due to the limited construction necessary the installation of the water lines and water intake on the existing pier is not anticipated to result in any impacts to the water. The water lines are to be connected to the pier below the deck and

between the structural aprons that, together, will envelop the waterlines and intake. The water lines would be affixed to the pier structure using metal "U" brackets and the water lines and intake will be accessible via a hatch in the pier deck (see plan sheet I-1.0).

The public interest is served because the project would result in the use of non-potable lake water for irrigation, rather than potable City water, with no long-term adverse environmental effects anticipated, and the irrigation system will continue to promote Park recreational use of the shoreline area.

POLICY SH-2. Discourage short-term economic gain or convenience in development when potential, long-term adverse effects on the shoreline are possible.

The proposed irrigation system would result in minimal disturbance of the shoreline or near-shore environment and no long-term adverse effects on the environment are anticipated as a result of the projects as all irrigation water withdraws will be consistent with applicable city, state and federal regulations.

POLICY SH-3. Give priority to uses and activities which improve or are compatible with the natural amenities of the shorelines, provide public access, or depend on a shoreline location.

The proposed irrigation system is necessary to provide irrigation for landscaping within Park thereby providing for the natural character of the Park and the shoreline area. The proposed irrigation system would be operated consistent with the water right transferred to the City (described above) and because the system would use non-potable lake water, rather than City potable water, the project depends upon the proposed location within the shoreline overlay district.

POLICY SH-4. Limit the density and intensity of shoreline uses and activities through planning, zoning, capital improvements, and other policy and regulatory standards.

Discussion: Exceptions to shoreline uses, through the Shoreline Conditional Use process, may be considered if they meet a demonstrated need of the city and then only if they are in accordance with other shoreline policies.

The proposed irrigation system would provide for the irrigation needs of the Park consistent with the City water right and the irrigation water will be used to maintain existing landscaping that provides for park activities consistent with intended public park use.

POLICY SH-5. Plan and designate shorelines suited for public water-enjoyment uses.

The existing Park provides for water-enjoyment uses and the proposed irrigation system will continue to promote Park water enjoyment uses.

POLICY SH-6. Consider and encourage aesthetic values when reviewing development of the shoreline.

Discussion: Consider aesthetic values such as public views, landscaping, and compatible site design.

The proposed irrigation system would provide for the irrigation needs of the Park consistent with applicable shoreline overlay district regulations. As a result, the project would assist in the preservation of the natural character of the shoreline and near-shore environments. The majority of the project's components would be buried or otherwise hidden from view by existing structures. The only component of the project that would be visible to the casual observer is the pump facility proposed to be placed on a new 4 by 5-foot concrete pad and within a sheet metal housing which would appear much the same as the existing utility box located just north of the proposed pump facility location. Areas of ground disturbance will be restored with sod upon project completion. As a result, the project is not anticipated to negatively affect aesthetic values or public views.

POLICY SH-7. Discourage expansion or redevelopment of existing shoreline uses or activities that are incompatible with the shoreline environment.

As the proposed irrigation system will not expand or redevelop the Park, this policy is not applicable to the project.

Shoreline Management Program Element Page 257

Discussion: Shoreline uses or activities not specified in this document should be consistent with the intent of the shoreline goals and policies.

POLICY SH-8. Discourage uses, activities, and developments in the shoreline area that create offensive, unsafe, or unmitigated adverse impacts.

The proposed irrigation system is not anticipated to result in any unmitigated adverse impacts to the shoreline area. The proposed project is within the shoreline area, but no part of the

project is within any other critical area. The project would entail approximately 2,640 square feet of ground disturbance within the shoreline overlay district area in association with the installation of the water lines and pump electrical controls which would require trenching to extend landward of the shoreline. All work associated with the trenching is anticipated to be complete within 5 days of initiation (including stabilization of exposed soils) and Best Management Practices (BMPs) such as silt fencing of the entire limit of work area would be employed if necessary during construction. No impacts are anticipated as a result of the project, including the installation of the irrigation line below the pier, and no long term impacts are anticipated to occur on land or in Lake Washington as a result of the project.

POLICY SH-9. Preserve the natural amenities and resources of the shorelines in the context of existing and planned residential, recreational, and commercial land uses.

The proposed irrigation system would provide for the existing irrigation needs of the Park consistent with the City water right described above and applicable shoreline overlay district regulations. The project is not anticipated to negatively effect any existing or planned land uses and would decrease the use of City potable water for irrigation.

POLICY SH-10. Encourage development to keep the water's edge free of buildings.

No buildings are proposed, therefore, this policy does not apply.

POLICY SH-11. Consider the impacts on shorelines from uses and activities in the related drainage basins as a part of shoreline planning.

The applicant is aware of no other projects within the drainage basin that would impact this project.

Conservation

POLICY SH-12. Designate and preserve environmentally sensitive areas. If necessary, control access and use for the protection of these areas.

The project is not anticipated to affect environmentally sensitive areas and no long term impacts are anticipated to result from the project. The purpose of the project is to provide for the irrigation needs of the Park while decreasing the use of City potable water which is currently

used for irrigation within the Park. The project, therefore, provides for the natural character of the shoreline while decreasing the use of City potable water.

POLICY SH-13. Protect and improve wildlife and aquatic habitats, particularly spawning waters.

The proposed irrigation withdrawal facilities will have no effect on the existing function and value of the wildlife and aquatic habitats within the general project area. The structures associated with the irrigation intake will be suspended from the exiting pier and will not disturb the benthic lake environment or otherwise disturb potential spawning or migration areas. BMP's used during the construction of the facilities will include sediment fencing, protection of storm water inlets (if applicable), and straw wattles. Immediately following the installation of the necessary water lines and pump wires, the disturbed area will be restored to original contours and sodded.

POLICY SH-14. Maintain water quality to permit swimming and other recreational uses.

The project is not anticipated to effect swimming and/or other recreational uses in the Park. The project would be constructed and operated consistent with the water right transferred by King County Water District No. 1 to the City under Ecology's authorization. That permit allows the Park to draw up to 90 GPM and 10.1 afy of water from the lake.

POLICY SH-15. Discourage landfill and dredging in the shoreline area.

Discussion: Landfill or dredging may be permitted where necessary for the maintenance or restoration of shoreline property where no other practical alternatives are available. Also, landfill and dredging may be permitted if there is no net reduction of surface waters of the lake and no significant adverse impact to fish, wildlife, and adjacent property.

No landfill or dredging is proposed with the project, therefore, this policy does not apply.

POLICY SH-16. Discourage structures using materials which have significant adverse physical or chemical effects on water quality, vegetation, fish, and wildlife in or near the water.

Materials proposed for use with the project are/would be specified by project engineers for optimal suitability and durability. The waterlines would be PVC and the sleeve to be installed through the existing bulkhead would be an 8-inch corrugated metal pipe. Other project materials include concrete, sheet metal, electrical conduit appropriate for underground use and possibly other durable materials similar to those used by the City of Kirkland for the Lake Washington Irrigation Water Withdrawal project. No adverse physical or chemical effects on water quality, wildlife or vegetation are anticipated as a result of the project.

Shoreline Management Program Element Page 258

POLICY SH-17. Protect and restore shoreline areas which have historical, cultural, educational, or scientific value.

Discussion: These special shoreline areas should not be changed until their value and use are determined. Once determined, public and private cooperation should be encouraged in site preservation and protection. Temporary uses appropriate to shoreline activity involving public interest and not substantially degrading water quality and unique and fragile areas could be permitted.

The project would result in no significant changes to the natural character of the shoreline and would not negatively affect known historical or culturally significant areas and/or features.

POLICY SH-19. Maintain an optimum water flow in the Mercer Slough Canal.

Based on the small volume of water anticipated to be withdrawn from Lake Washington (maximum 90 GPM/10.1 afy), the fact that the project is anticipated to result in no long term impacts and no unmitigated short term impacts, the project is anticipated to result in no impacts to water flows in the Mercer Slough Canal.

Public Access

POLICY SH-27. Preserve and enhance views of shoreline and water from public areas.

Discussion: Enhancement of views shall not be construed to mean excessive removal of vegetation or disturbance in environmentally sensitive areas.

The project would provide for the irrigation needs of the Park landscaping thereby preserving and/or enhancing views of the shoreline. Vegetation disturbed during the construction of the

property will be limited to maintained lawn areas. These areas will be restored immediately after the installation of the irrigation infrastructure by placing sod over the disturbed areas. Upon completion, no structures will obstruct views of the waterfront.

Land Use Development Code

The project is a "new or expanded City Parks" use per the allowed uses table in City Land Use Code (LUC) section 20.25H.050 Uses and Development in the Critical Areas Overlay District:

20.25H.055 Uses and development allowed within critical areas – Performance standards.
The uses and/or development described in subsection B of this section may be undertaken in a critical area or critical area buffer if all of the requirements of the referenced sections are met. A Critical Areas Land Use Permit shall be required unless otherwise noted.

> *A. Hierarchy of Alteration.*
> *Where a use or development is proposed on a site with more than one type of critical area, preference shall be given to disturbing those critical areas with the least sensitivity to human disturbance, based on a consideration of both existing functions and values, and future functions and values if left undisturbed.*

The proposed facility and its components would be located within the shoreline overlay district area, but no part of the project would be within any other known critical area. The project would entail minimal temporary disturbance to the shoreline area which is, for the most part, maintained lawn and public facilities.

> *B. Uses and Development Allowed within Critical Areas.*
> *The following chart lists uses and development that may be allowed in a critical area, critical area buffer, or critical area structure setback. The sections noted in the chart for each use or activity and critical area refer to the applicable performance standards that must be met.*

The chart in this section lists Allowed Uses and Developments by types of critical areas and the LUC sections that would apply. It appears that the proposed irrigation system would be considered as a "new or expanded City and Public Parks" use to which the following sections would apply:

20.25H.055.C.3.g - Performance Standards
The following performance standards apply as noted in the table in subsection B of this section. The critical areas report may not be used to modify the performance standards set forth in this subsection C:

3. Performance Standards for Specific Uses or Development. In the event of a conflict between the generally applicable performance standards and specific standards, those more protective of critical area functions and values shall prevail.

g. New and Expanded City and Public Parks.
i. Trails. New nonmotorized trails within the critical area or critical area buffer must meet following standards:
(A) Trail location and design shall result in the least impacts on the critical area or critical area buffer;
N/A

(B) Trails shall be designed to compliment and enhance the environmental, educational, and social functions and values of the critical area with trail design and construction focused on managing and controlling public access and limiting uncontrolled access;
N/A

(C) Trails shall be designed to avoid disturbance of significant trees and to limit disturbance of native understory vegetation;
N/A

(D) Trails shall be designed to avoid disturbance of habitat used for salmonid rearing or spawning or by any species of local importance;
N/A

(E) The trail shall be the minimum width necessary to accommodate the intended function or objective;
N/A

(F) All work shall be consistent with the City of Bellevue's "Environmental Best Management Practices" and all applicable City of Bellevue codes and standards, now or as hereafter amended;

As identified above and in the attached plans, BMPs would be employed, as necessary, to ensure that the project is conducted consistent with current applicable City codes and standards. BMP's during the construction of the project will be focused on preventing unintended impacts to the shoreline area.

(G) The facility shall not significantly change or diminish overall aquatic area flow peaks, duration or volume or flood storage capacity, or hydroperiod;

The project would be constructed and operated consistent with the water right transferred by King County Water District No. 1 to the City of Bellevue under Ecology's. Based on the

anticipated level of withdrawal, the project will have no net effect on water levels within Lake Washington. Since the project is located entirely outside of the floodplain, no changes to the flood storage capacity will occur.

(H) Where feasible and consistent with any accessibility requirements, any trail shall be constructed of pervious materials;
N/A

(I) Crossings over and penetrations into wetlands and streams shall be generally perpendicular to the critical area, and shall be accomplished by bridging or other technique designed to minimize critical area disturbance considering the entire trail segment and function; and
N/A

(J) Areas of new permanent disturbance and all areas of temporary disturbance shall be mitigated and/or restored pursuant to a mitigation and restoration plan meeting the requirements of LUC. 20.25H.210.
The trenching necessary for the project will result in the temporary disturbance of approximately 2,640 sf of earth. The utility trench and any exposed soils are anticipated to be restored through the installation of sod within 5 days of project initiation. The only permanent structure that will exist following completion of the project is a small concrete pad (4 by 5-foot area) on which the water pump will be placed. The location of the pump pad currently exists as maintained lawn area. Due to the existing conditions of the site and the minimal amount of permanent impacts (20 sq. ft.), no tangible impacts to shoreline functions are anticipated. As such, formal mitigation or restoration has not been planned outside of the restoration of temporarily disturbed areas.

> *20.25H.210 Applicability.*
> *Where a mitigation or restoration plan is required under this part or Part 20.25E LUC, the plan shall be developed in accordance with the standards of LUC 20.25H.210 through 20.25H.225 inclusive. Any mitigation or restoration plan shall be approved as part of the permit or approval required for the underlying activity. Where a project requires a critical areas report and a mitigation or restoration plan, the mitigation or restoration plan may be included with the critical areas report.*
>
> Based on the details of the project, no impacts that would require a mitigation or restoration plan are proposed. Therefore, this criteria does not apply to the project.

ii. Public Use Structures.

(A) New or expanded permanent public use structures, including interpretative centers, community centers, and other structures designed for public use and access are allowed in the critical area or critical area buffer only if no technically feasible alternative with less impact on the critical area or critical area buffer exists. A determination of technically feasible alternatives will consider:

(1) The location of existing infrastructure;

The project is to connect to the existing irrigation infrastructure in order to provide access to lake water, rather than potable city water, for irrigation purposes within the Park. Based on the location of existing irrigation lines, the pier to which the water lines and water intake will connect, and electrical service there are no other suitable alternative locations for the project to be completed.

(2) The function or objective of the proposed new or expanded structure;

The proposed project is to connect to the existing irrigation infrastructure in order to provide access to lake water, rather than potable city water, for irrigation purposes within the Park.

(3) Demonstration that no alternative achieves the stated function or objective;

Proposed irrigation facilities are to connect to existing irrigation facilities and, as a result, the proposed irrigation system components can not be located elsewhere. The proposed facility location takes advantage of the existing pier and minimizes disturbance to the shoreline area while achieving the project purpose.

(4) Whether the cost of avoiding disturbance is substantially disproportionate as compared to the environmental impact of proposed disturbance; and

Minimal impacts are anticipated as a result of the project. While the location of the project is constrained by the location of existing infrastructure, the water lines and associated pump wiring could feasibly be installed using bore technology. While this would prevent the temporary impacts associated with trenching, the cost of utilizing this technology far outweigh the slight reduction in temporary impacts from trenching through the lawn areas.

(5) The ability of both permanent and temporary disturbance to be mitigated.

Minimal impacts are anticipated as a result of the project. The project area will disturb a total of 2,640 square feet, with earth disturbing work anticipated to be complete within 5 days of commencement. All disturbed areas will be restored with sod upon project completion. The only permanent impact will be the construction of a 20 sq. ft. concrete pad upon which the needed pump will be placed. Based on the existing conditions of the site (as maintained lawn) and the small size of the proposed pad, formal mitigation will not be required to assure that shoreline functions and values will not be impacted.

(B) If the applicant demonstrates that no technically feasible alternative with less impact on the critical area or critical area buffer exists, then the applicant shall comply with the generally applicable performance standards of subsection C.2.b of this section.

The project is to connect to the existing irrigation infrastructure in order to provide access to lake water, rather than potable city water, for irrigation purposes within the Park. Based on the location of existing irrigation lines, the pier to which the water lines and water intake will connect, and electrical service there are no other suitable alternative locations for the project to be completed.

20.25H.055.C.2.b

If the applicant demonstrates that no technically feasible alternative with less impact on the critical area or critical area buffer exists, then the applicant shall comply with the following:

- *i. Location and design shall result in the least impacts on the critical area or critical area buffer;*
- *ii. Disturbance of the critical area and critical area buffer, including disturbance of vegetation and soils, shall be minimized;*
- *iii. Disturbance shall not occur in habitat used for salmonid rearing or spawning or by any species of local importance unless no other technically feasible location exists;*
- *iv. Any crossing over of a wetland or stream shall be designed to minimize critical area and critical area buffer coverage and critical area and critical area buffer disturbance, for example by use of bridge, boring, or open cut and perpendicular crossings, and shall be the minimum width necessary to accommodate the intended function or objective; provided, that the Director may require that the facility be designed to accommodate additional facilities where the likelihood of additional facilities exists, and one consolidated corridor would result in fewer impacts to the critical area or critical area buffer than multiple intrusions into the critical area or critical area buffer;*
- *v. All work shall be consistent with applicable City of Bellevue codes and standards;*
- *vi. The facility or system shall not have a significant adverse impact on overall aquatic area flow peaks, duration or volume or flood storage capacity, or hydroperiod;*
- *vii. Associated parking and other support functions, including, for example, mechanical equipment and maintenance sheds, must be located outside critical area or critical area buffer except where no feasible alternative exists; and*
- *viii. Areas of new permanent disturbance and all areas of temporary disturbance shall be mitigated and/or restored pursuant to a mitigation and restoration plan meeting the requirements of LUC 20.25H.210.*

As stated above, there are no serviceable alternative locations for the project to be completed. No long term impacts and minimal short term impacts are anticipated as a result of the project. No impacts to salmonid habitat or species of local importance habitat are anticipated and no

wetland or stream crossings are proposed. All work would be conducted consistent with applicable City codes and standards.

Short term project impacts would be limited to activities associated with trenching to install the water lines and electrical pump control lines and the installation of the 4 by 5-foot concrete pad (see "limit of work" area shown on plan sheet I-1.0). The project work area is anticipated to be approximately 2,640 square feet with all trenching work anticipated to be complete within 5 days of initiation (including stabilization of exposed soils). Best Management Practices (BMPs) such as silt fencing of the entire limit of work area would be employed if necessary during construction. No impact to the water is anticipated as a result of the project, including the installation of the irrigation line below the pier, and no long term impacts are anticipated to occur on land or within the water.

iii. Other Parks Uses. Other parks uses proposed within the critical area or critical area buffer, including public access drives, public loading areas, and public boat launches and ramps, shall meet the generally applicable performance standards of subsection C.2.b of this section; provided, that active use playfields shall not be allowed in critical area or critical area buffers; and provided, that parking supporting parks uses shall be allowed in a critical area buffer only if no technically feasible alternative, as demonstrated through application of the criteria of subsection C.2.a of this section, exists.

The project will not result in additional uses. The purpose of the project is to provide for the irrigation needs of the Park while decreasing the use of City potable water which is currently used for irrigation within the Park. The project, therefore, provides for the natural character of the shoreline while decreasing the use of City potable water.

20.25E.080.B - Shoreline performance standards

B. General Regulations Applicable to All Land Use Districts and Activities.

1. Where applicable, all federal and state water quality and effluent standards shall be met.

The project will be constructed and operated consistent with applicable federal state and local regulations regarding water quality and effluent standards.

2. If a property extends into the Shoreline Overlay District, the Shoreline Master Program Policies and these use regulations shall apply only to that portion of the property lying within the Shoreline Overlay District.

The project would take place within the shoreline overlay district. Accordingly, the project will be constructed and operated consistent with applicable shoreline overlay district standards.

3. All development within the Shoreline Overlay District shall be accompanied by a plan indicating methods of preserving shoreline vegetation and for control of erosion during and following construction in accordance with Part 20.25H LUC, City of Bellevue Clearing and Grading regulations, Chapter 23.76 BCC, and the Comprehensive Plan.

This shoreline permit narrative and the project plans included in the application package identify BMPs and other measures that will be employed to preserve and protect shoreline vegetation and prevent erosion consistent with applicable local, state and federal regulations. As stated above, the project is anticipated to entail the disturbance of approximately 2,640 sf of earth, associated with trenching necessary for the project. The trenching and any exposed soils are anticipated to be restored with sod within 5 days of project initiation. BMPs such as silt fencing and straw wattles would be employed as necessary.

4. Special care shall be exercised to preserve vegetation in wetland, shoreline and stream corridor bank areas in order to prevent soil erosion. Removal of vegetation from or disturbance of shoreline critical areas and shoreline critical area buffers, and from other critical area and critical area buffers shall be prohibited, except in conformance with Part 20.25H LUC and the specific performance standards of this section.
The only vegetation that will be disturbed by the completion of the project are maintained lawn areas that will be temporary disturbed during the trenching process.

5. Maximum height limitation for any proposed structure within the Shoreline Overlay District shall be 35 feet, except in land use districts with more restrictive height limitations. The method of measuring the maximum height is described in WAC 173-14-030(6). Variances to this height limitation may be granted pursuant to Part 20.30H LUC.
The only structure proposed that would be visible to the casual observer would be the "Floboy" pump facility which would be housed in a sheet metal box of no more than approximately 3 feet in height and appearing much like the utility box that already exists to the north of the proposed pump facility location.

6. The Bellevue Shoreline Master Program, in conjunction with existing Bellevue land use ordinances and Comprehensive Plan policies, shall guide all land use decisions in the Shoreline Overlay District.
The project will be constructed and operated consistent with applicable local, state and federal regulations.

7. Any development within the Shoreline Overlay District shall comply with all applicable Bellevue ordinances, including but not limited to the Bellevue Land Use Code, Sign Code, and clearing and grading regulations.
The project will be constructed and operated consistent with applicable local, state and federal regulations.

8. The dead storage of watercraft seaward of the ordinary high water mark of the shoreline is prohibited.
The project includes no provisions regarding the storage of watercraft, therefore, this standard does not apply.

9. Where applicable, state and federal standards for the use of herbicides, pesticides and/or fertilizers shall be met, unless superseded by City of Bellevue ordinances. Use of such substances in the shoreline critical area and shoreline critical area buffer shall comply with the City's "Environmental Best Management Practices."
The project is not anticipated to include the use of herbicides or pesticides. There is a possibility that a small amount of fertilizer would be used in the restoration of the approximately 2,640 sf of area anticipated to be disturbed as a result of the installation of the pump station and related system components. The use of any such substances would be consistent with applicable local, state and federal regulations.

10. Adequate storm drainage and sewer facilities must be operational prior to construction of new development within the Shoreline Overlay District. Storm drainage facilities shall be separated from sewage disposal systems.
The project will not involve the use of storm drainage or sewer facilities, therefore, this standard does not apply.

B20.25E.080.P.
P. Recreation Activities Regulations.
1. Swimming shall be separated from public or semipublic boat launching areas.
The project is not anticipated to affect swimming or boat launching facilities, therefore, this standard does not apply.

2. Public street ends in the Shoreline Overlay District may be developed for public recreational activities.
The project includes no modifications to streets, therefore, this standard does not apply.

3. Recreational activities within the Shoreline Overlay District shall be permitted when designed subject to the provisions of the Bellevue Shoreline Master Program and its use regulations.
The project is not anticipated to affect access to recreational activities, therefore, this standard does not apply.

4. Public and private recreation activities in the shoreline critical area and shoreline critical area buffer shall comply with the requirements of LUC 20.25H.055.

Michael Paine, City of Bellevue, Environmental Planning Manager, verified that the project is exempt from SEPA review for the following reasons.

"Based on the size of the water right claimed for Newcastle Beach Park (< 1 cubic foot per second), we agree that the action of building a pump station, pipe and intake structure is exempt from SEPA under 197-11-800 (4). Furthermore, this exemption covers SEPA for any additional shoreline, fisheries or building permits that may result."[3]

[3] Email correspondence from Michael Paine, City of Bellevue, Environmental Planning Manager to Don Hardy, Senior Planner, JD White a division of Berger/Abam Engineers Inc., dated July 31, 2008.

REFERENCED BIOLOGICAL EVALUATION
PROPOSED NEWCASTLE BEACH PARK IRRIGATION INTAKE
BELLEVUE, WASHINGTON

Prepared for:
City of Bellevue
Parks and Community Services Department
Contact: Rick Bailey
450 110th Ave. NE
PO Box 90012
Bellevue, Washington 98009
425.452.6031

November 2008

BERGER/ABAM
ENGINEERS INC.

1111 Main Street • Suite 300
Vancouver, Washington 98660
700 NE Multnomah Street • Suite 900
Portland, Oregon 97232
Phone: 360.823.6100/503.872.4100
Fax: 360.823.6101/503.872.4101

NEWCASTLE BEACH PARK IRRIGATION INTAKE

November 2008

Table of Contents

1.0 EXECUTIVE SUMMARY 1
2.0 PROJECT DESCRIPTION 2
2.1 Overview 2
2.2 Location 2
2.3 Action Area 2
2.4 SUMMARY OF REFERENCED PROJECT 5
3.0 PROPOSED PROJECT 5
3.1 Existing Conditions within Action Area 5
3.2 Proposed Action Details 6
3.3 Timing Restriction 7
4.0 LISTED SPECIES 8
4.1 Salmonids 8
4.2 Species Information and Site Use 8
5.0 BASELINE CONDITIONS 9
6.0 SPECIES IMPACTS 11
6.1 Direct Impacts 11
6.2 Indirect Impacts 12
6.3 Effect Determinations 12
7.0 CRITICAL HABITAT 13
8.0 ESSENTIAL FISH HABITAT 13
9.0 DETERMINATION OF EFFECT 13
10.0 REFERENCES 14

List of Tables

Table 1. In-water work window 8
Table 2. Listed species within project area 8
Table 3. Run timing within action area 9
Table 4. Checklist for documenting environmental baseline and effects of proposed action on relevant indicators 11
Table 5. Determination of effect 14

List of Figures

Figure 1. Vicinity Map.....3
Figure 2. Aerial View.....4

List of Appendices

Appendix A: Water Right Documentation

Appendix B: Kirkland Parks Irrigation Withdrawal Biological Evaluation

Appendix C: Civil Plans

1.0 EXECUTIVE SUMMARY

The purpose of this Referenced Biological Evaluation (BE) is to assess the potential effects of the installation and operation of an irrigation intake on species protected under the Endangered Species Act. The proposed project will involve the construction of a new water intake at Newcastle Beach Park in Bellevue, Washington (Figure 1).

Except for the specific locations of the activity and the amount of water that will be withdrawn, the proposed Newcastle Beach Park water withdrawal is identical to a similar water withdrawal project addressed by a BE completed in 2007 for a project by the City of Kirkland Parks and Community Services Department (the Kirkland Parks BE). The Kirkland Parks BE analyzed the effects of eight similarly designed irrigation withdrawal sites along Lake Washington, and determined that they would **not likely adversely affect**, Puget Sound Chinook salmon, Puget Sound steelhead, and Puget Sound bull trout. It also determined that the Kirkland Parks project **would not jeopardize** Puget Sound-Strait of Georgia coho salmon. Further, the Kirkland Parks BE determined that the project **would not adversely modify** the critical habitat of Puget Sound Chinook salmon or Coastal-Puget Sound bull trout. The Kirkland Parks BE also determined that the project **may affect, but would not likely adversely affect,** Essential Fish Habitat (EFH), as defined by the Magnuson-Stevens Act for Pacific Chinook or coho salmon.

Based on the similarities of the projects, we believe that the effects of the proposed Newcastle Beach Park water withdrawal project will be identical to those identified in the Kirkland Parks BE. The purpose of this referenced biological evaluation is to present the details of the proposed action and to reference the appropriate sections of the Kirkland Parks BE that document the potential for the proposed action to affect listed species, critical habitats, and documented EFH.

2.0 PROJECT DESCRIPTION

2.1 Overview

The City of Bellevue (City) Parks & Community Services Department (the department) modified its water right for Lake Washington water. In July 2007, the department asked to be allowed to change the point of diversion, place of use, and purpose of use for a portion of its existing water. The Washington State Department of Ecology (Ecology) approved the modification, allowing the diversion and use of up to 90 gallons per minute (GPM) between April 15 and October 31, with a total withdrawal not to exceed 10.1 acre-feet per year. This water will be used to irrigate the landscaped and maintained portions of 4.5-acre Newcastle Beach Park during the summer growing season. Appendix A contains documentation of the water right. Currently, the park is irrigated with water from the City's potable water system. To preserve that connection for potential future need, the hookup will be maintained.

To withdraw surface waters from Lake Washington, the applicant proposes to attach a water conveyance line and a screened water intake to an existing dock, allowing the water intake to be suspended above the lake floor.

2.2 Location

Newcastle Beach Park, the project site, is located at 4400 Lake Washington Boulevard SE on the east shore of Lake Washington, City of Bellevue, King County, within the SE Quarter of Section 17, T24N, R5E (Figure 1).

2.3 Action Area

Action area is defined as "all areas to be affected directly or indirectly by the proposed action and not merely the immediate area involved in the action." The disturbance effects of this project on Chinook salmon, bull trout, coho salmon (*O. kisutch*), and steelhead (*O. mykiss*) will be realized mostly in the area of the irrigation pipe intake itself. The potential exists for the disturbance of sand and silt on the bottom of Lake Washington that could result in minor, temporary changes in water quality in the immediate area of the intake installation. The extent of this temporary effect would depend on the level of turbidity produced and weather conditions, although based on water depths (10 feet) at the intake installation point, dispersal of silt would be minimal. In order to be assured that the action area would include all the area that could potentially be affected by the project, it was determined that the action area should include a 500-foot buffer from the point of the intake (Figure 2). No other areas will be affected directly or indirectly by the proposed actions.

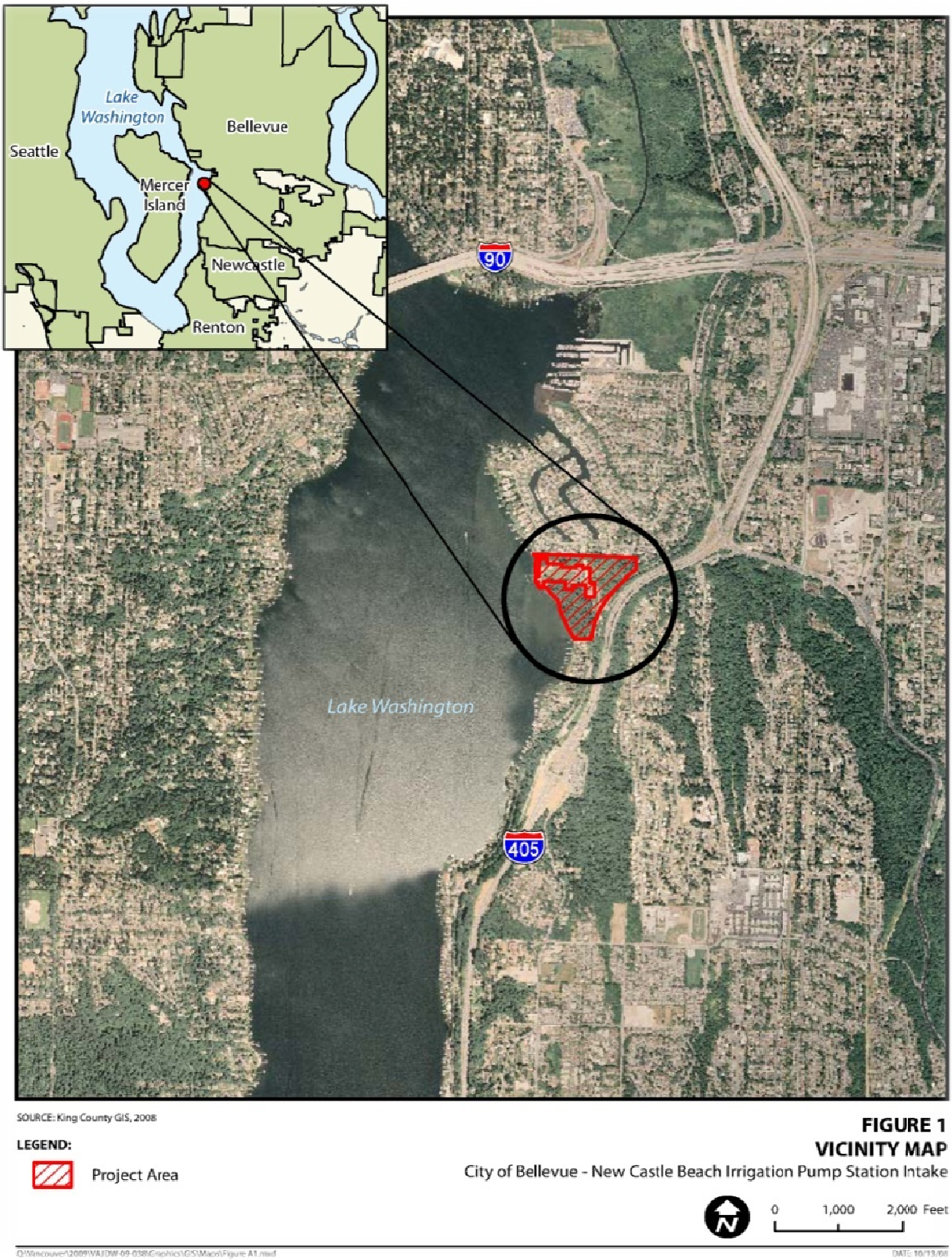

Figure 1. Vicinity Map

SOURCE: King County GIS, 2008

LEGEND:

- 500 foot Action Area
- Intake
- Pump
- 4" Intake pipe
- 1.5" Return pipe

FIGURE 2
ACTION AREA
City of Bellevue - New Castle Beach Irrigation Pump Station Intake

0 100 200 Feet

DATE: 10/13/08

2.4

2.5 SUMMARY OF REFERENCED PROJECT

This document references a BE prepared for the Kirkland Parks Lake Washington Irrigation Water Withdrawal Project (Kirkland Parks BE) by The Watershed Company (Watershed 2007, Appendix B). The Kirkland Parks project consisted of the construction and installation of eight separate irrigation intakes, all of which are located on the shores of Lake Washington. All of the proposed withdrawals resulted from the transfer of existing water rights and did not represent an overall increase in withdrawals from Lake Washington. The water withdrawn for the Kirkland Parks project was also used for the purpose of irrigating park property and eliminating or reducing the use of potable water for irrigation needs. Similar to the proposed project, all the Kirkland water intakes were designed in accordance with Washington Department of Fish and Wildlife (WDFW) water intake recommendations.

3.0 PROPOSED PROJECT

The following sections describe the existing conditions in the action area and the proposed project.

3.1 Existing Conditions within Action Area

Newcastle Beach Park is a public park with areas for swimming and sunbathing, a dock, changing rooms, restrooms, and lifeguard facilities. Parking is located in the eastern portion of the park. Vegetation in the park is highly maintained and is dominated by routinely mown lawn areas, scattered cherry trees, and rows of hybrid poplar trees. Photos of the project area are below.

The activities connected to the proposed water withdrawal will be carried out in the portion of the park south of the bathhouse and changing areas and close to the shoreline of Lake Washington. A concrete walkway from the parking area leads to a large asphalt area that surrounds the bathhouse.

Outside this asphalt pad, maintained lawn areas are the only vegetation. In this part of the park, the shoreline of the lake is formed by a steel sheet pile wall that extends approximately 5 feet above the ordinary high water mark (OHWM) of the lake. Also in this area, there is a wooden dock that extends into Lake Washington for approximately

140 feet, and then angles northward for a distance of approximately 130 feet. The dock is supported by timber piles.

3.2 Proposed Action Details

The project will install a new irrigation pump, three water lines extending from it, a water intake, and electrical control lines. Plans for the proposed irrigation pump, water lines, water intake, and electrical pump control line are attached as Appendix C. As shown on plan sheet I-1.0 (Appendix C), the approximate total area of disturbance is 3,300 square feet (SF). Disturbance will result from creating trenches for the water line and electrical wire installation and the construction of a concrete pad for the pump unit. The 3,300 SF of disturbance will be temporary, with soils anticipated to be exposed for no more than five days. The new impervious area will total the approximately 20 SF of the pump station pad. No long-term impacts are anticipated to result from the project.

3.2.1 Pump

The pump will be placed on a new 4- by 5-foot (approximately 20 SF) concrete pad to be located approximately 160 feet landward of the shoreline/OHWM (defined by the existing bulkhead in the project area) and approximately 50 feet south of the existing bathhouse (sheet I-1.0 "Floboy Pump Package"). The pad will be constructed using traditional form and pour techniques. This pad is the only new impervious area associated with the project.

3.2.2 Water Lines

The new 3-inch PVC water intake supply line, 1½-inch PVC intake cleaning supply line, and 2-inch PVC overflow pipe will be installed in the locations shown in I-1.0 of the attached plan set. The lines will be buried approximately 24 inches below the existing ground surface using common mechanical trenching machinery. The water lines will extend west from the pump station and pass under the asphalt pad via an existing 8-inch utility sleeve. The lines will pass through the existing bulkhead by way of a new 8-inch corrugated metal sleeve that will be installed in the bulkhead.

Once through the bulkhead, the waterlines will be attached to the south side of the existing dock, slightly above the water level (Sheet I-1.0), using U-shaped steel brackets. In-water work will not be required for this portion of the project because the waterlines can be installed from the surface of the dock.

3.2.3 Electrical Control Lines

Electrical controls for the pump will be located in an existing mechanical room within the bathhouse, with electrical lines extending below ground to the pump at a depth of approximately 36 inches.

3.2.4 Intake

The irrigation line will be connected to a Yardney self-cleaning water intake (model CW 200) which will be equipped with a fish screen consistent with applicable WDFW

requirements.[1] Based on the anticipated water withdrawal (90 GPM) and the surface area of the intake screen (3.84 SF), the intake velocity through the fish screen will be 0.05 feet per second (fps). This velocity is well below the velocity of 0.4 fps recommended by WDFW.

The intake will be mounted underneath the existing dock approximately 140 feet waterward from the bulkhead. The intake will be positioned parallel with the lake bottom in a location with a water depth of approximately 10 feet. This is the deepest portion of the lake that can be reached from the main dock. No portion of the intake will be closer than 18 inches from the lakebed. Divers with scuba gear will install the intake and associated piping. To avoid siltation, they will be careful not to disturb the lake bottom when they install the intake.

3.2.5 Best Management Practices

Parks will coordinate with Ecology and WDFW as the Hydraulic Project Approval and general authorization under Section 10 of the Endangered Species Act are being processed. The following best management practices (BMPs) were incorporated as stipulations in the design:

- Pump intake will be screened to prevent entry of adult and juvenile fish.
- Screened intake will consist of a facility with enough surface area to ensure that the velocity through the screen is less than 0.4 fps.
- Screen will be maintained to prevent the injury or entrapment of fish.
- Water intake will be located at least 18 inches above the bottom of the lake
- Piping will be attached alongside the existing dock and extend approximately 140 feet from the shoreline.
- The pump will be located approximately 160 feet upland from the existing bulkhead.

Appendix C includes the plans for the proposed project and information about the intake screen and pump location.

3.3 Timing Restriction

Installing the pump, the intake piping, and screen and constructing the pad likely will require approximately 5 days. Construction will begin as soon as permits and scheduling allow, but in-water work will occur only from July 15 to July 31 or November 16 to December 31, as directed by the combined fish protection policies of National Marine Fisheries Service (NMFS), US Fish and Wildlife Service (USFWS), and WDFW in Lake Washington (Table 1).

[1] Please see attached Yardney Water Management Systems product specification sheet (Appendix C).

Table 1. In-water work window

	Jan	Feb	Mar	Apr	May	Jun	Jul	Aug	Sep	Oct	Nov	Dec
In-Water Work Window							July 15–31				Nov 16–Dec 31	

4.0 LISTED SPECIES

In order to determine their presence within the project area, in November 2008, the project team queried the USFWS database about listed species in Washington (http://www.fws.gov/westwafwo/speciesmap/KING.html. The team also queried the NMFS database for current species listing (http://www.nwr.noaa.gov/ESA-Salmon-Listings/upload/snapshot0208.pdf, November, 2008). Lastly, priority habitat and species maps from WDFW were obtained for the project area (October 10, 2008).

4.1 Salmonids

Newcastle Beach Park is located along the shoreline of Lake Washington, within the geographic range of three federally listed species of salmonids: 1) Chinook salmon of the Puget Sound Evolutionary Significant Unit (ESU);[2] 2) bull trout of the Coastal-Puget Sound Distinct Population Segment (DPS);[3] and 3) steelhead of the Puget Sound DPS.[4] Coho salmon of the Puget Sound-Strait of Georgia ESU are also present in the watershed and are currently considered a Species of Concern, indicating that they are under less active consideration for formal listing.[5]

The project area is also located within critical habitat that has been formally designated for Puget Sound Chinook salmon and Coastal-Puget Sound bull trout. Critical habitat for Chinook salmon includes the Lake Washington subbasin (Watershed Code 17110012-03) of the Puget Sound ESU, and critical habitat for bull trout of the Coastal-Puget Sound DPS includes Lake Washington, which is Critical Habitat Unit 28 – Puget Sound. Listed species in the project area are enumerated in Table 2.

Table 2. Listed species within project area

Species	Listing		
	Threatened	Endangered	Species of Concern
Chinook Salmon	X		
Bull Trout	X		
Steelhead	X		
Coho			X

4.2 Species Information and Site Use

The Kirkland Park BE (Appendix B) presents species-specific information for ESA-listed fish species identified as potentially present within the project area. Table 3 below

[2] Reaffirmed as Threatened, US Federal Register, 28, June 2005).

[3] Threatened, US Federal Register 1, November 1999.

[4] US Federal Register, 29 March 2006.

[5] US Federal Register, 15 April 2004.

summarizes the run timing for these species within the action area, based on the information contained in the Kirkland Park BE. The months when a species has the potential to be present in the action area are shaded in the table.

Table 3. Run timing within action area

	Jan	Feb	Mar	Apr	May	Jun	Jul	Aug	Sep	Oct	Nov	Dec
Species	**Run timing within Action Area**											
Puget Sound Chinook Salmon												
Coastal-Puget Sound Bull Trout	Presence highly unlikely throughout the year											
Puget Sound Steelhead												
Puget Sound-Strait of Georgia Coho Salmon												
In-Water Work Window							July 15–31				Nov 16–Dec 31	

5.0 BASELINE CONDITIONS

The baseline habitat conditions for ESA-listed fish species within the Lake Washington watershed are described in the Special Public Notice and the Salmon and Steelhead Habitat Limiting Factors Report for WRIA 8.[6] This referenced BE focuses on the site-specific attributes of the action area and on any of its conditions that vary from Lake Washington as a whole. BERGER/ABAM scientists visited the site on August 21, 2008 to observe and record its conditions.

Most of the action area is maintained as regularly mowed lawn areas and facilities for public access and use of the park as described in section 2.5 above.

A department maintenance crew visits once a week to mow, edge, blow, and weed the turf and landscape beds within the park. Typically, the department applies mulch to the landscape beds every other year and the turf is aerated and overseeded twice a year. The beach sand is groomed three times each year and about 60 tons of new sand is imported to the beach every other year.

The department applies turf fertilizer in the park three times a year (spring, summer, fall), but maintains a no-chemical/no-fertilizer buffer extending 100 feet from the

[6] US Army Corps of Engineers, Special Public Notice: Endangered Species Act Guidance for New and Replacement Piers and Bulkheads in Lake Washington, Lake Sammamish, and the Ship Canal, including Lake Union, 2001

J. Kerwin, Salmon and steelhead habitat limiting factors report for the Cedar-Sammamish basin, Washington Conservation Commission, 2001.

shoreline. The formulation and quantity of the fertilizer vary based on the actual nutrient needs of the turf at time of application.

Much of the weed eradication in the park is accomplished manually. However, the department also uses herbicides in the park, but, as with fertilizer, does not use herbicide within 100 feet of the shoreline. Herbicides are applied to the rest of the park as needed rather than on a schedule, and the herbicides used are primarily Roundup (EPA#: 524-475) and Crossbow (EPA#: 62719-260).

The boundary of the aquatic environment within the action area is defined by a steel sheet pile wall and a sandy beach area. The elevation of the OHWM within the action area has been established at slightly above 15 feet (sheet I-1.0, Appendix C). From this point, the lake bottom gradually slopes downward to an elevation of approximately 4 feet at the location of the end of the existing dock. From this point west, the shoreline continues to slope downward and water depths increase.

At the location of the intake, substrate is dominated by sand and the water depth is approximately 10 feet. Vegetation is mostly limited to Eurasian watermilifoil with coverage amounts estimated from underwater photographs of the site at around 40%.

In order to assess whether the project will affect baseline conditions within the action area, BERGER/ABAM scientists completed the NMFS checklist for documenting environmental baseline conditions and effects of proposed action on relevant indicators, and it is presented as Table 4 below.

Table 4. Checklist for documenting environmental baseline and effects of proposed action on relevant indicators – draft modified by NMFS for lakes

Pathways	Environmental Baseline			Effects of the Actions		
Indicators	Properly Functioning	At Risk	Not Properly Functioning	Restore	Maintain	Degrade
Water Quality						
Temperature/ Dissolved Oxygen		X			X	
pH		X			X	
Chemical Contamination		X			X	
Nutrients/Total P		X			X	
Habitat Access						
Physical Barriers		X			X	
Habitat Elements						
Exotic Species (In-water)			X		X	
Shoreline Upwelling/ Downwelling			X		X	
Structural Complexity		X			X	
Substrate Composition			X		X	
Shoreline Conditions						
Shoreline Vegetation and Riparian Structure			X		X	
Shoreline Gradient			X		X	

Notes:

"Restore" means to change the function of an "at risk" indicator to "properly functioning," or to change the function of a "not properly functioning" indicator to "at risk" or "properly functioning" (i.e., it does not apply to "properly functioning" indicators).

"Maintain" means that the function of an indicator does not change (i.e., it applies to all indicators regardless of function level).

"Degrade" means to change the function of an indicator for the worse (i.e., it applies to all indicators regardless of function level). In some cases, a "not properly functioning" indicator may be further worsened, and this should be noted.

6.0 SPECIES IMPACTS

This section discusses the potential effects of the project on the action area and on ESA-listed species.

6.1 Direct Impacts

The effects of the installation and operation of the proposed water intake on the overall conditions of the action area and Lake Washington in general are summarized in Table 4 above. Please refer to the Kirkland Parks BE in Appendix B for a detailed analysis of potential direct effects to ESA-listed species. These direct effects are summarized here.

Consistent with the findings of the Kirkland BE, it is anticipated that the proposed action will have only minimal direct effects to ESA-listed species. Direct effects to salmonids that may be present within the action area will be limited to:

- Water Quality: The proposed action may result in a temporary increase in turbid runoff during installation of pumps and intake lines. Installing the concrete pad and electrical lines could result in a small amount of turbid runoff from upland, although the potential for this to occur will be minimal because of the BMPs that will be employed (see section 3.2.5). Operation of the water withdrawal system would not result in disturbance to substrate or any turbid runoff from upland areas.

- Habitat Health (Vegetated Shallows): During the installation of the water intake, the vegetated shallows within the immediate area of the intake could be disturbed by the project divers. Disturbance from the installation would be limited to divers walking or standing on the lakebed in order to facilitate installation and inspection of the intake unit. This form of disturbance would not affect the health of vegetated shallows or its effect would be discountable.

- Direct Mortality: The potential for direct mortality to listed species within the action area exists when they are present during the installation or operation of the water intake. Their exposure will be minimized by installing the intake during the in-water work window specified by WDFW. Direct mortality during the operation of the intake will be prevented because of the design of the intake screen which will have maximum intake velocities well below the WDFW-recommended 0.4 fps.

These effects will not significantly affect water quality or habitat health, nor will they result in any direct take of listed species.

6.2 Indirect Impacts

The proposed project will not affect the habitat of listed species within the action area negatively. Consistent with the findings of the Kirkland BE, no alteration of refuge, foraging, or migration conditions for listed species is expected. Operating the proposed water intake will not change with the water level of Lake Washington because the withdrawals do not represent an enlargement of an existing water right.

6.3 Effect Determinations

Using BMPs and following the intake screening guidelines will minimize the collective effect of the project to the maximum extent practicable. Operating the water intake will alter the location of the withdrawal of the water, but will not result in a net increase in the amount of water withdrawn from the lake. Lastly, the restrictions on the timing of the water withdrawal will minimize the potential for impacts to listed species that might result from the operation of the water intake. Therefore, the effect determinations for the proposed action are:

- **May affect, not likely to adversely affect, Puget Sound Chinook salmon;**
- **May affect, not likely to adversely affect, Puget Sound steelhead;**
- **May affect, not likely to adversely affect, Coastal-Puget Sound bull trout; and**
- **Will not jeopardize Puget Sound-Strait of Georgia coho salmon.**

7.0 CRITICAL HABITAT

Activities related to the project will occur within designated critical habitat for Puget Sound Chinook salmon and critical habitat subunit for bull trout.

The primary constituent elements for Chinook and bull trout critical habitats listed in the Kirkland Parks BE were reviewed in order to determine if all current constituent elements were addressed. The primary constituent elements addressed for both species by the Kirkland Parks BE have not changed.

Based on the similarities of the proposed project and the analysis of effects in the Kirkland Parks BE, the proposed project:

- **Would not adversely modify the critical habitat of the Puget Sound Chinook salmon**
- **Would not adversely modify the critical habitat of the Coastal-Puget Sound bull trout**

8.0 ESSENTIAL FISH HABITAT

The proposed project will occur within Lake Washington Hydrologic Unit which has Essential Fish Habitat (EFH) designations for Chinook or coho salmon. Because of the project details, the effects determination included in this referenced BE, and the information in the Kirkland Parks BE (Appendix B), the project team determined that the project would not negatively affect individual listed species or their critical habitats.

Through the implementation of construction BMPs and design elements that are in accordance with WDFW recommendations, the project:

- **May affect, not likely to adversely affect Pacific Chinook EFH.**
- **May affect, not likely to adversely affect Puget Sound-Strait of Georgia coho salmon EFH.**

9.0 DETERMINATION OF EFFECT

Table 5. shows the determinations of effect for the listed species within the action area resulting from the information presented above.

Table 5. Determination of effect

Species	Overall Project Effect	Effect on Critical Habitat	Effect on EFH
Puget Sound Chinook Salmon	May affect, not likely to adversely affect	Would not adversely modify	May affect, not likely to adversely affect
Coastal-Puget Sound Bull Trout	May affect, not likely to adversely affect	Would not adversely modify	N/A
Puget Sound-Strait of Georgia Coho Salmon	Not likely to jeopardize	N/A	May affect, not likely to adversely affect
Puget Sound Steelhead	May affect, not likely to adversely affect	N/A	N/A

10.0 REFERENCES

J. Kerwin. 2001. Salmon and steelhead habitat limiting factors report for the Cedar-Sammamish basin, Washington Conservation Commission.

The Watershed Company, 2007. Draft Biological Evaluation for sensitive fish and wildlife species at the proposed Lake Washington irrigation withdrawal sites, City of Kirkland Parks, WA: NWS-2007-431-NO. June 18, 2007.

US Army Corps of Engineers, NOAA Fisheries, and US Fish and Wildlife Service. 2001. special public notice: Endangered Species Act guidance for new and replacement piers and bulkheads in Lake Washington, Lake Sammamish, and the Ship Canal, including Lake Union. 2001.

Appendix A:
Water Rights Documentation

STATE OF WASHINGTON
DEPARTMENT OF ECOLOGY

COPY

REPORT OF EXAMINATION FOR CHANGE TO A PORTION OF A WATER RIGHT CLAIM

TO APPROPRIATE PUBLIC WATERS OF THE STATE OF WASHINGTON

☒ Surface Water (Issued in accordance with the provisions of Chapter 117, Laws of Washington for 1917, and amendments thereto, and the rules and regulations of the Department of Ecology.)

☐ Ground Water (Issued in accordance with the provisions of Chapter 263, Laws of Washington for 1945, and amendments thereto, and the rules and regulations of the Department of Ecology.)

PRIORITY DATE	APPLICATION NUMBER	PERMIT NUMBER	CLAIM NUMBER
1888			158498

THIS CHANGE AUTHORIZATION SPLITS OFF A PORTION OF THE SUBJECT WATER RIGHT CLAIM. THE PORTION OF THE WATER RIGHT CLAIM SPLIT OFF BECAUSE OF THIS CHANGE WILL BE TRACKED AS CG1-158498CL@45 AND WILL BE REFERRED TO AS RECORD AU

RECORD AU

NAME
City of Bellevue

ADDRESS (STREET)	(CITY)	(STATE)	(ZIP CODE)
16023 NE 8th Street (P.O. Box 90012)	Bellevue	Washington	98009-9012

PUBLIC WATERS TO BE APPROPRIATED

SOURCE
Lake Washington

TRIBUTARY OF (IF SURFACE WATERS)

MAXIMUM CUBIC FEET PER SECOND (CFS)	MAXIMUM GALLONS PER MINUTE (GPM)	MAXIMUM ACRE FEET PER YEAR (AFY)
0.201	90*	10.1

QUANTITY, TYPE OF USE, PERIOD OF USE

Irrigation of 4.5 acres – during irrigation season (April 15 through October 31)
Diverting 90 gallons per minute, from the lake under this water right record, can only occur between 11:00 p. m. and 2:59 a.m. DAILY, during the irrigation season. **However**, only 82.6 gallons per minute will be available from 2:00 a.m. – 2:59 a.m. on EVEN numbered days.
The total gallons of water per year allowed to be used under this change are 3,291,086 gallons.

LOCATION OF DIVERSION/WITHDRAWAL

APPROXIMATE LOCATION OF DIVERSION--WITHDRAWAL
Approximately feet and feet from the corner of Section 17, T24N, R5E, W.M.

LOCATED WITHIN (SMALLEST LEGAL SUBDIVISION)	SECTION	TOWNSHIP N.	RANGE, (E. OR W.) W.M.	W.R.I.A.	COUNTY
N ½ SE ¼	17	24N	5E	8	King

RECORDED PLATTED PROPERTY

LOT	BLOCK	OF (GIVE NAME OF PLAT OR ADDITION)
		Newcastle Beach Park

LEGAL DESCRIPTION OF PROPERTY ON WHICH WATER IS TO BE USED

King County Tax Parcel Number 1724059038 (7.07 acres) located in the N ½ SE ¼, Section 17, T24N, R5E, W.M. The following map shows the approximate location of Parcel Number 1724059038. Attachment 1 shows the point of diversion and place of use.

Table 1. Summary of Water Right Documents Currently Relating to Water Right Claim 158498

WATER RIGHT TRACKING NUMBER	OWNER	QI (GPM)	QA (AFY)	DOCUMENT TYPE* (Report of Examination or Certificate of Change)
Original 158498 before any changes	KCWD NO. 1	293.6 (tentative determination)	473.6 (tentative determination)	
158498B	ROBERT AND KATHLEEN TRIMBLE	19	0.7	ROE
158498C	CARL STORK	36	1.3	ROE
158498D	CITY OF KIRKLAND	142	41.8	CERTIFICATE OF CHANGE
158498E	THOMAS J. MILLER	14	0.7	ROE
158498F	DAN NORDSTROM	18	1.3	ROE
158498G	SGT, LLC	20	1.0	ROE
158498H	GARY W. SERGEANT	20	1.4	ROE
158498I	CKK	19	0.7	ROE
158498J	FLEMING	24	1.0	ROE
158498K	TRIMBLE	13	0.4	ROE
158498L	THOMPSON	70	4.0	ROE
158498M	BRUCE JONES	20	0.73	ROE
158498N	GARY JONES	18	1.0	ROE
158498O	BETH POST	18	1.0	ROE
158498P	WILMA HAGEN	15	0.6	ROE
158498Q	RPW PARTNERSHIP	15	0.6	ROE
158498R	ROSS REVOCABLE TRUST	15	0.6	ROE
158498S	DORIS J. HART	15	0.27	ROE
158498T	ROBERT F. ABRAMSON, JR.	14	0.5	ROE
158498U	JAN & PRICILLA BREKKE RESIDENCE TRUST	19	2.8	ROE
158498V	ROBERT D. BISHOP	16	1.3	ROE
158498W	CASCADE TRUST, ELLEN CONEDERA DIAL, TRUSTEE	32.6	6.0	ROE
158498X	WILLIAM HUNT	10	0.4	ROE
158498Y	WILLIAM & GERI FRANTZ	18	1.0	ROE
158498Z	WILLIAM & GERI FRANTZ	19	1.4	ROE
158498AA	ELIZABETH FREEMAN	14	0.5	ROE
158498AB	CHARLES WALLACE	15	0.3	ROE
158498AC	SEATTLE YACHT CLUB	20	1.8	ROE
158498AD	WILLIAM BOETTCHER	18	1.0	ROE
158498AE	MAX A. GURVICH	18	0.3	ROE
158498AF	SCHIRO REVOCABLE TRUST	27	1.5	ROE
158498AG	SCHIRO REVOCABLE TRUST	22	2.0	ROE
158498AH	CITY OF MERCER ISLAND (PARKS & REC. DEPT)	40	4.5	ROE
158498AI	RALPH AND KATHARINE BRINDLEY	17	0.6	ROE
158498AJ	OKI DEVELOPMENT	16	0.9	ROE
158498AK	OKI DEVELOPMENT	27	3.0	ROE
158498AL	RODNEY, JANICE OLSON	22	1.2	ROE

158498AM	P.A. HASHISAKI	14	0.5	ROE
158498AN	STEVEN SIMON	13.6	0.5	ROE
158498AO	DOUGLAS GAMBLE	25	1.0	ROE
158498AP	JAMES AND ELIZABETH REID	18	0.7	ROE
158498AQ	PETER AND JULIEANN BRAMAN	18	0.3	ROE
158498AR	JOHN TORODE	14	1.0	ROE
158498AS	RICK, JACQUE DOANE	18	1.0	ROE
158498AT	JASON SANDMAIER	22	1.2	ROE
158498AU	CITY OF BELLEVUE	90	10.1	ROE

* The instantaneous and annual rates given for Report of Examination documents are the maximum authorized; the values given for certificates of change are the values that have actually been reperfected after the change.

Table 2. Managing the Instantaneous Diversion Rate from Lake Washington Under Water Right Claim 158498

	Water Right Record with individual diversion rates in gpm in () and combined rate in gpm			
ODD DAYS				
Time	January 1 – April 14	April 15 – October 31	November 1 – December 31	Comments
12:00 – 12:59 am	0	D(142), **AU(90),** 232	0	
1:00 – 1:59 am	0	D(142), **AU(90),** 232	0	
2:00 – 2:59 am	0	B(19), C(36), D(142), E(14), **AU(90),** 301	0	
3:00 – 3:59 am	0	B(19), C(36), D(142), E(14), W(32.6), 243.6	0	
4:00 – 4:59 am	0	D(142), E(14), W(32.6), AR(14), 202.6	0	
5:00 – 5:59 am	0	D(142), E(14), W(32.6), AG(22), AN(13.6), AR(14), 238.2	0	
6:00 – 6:59 am	0	D(142), W(32.6), AD (18), AG(22), AJ(16), AN(13.6), AR(14), 258.2	0	
7:00 – 7:59 am	0	N(18),AD (18), AG(22), AJ(16), AR(14), AT(22), 110	0	
8:00 – 8:59 am	0	G(20), K(13), N(18), AD (18), AG(22), AJ(16), AK(27), AM(14), AO(25), AP(18), AS (18), AT(22), 231	0	
9:00 – 9:59 am	0	G(20), K(13), N(18), Q(15),X(10), AG(22), AK(27), AL(22), AM(14, AO(25), AP(18), AQ(18), AS (18), AT(22), 262	0	
10:00 – 10:59 am	0	G(20), O(18), Q(15), X(10), AF(27), AK(27), AL(22), AO(25), AS (18), 182	0	
11:00 – 11:59 am	0	O(18), AF(27), AK(27), AL(22), 94	0	
12:00 – 12:59 pm	0	O(18), AF(27), AK(27), 72	0	
1:00 – 1:59 pm	0	AK(27), 27	0	
2:00 – 2:59 pm	0	0	0	
3:00 – 3:59 pm	0	0	0	
4:00 – 4:59 pm	0	0	0	
5:00 – 5:59 pm	0	0	0	
6:00 – 6:59 pm	0	R(15), W(32.6), 47.6	0	
7:00 – 7:59 pm	0	R(15), W(32.6), 47.6	0	
8:00 – 8:59 pm	0	W(32.6), 32.6	0	
9:00 – 9:59 pm	0	W(32.6), 32.6	0	
10:00 – 10:59 pm	0	W(32.6), 32.6	0	
11:00 – 11:59 pm	0	D(142), W(32.6), **AU(90),** 264.6	0	

EVEN DAYS				
Time	January 1 – April 14	April 15 – October 31	November 1 – December 31	Comments
12:00 – 12:59 am	0	D(142), AH(40), **AU(90),** 272	0	
1:00 – 1:59 am	0	D(142), AH(40), **AU(90),** 272	0	
2:00 – 2:59 am	0	D(142), AC(20), AH(40), **AU(82.6),** 156.6	0	
3:00 – 3:59 am	0	D(142), AC(20), AH(40), 202	0	
4:00 – 4:59 am	0	D(142), F(18), Y(18), Z(19), AC(20), AH(40), 257	0	
5:00 – 5:59 am	0	D(142), F(18), Y(18), Z (19), AC(20), AH(40), 257	0	
6:00 – 6:59 am	0	D(142), F(18), P(15), T(14), Y(18), Z(19), AC(20), AI(17), 263	0	
7:00 – 7:59 am	0	F(18), L(70), P(15), T(14), V (16,) Y(18), Z(19), AB(15), AC(20), AI(17), 222	0	
8:00 – 8:59 am	0	H(20), I(19) J(24), L(70), M(20), V(16), 169	0	
9:00 – 9:59 am	0	H(20), I(19) J(24), L(70), M(20), V(16), 169	0	
10:00 – 10:59 am	0	H(20), U(19), V(16), AE(18),73	0	
11:00 – 11:59 am	0	H(20), U(19), 39	0	
12:00 – 12:59 pm	0	U(19), 19	0	
1:00 – 1:59 pm	0	U(19), 19	0	
2:00 – 2:59 pm	0	U(19), 19	0	
3:00 – 3:59 pm	0	U(19), 19	0	
4:00 – 4:59 pm	0	U(19), AA(14), 33	0	
5:00 – 5:59 pm	0	U(19), AA(14), 33	0	
6:00 – 6:59 pm	0	S(15), 15	0	
7:00 – 7:59 pm	0	0	0	
8:00 – 8:59 pm	0	0	0	
9:00 – 9:59 pm	0	0	0	
10:00 – 10:59 pm	0	0	0	
11:00 – 11:59 pm	0	D(142), **AU(90),** 232	0	
*****No time period may exceed 293.6 gpm*****				

DESCRIPTION OF PROPOSED WORKS

The water supply system will consist of a screened intake pipe, located off the dock in Lake Washington, a pump, a meter, an irrigation control system and irrigation piping. The system will be installed and inspected by a professional irrigation specialist and comply with the requirements of this report of examination and the requirements of the Department of Fish and Wildlife.

DEVELOPMENT SCHEDULE

BEGIN PROJECT BY THIS DATE:	COMPLETE PROJECT BY THIS DATE:	WATER PUT TO FULL USE BY THIS DATE:
X ~~Started~~ April 1, 2008	April 1, ~~2008~~ 2009	December 1, 2013

REPORT

BACKGROUND INFORMATION

On May 16, 1974, the Department of Ecology received a water right claim form from the King County Water District No. 1 signed by John R. Adams on May 12, 1974. This water right claim was assigned number 158498 by Ecology. The details of the information attested to on the water right claim form are contained in the section below.

On June 6, 2007, the Department of Ecology accepted a change application from the City of Bellevue on water right claim 158498. Ecology assigned this change application the tracking number CG1-158498CL@45.

Attributes of the Original Claim

Name on Claim:	King County Water District No. 1
Priority Date:	1888
Quantity Claimed	

Instantaneous Quantity:	900 gallons per minute (gpm)
Annual Quantity:	1440 acre-feet per year (afy)
Quantity Presently Used	
Instantaneous Quantity:	250 gallons per minute (gpm)
Annual Quantity:	400 acre-feet per year (afy)
Point of Withdrawal:	NW¼, Section 17, Township 25 North, Range 5 East, W.M.
Purpose of Use:	Municipal Supply
Period of Use:	Continuously
Place of Use:	Replat of Yarrow Section 18, Township 25 North, Range 5 E. W. M.

Proposed Change Made to a Portion of the Water Right Claim

Name of Applicant:	City of Bellevue
Date of Application for Change:	June 6, 2007
Point of Diversion:	N ½ SE ¼ Section 17, Township 24 North, Range 5 East, W.M.
Purpose of Use:	Irrigation
Period of Use:	During the Irrigation Season (April 15 through October 31)
Place of Use:	King County Tax Parcel No. 1724059038 (Newcastle Beach park) in the N ½ SE ¼, Section 17, Township 24 North, Range 5 East, W.M.
Notice of Publication:	_____ on and , 2006
Protests:	None received during the statutory 30-day protest period.

Purpose of the Change Application

King County Water District No. 1 (WADOH Water System Id. 38650) has entered into an interlocal agreement with the City of Bellevue under which the City has assumed the District's water system and service area and the District will eventually dissolve. The District must sell it assets, including water rights, to pay the costs of upgrading the water system and interconnecting with the City of Bellevue's water system. The property that contained the original points of withdrawal for this water right claim was sold to the City of Kirkland, minus the water right. The District has adopted a resolution offering to sell shares of its water rights to its existing residents and, to the extent of availability, to other lakefront property owners for irrigation of lawns and gardens.

INVESTIGATION

In considering this application, my investigation included, but was not limited to research and/or review of:

- The State Water Code
- The State Environmental Policy Act (SEPA)
- Washington State Department of Fish and Wildlife Comments
- Existing water rights on file for King County Water District No. 1 and the applicants property
- Notes from site visits on January 13, 2006, February 23, 2006, and .
- Correspondence from Thomas M. Pors (attorney for King County Water District No. 1), and Robert Trimble (current president of the board for King County Water District No. 1).
- Topographic maps, local area maps, and aerial photos
- Report of Hydrogeologic Services, Hydrogeologic Assessment, King County Water District No. 1 Well Field, Kirkland, Washington (GeoEngineers, November 7, 1995)
- Report, Wellhead Protection Study, Kirkland Well Field (GeoEngineers, March 3, 2000)
- Hydrologic Report for Change Applications Relating to the Transfer of Water Originally Withdrawn Under Ground Water Claim 158498 and Being Changed to Points of Diversion out of Lake Washington for Irrigation (Andrew B. Dunn, January 23, 2006)
- State of Washington Irrigation Guide, 1985, amended 1990 and 1992.
- Guidance 1210, Department of Ecology - Water Resources Program, Effective Date 10/11/2005.
- *A Point in Time, A History of Yarrow Point, Washington* (by the citizens of Yarrow Point, 2002)
- *Yarrow a Place, An Historical Commentary of Lives and Times During the Early Development of Yarrow Point* (Jeanne L. Whiting, 1976)

State Water Code

Chapters 90.03, 90.14, and 90.44 RCW authorize the appropriation of public water for beneficial use and describe the process for obtaining water rights including the process to amend or change existing rights. Laws specifically governing the water right permitting process are RCW 90.03.250 through 90.03.340 and RCW 90.44.060. Changes or amendments to these rights are covered primarily under RCW 90.03.380 and RCW 90.44.100.

State Environmental Policy Act (SEPA)

This water right change application is categorically exempt under SEPA WAC 197-11-305 and WAC 197-11-800(4).

Washington Department of Fish and Wildlife Comments

August 8, 2005, the Department of Ecology received a letter from the WDFW stating that, "Lake Washington is inhabited by sockeye, Chinook, coho, steelhead, cutthroat, and numerous native and non-native fish species." It also requested that this water right should be subject to established lake levels, if any. The new water right holder would need to obtain a Hydraulic Project Approval (HPA) from the Washington State Department of Fish and Wildlife for work performed in or near the water and during that process they would require them to screen their intake structure. This letter received from WDFW was designed to apply to all change applications of this nature for water right claim 158498.

Existing Rights for the Applicant

No water right documents were identified on the Newcastle Beach Park property prior to this water change.

Other Water Rights in the Vicinity

The identification of nearby water rights is undertaken so that the hydrogeologist/report writer is aware of those nearby water rights when determining if the new point of diversion will impair any of those rights. Due to the size of Lake Washington, and the pumping rate of the proposed diversion, it was deemed unnecessary to identify other water rights in the vicinity since this pumping rate will not cause a measurable change in the water level of Lake Washington and can therefore automatically be determined that it will not cause impairment.

Site Visit

On , I met with

Topographic and Local Area Maps

The Kirkland USGS 1:24,000 scale topographic map and the King County Assessor's maps and aerial photos, accessed through their iMap website (http://www.metrokc.gov/gis/mapportal/iMAP_main.htm#) were used during this investigation.

Tentative Determination as to Extent and Validity of Water Right Claim 158498

A Tentative Determination Analysis for the original water right claim, prior to any portion of the water right claim being sold off, is attached to this report (see Attachment 2). It concluded that 293.6 gpm and 473.6 acre-feet per year were perfected for year round municipal use and no portion of that was lost due to statutory relinquishment or common law abandonment.

Annual Quantity Determination

The City of Bellevue plans on irrigating turf (4.0 acres) and landscape plants (0.5 acres) on a total of 4.5 acres. The State of Washington Irrigation Guide (1992 update) calculates the crop irrigation requirement, with a 2-year return interval (every other year the crop will experience a shortage of water), for pasture/turf at the Seattle-Tacoma station as being 20.02 inches per year. In this guide, the irrigation of pasture/turf runs from April through September.

$$TIR = \frac{CIR}{E} * 100$$

TIR – Total Irrigation Requirement
CIR – Crop Irrigation Requirement
E – Irrigation System Efficiency in percent

For Pop-up impact sprinklers, estimates for efficiency are 60-85% with 75% being the average (Ecology Water Resources Program Guidance 1210). An efficiency of 75% was assumed for this calculation.

$$TIR = \frac{20.02 \text{ inches}}{75} * 100$$

TIR = 26.69 inches

On the website for the Irrigation Water Management Society (http://www.iwms.org/seattle_area.asp), it estimates that the amount of water needed for landscape plant irrigation is approximately 70% of that required for turf. Taking 70% of 26.69 inches equates to a total irrigation requirement of 18.68 inches for the landscape plant acreage.

Turf: Using a TIR of 26.69 inches, the volume pumped to irrigate 4.0 acres of turf is calculated as 8.88 afy.

Landscape Plants: The volume of water needed to irrigate 0.5 acres with a TIR of 18.68 inches is calculated as 0.775 afy.

Total Irrigation: The calculated irrigation requirement for the entire 4.5 acres of irrigation is 9.655 afy. The applicant purchased 10.1 afy from King County Water District # 1 for irrigation. The requested 10.1 afy for irrigation of turf and landscape plants is based solely on the instantaneous pumping rate and duration of pumping utilized by the system.

Final Acre-Feet Per Year: The applicant proposed to irrigate from April 15 to October 31 daily during irrigation season. The annual quantity of 10.1 afy, and the limitations on the pumping rate, days, and hours of pumping will not allow for more than 10.1 afy to be pumped. The final acre feet assigned the final Certificate of Change to G1-158498CL@45 will be the actual number of afy that have been perfected by the applicant (this final annual quantity may be less than what was requested). This final annual quantity will be based upon meter readings and will take into account any limitations on the pumping rate, and days and hours of pumping. All unperfected quantities will be returned to the state.

Irrigation Season Determination

The applicant requested an irrigation season of April 15th through October 31st. This time period brackets the dates when a water right for irrigation purposes can be exercised. In looking at the Seattle-Tacoma and Seattle U of W stations in the State of Washington Irrigation Guide (1985 and 1992), the period of time during which irrigation is required to satisfy the CIR for a variety of crops starts in April and runs into October. Given the weather conditions in the Seattle area, it is not likely that an irrigator will have to irrigate over this entire duration in a typical year. However, the proposed irrigation season of April 15th through October 31st seems reasonable to set the outer bounds on the irrigation season and account for possible needs during drought years.

A graph of historic water use (http://www.seattle.gov/util/About_SPU/Water_System/Water_Supply/COS_004041.asp) by Seattle Public Utilities was analyzed to determine when water use occurs for irrigation, which should be represented as an increase in use compared with background winter-time in-house domestic use. This analysis suggests that the proposed irrigation season will capture the observed high water use period.

Given the management scheme that has been set up for the number of anticipated water right changes to water right claim 158498, all irrigation rights derived from this claim must have the same season of use. Therefore, it makes sense to set an irrigation season that will capture all extremes of weather, plants, and irrigation needs.

Discussion of Annual Volume Available for Change from Year Round Use to Seasonal Use

This change application proposes to change the purpose of use from municipal supply to irrigation. The irrigation season, as defined by the change application is April 15th through October 31st. This is a period of 200 days, which equates to approximately 55% of the year. So, applying that percentage to the 473.6 acre-feet per year, we arrive at 259.5 acre-feet per year that could be utilized during the period of April 15th through October 31st. The remainder (214.1 acre-feet per year) was historically utilized during the non-irrigation season months and would not be available for use during the irrigation season.

Hydrology and Hydrogeology (Summarized from Dunn, 2006)

Greater Lake Washington, including the Lake Washington Ship Canal, Salmon Bay, and Lake Union, is approximately 22,250 acres in size and is separated from the marine waters of Puget Sound by the Hiram M. Chittenden Locks operated by the U.S. Army Corps of Engineers.

The points of withdrawal utilized by the District were located at the western edge of the Vashon Advance Outwash aquifer. Ground water flowing in this aquifer that is not captured by the wells discharges as springs to form the headwaters of Carillon Creek. Carillon Creek proceeds to flow down hill through Carillon Point and finally into Lake Washington.

All of the historic points of withdrawal and this proposed point of diversion are located in WRIA 8.

FINDINGS

In accordance with state law, the following considerations must be addressed during the process of evaluating this change request:

- Will the change create an enlargement of the original right?
- Does the new point of diversion tap the same source as the original right?
- Will the change cause impairment to other existing rights?
- Will the public interest be impaired?
- Is the new purpose of use considered a beneficial use of water?
- Is the season of use changing?
- What are the protestors concerns?

Potential for Enlargement

This water right claim will not be enlarged because of this change application as long as the rate and volume of water withdrawn/diverted after the change application is not greater than what was historically perfected by King County Water District No. 1. That means that under this claim, including portions that are broken off of the original claim through change applications, the rate of water being pumped from Lake Washington can not exceed 293.6 gpm at any point in time and the amount of water pumped during the irrigation season of April 15 through October 31 can not exceed 259.5 acre-feet per year.

Same Source of Water

Diverting water from Lake Washington, including the Lake Washington Ship Canal, Salmon Bay, and Lake Union, should be considered to be the same source as withdrawing water from the wells used by the KCWD No.1 for the following reasons:

1. Both the wells and Lake Washington are located in WRIA 8.
2. Ground water not captured by the wells, under this water right claim, will naturally discharge from the aquifer, flow down a short surface water drainage named Carillon Creek, and ultimately discharge into Lake Washington.

Impairment of Other Rights

Since the water that was originally captured by the wells and piped to Yarrow Point for domestic use will now naturally discharge from the aquifer and flow into Lake Washington. Lake Washington will not experience any decrease in the amount of water entering it, being stored in it, or draining from it. Therefore, this water right change will not cause impairment of any existing rights.

Public Interest

No detriment to the public interest could be identified during the investigation of this application for change.

Beneficial Use

According to RCW 43.27A.020, RCW 90.14.031, and RCW 90.54.020, irrigation is considered a beneficial use of water.

Season or Period of Use

Since the purpose of use is being changed from a year round use (municipal) to a seasonal use (irrigation) the season of use is automatically changed to reflect this.

Protests

No protests were received during the statutory 30-day protest period.

RECOMMENDATIONS

I recommend the request for change to a portion of Ground Water Claim 158498 be approved, subject to the provisions listed below:

The amount of water granted is a maximum limit that shall not be exceeded and the water user shall be entitled only to that amount of water within the specified limit that is beneficially used and required.

Metering Provision:

An approved measuring device shall be installed and maintained for the diversion of the source identified by this water right in accordance with the rule "Requirements for Measuring and Reporting Water Use", Chapter 173-173 WAC.

Water use data shall be recorded twice a month. Data shall be maintained by the property owner and promptly submitted to Ecology upon request. Recording and retention of data by the water right holder are required to inform the water users about how much water is used, to prove reperfection of the water right after the change, when the water is used, and to assist users in efficient water management.

Chapter 173-173 WAC describes the requirements for data accuracy, device installation and operation, and information reporting. It also allows a water user to petition Ecology for modifications to some of the requirements. Installation, operation, and maintenance requirements are enclosed as a document entitled "Water Measurement Device Installation and Operation Requirements".

Department of Ecology personnel, upon presentation of proper credentials, shall have access at reasonable times, to the records of water use that are kept to meet the above conditions, and to inspect at reasonable times any measuring device used to meet the above conditions.

Washington Department of Fish and Wildlife provision:

The intake shall be screened at all times in accordance with Department of Fish and Wildlife screening criteria. This water right is issued subject to Washington Department of Fish and Wildlife Hydraulic Project Approval.

Shoreline Management Act:

Nothing in this authorization shall be construed as excusing the permittee from compliance with any applicable federal, state, or local statutes, ordinances, or regulations including those administered by local agencies under the Shoreline Management Act of 1971.

Irrigation scheduling:

This water right can only divert water from Lake Washington between 10:00 p.m. and 1:59 a.m., daily, during the irrigation season. To prevent an enlargement of the water right, the water right holder shall install an automatic irrigation timer capable of restricting the time of pumping from Lake Washington to the period described above.

Department of Ecology personnel, upon presentation of proper credentials, shall have access at reasonable times, to the automatic irrigation timer to verify that water is only being diverted during the time period indicated above.

If it can be shown that the requested change has a detrimental effect on existing rights, it shall be the responsibility of the water right holder to mitigate for this impact and/or alter or cease withdrawal of water.

The applicant is advised that a certificate of change will issue for only that quantity of water that has been diverted and applied to actual beneficial use. Such quantity applied to actual beneficial use shall not exceed the quantity specified in this report of examination and will be calculated based on the best information available to Ecology, including metering data.

A certificate of change will not be issued until a final investigation is made.

CONCLUSIONS

In accordance with chapters 90.03, 90.14, and 90.44 RCW, I conclude that Water Right Claim 158498 is in good standing and is eligible for change. I have determined that the change to Water Right Claim 158498 will not enlarge the claim and the water use will be beneficial. Approval of this change request will not cause impairment of existing rights or be detrimental to the public interest. Based on these conclusions, this change request should be approved subject to existing rights and the above-indicated provisions and a certificate of change should be issued once the change has been perfected.

REPORT BY: _____ DATE: _____

Peggy Williams

STATE OF WASHINGTON
DEPARTMENT OF ECOLOGY
Northwest Regional Office • 3190 160th Avenue SE • Bellevue, Washington 98008-5452 • (425) 649-7000

JUN 19 2007

Rick Bailey
City of Bellevue Parks & Community Services
16023 NE 8th St
PO Box 90012
Bellevue WA 98009-9012

Dear Mr. Bailey:

Re: Ground Water Application for Change of Claim No. 158498CL

Enclosed is a notice of your application for change which must be published **once a week for two consecutive weeks** in a qualified legal newspaper of general circulation in King County as provided in RCW 90.03.280. This newspaper should have a general circulation in the locality where the water is to be appropriated and used. A list of newspapers in the area is enclosed.

Please draw to the publisher's attention that the actual date of the **second** publication must appear in the space in the notice over the caption "last date of publication."

The applicant is responsible for the payment of the publication. To assure accuracy, **it is the responsibility of the applicant to check the notice carefully before having it published**. If an error is detected, do not submit the notice for publication, but refer the error to this office for correction and/or resolution.

Please provide us with the **Original notarized affidavit** of each publication. Publication should start within thirty (30) days and the affidavit must be received in this office within sixty (60) days from the date of this letter or rejection will be initiated.

Sincerely,
Nancy Grones
for Dorothy Glenn
Water Resources Program
Northwest Regional Office

DG:ng
Enclosure

WASHINGTON STATE
DEPARTMENT OF
ECOLOGY

STATE OF WASHINGTON
DEPARTMENT OF ECOLOGY

NOTICE OF APPLICATION TO CHANGE AN EXISTING WATER RIGHT CLAIM

***TAKE NOTICE*:**

That the City of Bellevue (Parks and Community Services), Washington on June 4, 2007, has filed an application of change to Ground Water Claim G1-158498CL. Claimed use is for 900 gallons per minute (gpm), 1440 acre-feet per year for municipal supply, continuously, with a claimed priority date of 1888. That the original point of withdrawal is located in the NW 1/4, Section 17, Township 25N, Range 5E, W.M. in King County. The claimed place of use is the Replat of Yarrow Section 18, Township 25N, Range 5E, W.M.

The request here is to change the point of diversion, place of use, and purpose of use for a portion of this water right claim – 90 gpm (0.201 cubic feet per second) and 10.1 afy. The proposed new point of diversion will take water directly from Lake Washington in the NW 1/4, SE 1/4, Section 17, Township 24 N, Range 5 E, W.M. The new place of use will be Tax Parcel 1724059038 in the SE 1/4, Section 17, Township 24 N, Range 5 E, W.M. The new purpose of use will be irrigation of 4.5 acres during the irrigation season.

No increase will be made to the instantaneous withdrawal rate or annual quantity.

Protests or objections to approval of this application must include a detailed statement of the basis for objections: protests must be accompanied with a fifty-dollar ($50.00) recording fee (PLEASE REMIT CHECK OR MONEY ORDER ONLY) and filed with the Department of Ecology at the address shown below, within thirty (30) days from

_____.
(Last date of publication to be entered above by publisher)

DEPARTMENT OF ECOLOGY
CASHIERING OFFICE - NWRO-WR
PO BOX 5218
LACEY WA 98509-5128

REGIONAL NEWSPAPERS FOR PUBLISHING PUBLIC NOTICES

KING COUNTY

Auburn Reporter	600 Washington Ave S, Kent, WA 98032
Bothell/Kenmore Reporter	PO Box 90130, Bellevue, WA 98009
Enumclaw Courier-Herald	PO Box 157, Enumclaw, WA 98022
Federal Way News	133 SW 153rd St, Burien, WA 98166
Highline Times/Demoines Reporter	133 SW 153rd St, Burien, WA 98166
Issaquah Press	PO Box 1328, Issaquah, WA 98027
King County Journal/Eastside	11400 SE 8th, Ste. 450, Bellevue, WA 98004
King County Journal/South	600 Washington Ave. S, Kent, WA 98032
Kirkland Courier	733 7th Ave, Ste. 201, Kirkland, WA 98033
Mercer Island Reporter	PO Box 38, Mercer Island, WA 98040
Renton Reporter	PO Box 130, Kent, WA 98035
Snoqualmie Valley Record	8124 Falls Ave SE, Snoqualmie, WA 98065
Vashon Maury Island Beachcomber	PO Box 130, Vashon Island, WA 98070
Woodinville Weekly	13342 NE 175th, Woodinville, WA 98072

SEATTLE

Ballard News Tribune	2208 NW Market St, Seattle, WA 98107
Beacon Hill News	2314 Third Ave, Seattle, WA 98121
Capitol Hill News	2314 Third Ave, Seattle, WA 98121
Daily Journal of Commerce	83 Columbia St, Seattle, WA 98104
Facts Newspaper	3104 Western Ave, Seattle, WA 98121
North American Post	519 6th Ave S., Seattle, WA 98104
Post Intelligencer	PO Box 1909, Seattle, WA 98111
Queen Ann News	4000 Aurora Ave N, Ste 100, Seattle, 98103
Seattle Chinese Post	PO Box 3468, Seattle, WA 98114
Seattle Medium	2600 S. Jackson St, Seattle, WA 98144
Seattle Times	PO Box 70, Seattle, WA 98111
West Seattle Herald	3500 SW Alaska, Seattle, WA 98126

REGIONAL NEWSPAPERS FOR PUBLISHING PUBLIC NOTICES

CAMANO ISLAND

Stanwood Camano News	PO Box 999, Stanwood, WA 98282

ISLAND COUNTY

Northwest Navigator	9989 Silverdale Way NW, Ste. 109, Silverdale, WA 98383
Sound Whidbey Record	PO Box 387, Langley, WA 98260
Whidbey News-Times	PO Box 10, Oak Harbor 98277

KITSAP COUNTY

Bainbridge Island Review	PO Box 10817, Bainbridge Island, WA 98110
Bremerton Patriot	520 Burwell Street, Bremerton, WA 98337
Central Kitsap Reporter	9989 Silverdale Way NW, Ste. 109, Silverdale, WA 98383
Kitsap Sun	PO Box 259, Bremerton, WA 98337
North Kitsap Herald	PO Box 278, Poulsbo, WA 98370
Port Orchard Independent	PO Box 27, Port Orchard, WA 98366

SAN JUAN COUNTY

Islands' Sounder	PO Box 758, Eastsound, WA 98245
San Juan Journal	PO Box 519, Friday Harbor, WA 98250

SKAGIT COUNTY

Anacortes American	PO Box 39, Anacortes, WA 98221
Argus	PO Box 589, Burlington, WA 98233
Channel Town Press	PO Box 575 LaConner, WA 98257
Courier-Times	PO Box 32, Sedro-Woolley, WA 98284
Skagit Valley Herald	PO Box 578, Mount Vernon, WA 98273

SNOHOMISH COUNTY

Arlington Times	PO Box 67, Arlington, WA 98223
Everett Herald	PO Box 930, Everett, WA 98206
Lynnwood Enterprise	PO Box 977, Lynnwood, WA 98046
Marysville Globe	PO Box 145, Marysville, WA 98270
Monroe Monitor/Valley News	PO Box 399, Monroe, WA 98270
Snohomish County Tribune	PO Box 499, Snohomish, WA 98290
Stanwood/Camano News	PO Box 999, Stanwood, WA 98292

WHATCOM COUNTY

Bellingham Herald	1155 N. State Street, Bellingham, WA 98227
Ferndale Record-Journal	PO Box 153, Lynden, WA 98264
Lynden Tribune	PO Box 153, Lynden, WA 98264

STATE OF WASHINGTON, COUNTY OF KING }
AFFIDAVIT OF PUBLICATION

PUBLIC NOTICE

Linda M Mills, being first duly sworn on oath that she is the Legal Advertising Representative of the

Bellevue Reporter

a bi-weekly newspaper, which newspaper is a legal newspaper of general circulation and is now and has been for more than six months prior to the date of publication hereinafter referred to, published in the English language continuously as a bi-weekly newspaper in King County, Washington. The Bellevue Reporter has been approved as a Legal Newspaper by order of the Superior Court of the State of Washington for King County.

The notice in the exact form annexed was published in regular issues of the Bellevue Reporter (and not in supplement form) which was regularly distributed to its subscribers during the below stated period. The annexed notice, a:

Public Notice

was published June 30, 2007 and July 07, 2007

The full amount of the fee charged for said foregoing publication is the sum of $527.26

Linda M Mills

Linda M. Mills
Legal Advertising Representative, Bellevue Reporter
Subscribed and sworn to me this 23rd day of July, 2007.

B D Cantelon

B D Cantelon
Notary Public for the State of Washington, Residing in Kent, Washington
P. O. Number:

B D CANTELON
COMMISSION EXPIRES
NOTARY PUBLIC
03/09/2010
STATE OF WASHINGTON

STATE OF WASHINGTON
DEPARTRMENT OF ECOLOGY
NOTICE OF APPLICATION TO CHANGE AN EXISTING WATER RIGHT CLAIM

Take Notice:

The City of Bellevue (Parks & Community Services), Washington on June 4, 2007, has filed an application of change to Ground Water Claim G1-158498CL. Claimed use is for 900 gallons per minute (gpm), 1440 acre-feet per year for municipal supply, continuously, with claimed priority date of 1888. That the original point of withdrawal is located in the NW 1/4, Section 17, Township 25N, Range 5E, W.M. in King County. The claimed place of use is the Replat of Yarrow Section 18, Township 25N, Range 5E, W.M.

The request here is to change the point of diversion, place of use, and purpose of use for a portion of this water right claim – 90 gpm (0.201 cubic feet per second) and 10.1 afy. The proposed new point of diversion will take water directly from Lake Washington in the NW 1/4, SE 1/4, Section 17, Township 24 N, Range 5 E, W.M. The new place of use will be Tax Parcel 1724059038 in the SE 1/4, Section 17, Township 24 N, Range 5 E, W.M. The purpose of the use will be to irrigate 4.5 acres during the irrigation season.

No increase will be made to the instantaneous withdrawal rate or annual quantity.

Protests or objections to approval of this application must include a detailed statement of the basis for objections: protests must be accompanied with a fifty-dollar ($50.00) recording fee (PLEASE REMIT CHECK OR MONEY ORDER ONLY) and filed with the Department of Ecology at the address shown below, within thirty (30) days from July 7. 2007.

DEPARTMENT OF ECOLOGY
CASHERING OFFICE – NWRO-WR
PO BOX 5218
LACEY WA 98509-5128

Published in the Bellevue Reporter June 30, 2007, and July 7, 2007. #863673

Appendix B:
Kirkland Parks Irrigation Withdrawal Biological Evaluation

Rcd June 19. 2007

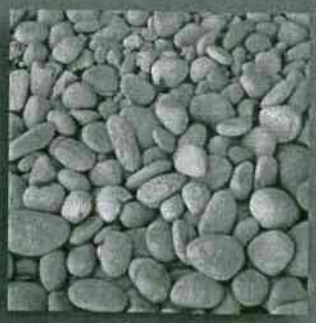

BIOLOGICAL EVALUATION

Proposed Lake Washington Irrigation Water Withdrawal, Kirkland WA NWS-2007-431-NO

Prepared for:

City of Kirkland
Parks and Community Services Department
Attn: Jason Filan
123 Fifth Avenue
Kirkland, WA 98033

Prepared by:

The Watershed Company
750 Sixth Street South
Kirkland, WA 98033
p 425.822.5242
f 425.827.8136

18 June 2007

THE WATERSHED COMPANY

DRAFT BIOLOGICAL EVALUATION

for Sensitive Fish and Wildlife Species at the Proposed Lake Washington Irrigation Withdrawal Sites, City of Kirkland Parks, WA: NWS-2007-431-NO

Prepared for:

U.S. Army Corps of Engineers
Seattle District – Regulatory Branch
PO Box 3755
Seattle, WA 98124

Prepared on behalf of:

City of Kirkland Parks and Community Services Department
Attn: Jason Filan
123 Fifth Avenue
Kirkland, WA 98033

Prepared by:

THE WATERSHED COMPANY
750 SIXTH STREET SOUTH
KIRKLAND WA 98033

18 June 2007

TABLE OF CONTENTS

Section — Page No.

1. Project Description 1
   - 1.1 Timing Restriction 4
   - 1.2 Action Area 5

2. Location 5

3. Listed Species 5

4. Description of Project Area and Baseline Conditions 6
   - 4.1 Juanita Beach Park 6
   - 4.2 Juanita Bay Park 7
   - 4.3 Waverly Beach Park 7
   - 4.4 Heritage Park 8
   - 4.5 Marina Park 8
   - 4.6 David E. Brink Park 8
   - 4.7 Marsh Park 8
   - 4.8 Houghton Beach Park 9

5. Species Information and Site Use 9
   - 5.1 Chinook Salmon 9
   - 5.2 Coho Salmon 10
   - 5.3 Bull Trout 10
   - 5.4 Steelhead Trout 11
   - 5.5 Bald Eagle 12

6. Species Impacts 12
   - 6.1 Salmonids 12
   - 6.2 Bald Eagle 15

7. Critical Habitat 15
   - 7.1 Chinook Salmon 15
   - 7.2 Coho Salmon 17
   - 7.3 Steelhead 17
   - 7.4 Bull Trout 17
   - 7.5 Bald Eagle 19

8. Essential Fish Habitat 19

9. Cumulative Impacts 20

10. Determination of Effect 21

References 22

TABLE OF CONTENTS (cont'd)

Appendix A: Water Right Claim Documentation
Appendix B: Hydraulic Project Approval
Appendix C: Project Plans
Appendix D: Project Area Photographs

Page No.

List of Tables

Table 1. Checklist for Documenting Environmental Baseline and Effects of Proposed Action(s) on Relevant Indicators – Draft modified by NOAA Fisheries for lakes. 7

Table 2. Assessment of Primary Constituent Elements for Chinook Salmon. 16

Table 3. Assessment of Primary Constituent Elements for Bull Trout. 18

Table 4. Determinations of Effect. 21

List of Figures

Figure 1. Maps of the project area [from MapQuest. 2

Figure 2. Overview map of project site locations (prepared by City of Kirkland Parks Department). 3

Biological Evaluation
Section 7, Endangered Species Act

Applicant: City of Kirkland **Corps Reference #: NWS-2007-431-NO**

1. Project Description

The purpose of this Biological Evaluation (BE) is to assess the installation and operation of irrigation intakes at eight different City of Kirkland parks locations on the east shore of Lake Washington (Figures 1 and 2). The City of Kirkland Parks & Community Services Department (Parks) purchased a water right from King County Water District No. 1 for Lake Washington water that was originally used to serve Yarrow Point. As Yarrow Point will be contracting with the City of Bellevue for water, the District is selling all of its assets, including its water right, and then dissolving. The total amount of the water right is for a maximum of 142 gallons per minute, not to exceed 41.8 acre feet per year. The water right documentation is attached as Appendix A.

The water withdrawn from Lake Washington by Parks would be used to irrigate eight parks, which are currently provided with irrigation water from the City's potable water system. The hookups to the City's water system would be maintained in the event that lake waters become temporarily contaminated by spills or herbicide treatments of aquatic vegetation in the Yarrow Point or Hunts Point areas and are temporarily unsuitable for application to City parks. The total irrigated area would be 49 acres of lawn and approximately 9 acres of landscape trees and shrubs. The water right limits withdrawals to the period from April 15 to October 31, and from 11:00 p.m. to 7:00 a.m.

The location and design of the intake structures has been established during meetings of Parks with Washington Department of Ecology (DOE) and the Washington Department of Fish and Wildlife (WDFW). Parks has already received a Hydraulic Project Approval for the proposed work (see Appendix B). The HPA includes intake design stipulations that have been incorporated into the proposed project as follows:

- Pump intake shall be screened to prevent entry of fish (adult and juvenile)
- Screened intake shall consist of a facility with enough surface area to ensure that the velocity through the screen is less than 0.4 feet per second
- Screen shall be maintained to prevent the injury or entrapment of fish.
- Water intake shall be located at least 18 inches above the bottom of the lake, underneath an existing pier, and point upward.
- Piping shall run underneath an existing pier, either attached to the bottom of the pier (preferred) or on the lake bed (acceptable, but not preferred) and extend to the second-to-last piling of the pier if the water depth is greater than 10 feet at the point, or the last piling if the water is less than 10 feet deep.
- The pump shall be located on land.

The plans for the proposed project are included in Appendix C, in addition to information about the intake screen and the upland utility vault. At park locations where the pump installation site would not be elevated above the lake level, the pump would be secured in a bench-like vault

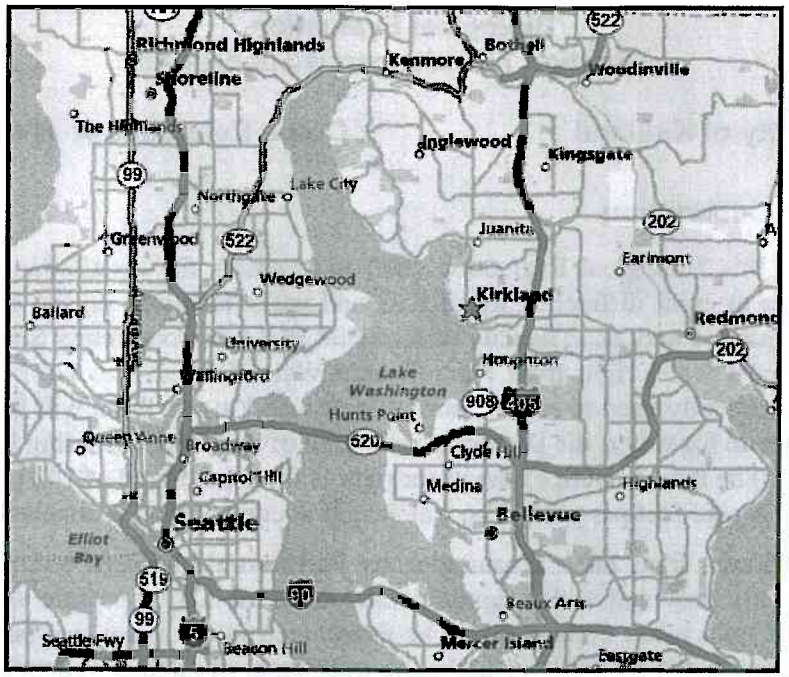

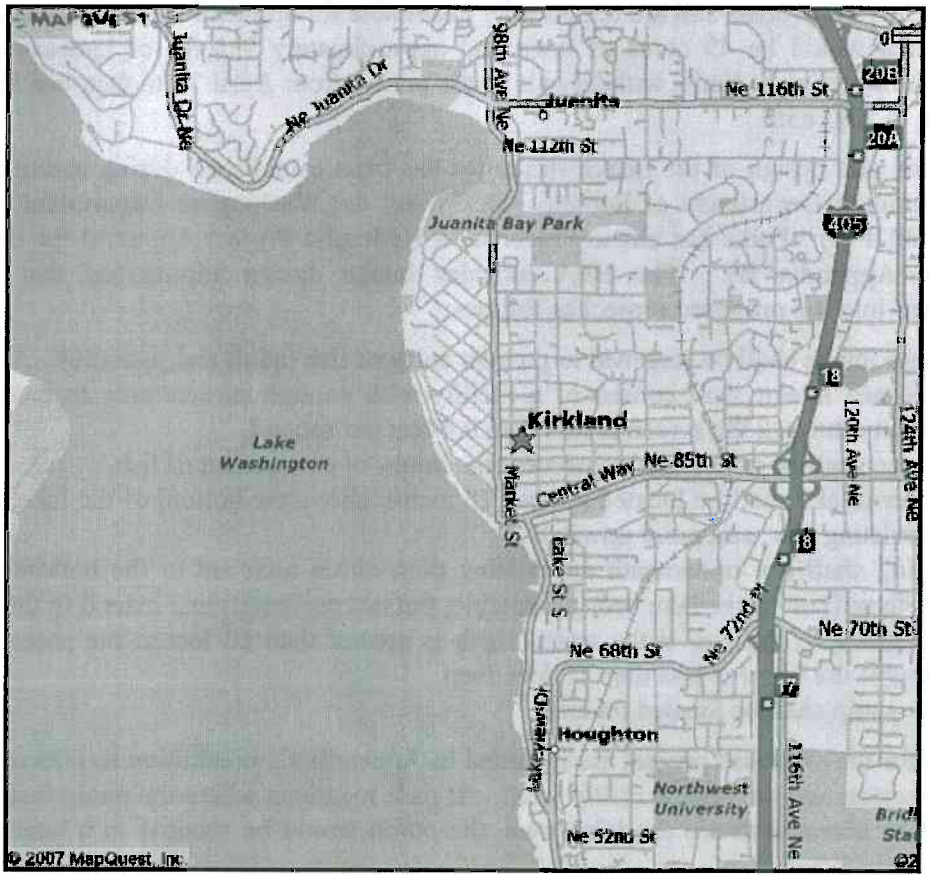

Figure 1. Maps of the project area [from MapQuest.

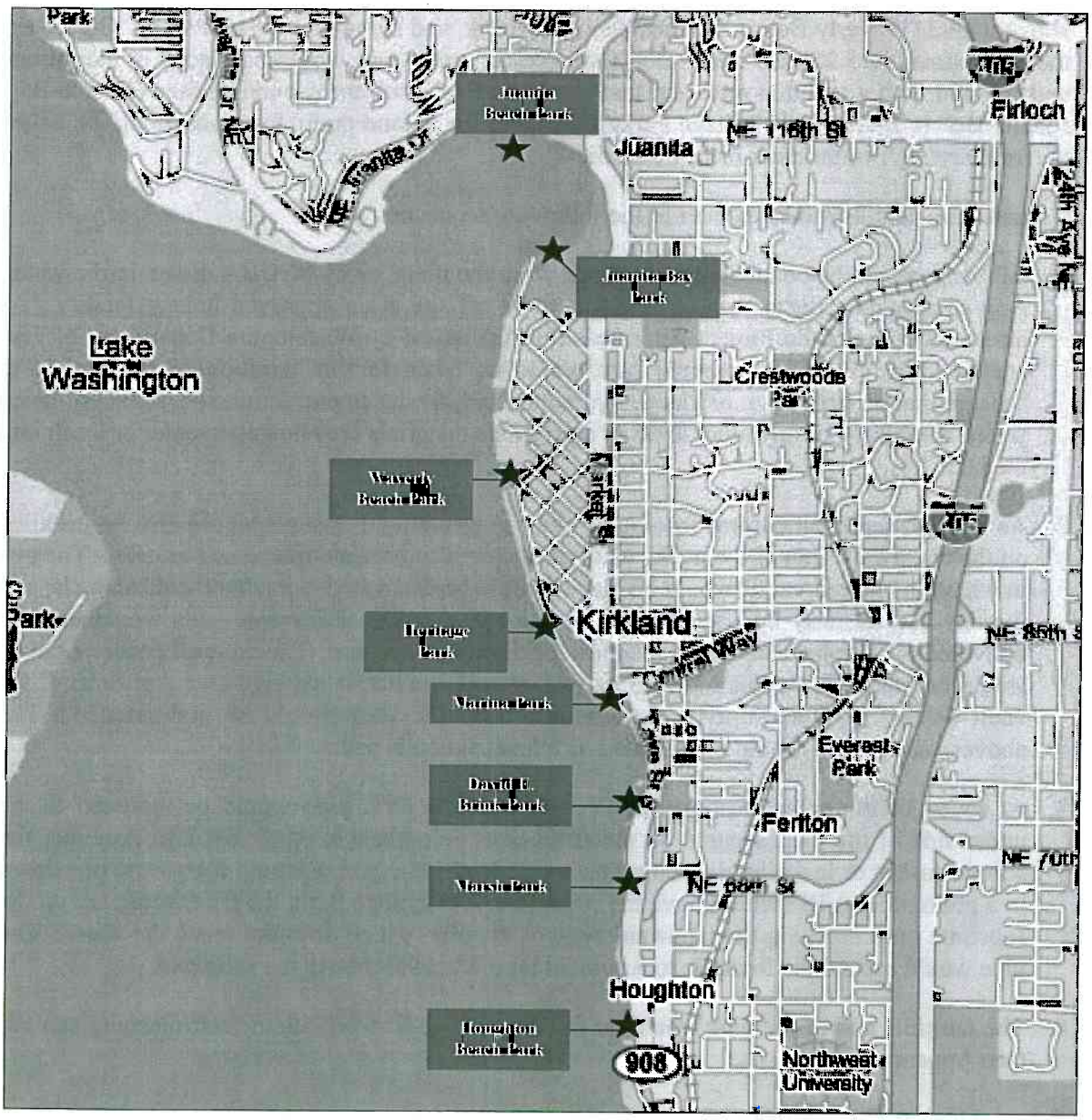

Juanita Beach Park – 9703 NE Juanita Drive
Juanita Bay Park – 2201 Market Street
Waverly Beach Park – 633 Waverly Way
Heritage Park – 295 Lake Avenue West
Marina Park – 25 Lakeshore Plaza Drive
David E. Brink Park – 555 Lake Street S
Marsh Park – 6605 Lake Washington Blvd NE
Houghton Beach Park – 5811 Lake Washington Blvd

Figure 2. Overview map of project site locations (prepared by City of Kirkland Parks Department).

aboveground (Waverly Beach, Marina, David E. Brink, and Houghton Beach Parks). Otherwise, the approximately 5.25'x2.3'x2.5' pre-fabricated concrete vault would be placed in the ground and covered with a textured metal lid that would be flush with the ground surface (Juanita Bay, Juanita Beach, Marsh and Heritage Parks). None of the upland pump locations would be below the ordinary high water mark or in wetlands.

Construction activities would occur in the following sequence:

1. All work would be conducted from shore, from the piers, or by SCUBA divers in the water. Any construction debris would be disposed of off-site at an approved upland facility. As directed by Hydraulic Project Approvals (HPAs) issued by Washington Department of Fish and Wildlife (WDFW), extreme care would be taken for the duration of the project to "ensure that no petroleum products, hydraulic fluid, fresh cement, sediments, sediment-laden water, chemicals, or any other toxic or deleterious materials are allowed to enter or leach into the lake."

2. As needed, sediment control fencing or other preventative measures would also be installed on the waterward side of the utility vault excavations to prevent upland soil erosion. The pits in which the buried vaults would be placed would be excavated using hand-held shovels, and the dirt hauled away by wheelbarrow or gator to a truck. Excavated soils would then be delivered to an approved upland location for disposal or re-use. The pre-cast concrete vaults would be placed in the pit and then backfilled with the native material (see Appendix C for vault details). As appropriate, bare soils around the vault would be hydroseeded. The aboveground vaults would be mounted on a level concrete pad.

3. At seven of the eight locations, the 2-inch-diameter PVC pipe would be mounted to the under-side of the pier, secured by metal brackets (see plans in Appendix C). At either the second-to-last or last pile (depending on water depth), the piping would follow the pile down to a point at least 18 inches above the substrate. At Heritage Park, the pipe would lay on the substrate until reaching the landward edge of the pier, which does not reach the shore. The pipe would ascend the first pile to a point at least 18 inches above the substrate.

4. The terminal end of the pipe would be fitted to a 50 gallon-per-minute self-cleaning strainer (see Appendix C).

1.1 Timing Restriction

Each of the sites would likely take one day to install the upland utility vault with pump and the intake piping and screen. Construction would begin as soon as permits and scheduling would allow, but no in-water work would occur from 15 March through 15 July, per the combined fish-protection policies of NOAA Fisheries, USFWS, and WDFW in Lake Washington.

The proposed project closest to a bald eagle (*Haliaeetus leucocephalus*) nest is located at Waverly Beach Park, approximately 1,200 feet south of a nest site (WDFW 2006) and all projects are located near perch trees. However, because project implementation would not produce noise levels at or above the ambient condition, application of timing restrictions to prevent breeding or winter foraging bald eagles is not necessary.

The combined fish and wildlife timing and equipment restrictions are depicted graphically below. The applicant would comply with any amendments made to the below timing restrictions following USACE, NOAA Fisheries, and USFWS review.

	Jan	Feb	Mar	Apr	May	Jun	Jul	Aug	Sep	Oct	Nov	Dec
Federal & State fish protection				No in-water work								
Bald eagle protection	No restrictions											

1.2 Action Area

"Action area" is defined as *"all areas to be affected directly or indirectly by the proposed action and not merely the immediate area involved in the action."* Based on the analysis below, the disturbance effects of this project on chinook salmon, bull trout, coho salmon (*O. kisutch*), and steelhead (*O. mykiss*) would be realized only at the pier replacement area itself. No other areas would be affected directly or indirectly.

According to the USFWS, pile driving and other loud activities can affect foraging or nesting bald eagles up to 1.0 mile away. Thus, the action area for bald eagles would be within a 1.0-mile radius of the proposed construction activity.

2. Location

The proposed project site is located at the following addresses on the east shore of Lake Washington, City of Kirkland, King County: Juanita Beach Park – 9703 NE Juanita Drive; Juanita Bay Park – 2201 Market Street; Waverly Beach Park – 633 Waverly Way; Marina Park – 25 Lakeshore Plaza Drive; David E. Brink Park – 555 Lake Street S; Marsh Park – 6605 Lake Washington Blvd NE; and Houghton Beach Park – 5811 Lake Washington Blvd. Sections 30/31, T26N, R5E; Sections 6/7/8/17, T25N, R5E; Willamette Meridian (see Figure 2). Tax parcel numbers: 1791500425, 3126059011, 0625059016, 1706900010, 0625059031, 0825059133, 0825059088, 1725059051.

3. Listed Species

The proposed project area is located along the shoreline of Lake Washington, which is within the geographic range of three federally listed species of salmonids: 1) chinook salmon of the Puget Sound Evolutionary Significant Unit (ESU) (Reaffirmed as Threatened, U.S. Federal Register, 28 June 2005), 2) bull trout of the Coastal-Puget Sound Distinct Population Segment (DPS) (Threatened, U.S. Federal Register, 1 November 1999), and steelhead of the Puget Sound DPS (U.S. Federal Register, 29 March 2006). Coho salmon of the Puget Sound-Strait of Georgia ESU are also present in the watershed and are currently considered a Species of Concern (U.S. Federal Register, 15 April 2004), indicating that they are under less active consideration for formal listing. An ESU of Pacific salmon is considered to be a DPS and thus a "species" under the Endangered Species Act. Wintering, communal night roosting, and nesting bald eagles are

also present in the watershed (Threatened, proposed for delisting, U.S. Federal Register, 6 July 1999). All of these species may be present in the action area during a portion of their life cycle.

The project area is also located within critical habitat that has been formally designated for Puget Sound chinook salmon and Coastal-Puget Sound bull trout. Critical habitat for chinook salmon includes the Lake Washington Subbasin (Watershed Code 17110012-03) of the Puget Sound ESU (U.S. Federal Register, 2 September 2005), and critical habitat for bull trout of the Coastal-Puget Sound DPS includes Lake Washington, which is in Critical Habitat Unit 28 – Puget Sound (U.S. Federal Register, 26 September 2005).

4. Description of Project Area and Baseline Conditions

The baseline conditions that chinook and coho salmon, and bull trout presently face in the Lake Washington watershed are described in the SPN (USACE et al. 2001) and the *Salmon and Steelhead Habitat Limiting Factors Report for WRIA 8* (Kerwin 2001). This discussion describes the relevant site-specific baseline conditions within the action area, in particular focusing on those items that are different in condition than Lake Washington as a whole. The conditions for Lake Washington and the action area are summarized in Table 1 below.

Aaron Bosworth, Fisheries Biologist, and Amy Myers, Wetland/Wildlife Biologist, of The Watershed Company, conducted a site visit on 10 May 2007. All park sites are treated as needed with organic, slow-release fertilizers. Herbicide use is very limited, primarily applied only to persistent weeds in sidewalk cracks. Glyphosate is used for purple loosestrife control efforts. No pesticides are applied near water. The following description of relevant existing conditions at each site is based upon observations from the site visit and from materials supplied by the applicant. Photographs of each site are included in Appendix D.

4.1 Juanita Beach Park

The shoreline in the park is exclusively natural sand beach, with no shoreline vegetation. The pier is decked with solid wood planks, and the pier width is 8 feet. The piles are wood, approximately 12 inches in diameter. At the location of the intake, terminal pile of the easternmost leg of the pier, the substrate was sand and the water depth was just over 6 feet. Aquatic vegetation cover, primarily Eurasian watermilfoil, was estimated at 30 percent.

Table 1. Checklist for Documenting Environmental Baseline and Effects of Proposed Action(s) on Relevant Indicators – Draft modified by NOAA Fisheries for lakes.

PATHWAYS	ENVIRONMENTAL BASELINE			EFFECTS OF THE ACTION(S)		
INDICATORS	Properly Functioning	At Risk[1]	Not Prop. Functioning	Restore[1]	Maintain[2]	Degrade[3]
Water Quality						
Temperature/Dissolved Oxygen		X			X	
pH		X			X	
Chem. Contamination		X			X	
Nutrients/Total P		X			X	
Habitat Access						
Physical Barriers		X			X	
Habitat Elements						
Exotic Species (in water)			X		X	
Shoreline Upwelling/ Downwelling			X		X	
Structural Complexity (LWD/emergent/ submergent vegetation)		X			X	
Substrate Composition			X		X	
Shoreline Conditions						
Shoreline Vegetation and Riparian Structure			X		X	
Shoreline Gradient			X		X	

[1] For the purposes of this checklist, "restore" means to change the function of an "at risk" indicator to "properly functioning," or to change the function of a "not properly functioning" indicator to "at risk" or "properly functioning" (i.e., it does not apply to "properly functioning" indicators).
[2] For the purposes of this checklist, "maintain" means that the function of an indicator does not change (i.e., it applies to all indicators regardless of functional level).
[3] For the purposes of this checklist, "degrade" means to change the function of an indicator for the worse (i.e., it applies to all indicators regardless of functional level). In some cases, a "not properly functioning" indicator may be further worsened, and this should be noted.

4.2 *Juanita Bay Park*

The Juanita Bay Park pier is a raised, fixed-pile boardwalk extending over wetlands to the open-water lake edge, and terminating in a viewing platform. The platform is decked with perforated metal grating. On either side of the platform is a wetland community consisting of willows, spiraea, yellow iris, cattail, and pond lily. The substrate is mud and muck, and the water depth varied between 1.9 and 2.4 feet at the terminal end of the platform. The support piles are 4-inch-diameter steel.

4.3 *Waverly Beach Park*

The shoreline in the park is variable, ranging from sand beach to vertical concrete bulkhead. Shoreline vegetation is limited to lawn, except for a narrow band of low shrubs upland of the

bulkhead section. The pier is decked with solid wood planks, and the pier width is 12 feet, extending out to a larger platform. The piles are wood, approximately 12 inches in diameter. The water depth was approximately 10.5 feet at the terminal pile (approximately 240 feet from shore), with a foot of clearance between the water surface and the underside of the pier. The deck surface was 2.5 feet above the water surface. At the location of the proposed intake, the substrate is sand and aquatic vegetation cover, primarily Eurasian watermilfoil, was estimated at 70 percent.

4.4 Heritage Park

This small waterfront extension of Heritage Park is a mix of natural shoreline with some concrete blocks. Large Oregon ash and cottonwood trees are located on the water line, and a large almost-dead limb extends over and is partially submerged in the water. Other vegetation along the shoreline includes some Himalayan blackberry, yellow iris, grasses, creeping buttercup, English daisy, clover, velvet grass, dandelion and some ivy around a non-native landscape tree. The pier is only 1.5 feet wide and does not connect to the shoreline. The intake pipe will be attached to the first pile (to minimize length of pipe on the lake bed), which was in approximately 3 feet of water. The substrate is large, rounded cobbles mixed with gravels and some sand. No aquatic vegetation was observed.

4.5 Marina Park

The shoreline at Marina Park is variable, ranging from angular boulder around the landward end of the marina, and sandy beach ringed by concrete steps to the north. Shoreline vegetation is limited to lawn, with a few landscape trees and shrubs set back from the ordinary high water mark. The main pier walkway is 12.6 feet wide, supported by 12-inch-diameter wood piles, and decked with solid wood planks. The intake pipe will be attached to the second pile from the waterward end of the pier (approximately 390 feet from shore), in greater than 25 feet of water. Substrate composition could not be determined at that depth and no aquatic vegetation was observed.

4.6 David E. Brink Park

The shoreline in the vicinity of the pier was concrete. Shoreline vegetation was limited to lawn, except for a single weeping willow several hundred feet north, and a few landscape shrubs to the south. The main pier walkway is 12.6 feet wide, supported by 12-inch-diameter wood piles, and decked with solid wood planks. The intake pipe will be attached to the second pile from the waterward end of the pier (approximately 150 feet from shore), which was in 19 feet of water at the time of the site visit. The substrate is a mixture of sand and mud, and aquatic vegetation cover, primarily Eurasian watermilfoil, was estimated at 90 percent.

4.7 Marsh Park

The shoreline in the vicinity of the pier is armored with angular rock, with a sand beach farther south. Shoreline vegetation in the immediate area is limited to some deciduous trees that provide morning shade, and a Douglas-fir set well back from the water's edge. The pier walkway is supported by 12-inch-diameter wood piles, and decked with solid wood planks. The water depth

was close to 10 feet at the terminal pile (approximately 90 feet from shore). The substrate is predominately sand, overlain by some cobbles. Aquatic vegetation cover, primarily Eurasian watermilfoil, was estimated at 30 percent.

4.8 Houghton Beach Park

The shoreline in the vicinity of the pier is predominantly natural sand beach, with some patches of yellow iris, soft rush, and sedges. The main pier walkway is supported by 12-inch-diameter wood piles, and decked with solid wood planks. The intake pipe will be attached to the second pile from the waterward end of the pier (approximately 245 feet from shore), which was in 11.5 feet of water at the time of the site visit. The substrate is a mixture of sandy silts, and aquatic vegetation cover, primarily Eurasian watermilfoil, was estimated at 40 percent.

5. Species Information and Site Use

Site-specific information about each species is presented below. General and lake-specific life history information related to temperature, diet, and migration is contained in the Federal Register listings (U.S. Federal Register, 1 November 1999; U.S. Federal Register, 15 April 2004; U.S. Federal Register, 28 June 2005; U.S. Federal Register, 2 September 2005; U.S. Federal Register, 26 September 2005, 29 March 2006), the SPN (USACE 2001), and the *Salmon and Steelhead Habitat Limiting Factors Report for the Cedar-Sammamish Basin* (Kerwin 2001).

5.1 Chinook Salmon

In the Lake Washington watershed, summer/fall-run chinook salmon migrate through Lake Washington to reach spawning habitat in the Cedar and Sammamish River systems as well as other Lake Washington tributaries. Occasional beach spawning within Lake Washington has been observed (Roberson 1967; Fresh, pers. comm., 28 March 2000). Adults begin migrating into fresh water in June, peaking in August, and spawn in the tributaries to Lake Washington from mid-August to mid-December (Myers et al. 1998).

Annual emigration monitoring studies indicate that juvenile chinook salmon migrating from the tributaries into Lake Washington exhibit two basic strategies: 1) direct migration to the lake as fry without extended stream rearing; and 2) migration to the lake as parr or smolts, following extended stream rearing. Chinook fry begin entering Lake Washington around the first of the year, peaking in February, while parr and smolts (average length 100 mm) enter the lake from April through July, peaking in late May. Juveniles entering the lake as fry rear in the lake until they migrate as smolts beginning in April. Fry entering the lake in winter associate closely with the shoreline, and prefer shallow water, shallow-sloped, sand and small gravel beaches proximate to sources of complex cover. The majority of the chinook juveniles in the Lake Washington watershed migrate from the system by mid-summer; most of the remaining juveniles have left by September. However, a small number of juveniles exhibit extended rearing in Lake Washington and residual chinook are also observed.

In regards to the proposed project, juvenile chinook are most likely to be present in the action area from January through June. Adult chinook may be in the action area from June to

November, but would not be expected in the extreme nearshore area where construction would occur. Chinook salmon have been documented in Juanita Creek (the mouth of which is near one of the proposed water intake structures), but this creek is not considered a primary spawning area for the chinook salmon. Other Kirkland area streams flowing into Lake Washington near the proposed work areas detailed above are generally too small to support spawning by chinook.

5.2 Coho Salmon

Adult coho salmon migrate through Lake Washington to reach tributaries suitable for spawning. Adults begin migrating into fresh water in August, and spawn from late October through December in most systems (WDF et al. 1993). Beak Consultants Incorporated (1998) reported that the peak smolt migration from the Sammamish River into Lake Washington was April through mid-May coinciding with releases from Issaquah hatchery. While some coho enter Lake Washington from the tributaries as age-0 fish, most coho juveniles enter the lake as smolts (average length > 100 mm) from May to June. Thus, the majority of juvenile coho are not rearing in Lake Washington for extended periods; rather they are migrating through the lake to Puget Sound. Juvenile coho may avoid the high temperatures in the littoral zone during the summer, and are likely to migrate from the littoral zone or from the lake before water temperatures exceed 17°C, which often occurs by mid- or late- June.

Juvenile coho are most likely to be migrating through the action area from mid-March through June. Adult coho may be in the action area from August to December, but are not expected to use the nearshore area where construction activities would occur. The only Kirkland Area streams with documented coho salmon use include Juanita Creek, Forbes Creek , and Yarrow Creek. Although the Juanita Beach Park intake structure will be located approximately 1/4 mile from the mouth of Juanita Creek, installation and operation of this devise will not affect juvenile or adult coho salmon using this creek.

5.3 Bull Trout

Native char are not commonly observed within Lake Washington. Bull trout are observed at the Ballard Locks every year with numbers observed or caught varying from three to nine fish per year (Goetz, pers. comm., 14 May 2004). Bull trout entering and exiting the Ship Canal would likely occur between February and June, with those fish most likely coming from North Puget Sound tributaries. They are observed/caught at the Locks between May and July; little or no monitoring occurs at the Locks from February through April, so data is not available for that period. In 2003, two bull trout were observed entering the Ship Canal in June (Goetz, pers. comm., 14 May 2004). In Lake Washington, bull trout have been caught and observed during winter and spring, typically in the south Lake Washington/Cedar River area.

Little is known about bull trout distribution and habitat use within Lake Washington, and any current projections are generally based on extrapolation of similar information from other bull trout populations. Bull trout would not be expected within the littoral zone when nearshore temperatures exceed 15°C (generally, from May through mid-October). Juvenile bull trout would remain in headwater streams until the onset of piscivory, at a body length of approximately 300 mm, at which point they would migrate as subadults in search of improved foraging opportunities. Subadult bull trout often migrate with adults to headwater streams

during the summer and fall, and return to larger rivers to overwinter. Bull trout may be attracted to spawning aggregations of prey fish such as longfin smelt. Many native char in populations from north Puget Sound exhibit anadromy, migrating to marine waters in late winter.

In conclusion, the presence of juvenile bull trout in Lake Washington is very limited to unlikely and subadult and adult bull trout in the lake would not be subjected to similar predation pressure as juveniles. Adult and subadult bull trout would avoid the littoral zone during the summer due to excessive water temperatures and are not expected to use the nearshore areas where construction activities are planned.

5.4 Steelhead Trout

Lake Washington winter steelhead are currently present in the watershed, including Lake Washington, and are identified by WDFW (2002) as a discrete stock within the Puget Sound steelhead DPS. Lake Washington winter steelhead are characterized as a native stock with wild production, and their stock status was adjusted downward from "depressed" to "critical" in 2002 due to chronically low escapements and severe short-term declines in escapement in 2000 and 2001. As of 2004, these escapement numbers had not increased (WDFW 2002), and total escapement estimates for the Lake Washington basin between years 2000 and 2004 have ranged between 20 and 48 fish. Historic steelhead escapement estimates for the Lake Washington basin were estimated at 1,816 in 1986 (the earliest year on record), and have steadily declined since that time. The current escapement goal set by WDFW is 1,600 fish.

Steelhead historically occurred throughout the Lake Washington basin, and likely spawned in many Lake Washington and Lake Sammamish tributaries. The steelhead spawning period in the Lake Washington watershed currently extends from mid-December through early June, with most adult fish in the run typically returning to the Cedar River or Sammamish River tributaries. Two life forms of *O. mykiss* are commonly distinguished based on life history characteristics: anadromous (steelhead), and resident (rainbow trout). Both anadromous steelhead and resident rainbow trout are likely present in the Lake Washington watershed. Juveniles generally migrate seaward as smolts in March to early June after two years of stream residence, although duration of freshwater rearing can range from one to seven years before juveniles grow large enough (>170 mm) to undergo smoltification. Steelhead exhibit a highly variable anadromous life history. "Summer" steelhead, also known as stream-maturing, typically enter freshwater from May-October in a sexually immature condition and remain in rivers all winter, spawning the following spring. Summer steelhead are slightly smaller and generally return to cooler streams further inland than "winter" steelhead characteristic of coastal streams, which enter freshwater from November to April with well-developed gonads and spawn shortly thereafter (Busby et al. 1996). Steelhead in the Lake Washington basin are most likely winter run fish, and summer steelhead are not thought to inhabit the watershed.

Summer surface temperatures in Lake Washington often exceed the thermal preferences of most salmonids, including steelhead. In conclusion, juvenile steelhead may be migrating through or rearing in the action area throughout the year, but would not be expected in the nearshore area where construction would occur from June through September. Adult steelhead would not be present in the action area until after the summer construction period had ended. The nearest

stream with documented steelhead use is the Sammamish River, over four miles to the north of the project area.

5.5 Bald Eagle

There are no known communal roosts in the project area (Negri, pers. comm., 2 September 1999). Resident bald eagles breed close to Lake Washington shorelines; the nearest known bald eagle nest site in the vicinity of the proposed projects is approximately 1,200 feet north of Waverly Beach Park and 0.5 mile south of Juanita Bay Park (WDFW 2006). There are suitable perching trees in the vicinity of each park.

6. Species Impacts

6.1 Salmonids

The effects of installing and operating the proposed water withdrawal system on the overall conditions of Lake Washington and the action area are indicated in the NOAA Fisheries "Checklist for Documenting Environmental Baseline and Effects of Proposed Action(s) on Relevant Indicators" as revised by NOAA Fisheries for lakes (see Table 1). Installation and operation of the system could have similar affects on bull trout, chinook salmon, steelhead, and coho salmon using Lake Washington. An exception would be indirect effects resulting from potential impacts to prey species within the action area. Unless otherwise noted, there is no distinction between these species within the following discussion.

Direct Effects on Salmonids

1. Water Quality (substrate disturbance, discharge of waste products, and turbid runoff from disturbed uplands): At many locations, the water pumps will be either partially or entirely buried, but they will all be located landward of OHW. Excavation and backfilling to install the pump housings (utility vaults) could potentially produce a small amount of turbid runoff from the disturbed uplands. Turbid runoff would be unlikely, however, because the utility vaults will be installed quickly (one day) and disturbed soils associated with them will be surrounded by sediment fence. Installation of the pumps and intake lines would not create and/or cause hazardous or toxic wastes or other products to be released into the water. Installation of the intake lines would be completed from atop existing piers, from a small boat adjacent to an existing pier, or by divers in the water. Installation is not expected to result in any substrate disturbance. Installation of the proposed project would not affect water quantity or temperature.

   Operation of the water withdrawal system would not result in disturbance to the substrate or turbid runoff from upland areas. The water pumps would be sealed in concrete utility vaults landward of the OHWM, and any waste products associated with the pumps would be confined within the utility vault. Water withdrawals directly from Lake Washington will replace existing water withdrawals that occur through King County Water District No. 1, and will not result in an enlargement of the existing water right, nor will they divert water from a different source than they do now. District No. 1 currently diverts water from the western

edge of the Vashon Advance Outwash aquifer. Ground water flowing in the Vashon aquifer discharges as springs in the Carillon Creek headwaters, which flows as a small surface stream down through Carillon Point and into Lake Washington. Under the proposed operating system, water formerly used to supply the Town of Yarrow Point with drinking water will be left in the aquifer to discharge naturally through Carillon Creek to Lake Washington. The proposed operating system will divert the same amount of water directly from the lake, rather than taking it from the aquifer. Therefore, the historic point of water withdrawal and the new proposed point of diversion are both within the Lake Washington watershed (WRIA 8), and will not affect water quantity or water temperature in the lake. Each of the eight diversions and associated irrigation systems will be stand-alone with respect to one another. Computer control of pumping duration and pumping rate at each diversion will insure that the instantaneous diversion rate is not exceeded during the allotted eight-hour irrigation window.

To minimize impacts associated with installation and operation of the water withdrawal system, the following timing restrictions and conditions are proposed:

1) No in-water work associated with system installation would occur from 15 March through 15 July for protection of fish.
2) Prior to excavation for the water pump utility vaults, sediment control fencing would be installed between the work area and the shoreline.
3) Installation of the intake lines would be completed from atop existing piers, from a small boat adjacent to an existing pier, or by divers in the water.
4) Pump intake shall be screened to prevent entry of fish (adult and juvenile).
5) Screened intake shall consist of a facility with enough surface area to ensure that the velocity through the screen is less than 0.4 feet per second. The terminal end of the water intake pipe would be fitted with a 50 gallon-per-minute self-cleaning strainer (see Appendix C).
6) Water intake shall be located at least 18 inches above the bottom of the lake, underneath an existing pier, and point upward.
7) Piping shall run underneath an existing pier, either attached to the bottom of the pier (preferred) or on the lake bed (acceptable, but not preferred) and extend to the second-to-last piling of the pier if the water depth is greater than 10 feet at the point, or the last piling if the water is less than 10 feet deep.
8) The pump shall be located on land.
9) An approved measuring device shall be installed and maintained for each diversion point and water use shall be recorded weekly. Department of Ecology personnel will have access records of water use.

Installation/construction of the eight individual water withdrawal systems is expected to take one to two days. The most effective strategy for minimizing or eliminating potential construction-related impacts would be to restrict construction to periods when the presence of bull trout, chinook salmon, coho salmon, or steelhead is improbable. The combined fish-protection prohibitions on in-water construction by NOAA Fisheries, USFWS and WDFW result in an allowable in-water construction window of 16 July to 14 March. This window is adequate to minimize the probability that bull trout, chinook salmon, coho salmon, or

steelhead would be in the action area during construction. Additionally, the proposed implementation conditions are sufficient to avoid or minimize project-related turbidity. Thus, temporary water-quality impacts associated with the proposed project are unlikely to result in the take of a listed or sensitive fish species.

2. Habitat Health (vegetated shallows): The small workboat or the divers could disturb vegetated shallows during installation of the water intake lines. Vegetated shallows provide refuge and foraging habitat for juvenile salmonids and forage fish. Boat activity in or adjacent to vegetated shallows has been documented to damage and/or destroy habitat (Fonseca et al. 1998). The typical depths at which the construction vessel or the divers would be operating are sufficient to prevent grounding or significant disturbance of the substrate. In such circumstances that the substrate was disturbed, however, the disturbance would be small, as they would be caused by a diver walking along the lakebed. Thus, impacts to vegetated habitat are insignificant and/or discountable.

3. Direct Mortality: The potential to kill bull trout, chinook salmon, steelhead, or coho salmon exists as long as they are present in the action area during installation or during operation of the water withdrawal system. In order to minimize the impacts of installation on these salmonids, the above timing restriction (no in-water construction at a minimum from 15 March through 15 July) would be followed. This restriction is adequate to minimize the probability that juvenile salmonids would be in the action area during installation. In order to avoid any impacts associated with operation of the system, all water intake lines will be fitted with self-cleaning screens, water intake velocities will not exceed 0.4 feet per second, and diversion points will be located beneath an existing pier at least 18 inches above the substrate and point upward.

Indirect Effects on Salmonids

The effects resulting from the water withdrawal system that occur later in time could include changes in habitat quality and availability, and changes in foraging conditions for juvenile salmonids and the aquatic organisms they feed on at the shoreline.

1. Habitat (changes in refuge, foraging, and migration conditions for juvenile salmonids in the action area resulting from installation and operation of the water withdrawal system): The water withdrawal systems will not physically change the current configuration of any shoreline areas, and will not affect refuge, foraging, or migration conditions for juvenile salmonids. Operation of the system (i.e. water withdrawals during the irrigation season) will not result in any change to water quantity or quality in Lake Washington because these water rights are currently being exercised, and both the current and proposed points of water diversion are located in WRIA 8. Additionally, operation of the proposed system will not result in an enlargement of the existing water right. A very slight but potential benefit associated with the project is that all of the water right (95.5 million gallons per year) will be left in the aquifer to flow through Carillon Creek. Additional water in the aquifer may help reduce water temperatures and increase discharge, thus enhancing stream conditions for fish in the lower stream and around the outlet.

Other Effects

For all other pathways and indicators not specifically mentioned above, the activity would not alter the present environmental baseline.

Collective Effects

The incorporation of impact minimization measures (intake location and screening specifications) outlined in the WDFW Hydraulic Project Approval reduces the collective impact of the proposed project. Operation of the system will entail a change in the point of water diversion within WRIA 8, but will not change the amount of water that is being taken from the watershed. All water withdrawals under the proposed system will be recorded and the Washington Department of Ecology will have access to these records. These proposed timing restrictions and conditions would minimize the potential for installation or operation-related impacts. Thus, the proposed project:

- **may affect, not likely to adversely affect, Puget Sound chinook salmon;**
- **may affect, not likely to adversely affect, Puget Sound steelhead;**
- **may affect, not likely to adversely affect, Coastal-Puget Sound bull trout; and**
- **would not jeopardize Puget Sound-Strait of Georgia coho salmon.**

6.2 Bald Eagle

As previously mentioned, the nearest nesting bald eagle pair is approximately 1,200 feet from Waverly Beach Park. Bald eagle habitat would not be destroyed by the project, nor would prey abundance be reduced. Populations of wildlife species preyed on by bald eagles, such as waterfowl, would not be affected.

The proposed project implementation activities do not entail any loud equipment, pile driving, or blasting. All work will be at or well below ambient noise levels. Seven of the eight project sites are farther than 0.5 mile from a nest site. Accordingly, work is not restricted during the foraging period or breeding periods. The proposed project:

- **may affect, not likely to adversely affect, foraging and breeding bald eagles.**

7. Critical Habitat

7.1 Chinook Salmon

Critical habitat was designated for Puget Sound chinook salmon on 2 September 2005 (U.S. Federal Register), specifically including the Lake Washington sub-basin (Watershed Code 1711001203). Critical habitat includes areas with physical or biological features essential to the conservation of the species and which may require special management considerations or protection. Primary constituent elements of chinook salmon critical habitat are listed as:

1. Freshwater spawning sites with water quantity and quality conditions and substrate supporting spawning, incubation and larval development;
2. Freshwater rearing sites with water quantity and floodplain connectivity to form and maintain physical habitat conditions and support juvenile growth and mobility; water quality and forage supporting juvenile development; and natural cover such as shade, submerged and overhanging large wood, log jams and beaver dams, aquatic vegetation, large rocks and boulders, side channels, and undercut banks;
3. Freshwater migration corridors free of obstruction with water quantity and quality conditions and natural cover such as submerged and overhanging large wood, aquatic vegetation, large rocks and boulders, side channels, and undercut banks supporting juvenile and adult mobility and survival;
4. Estuarine areas free of obstruction with water quality, water quantity, and salinity conditions supporting juvenile and adult physiological transitions between fresh- and saltwater; natural cover such as submerged and overhanging large wood, aquatic vegetation, large rocks and boulders, and side channels; and juvenile and adult forage, including aquatic invertebrates and fishes, supporting growth and maturation.
5. Nearshore marine areas free of obstruction with water quality and quantity conditions and forage, including aquatic invertebrates and fishes, supporting growth and maturation; and natural cover such as submerged and overhanging large wood, aquatic vegetation, large rocks and boulders, and side channels.
6. Offshore marine areas with water quality conditions and forage, including aquatic invertebrates and fishes, supporting growth and maturation.

Project activities that introduce or remove physical elements to and/or from Lake Washington, or that contribute to short-term changes in water quality, may alter certain primary constituent elements (Table 2). For the proposed project, these include installation of the water withdrawal system and ongoing operation of the system.

Table 2. Assessment of Primary Constituent Elements for Chinook Salmon.

Primary Constituent Elements	Direct, Indirect, Interrelated and Interdependent Effects
1. Freshwater spawning	Typically N/A in a lake environment. Chinook salmon rarely spawn in Lake Washington. The proposed project involves installing pumps and intake lines beneath existing piers, then diverting water directly from Lake Washington rather than taking it from an aquifer that discharges to Carillon Creek and ultimately into Lake Washington. Water quantity and quality would not be affected.
2. Freshwater rearing	The proposed project will not affect freshwater rearing. Pumps and water intakes, as well as operation of the water withdrawal system incorporate all fish protection criteria detailed in the HPA. Both the current and proposed water diversion points are located within WRIA 8, and operation of the system will not increase the total amount of water used. Water quantity and quality will not be affected

Primary Constituent Elements	Direct, Indirect, Interrelated and Interdependent Effects
3. Freshwater migration	Water pumps will be sited landward of the OHWM, and intake lines will be installed beneath existing piers. The water diversion point at each site will be located at least 18 inches above the substrate, off-shore in water over 10 feet deep, screened, and pointed upward. These systems will not affect fish migration.
4. Estuarine areas	The project would have no effect on estuarine areas.
5. Nearshore marine areas	The project would have no effect on nearshore marine areas.
6. Offshore marine areas	The project would have no effect on offshore marine areas.

The action areas could be used for rearing and foraging, and are considered part of an essential migratory corridor for chinook salmon. Proposed impact minimization measures (such as screening water intakes and controlling the rate of withdrawal) will prevent any impacts to near shore foraging and migratory conditions for juvenile chinook salmon. Given the direct, indirect, interrelated, and interdependent effects from the proposed action, the proposed project:

- **would not adversely modify the critical habitat of the Puget Sound chinook salmon.**

7.2 Coho Salmon

Critical habitat has not been proposed for coho salmon.

7.3 Steelhead

Critical habitat has not been proposed for the Puget Sound steelhead.

7.4 Bull Trout

The action area includes critical habitat for bull trout, which has been defined for lakes as "the perimeter of the water body as mapped on standard 1:24,000 scale maps" (U.S. Federal Register, 26 September 2005). The action area is in the *Puget Sound Unit* (Unit 28), *Lake Washington CHSU* (critical habitat subunit). Bull trout critical habitat includes these primary constituent elements (excerpted from the final rule, U.S. Federal Register, 26 September 2005):

1. Water temperatures ranging from 36 to 59 [deg]F (2 to 15 [deg]C), with adequate thermal refugia available for temperatures at the upper end of this range. Specific temperatures within this range will vary depending on bull trout life history stage and form, geography, elevation, diurnal and seasonal variation, shade, such as that provided by riparian habitat, and local groundwater influence;
2. Complex stream channels with features such as woody debris, side channels, pools, and undercut banks to provide a variety of depths, velocities, and instream structures;
3. Substrates of sufficient amount, size, and composition to ensure success of egg and embryo overwinter survival, fry emergence, and young-of-the-year and juvenile survival. A minimal amount of fine substrate less than 0.25 in (0.63 cm) in diameter and minimal substrate embeddedness are characteristic of these conditions;

4. A natural hydrograph, including peak, high, low, and base flows within historic ranges or, if regulated, a hydrograph that demonstrates the ability to support bull trout populations by minimizing daily and day-to-day fluctuations and minimizing departures from the natural cycle of flow levels corresponding with seasonal variation;
5. Springs, seeps, groundwater sources, and subsurface water connectivity to contribute to water quality and quantity;
6. Migratory corridors with minimal physical, biological, or water quality impediments between spawning, rearing, overwintering, and foraging habitats, including intermittent or seasonal barriers induced by high water temperatures or low flows;
7. An abundant food base including terrestrial organisms of riparian origin, aquatic macroinvertebrates, and forage fish;
8. Few or no nonnative predatory, interbreeding, or competitive species present; and
9. Permanent water of sufficient quantity and quality such that normal reproduction, growth and survival are not inhibited.

According to the Federal Register, Lake Washington and Lake Union "provides FMO [foraging, migratory and overwintering] habitat for amphidromous bull trout outside of currently delineated core areas in the Puget Sound Recovery Unit." Project activities that introduce or remove physical elements from the lake, or that contribute to short-term changes in water quality, may alter certain primary constituent elements. For the proposed project, these include installation of the water withdrawal system and ongoing operation of the system (Table 3). The action area is suitable for foraging and overwintering habitat, and may be part of an essential migratory corridor for amphidromous bull trout.

Table 3. Assessment of Primary Constituent Elements for Bull Trout.

Primary Constituent Elements (PCEs)	Direct, Indirect, Interrelated and Interdependent Effects
1. Water temperature	The project would have no effect on water temperature.
2. Complex stream channel	NA in a lake environment.
3. Substrate	NA in a lake environment. Bull trout do not spawn in Lake Washington.
4. Natural hydrograph	The project will not result in an increase in water use in the Lake Washington watershed and have no effect on the hydrograph (which has reduced importance in a lake environment).
5. Spring, seeps, groundwater sources and subsurface water connectivity	The project may enhance groundwater spring flows in the Carillon Creek Subwatershed because the proposed point of diversion will be located in Lake Washington instead of the aquifer supplying water to the headwaters of Carillon Creek.
6. Migratory corridors with minimal physical, biological, or water quality impediments between spawning, rearing, overwintering and foraging habitats	The proposed project would not create any barrier to migration, particularly as lake bull trout are larger fish that are not as subject to predation-pressure and are as such not as shoreline oriented.
7. Abundant food base	The project would have no effect on food supplies.
8. Few or no nonnative predatory, interbreeding, or competitive species	The proposed project is not expected to increase populations of any predatory, interbreeding or competitive species.

Primary Constituent Elements (PCEs)	Direct, Indirect, Interrelated and Interdependent Effects
9. Permanent water of sufficient quantity and quality such that normal reproduction, growth and survival are not inhibited.	The project has the potential to produce turbid water from disturbed uplands for a short time during utility vault installation. However, the project would be constructed during approved timing windows and would employ sediment fencing to catch turbid water. Operation of the system would not result in decreases to the quantity or quality of water in Lake Washington.

Given the direct, indirect, interrelated, and interdependent effects from the proposed action, the proposed project:

- **would not adversely modify critical habitat of the Coastal-Puget Sound bull trout.**

7.5 Bald Eagle

Critical habitat has not been proposed or designated for the bald eagle.

8. Essential Fish Habitat

Discussions regarding essential fish habitat (EFH) related to Pacific salmon in Lake Washington are indirectly included in this BE. The information below identifies where these discussions are located within the BE and concludes with a determination of effect. In accordance with the comments from the USACE and prior concurrence letters from NOAA Fisheries, this discussion should be considered sufficient to make this determination.

Description of the Project / Proposed Activity: The project description and location are described within the first two sections of the BE. This description gives a thorough explanation of the construction plan and activities. The proposed project area is located within the Lake Washington Hydrologic Unit (USGS Code 17110012), which has EFH designations for chinook, coho and pink salmon.

Potential Adverse Effects of the Proposed Project: The following is a description of Pacific salmon EFH as per the federal Fisheries Management Plan (FMP). EFH for the Pacific coast salmon fishery means those waters and substrate necessary for salmon production needed to support a long-term sustainable salmon fishery and salmon contributions to a healthy ecosystem. To achieve that level of production, EFH includes all those streams, lakes, ponds, wetlands, and other currently viable water bodies and most of the habitat historically accessible to salmon in Washington, Oregon, Idaho and California. Freshwater EFH for Pacific salmon includes all those streams, lakes, ponds, wetlands, and other water bodies currently, or historically accessible to salmon in Washington, Oregon, Idaho, and California, except areas upstream of certain impassable man-made barriers (as identified by the PFMC), and longstanding, naturally-impassable barriers (i.e. natural waterfalls in existence for several hundred years).

Potential impacts to Pacific salmon EFH, as described in the BE in Section 6, include potential impacts associated with the installation of the water withdrawal systems and ongoing operation of the systems (Table 3).

EFH Conservation Measures: The following impact minimization measures are being incorporated into the proposed project in order to reduce the collective impact.

1) No in-water work associated with system installation would occur from 15 March through 15 July for protection of fish.
2) Prior to excavation for the water pump utility vaults, sediment control fencing would be installed between the work area and the shoreline.
3) Installation of the intake lines would be completed from atop existing piers, from a small boat adjacent to an existing pier, or by divers in the water.
4) Pump intake shall be screened to prevent entry of fish (adult and juvenile).
5) Screened intake shall consist of a facility with enough surface area to ensure that the velocity through the screen is less than 0.4 feet per second. The terminal end of the water intake pipe would be fitted with a 50 gallon-per-minute self-cleaning strainer (see Appendix C).
6) Water intake shall be located at least 18 inches above the bottom of the lake, underneath an existing pier, and point upward.
7) Piping shall run underneath an existing pier, either attached to the bottom of the pier (preferred) or on the lake bed (acceptable, but not preferred) and extend to the second-to-last piling of the pier if the water depth is greater than 10 feet at the point, or the last piling if the water is less than 10 feet deep.
8) The pump shall be located on land.
9) An approved measuring device shall be installed and maintained for each diversion point and water use shall be recorded weekly. Department of Ecology personnel will have access records of water use.

Conclusion: All of the proposed project's potential impacts on chinook, coho and pink salmon EFH are considered collectively. While some negative effects could potentially be associated with installing and operating eight water withdrawal systems in Lake Washington, the proposed impact minimization measures will sufficiently counter any potential detrimental effects. Thus, the collective impact of the proposed project:

- **may affect, not likely to adversely effect, Pacific salmon EFH.**

9. Cumulative Impacts

Cumulative impacts were assessed through the review of aerial photos, a review of the Report of Examination for Change to a Portion of a Water Right Claim (DOE 2006), and a site visit. At present, public parks administered by the City of Kirkland inhabit the eight sites where water withdrawal systems will be installed and operated. All parks currently have irrigation infrastructure installed including sprinklers, electronic irrigation schedulers, and back-flow prevention devices that are tested annually. The only portion of the irrigation system that will need to be constructed to allow for Lake Washington water to be utilized will be the intake pipe,

pump, a structure to house the pump, electrical connections, and a water line connecting the pump to the irrigation controller. There are no significant wildlife habitats or special habitat elements present on the property that would be disturbed by any foreseeable activity.

Waterward of the OHW in the action area at each park, future activities include boating, swimming, and fishing. Projection of activities not under federal regulation on properties adjacent to the action area is speculative at best. Changes in presently ongoing activities are not expected. Therefore, cumulative impacts (as defined in the ESA) on sensitive fish and wildlife species and their habitats are not considered significant.

10. Determination of Effect

Determination of effect for all species and their respective assessment areas are listed in Table 4. The proposed project may affect, not likely to adversely affect, Puget Sound chinook salmon, Coastal-Puget Sound bull trout, and Puget Sound steelhead trout, and is not likely to jeopardize and Puget Sound-Strait of Georgia coho salmon. The proposed project may affect, not likely to adversely affect, the bald eagle.

Given the direct, indirect, interrelated, and interdependent effects from the proposed action, the proposed project would not adversely modify the critical habitat of the Puget Sound chinook salmon or the Coastal-Puget Sound bull trout.

The collective impact of the proposed project may affect, not likely to adversely affect, Pacific chinook salmon and coho salmon EFH.

Table 4. Determinations of Effect.

Species	Overall Project Effect	Effect on Critical Habitat	Effect on EFH
Puget Sound Chinook Salmon	May affect, not likely to adversely affect	Would not adversely modify	May affect, not likely to adversely affect
Coastal-Puget Sound Bull Trout	May affect, not likely to adversely affect	Would not adversely modify	N/A
Puget Sound-Strait of Georgia Coho Salmon	Not likely to jeopardize	N/A	May affect, not likely to adversely affect
Puget Sound Steelhead	May affect, not likely to adversely affect	N/A	N/A
Bald Eagle	May affect, not likely to adversely affect	N/A	N/A

References

Beak Consultants Incorporated. 1998. Final Lakepointe Technical Report on Natural Resources. Section 3.0 Fisheries. Prepared for Pioneer Towing, Kenmore, WA, April 1998. 108 p.

Beauchamp, D.A. and M. Koehler. 2004. Modeling consumption and growth performance of juvenile chinook salmon in Lake Washington. Lake Washington Basin Chinook Salmon Workshop. Seattle, WA. February 2, 2004.

Busby, P.J., T.C. Wainwright, G.J. Bryant, et al. 1996. Status review of west coast steelhead from Washington, Idaho, Oregon, and California. National Oceanographic and Atmospheric Administration Tech. Memo. NMFS-NWFSC-27.

Fonseca, M.S., W.J. Kenworthy, and G.W. Thayer. 1998. Guidelines for the conservation and restoration of seagrasses in the United States and adjacent waters. NOAA Coastal Ocean Program Decision Analysis Series No. 12. NOAA Coastal Ocean Office, Silver Springs, MD. 222 pp.

Fresh, K.L., D. Rothaus, K.W. Mueller, and C. Waldbilig. 2003. Habitat utilization by smallmouth bass in the littoral zones of Lake Washington and Lake Union/Ship Canal. 2003 Greater Lake Washington Chinook Workshop, 2002 Update and Synthesis. January 24, 2003. http://cityofseattle.net/salmon/workshop.htm.

Fresh, Kurt. Fisheries Biologist, Washington Department of Fish and Wildlife. Personal communication, telephone conversations with Tom Kahler (The Watershed Company), 28 March 2000 and 15 April 2002.

Goetz, Fred. Fishery Biologist, U.S. Army Corps of Engineers, Seattle District. Personal communication, e-mail to Dan Nickel (The Watershed Company), 14 May 2004.

Kerwin, J. 2001. Salmon and steelhead habitat limiting factors report for the Cedar-Sammamish basin (Water Resource Inventory Area 8). Washington Conservation Commission, Olympia, WA. 587 pages.

Myers, J.M., R.G. Kope, G.J. Bryant, D. Teel, L.J. Lierheimer, T.C. Wainwright, W.S. Grant, F.W. Waknitz, K. Neely, S.T. Lindley, and R.S. Waples. 1998. Status review of chinook salmon from Washington, Idaho, Oregon, and California. U.S. Dept. Commer., NOAA Tech. Memo. NOAA Fisheries-NWFSC-35. 443 p.

Negri, Steve. Habitat biologist, Washington Department of Fish and Wildlife. Personal communication, telephone conversation with Amy Myers (The Watershed Company), 2 September 1999.

Roberson, K. 1967. An occurrence of chinook salmon beach spawning in Lake Washington. Trans. Am. Fish. Soc. 96: 423-424.

Tabor, R.A., Gearns, H.A., McCoy III, C.M., and S. Camacho. 2006. Nearshore habitat use by juvenile chinook salmon in lentic systems of the Lake Washington Basin. 2003 and 2004 annual report. US Fish and Wildlife Service, Lacey, WA.

Tabor, R.A., Scheurer, J.A., Gearns, H.A., and E.P. Bixler. 2004. Nearshore habitat use by juvenile chinook salmon in lentic systems of the Lake Washington Basin. 2002 annual report. US Fish and Wildlife Service, Lacey, WA.

Tabor, R.A., M.T. Celedonia, F. Mejia, R.M. Piaskowski, D.L. Low, B. Footen, and L. Park. 2004. Predation of juvenile chinook salmon by predatory fishes in three areas of the Lake Washington basin. 2004 Greater Lake Washington Chinook Workshop, City of Seattle, WA. 86 pages.

Tabor, R.A. 2003. Juvenile Chinook Preferred Lakeshore and Ship Canal Habitat: 2002 Results. 2003 Greater Lake Washington Chinook Workshop, 2002 Update and Synthesis. January 24, 2003. http://cityofseattle.net/salmon/workshop.htm.

Tabor, R.A., and R.M. Piaskowski. 2002. Nearshore habitat use by juvenile chinook salmon in lentic systems of the Lake Washington Basin, U.S. Fish and Wildlife Service Annual Report 2001. April 2002, Seattle Public Utilities, City of Seattle, WA. 57 pp.

USACE, National Marine Fisheries Service (NOAA Fisheries), and U.S. Fish and Wildlife Service (USFWS). 2001. Special Public Notice: Endangered Species Act Guidance for New and Replacement Piers and Bulkheads in Lake Washington, Lake Sammamish, and the Ship Canal, Including Lake Union. 11 pp.

U.S. Federal Register Volume 72, No. 91, 11 May 2007, Final rule. Endangered and Threatened Species: Final listing determination for Puget Sound Steelhead - *Oncorhynchus mykiss*.

_____ Volume 70, No. 123, 28 June 2005, Final rule. Endangered and Threatened Species: Final listing determinations for 16 ESUs of West coast salmon, and final 4(d) protective regulations for threatened salmonid ESUs - *Oncorhynchus tshawytscha*.

_____ Volume 70, No. 170, 2 September 2005, Final rule. Endangered and Threatened Species; Designation of critical habitat for 12 evolutionarily significant units of west coast salmon and steelhead in Washington, Oregon, and Idaho - *Oncorhynchus tshawytscha*.

_____Volume 70, No. 185, 26 September 2005, Final rule. Endangered and Threatened Wildlife and Plants; Designation of critical habitat for the bull trout.

_____ Volume 64, No. 210, 1 November 1999, Final rule. Endangered and Threatened Wildlife and Plants; Determination of threatened status for bull trout (*Salvelinus confluentus)* in the coterminous United States.

_____ Volume 69, No. 73, 15 April 2004, Notice of establishment of species of concern list. Endangered and Threatened Species; Establishment of species of concern list, addition of species to species of concern list, description of factors for identifying species of concern,

and revision of candidate species list under the Endangered Species Act. Puget Sound/Strait of Georgia coho salmon (*Oncorhynchus kisutch*).

_____ Volume 64, No. 128, 6 July 1999, proposed rule - *Haliaeetus leucocephalus*

_____ Volume 60, No. 133, 12 July 1995, final rule - *Haliaeetus leucocephalus*

Washington Department of Ecology (DOE). 2006. Report of examination for change to a portion of a water right claim to appropriate public waters of the State of Washington. Report by Andrew B. Dunn. September 19, 2006.

Washington Department of Fish and Wildlife (WDFW). 2006. Priority Habitats and Species database search results prepared for The Watershed Company, 17 March 2006.

Washington Department of Fish and Wildlife (WDFW). 2002. *Washington State Salmonid Stock Inventory (SaSI)*. Stock Reports.

Washington Department of Fisheries (WDF), Washington Department of Wildlife, and Western Washington Treaty Indian Tribes. 1993. 1992 Washington State salmon and steelhead stock inventory. March 1993. Olympia, WA. 212 p.

Appendix A

WATER RIGHT DOCUMENTATION

Appendix C:
Civil Plans

FloBoy

Project

Help

Project Name	Newcastle Beach	Anticipated Bid Date	12/07/2007
		Phone	425-452-5221
Company	City of Bellevue	Email	sburgess@ci.b
Name	Scott Burgess	Fax	
Address 1	16023 NE 8th Street		
Address 2			
Address 3			
City,St,Zip	Bellevue Washington 98009		
Country	USA	Project Type	Municipal
Project Notes:			

Configuration

Suction Type:	Lift w/Reprime System		
Speed:	Variable Speed	Flow Rate:	90 gpm
Outlet Pressure: (Ft PSI)	85 psi		
Vertical Lift (ft):	10		
Voltage:	230		
HorsePower:	10		
System Start/Stop:	Pressure Start, Flow Stop		
Phase:	Single Phase		Include Startup in Price

FloBoy Options

- [ ] Red Alarm Light
- [ ] External Flowmeter
- [ ] REMOVE Aluminum Enclosure
- [x] Surge Arrestor
- [ ] Suction Isolation Valve
- [ ] Expansion Tank - Non ASME
- [ ] Expansion Tank - ASME

List Price:	$20212.00
Options:	$910.00
Subtotal:	$21122.00
Freight:	$646.00
Startup:	$0.00
MSRP:	$21768.00

FloBoy Model: FBSLV5BF10F23F1E

After providing the information above, click the button

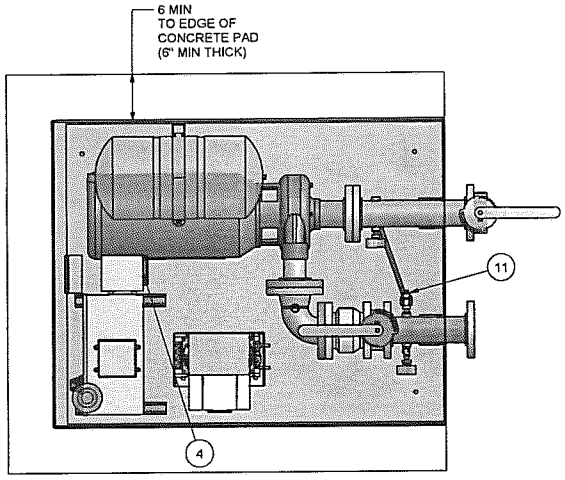

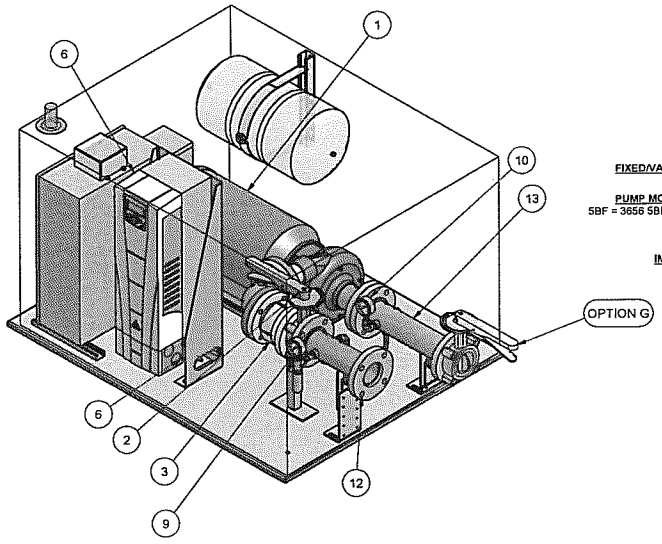

FLOBOY MODEL DEFINITION

EXAMPLE

FB S L V 8SH 25 A 46 R 3 BC

MODEL
FB

SIZE
SMALL

GEOMETRY
L = LIFT

FIXED/VARIABLE SPEED
V = VFD

PUMP MODEL (GOULDS)
5BF = 3656 5BF MODEL PUMP

PUMP HP
25 = 25 HP

IMPELLER CODE
EXAMPLE:
A = 6.90"
B = 6.35"
C = 6.50"

SYSTEM VOLTAGE
46 = 460V
23 = 230V
20 = 208V

START/STOP
R = RELAY
P = PRESSURE

PHASE
1 = 1Φ
3 = 3Φ

OPTIONS
B = EXTERNAL FLOWMETER
C = IRRIGATION RELAYS (UP TO 4 RELAYS)
E = SURGE ARRESTOR
G = SUCTION MANIFOLD ISOLATION VALVE
H = EXPANSION TANK, NON-ASME
J = EXPANSION TANK, ASME (ASME RATING REQUIRED FOR SYSTEM UL LISTING)

NOTES:

1. DO NOT USE FOR CONSTRUCTION PURPOSES UNLESS CERTIFIED.
2. DIMENSIONS SHOWN ARE MINIMUM RECOMMENDED CLEARANCES FROM PUMP STATION TO EDGE OF SLAB.
3. SLAB DIMENSIONS AND MATERIAL REQUIREMENTS ARE THE MINIMUM REQUIRED BY FLOWTRONEX ONLY. IT IS THE INSTALLATION CONTRACTOR'S RESPONSIBILITY TO MEET ANY FEDERAL, STATE, AND/OR LOCAL CODES WHICH EXCEED THE REQUIREMENTS OF THIS DOCUMENT.
4. ALLOW 42" CLEARANCE CLEAR TO THE GOUND IN FRONT OF THE CONTROL PANEL PER NEC 20.
5. THIS DRAWING SHOWS ALL OPTIONS AND DOES INDICATE ACTUAL OPTIONS PURCHASED. REFERENCE PROPOSAL FOR LIST OF OPTIONS PURCHASED.

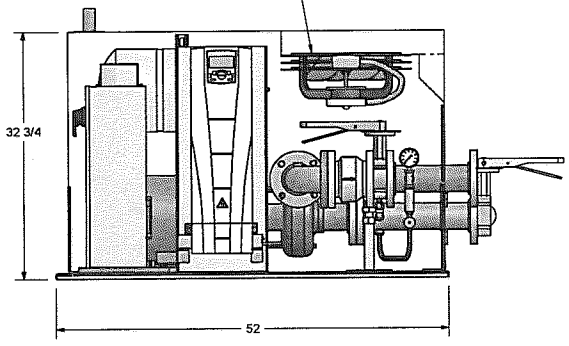

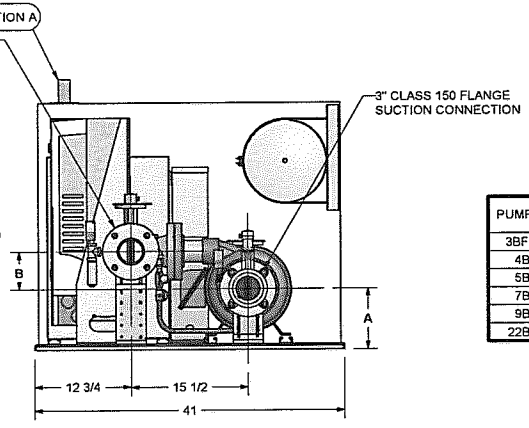

PUMP	A				B
	143-5	182-4	213-5	254-6	
3BFH	5 3/8	6 3/8	—	—	3 1/2
4BF			7 1/8	—	4
5BF				8 1/8	4 1/4
7BF					5
9BF			—	—	4 1/4
22BF			—	—	4

HP	1Φ FRAME ODP	1Φ FRAME TEFC	1Φ MAX DRAW (A) 208V	1Φ MAX DRAW (A) 230V	3Φ FRAME ODP	3Φ FRAME TEFC	3Φ MAX DRAW (A) 208V	3Φ MAX DRAW (A) 230V	3Φ MAX DRAW (A) 460V
3	182JM	182JM	24	21	145JM	182JM	16	14	7
5	182JM	182JM	36	32	182JM	184JM	22	20	10
7 1/2	213JM	—	49	44	184JM	213JM	30	26	13
10	215JM	—	60	54	213JM	215JM	36	32	16
15	—	—	—	—	215JM	254TCZ	52	46	23
20	—	—	—	—	254TCZ	256TCZ	65	58	29
25	—	—	—	—	256TCZ	256TCZ	80	72	29

SYM	QTY	P/N	DESCRIPTION
13	1	520-000-052	ASSY. - MANIFOLD, ZINC PLATED, 3"x16"
12	1	520-000-060	ASSY. - MANIFOLD, ZINC PLATED, 3"x12"
11	1	580-000-100	ASSY. - REPRIME LINE (LIFT STATION ONLY)
11	1	74-100-023	FAN, EXHAUST, 1320CFM
10	1	88-001-030	GAGE, WIKA, 2-1/2", 30"-0-30 PSI
9	1	88-001-008	GAGE, WIKA, 2-1/2", 0-160 PSI
8	1	—	PRESSURE TRANSDUCER
7	1		HEAT EXCHANGER, ENVIRO-INTERCEPT
6	1	—	VARIABLE FREQUENCY DRIV, ABB ACS550
5	1	—	DISCONNECT PANEL
4	1	400-020-100	TRANSFORMER, 1kVa
3	1	19-002-015	VALVE, CHECK, GLOBE, 3"
2	1	21-001-030	VALVE, BUTTERFLY, LUG, 3"
1	1	—	PUMP, GOULDS 3656 / MOTOR, 3600 RPM

BOM

Flowtronex
ITT Industries
Engineered for life
10661 NEWKIRK STREET, DALLAS, TEXAS 75220, USA 1-800-786-7480

JOB NO.
JOB NAME
PROPOSAL NUMBER
DRAWN BY: M. MARTINEZ
REV
SIZE B
DATE DRAWN: 7/24/2003
SHEET #

Self Cleaning Pump Suction Screen Specifications

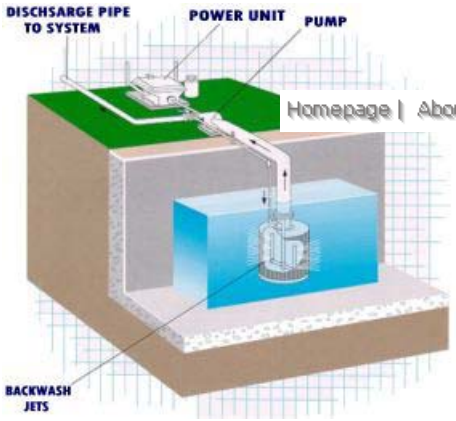

- Pump suction screens are not orientation sensitive and may be installed vertically, angled, or horizontally.
- Units should be installed in a moving water source to assure that contaminant that is washed off the suction screen is carried away form the suction line area.

SPECIFICATIONS

MODEL	SERVICE FLOW RATES		FLOW m^3/HR.		SCREEN LENGTH	TOTAL LENGTH	SCREEN DIA	FLANGE SIZE	RETURN INLET	MIN. PRESS	WEIGHT (lbs.)	SPRAY (GPM)
	10&18 MESH	30 MESH	10&18 MESH	30 MESH								
CW200	325	225	73.8	51.1	11"	25"	16"	4"	1 1/2"	35	58	20
CW400	550	400	124.9	90.8	15"	28.8"	16"	6"	1 1/2"	40	62	20
CW600	750	525	170.3	119.2	16"	32.5"	24"	8"	1 1/2"	40	102	20
CW800	950	700	215.7	158.9	18"	34.5"	24"	10"	1 1/2"	45	115	20
CW1000	1350	950	306.5	215.7	23"	39.5"	24"	10"	1 1/2"	50	123	24
CW1400	1650	1200	374.6	272.4	26"	42.5"	24"	12"	1 1/2"	55	131	24
CW1700	1950	1400	442.7	317.8	28"	44.5"	26"	12"	1 1/2"	55	148	24
CW2000	2350	1650	533.5	374.6	32"	48.5"	26"	14"	1 1/2"	60	160	24
CW2400	2600	1800	590.2	408.6	35"	52.5"	30"	16"	1 1/2"	65	223	28

MORE INFO

©2007 Yardney Water Management Systems, Inc. • All Rights Reserved | Toll Free: 1-800-854-4788 | Tel: 951-656-6716 | SITE MAP | CREDITS