City of Bellevue
Development Services Department
Land Use Staff Report

Proposal Name:	**East Creek Rehabilitation**
Proposal Address:	**13451 SE 27th Place**
Proposal Description:	The applicant requests a Critical Areas Land Use Permit in order to remove 120 feet of illegally installed culvert from a portion of East Creek, restore the stream bed and restore the riparian corridor with native vegetation. Associated with Enforcement Action # 07-131972-EA
File Number:	**08-129544-LO**
Applicant:	**Paul Vedmed, PN Properties LLC**
Decisions Included:	Critical Areas Land Use Permit (Process II. LUC 20.30P)
Planner:	**Kevin LeClair**, Planner
State Environmental Policy Act Threshold Determination:	**Determination of Non-Significance** Carol V. Helland, Environmental Coordinator Development Services Department
Director's Decision:	**Approval with Conditions** Carol V. Helland, Land Use Director Development Services Department

Application Date:	August 21, 2008
Notice of Application Publication Date:	September 18, 2008
Decision Publication Date:	January 15, 2009
Project/SEPA Appeal Deadline:	January 23, 2009

For information on how to appeal a proposal, visit Development Services Center at City Hall or call (425) 452-6800. Comments on State Environmental Policy Act (SEPA) Determinations can be made with or without appealing the proposal within the noted comment period for a SEPA Determination. Appeal of the Decision must be received in the City's Clerk's Office by 5 PM on the date noted for appeal of the decision.

DEPARTMENT OF PLANNING AND COMMUNITY DEVELOPMENT
ENVIRONMENTAL COORDINATOR
450 100th Ave NE., P.O. BOX 90012
BELLEVUE, WA 98009-9012

DETERMINATION OF NON-SIGNIFICANCE

PROPONENT: Paul Vedmed, PN Properties LLC

LOCATION OF PROPOSAL: 13451 SE 27th Place

NAME & DESCRIPTION OF PROPOSAL:

The applicant requests a Critical Areas Land Use Permit in order to remove 120 feet of illegally installed culvert from a portion of East Creek, restore the stream bed and restore the riparian corridor with native vegetation. Associated with Enforcement Action # 07-131972-EA.

FILE NUMBER: 08-129544-LO

The Environmental Coordinator of the City of Bellevue has determined that this proposal does not have a probable significant adverse impact upon the environment. An Environmental Impact Statement (EIS) is not required under RCW 43.21C.030(2)(C). This decision was made after the Bellevue Environmental Coordinator reviewed the completed environmental checklist and information filed with the Land Use Division of the Department of Planning & Community Development. This information is available to the public on request.

☐ There is no comment period for this DNS. There is a 14-day appeal period. Only persons who submitted written comments before the DNS was issued may appeal the decision. A written appeal must be filed in the City Clerk's office by 5:00 p.m. on March 16, 2006.

X This DNS is issued after using the optional DNS process in WAC 197-11-355. There is no further comment period on the DNS. There is a 14-day appeal period. Only persons who submitted written comments before the DNS was issued may appeal the decision. A written appeal must be filed in the City Clerk's Office by 5 p.m. on January 29, 2009.

☐ This DNS is issued under WAC 197-11-340(2) and is subject to a 14-day comment period from the date below. Comments must be submitted by 5 p.m. on _____. This DNS is also subject to appeal. A written appeal must be filed in the City Clerk's Office by 5 p.m. on _____.

This DNS may be withdrawn at any time if the proposal is modified so that it is likely to have significant adverse environmental impacts; if there is significant new information indicating, or on, a proposals probable significant adverse environmental impacts (unless a non-exempt license has been issued if the proposal is a private project): or if the DNS was procured by misrepresentation or lack of material disclosure.

Environmental Coordinator

January 15, 2009
Date

OTHERS TO RECEIVE THIS DOCUMENT:
State Department of Fish and Wildlife
State Department of Ecology,
Army Corps of Engineers
Attorney General
Muckleshoot Indian Tribe

CONTENTS

I. Proposal Description ..... Pg 3

II. Site Description, Zoning & Land Use Context ..... Pg 3

III. Consistency with Land Use Code Requirements ..... Pg 5

IV. Public Notice & Comment ..... Pg 7

V. Technical Review ..... Pg 7

VI. State Environmental Policy Act (SEPA) ..... Pg 8

VII. Changes to Proposal Due to Staff Review ..... Pg 9

VIII. Decision Criteria ..... Pg 10

IX. Decision ..... Pg 13

X. Conditions of Approval ..... Pg 14

I. Proposal Description

The applicant requests a Critical Areas Land Use Permit in order to remove 120 feet of illegally installed culvert from a portion of East Creek, restore the stream bed and restore the riparian corridor with native vegetation. The Critical Areas Land Use Permit is associated with Enforcement Action # 07-131972-EA.

The Land Use Code (LUC) 20.25H.080.B.1, states, "a stream channel shall not be modified by relocating the open channel, or by closing the channel through pipes or culverts unless in connection with," uses allowed under LUC 20.25H.055. East Creek, a "Type F" stream, was placed in a culvert by the applicant without of the City of Bellevue. The removal of the culvert, restoration of the stream channel to an open configuration and restoration of the riparian corridor is allowed as a "habitat improvement project" with a Critical Areas Land Use Permit accompanied by a Critical Areas Report per LUC 20.25H.080.B.2.

II. Site Description, Zoning, Land Use and Critical Areas

A. Site Description

The project site is on a portion of East Creek, east of Richards Road, south of Kamber Road (SE 26th Street) on parcel numbers 545330-0146 (A&M Auto), 545330-0139 (Bellevue Auto Detail), 545330-0150 (HD Fowler). See Attachment 1 – Vicinity Map.

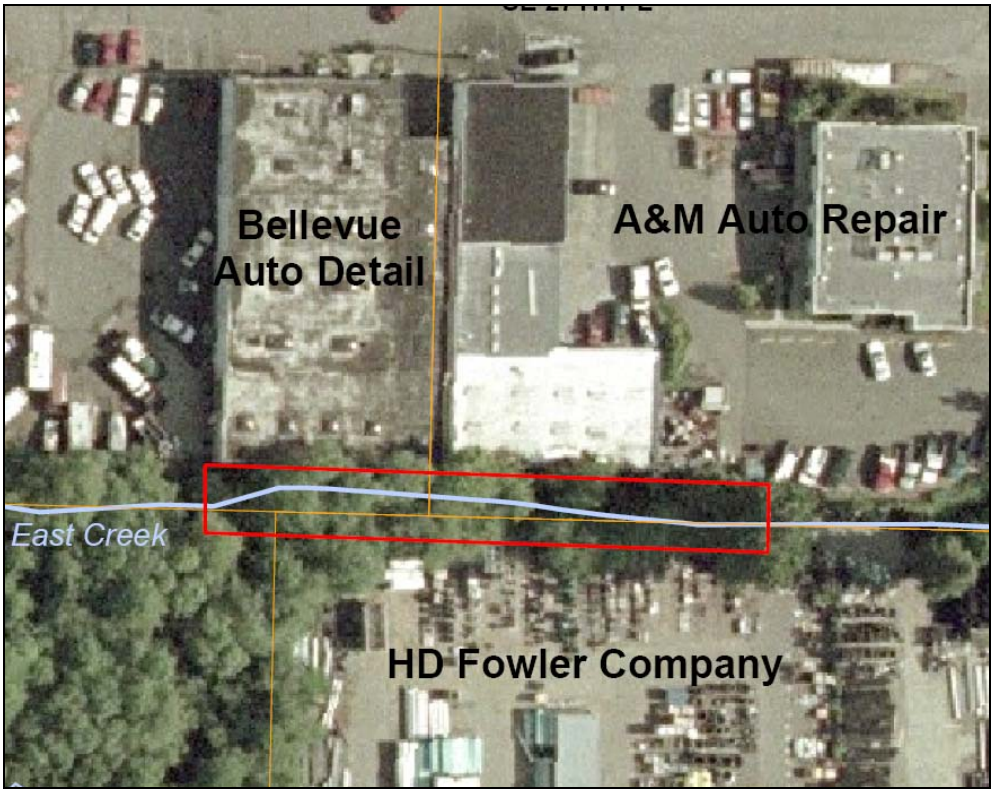

B. Zoning

The property is zoned Light-Industrial (LI). The general dimensional standards in

LUC 20.20.010 do not apply, because there is no structural development proposed. The existing uses on the affected properties are permitted and there is no proposed change in use of the properties.

C. Land Use Context

The project site and surrounding properties are designated light-industrial in the Comprehensive Plan. The two properties to north (A&M Auto and Bellevue Auto Detail) are both automotive repair and washing services. The property to the south (HD Fowler) is a commercial irrigation equipment supplier. There are some large undeveloped wetlands areas adjacent to East Creek to the west and to the east of the project area.

D. Critical Areas Functions and Values

1. Streams and Riparian Areas

Most of the elements necessary for a healthy aquatic environment rely on a dynamic interaction between the stream and the adjacent riparian area. The closure of streams in pipes or culverts interrupts this relationship and severely degrades, if not completely eliminates, the functions and values provided.

Riparian vegetation in along stream banks mitigates the impacts of urbanization and support healthy stream conditions. Riparian vegetation affects water temperature by providing shade to reduce solar exposure and regulate high ambient air temperatures, slowing or preventing increases in water temperature.

Upland and wetland riparian areas retain sediments, nutrients, pesticides, pathogens, and other pollutants that may be present in runoff, protecting water quality in streams. The roots of riparian plants also hold soil and prevent erosion and sedimentation that may affect spawning success or other behaviors, such as feeding.

Both upland and wetland riparian areas reduce the effects of flood flows. Riparian areas and wetlands reduce and desynchronize peak crests and flow rates of floods. Upland and wetland areas can infiltrate flood flows, which in turn, are released to the stream as base flow.

Stream riparian areas, or buffers, can be a significant factor in determining the quality of wildlife habitat. For example, buffers comprised of native vegetation with multi-canopy structure, snags, and down logs provide habitat for the greatest range of wildlife species. Vegetated riparian areas also provide a source of large woody debris that helps create and maintain diverse in-stream habitat, as well as create woody debris jams that store sediments and moderate flood velocities.

Sparsely vegetated or vegetated buffers with non-native species may not perform the needed functions of stream buffers. In cases where the buffer is not well vegetated, it is necessary to either increase the buffer width or require that the standard buffer

width be restored or revegetated. Until the newly planted buffer is established the near term goals for buffer functions may not be attained.

Riparian areas often have shallow groundwater tables, as well as areas where groundwater and surface waters interact. Groundwater flows out of riparian wetlands, seeps, and springs to support stream baseflows. Surface water that flows in to riparian areas during floods or as direct precipitation infiltrates into groundwater in riparian areas and is stored for later discharge to the stream.

III. Consistency with Land Use Code Requirements

A. Zoning District Dimensional Requirements

The property is zoned Light-Industrial (LI). The general dimensional standards in LUC 20.20.010 do not apply, because there is no structural development proposed.

B. Critical Areas Requirements LUC 20.25H

1. Performance Standards for Habitat Improvement Projects LUC 20.25H.055.C.3.j

Disturbance, clearing and grading are allowed in the critical area or critical area buffer for habitat improvement projects demonstrating an improvement to functions and values of a critical area or critical area buffer when the project is approved by the Director pursuant to a Critical Areas Report.

A Critical Areas Report consistent with LUC 20.25H.230 has been prepared by David Evans and Associates Inc. A discussion of how the critical areas report satisfies the critical areas report decision criteria can be found below.

2. Consistency Critical Areas Performance Standards

The performance standards for streams described in LUC 20.25H.080.A, will be met as a condition of approval of the subsequent clearing and grading permit to implement the stream rehabilitation.

The performance standards for the modification of a stream channel described in LUC 20.25H.080.B require the preparation of a critical areas report for a habitat improvement project that proposes to modify the stream channel in connection with a habitat improvement project, as allowed under LUC 20.25H.055. A critical areas report has been prepared by David Evans and Associates Inc. A discussion of how the critical areas report satisfies the critical areas report decision criteria can be found below.

The performance standard for uses in habitat associated with species of local importance described in LUC 20.25H.160 state that a proposal shall implement the wildlife management plan developed by the Department of Fish and Wildlife for such species or meet the requirements of LUC 20.25H.165. The applicant has prepared a

critical areas report containing an habitat assessment evaluating the both direct and indirect impacts to wildlife habitat in the project area and describing avoidance, minimization and mitigation techniques to satisfy the requirements of LUC 20.25H.165.

3. Consistency with Critical Areas Report LUC 20.25.230.

The applicant supplied a complete critical areas report prepared by David Evans and Associates, a qualified professional. The report met the minimum requirements in LUC 20.25H.250 as determined by the director. The critical areas report contained items discussed below.

The critical areas report contained an accurate depiction of the critical areas on the site and those properties immediately adjacent to the site in a graphical format on the site plans. The buffers were shown common with the primary structures on the site per LUC 20.25H.035.B. All the work is within the critical area and between the critical area and the existing primary structures on the site.

The critical areas report then discussed probable habitat and water quality impacts resulting from the proposed project.

4. Consistency with Critical Areas Report – Additional provisions LUC 20.25H.220.

Since the project is a restoration project associated with the removal of an illegally installed stream culvert, the critical areas report contained a mitigation and restoration plan that satisfied the requirements of LUC 20.25H.220. It contains a set of goals and objectives, performance standards for fish passage and habitat and an associated monitoring plan, performance standards for plant establishment and maintenance, and an associated monitoring plan.

The critical areas report also contains a turbidity monitoring plan and a fish salvage plan to be implemented when the project is underway.

IV. Public Notice and Comment

Application Date: August 21, 2008
Public Notice (500 feet): September 18, 2008
Minimum Comment Period: October 2, 2008

The Notice of Application for this project was published in the City of Bellevue weekly permit bulletin on September 18, 2008, which was advertised in Seattle Times on the same day. The weekly permit bulletin was mailed to property owners within 500 feet of the project site.

One comment was received regarding this project. It was from Karen Walter with the Muckleshoot Indian Tribe Fisheries Division. The comment requested the following items be revised:

- Additional large woody material be placed in the restored stream,

This comment is addressed through the condition of approval that any of the significant trees in the project area that must be removed for removal of the culvert and regrading of the stream channel be used as large woody debris in the project area. There will also be additional pieces of large woody debris placed in the restoration area to enhance the habitat function of the project. See Condition of Approval in Section X.

- Native plant restoration area be expanded to compensate for the lost vegetation in the riparian area from the installation of the culvert,

This comment is addressed by expanding the native plant restoration up to within three feet of the façade of the building.

- Maintenance and monitoring period be extended to 10 years, and

The required monitoring for a restoration plan shall not be reduced to less than three years. The applicant is proposing a monitoring plan for a period of five years, which is sufficient and meets the requirements of the code.

- Removal of the concrete pads and toxic storage equipment from the south side of structure adjacent to East Creek and the restoration area.

The used oil tank and heating oil system on the south side of the structure will be retrofitted to protect it from the weather and secondary containment wall will be constructed around the footprint of the equipment to prevent contamination of the riparian area and to limit access to the area. See Condition of Approval in Section X.

V. Summary of Technical Reviews

Clearing and Grading

The Clearing and Grading Division of the Planning and Community Development Department has reviewed the proposed site development for compliance with Clearing and Grading codes and standards. The Clearing and Grading staff found no issues with the proposed development.

VI. State Environmental Policy Act (SEPA)

The environmental review indicates no probability of significant adverse environmental impacts occurring as a result of the proposal. The Environmental Checklist submitted with the application adequately discloses expected environmental impacts associated with the project. The City codes and requirements, including the Clear and Grade Code, Utility Code, Land Use Code, Noise Ordinance, Building Code and other construction codes are expected to mitigate potential environmental impacts. Therefore, issuance of a Determination of Non-Significance (DNS) is the appropriate threshold determination under the State Environmental Policy Act (SEPA) requirements.

A. Earth and Water

A grading plan that includes temporary erosion and sedimentation control best management practices is included in the project plans, and addresses all requirements for restoring the site to a condition equal to or better than its previous condition before the culvert was illegally installed. Erosion and sediment control best management practices include the installation of erosion control blankets, straw wattles and covering exposed soils to prevent migration of soils to the adjacent downstream wetlands. The proposal also includes a turbidity monitoring plan and a plan for de-watering the stream during the instream regrading of the channel. The applicant will also be required to submit information regarding the use of pesticides, insecticides, and fertilizers to avoid impacts to water resources. See Section X for a related condition of approval.

B. Animals

The project site is part of type F stream and riparian area and is adjacent to larger natural areas that contains quality habitat for birds and mammals. Fisheries resources in East Creek may include anadromous and resident species, although no salmon spawners have been documented by City of Bellevue observers in recent years. East Creek has identified by the WDFW as containing priority resident fish presence including resident coastal cutthroat trout. The action of placing the stream in a culvert severely impacts the potential of the project area to support fish resources.

The proposal includes a fish salvage plan that will ensure fish resources in the project reach are protected.

Due to the relatively small project area and a dearth of significant native vegetation, it is unlikely the project area is being used as primary habitat for any species. The project area may function as a habitat corridor and refuge. Several significant trees are proposed to be removed, therefore some short-term impacts are expected. The restoration will be modified to retain these trees if possible, unless they are determined to be hazardous. The resulting the large woody debris from these trees will be retained in the riparian area. The restoration plan will also be modified to

include the installation of at least 5 trees that have the potential to become significant in order to mitigate for these anticipated impacts.

C. Plants

The existing plant community in the project area is primarily reed canary grass, Himalayan blackberry and red alder. The non-native reed canary grass and Himalayn blackberry will be eliminated and replace with native plant species. There no rare or threatened plant species identified in or near the project area. The proposed mitigation and restoration plan, when satisfactorily completed and maintained will result in no adverse impact. See Section X for related conditions of approval.

D. Noise

The site is adjacent to single-family residences whose residents are most sensitive to disturbance from noise during evening, late night and weekend hours when they are likely to be at home. Construction noise will be limited by the City's Noise Ordinance (Chapter 9.18 BCC) which regulates construction hours and noise levels. See Section X for a related condition of approval.

VII. Changes to proposal as a result of City review

The following items will be revised as a condition of approval on the underlying Clearing and Grading permit:

1. Increase in area of native plant restoration area up to edge south side of A&M Auto building.

2. Retention of 5 alder trees proposed for removal unless their removal is necessary to alleviate hazardous condition. If trees must be removed because of hazardous condition, the large woody debris will be left to lie in ground contact in the riparian area.

3. Remodeling of used oil storage on south side of A&M Auto building to protect it from weather and to prevent contamination of the riparian zone.

4. Modification to the any exterior lighting on the south side of the A&M Auto building to eliminate light from entering the critical area and critical area buffer.

5. Modification of the ingress/egress door on the south side of the A&M Auto building to prevent exit in less in case of emergency.

6. Inclusion of an appropriate number of pieces of large woody debris in to the restoration area, in addition to the pieces of alder tree mentioned in point 2 above.

VIII. Decision Criteria

A. Critical Areas Report Decision Criteria- General Criteria LUC 20.25H.255

The Director may approve, or approve with modifications, the proposed modification where the applicant demonstrates:

1. The modifications and performance standards included in the proposal lead to levels of protection of critical area functions and values at least as protective as application of the regulations and standards of this code;

Finding: The proposed project is not proposing the modification of any of the standards contained in the Land Use Code. Rather, it is implementing a mandatory restoration of a segment of East Creek that was illegally place in a culvert to alleviate flooding on the properties to the north of the stream. The preexisting condition was severely degraded and access to the critical area with potentially harmful materials was practically uninhibited. The functions and values of the riparian area and stream will be significantly enhanced through native plant restoration and the re-opening of the stream channel. These actions, in addition to the containment of the oil storage area on the south side of the building, will lead to a increased level of protection of the functions and values of this stream and riparian area. The following tables detail the consideration for key functions and values related to Salmonid habitat. On balance, the overall condition of the stream reach will be improved.

Function and/or Value	Indicator	PROJECT EFFECTS TO BASELINE CONDITIONS
Water Quality	Temperature	**Improve**. Over the long-term, the project will improve the temperature indicator if the riparian buffer enhancements succeed.
	Sediment	**Maintain.** This conclusion is based on implementation of BMPs, turbidity monitoring plan, and monitoring during construction activities.
	Chemical Contamination and Nutrients	**Maintain**. No change in chemical contamination and nutrients is anticipated to result from this project.
Habitat Access	Physical Barriers	**Improve.** The removal of the existing culvert, silt fence, and debris jam will improve the possibility of fish migration upstream.
Habitat Elements	Substrate	**Degrade ↔ Maintain.** The project may degrade the substrate indicator during construction at the local scale.
	LWD	**Maintain.** No in-stream LWD will be removed during construction as none is currently present in the project reach.
	Pool Frequency	**Improve**. Pool Frequency is anticipated to increase as a result of this project via roots of riparian buffer plantings. Tree roots from the riparian buffer contribute to pool formation in other reaches of East Creek (Bellevue 2003).
	Pool Quality	**Maintain.** No change in Pool Quality is anticipated to result from this project.
	Off-Channel Habitat	**Maintain**. No change in the off-channel habitat indicator is anticipated to result from implementation of this project.
	Refugia	**Maintain.** Returning the stream channel to a daylighted condition will maintain the refugia indicator.

Channel Conditions and Dynamics	Width/Depth Ratio Streambank Condition Floodplain Connectivity	**Maintain**. No change in Width/Depth Ratio indicator is anticipated to result from implementation of this project. **Degrade → Maintain.** The stream bank in the project reach will be degraded during construction and this impact will continue until plants installed along the banks of the pond become established. Once established, this indictor will generally be maintained. **Maintain.** No change in the floodplain connectivity indicator is anticipated to result from implementation of this project.
Flow/Hydrology	Change in Peak/Base Flows Increase in Drainage Network	**Maintain.** No change in peak/base flow is anticipated. **Maintain.** The implementation of this project will return the drainage network to its original condition.
Watershed Conditions	Road Density and Location Disturbance History Riparian Reserve	**Maintain.** No new roads are required as the project. **Degrade**. Construction will result in an increase in the amount of disturbance to East Creek at the local scale. **Maintain.** The riparian reserve indicator in the project reach will be maintained as no trees will be cut as a result of this project.
Bull Trout Subpopulation Characteristics within Subpopulation Watersheds	Subpopulation Size Growth and Survival Life History Diversity and Isolation Persistence and Genetic Integrity Species Integration/Habitat Conditions	**Maintain**. No change in the subpopulation size indicator is anticipated. Maintain. No change in the growth and survival indicator is anticipated. Maintain. No change in the life history diversity and isolation indicator is anticipated. Maintain. No change in the persistence and genetic integrity indicator is anticipated. Maintain. No change in the species integration/habitat conditions indicator is anticipated.

2. Adequate resources to ensure completion of any required mitigation and monitoring efforts;

Finding: To ensure adequate resources are available to perform the required restoration and monitoring, both a performance assurance device and a maintenance assurance device will be collected and held by the City until the applicant demonstrates successful performance according to the approved monitoring plan contained in the critical areas report.

3. The modifications and performance standards included in the proposal are not detrimental to the functions and values of critical area and critical area buffers off-site; and

Finding: The proposal does not include a modification of the prescribed buffers on the site. The proposed performance standards are consistent with those in the land use code. The proposed project will be beneficial to the functions and values of the critical area and critical area buffer off-site because it will increase the habitat structure and diversion

4. The resulting development is compatible with other uses and development in the same land use district.

Finding: The proposal to remove 120-feet of corrugated plastic pipe from a section of East Creek and restore the degraded area with native plantings is compatible with the light-industrial uses in the area.

B. Critical Areas Land Use Permit Decision Criteria 20.30P

The proposal, as conditioned below, meets the applicable regulations and decision criteria for a Critical Areas Land Use Permit pursuant to LUC Section 20.30P.

1. The proposal obtains all other permits required by the Land Use Code;

Finding: The proposed project will require a Clearing and Grading Permit from the City of Bellevue. No work on the project will be allowed to commence until the Clearing and Grading permit in addition to permits from other state and federal agencies.

2. The proposal utilizes to the maximum extent possible the best available construction, design and development techniques which result in the least impact on the critical area and critical area buffer;

Finding: The applicant hired the services of David Evans and Associates to prepare a critical areas report and stream and riparian restoration plan. The plan was developed under the direction of a Fish and Wildlife Biologist and is based on the following objectives:

- Returning East Creek to a daylighted condition by removing the illegally placed 120-foot culvert,
- Rehabilitation of the in-stream habitat by restoring the gravel substrate,
- Revegetation of the riparian buffer of East Creek with native vegetation
- Minimize the potential for flooding of the A&M Auto building by removing an abandoned silt-fence from the stream and regrading the stream channel to a positive slope.

The design of the restoration proposal considered hydrologic conditions that prompted the property owner to seek relief from the flooding by installing the culvert and seeks to address this issue while also factoring in the presence of habitat of species of local importance and the potential for the site to provide functions and values.

3. The proposal incorporates the performance standards of Part 20.25H to the maximum extent applicable, and ;

Finding: As discussed above in Section II, the proposal does incorporate the applicable performance standards, which will be implemented and enforced as conditions of approval the underlying Clearing and Grading Permit. See Section X for Conditions of Approval.

4. The proposal will be served by adequate public facilities including street, fire protection, and utilities; and;

Finding: The property is currently served by adequate public facilities. The proposal does not change the need for, or ability to serve the property.

5. The proposal includes a mitigation or restoration plan consistent with the requirements of LUC Section 20.25H.210; and

Finding: The proposal includes a mitigation and restoration plan consistent with LUC 20.25H.210. It contains a set of goals and objectives, a stream rehabilitation plan, a buffer planting plan, a turbidity monitoring plan and a fish salvage plan.

The mitigation and restoration plan also include performance standards and monitoring schedules for fish passage and plant establishment for a period of five years.

6. The proposal complies with other applicable requirements of this code.

Finding: As discussed in Section IV & V of this report, the proposal complies with all other applicable requirements of the Land Use Code.

IX. Conclusion and Decision

After conducting the various administrative reviews associated with this proposal, including Land Use Code consistency, SEPA, City Code and Standard compliance reviews, the Director of Planning and Community Development does hereby **approve with conditions** the proposal to remove 120 feet of illegally installed culvert from a portion of East Creek, restore the stream bed and restore the riparian corridor with native vegetation at **13451 SE 27th Place**.

Note- Expiration of Approval: In accordance with LUC 20.30P.150 a Critical Areas Land Use Permit automatically expires and is void if the applicant fails to file for a Clearing and Grading Permit or other necessary development permits within one year of the effective date of the approval.

X. Conditions of Approval

The applicant shall comply with all applicable Bellevue City Codes and Ordinances including but not limited to:

Applicable Ordinances	Contact Person
Clearing and Grading Code- BCC 23.76	Tom McFarlane, 425-452-5207
Land Use Code- BCC 20.25H	Kevin LeClair, 425-452-2928
Noise Control- BCC 9.18	Kevin LeClair, 425-452-2928

The following conditions are imposed under the Bellevue City Code or SEPA authority referenced:

1. Restoration for Areas of Temporary Disturbance: The conceptual plan submitted for this review will be finalized and implemented for all areas of temporary disturbance. The final plan is required to be submitted for review and approval by the City of Bellevue prior to the issuance of the Clearing and Grading Permit. The plan shall include the documentation of existing site conditions and shall identify the restoration measures to return the site to its existing conditions per LUC 20.25H.220.H. The final restoration plan will, at a minimum, meet the standards set forth in the City of Bellevue Critical Areas Handbook.

Authority: Land Use Code 20.25H.220.H
Reviewer: Kevin LeClair, Land Use Division

2. Rainy Season restrictions: Due to the proximity to East Creek, a type F stream, no clearing and grading activity may occur during the rainy season, which is defined as November 1 through April 30 without written authorization of the Department of Planning and Community Development. Should approval be granted for work during the rainy season , increased erosion and sedimentation measures, representing the best available technology must be implemented prior to beginning or resuming site work.

Authority: Bellevue City Code 23.76.093.A
Reviewer: Tom McFarlane, Development Services Department

3. Pesticides, Insecticides, and Fertilizers: The applicant must submit as part of the required Clearing and Grading Permit information regarding the use of pesticides, insecticides, and fertilizers in accordance with the City of Bellevue's "Environmental Best Management Practices."

Authority: Land Use Code 20.25H.220.H
Reviewer: Kevin LeClair, Land Use Division

4. Noise Control: The proposal will be subject to normal construction hours of 7 am to 6 pm Monday through Friday and 9 am to 6 pm on Saturdays, except for Federal holidays and as further defined by the Bellevue City Code. Upon written request to PCD, work hours may be extended to 10 pm if the criteria for extension of work hours as stated in BCC 9.18 can be met.

Authority: Bellevue City Code 9.18
Reviewer: Kevin LeClair, Land Use Division

5. Performance and Maintenance Assurance Devices: Prior to approval of the underlying clearing and grading permit, the applicant shall submit a performance assurance device and a subsequent maintenance assurance devices. The assurance devices assure all restoration and mitigation actions required by this permit are satisfactorily completed and successfully established following a five year time period.

The Performance Assurance Device shall be an amount equivalent to 150% of the value of the installed materials and labor approved on the restoration and mitigation plan. The Performance Assurance Device will be released to applicant after the work covered in the restoration and mitigation plan has been completed to the satisfaction of the City and a the Maintenance Assurance Device has been received by the City.

The Maintenance Assurance Device shall be an amount equivalent to 100% of the value of the installed materials and labor approved on the restoration and mitigation plan. The Maintenance Assurance Device will be released after the City receives the final monitoring report stating the restoration plan has met or exceed the performance standards stated in the restoration and mitigation plan.

Authority: Land Use Code 20.40.490
Reviewer: Kevin LeClair, Land Use Division

6. Temporary Erosion and Sedimentation Control Plan: Prior to approval of the underlying clearing and grading permit and initiation of any clearing or grading activities, a Temporary Erosion and Sedimentation Control Plan must be approved as part of a Clearing and Grading permit and all clearing limits and the location of temporary erosion and sedimentation control measures shall be field staked for approval by the on-site clearing and grading inspector's approval.

Authority: Bellevue City Code 23.76
Reviewer: Tom McFarlane, Development Services Department

7. Turbidity Monitoring Plan: Prior to approval of the underlying clearing and grading permit and initiation of any clearing and grading activities, a Turbidity Monitoring Plan must be approved as part of the Clearing and Grading Permit.

Authority: Bellevue City Code 23.76
Reviewer: Tom McFarlane, Development Services Department

8. Performance Standards for Streams 20.25H.080.A: Prior to approval of the underlying clearing and grading permit, the following stream critical area performance standards will be met through modifications to the restoration and mitigation plan as identified below:

a. Any exterior lighting on the south façade of the A&M Auto building shall be disabled unless it can be shown to be required for emergency reason

b. The openings on the south side of the A&M Auto building shall be use only for emergency exit in order to prevent noise from the interior activities that generates noise.

c. Provide for weather coverage and secondary containment fluid storage equipment and material from the south side of A&M Auto building and increase designed restoration planting area to encompass the restoration of this area as well.

Authority: Land Use Code 20.30P.140.C
Reviewer: Kevin LeClair, Land Use Code

9. Applicable State and Federal Permits: Prior to approval of the underlying clearing and grading permit and before work can be allowed to proceed, all applicable state and federal permits must be presented to the Development Services Department.

Authority: Land Use Code 20.25H.180.C.2
Reviewer: Kevin LeClair, Planning and Community Development Department

10. In-Water Work Window: Work in the active channel approved by the underlying Clearing and Grading Permit must be completed during an in-water work window of July 1 through August 31 unless otherwise permitted in writing by the Washington Department of Fisheries and Wildlife.

Authority: Land Use Code 20.25H.160
Reviewer: Kevin LeClair, Land Use Division

11. Large Woody Debris in Restoration Area: The project restoration plan shall be revised for the Clearing and Grading Permit to include the incorporation of any large woody debris that is generated by the removal of any significant trees deemed to be necessary to achieve the channel configuration identified in the project plans. In addition to the large woody debris harvested from the project site, the project plans shall be revised to include an appropriate number and size of pieces to enhance the habitat function of the project.

Authority: Land Use Code 20.30P.140E
Reviewer: Kevin LeClair, Land Use Division

Attachments

1. Vicinity Map
2. Critical Areas Report
3. Environmental Checklist

4. Site, Grading, and Mitigation and Restoration Plan

Attachment 1
Vicinity Map

Attachment 2
Critical Areas Report

A&M AUTO
EAST CREEK TRIBUTARY
REHABILITATION PROJECT
CRITICAL AREAS REPORT

Bellevue, Washington

Prepared For:
A&M AUTO
13451 SE 27th Place
Bellevue, Washington 98005

Prepared By:
DAVID EVANS AND ASSOCIATES, INC.
415 - 118th Avenue SE
Bellevue, Washington 98005-3553

AMIN0000-0001

August 2008

A&M AUTO
EAST CREEK TRIBUTARY
REHABILITATION PROJECT
CRITICAL AREAS REPORT

Bellevue, Washington

Prepared For:
A&M AUTO
13451 SE 27th Place
Bellevue, Washington 98005

Prepared By:
DAVID EVANS AND ASSOCIATES, INC.
415 - 118th Avenue SE
Bellevue, Washington 98005-3553

Prepared by:

Jim Shannon
Sr. Fish and Wildlife Biologist

AMIN0000-0001

August 2008

TABLE OF CONTENTS

1.0 INTRODUCTION **1**

2.0 PROJECT DESCRIPTION **4**
2.1 Methods 4
2.1.1 Preliminary Data Gathering and Review *4*
2.1.2 Field Investigation *5*

3.0 RESULTS **6**
3.1 Preliminary Data Gathering and Review 6
3.1.1 WDFW PHS Data *6*
3.1.2 WDNR NHP Data *6*
3.1.3 East Creek Stream Habitat *6*
3.1.4 Wetlands *7*
3.1.5 U.S. Department of Agriculture Soil Data *8*
3.1.6 Amphibians and Reptiles *8*
3.1.7 Mammals *8*
3.1.8 Birds *9*
3.1.9 Federally Listed Species *11*
3.1.10 Floodplains *12*
3.2 Field Investigation 12
3.2.1 Wetlands *12*
3.2.2 Streams *12*
3.2.3 Uplands *13*
3.2.4 Wildlife *13*

4.0 HABITAT IMPACTS **14**
4.1 Salmonid Habitat Effects Matrix 14
4.2 Impacts to Species of Local Importance 15
4.2.1 Coho Salmon *15*
4.2.2 Great Blue Heron *16*
4.2.3 Red Tailed Hawk *16*
4.3 Wildlife impacts 16
4.4 Water Quality Impacts 16
4.4.1 Conservation and Performance Measures *17*

5.0 MITIGATION **19**
5.1 Mitigation Plan 19
5.1.1 Goals and Objectives *19*
5.1.2 Stream Rehabilitation *19*
5.1.3 Buffer Planting Plan *20*
5.2 Additional Actions 22
5.2.1 Turbidity Monitoring Plan *22*
5.2.2 Fish Salvage Plan *23*

6.0 REFERENCES **26**

LIST OF FIGURES

Figure 1: Vicinity Map 2
Figure 2: Site Map 3

LIST OF TABLES

Table 1: Amphibians and Reptiles 8
Table 2: Mammal Record Summary for T24N R05E 9
Table 3: Breeding Bird Summary for T24N R05E 10
Table 4: East Creek Fish Use Summary 12
Table 5: Salmonid Habitat Project Effects Matrix 14

APPENDICES

Appendix A Stream Rehabilitation Design Sheets
Appendix B USFWS Species List
Appendix C NMFS Species List
Appendix D Site Photos
Appendix E USFWS Wetlands Map
Appendix F Turbidity Monitoring Data Sheet

ACRONYMS

Acronyms	Meaning
BMPs	Best Management Practices
cfs	cubic feet per second
DEA	David Evans and Associates, Inc.
DOI	Department of the Interior
EFH	Essential Fish Habitat
ESA	Endangered Species Act
h	horizontal
LWD	large woody debris
NHP	Natural Heritage Program
NMFS	National Marine Fisheries Service
NOAA	National Oceanic and Atmospheric Administration
NWI	National Wetlands Inventory
NTU	nephelometric turbidity unit
OHWM	Ordinary High Water Mark
PHS	Priority Habitats and Species
SCS	Soil Conservation Service
Ur	Urban (land)
USDA	U.S. Department of Agriculture
USFWS	U.S. Fish and Wildlife Service
v	vertical
WDFW	Washington Department of Fish and Wildlife
WDNR	Washington State Department of Natural Resources
WRIA	Water Resource Inventory Area
WSGA	Washington State Gap Analysis

This page intentionally left blank.

1.0 INTRODUCTION

At the request of the A&M Auto, David Evans and Associates, Inc. (DEA) conducted this investigation to document the presence of critical areas, existing habitat conditions, level of potential wildlife use in the project vicinity, project-related impacts, and mitigation and monitoring requirements for the East Creek Rehabilitation Project. This investigation also evaluated Priority Habitats and Species (PHS) as identified by the Washington Department of Fish and Wildlife (WDFW), and federally listed species under jurisdiction of either the U.S. Fish and Wildlife Service (USFWS) or the National Marine Fisheries Service (NMFS) that could occur in the project vicinity.

The proposed project site is located within the city of Bellevue, Washington (Section 10, Township 24 north, Range 05 east, W.M.) (**Figures 1 and 2**). The stream rehabilitation would be located on East Creek east of Richards Road, south of SE 26th on parcel numbers 545330-0146 (A&M Auto), 545330-0139 (Bellevue Auto Detail), and 545330-0150 (HD Fowler). The project site is in Water Resource Inventory Area (WRIA) 8: Cedar – Sammamish Basin. More specifically, the project site is within the Kelsey Creek Watershed, while the approximate latitude and longitude of the central project area is 47° 35’ 56.72” N by 122° 19’ 52.9” W at an elevation of 64 feet above sea level.

The general project area is industrial and consists of numerous developed and a few undeveloped parcels. However, forested areas exists upstream and downstream of the project site. The project site consists of East Creek Tributary and its narrow riparian corridor which lie within the A&M Auto, HD Fowler, and Bellevue Auto Detail property.

In August 2007, A&M Auto received a stop work order from the City of Bellevue to halt the installation of a 120-foot 36-inch corrugated plastic pipe to convey East Creek Tributary past the A&M Auto building. East Creek Tributary flooded A&M Auto on a regular basis due to the negative slope of East Creek at the project sight. This negative slope caused stream flows to pond and enter the back doors of the A&M building. The negative slope is caused by an old silt fence which partially spans the stream channel and has created aggradation of stream bed gravels upstream.

This project will return East Creek to a daylighted condition and enhance fish and wildlife habitat while minimizing the potential of flooding the A&M Auto building. This project has the following primary objectives:

- Return East Creek Tributary to a daylighted condition by removing the existing 120-foot culvert.
- Rehabilitate stream habitat by enhancing stream gravels.
- Revegetate riparian buffers with native buffer vegetation.
- Minimize the potential for flooding of the A&M building by removing old silt fence and regrading the stream channel to a positive slope.

0 0.25 0.5 Miles

Project Boundary
Road
Stream
Freeway

A&M Auto East Creek Rehabilitation

Vicinity Map

AMIN0000-0001

Figure 1

DAVID EVANS AND ASSOCIATES INC.

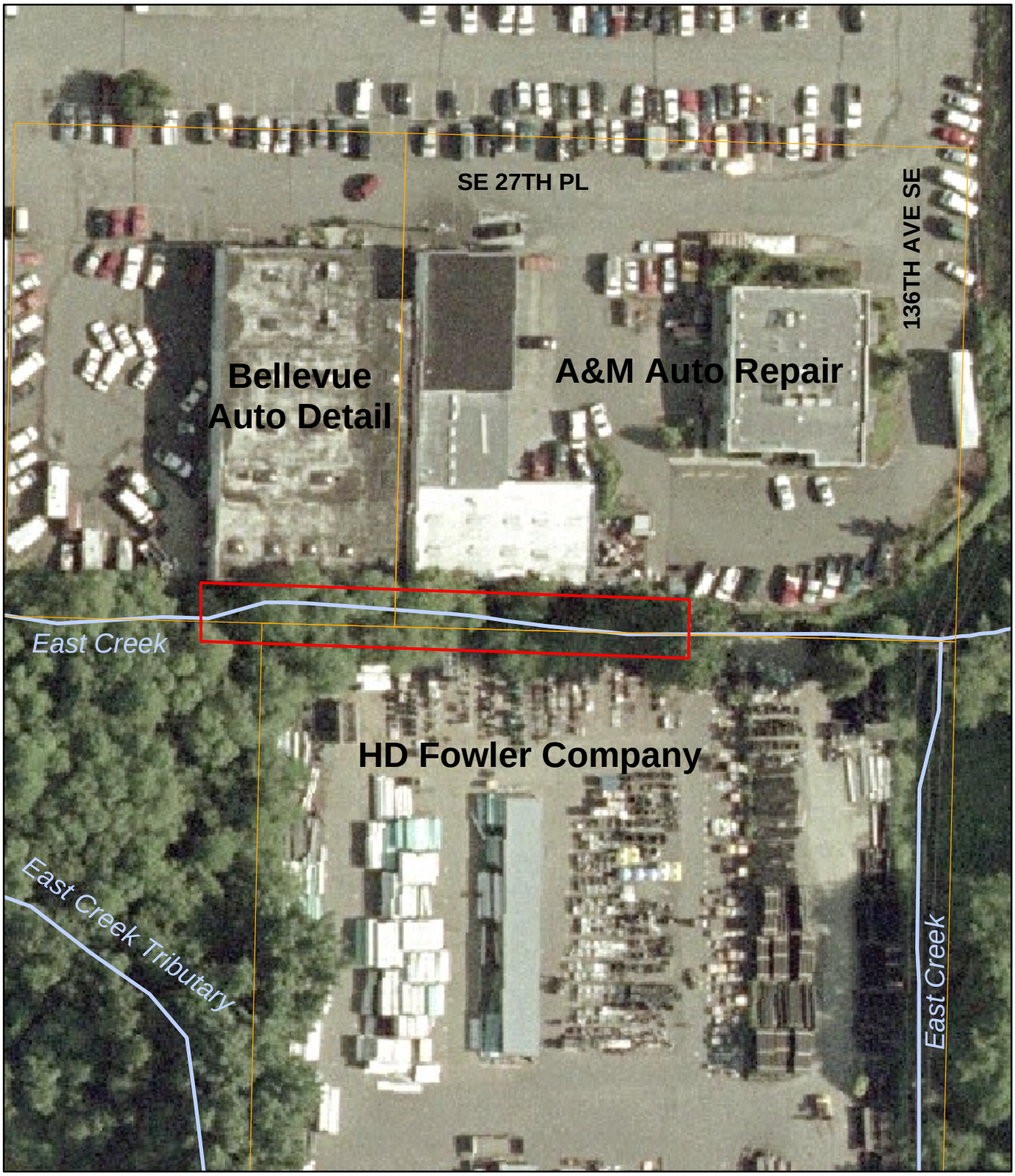

0 25 50 100 Feet

Project Boundary

Parcel Boundary

Stream

A&M Auto East Creek Rehabilitation

Site Map

AMIN0000-0001

March 2008

Figure 2

DAVID EVANS AND ASSOCIATES INC.

2.0 PROJECT DESCRIPTION

The concept for the East Creek Tributary rehabilitation was derived after evaluating constraints and opportunities of the site. The project site is extremely constrained by commercial buildings to the north and paved lots to the south. East Creek enters the project site from the east by a 30-inch 50-foot-long corrugated metal pipe.

The existing gradient of East Creek in the project site has a negative slope. This negative slope is caused by aggradation of stream gravels resulting from an old silt fence in the stream channel behind the Bellevue Automotive Detail building. Regrading of the stream channel and removal of the old silt fence is necessary in order to create a positive gradient for the stream channel.

The rehabilitation design is a 219-foot-long relatively straight stream channel with a gradient of 5 percent (**Appendix A**). The side slope of the north bank is approximately 2 horizontal (h):1 vertical (v). The south bank is sloped at 1.5 h:1 v. The streambank soil will be wrapped with a coir matting and revegetated with native trees and shrubs above the ordinary high water mark (OHWM). The daylighted stream channel will be enhanced with stream bed gravels. Planting of native vegetation along the north and south streambank will rehabilitate the riparian buffer.

Construction activities would occur during the WDFW in-water work window for East Creek in order to reduce potential impacts to salmonids. The WDFW in-water work window for East Creek extends from July 1 through August 31. Additional timing restrictions may be imposed by other agencies.

2.1 METHODS

2.1.1 Preliminary Data Gathering and Review

Existing literature and scientific data were reviewed to determine species distribution, habitat requirements, and other pertinent biological parameters specific to the project area. Published information about local critical areas was reviewed for evidence of wetlands, streams, and potential wildlife habitat. This report was prepared following the review of project plans, public domain resource data, and multiple site visits.

The USFWS was consulted for information on the known or possible occurrence of plants and animals listed under the federal Endangered Species Act (ESA) that could occur in King County. The WDFW–PHS program (WDFW 2008) and the Washington State Department of Natural Resources (WDNR) Natural Heritage Program (NHP) (WDNR 2008) were consulted for documented occurrences of priority habitats or species, rare plants, and high quality native ecosystems in the project vicinity. Priority habitats include but are not limited to such features as wetlands, riparian areas, snag-rich areas, caves, cliffs, oak woodlands, rocky shorelines, and old-growth forests. Priority species are plants and animals listed by the state or federal government as endangered, threatened, sensitive, candidate, or species of concern. The potential use of the project area by mammals, birds, amphibians, and reptiles was investigated through review of Washington State Gap Analysis (WSGA) data. The information review included:

- WDFW–PHS data;
- WDNR–NHP data;
- National Wetlands Inventory (NWI) United States Department of Interior (DOI) - Fish and Wildlife Service, Wetlands Online Mapper.
- City of Bellevue Sensitive Areas Notebook (April 1987);
- Sensitive Areas Map Folio, King County, Washington (1990);
- Bellevue Critical Areas Update Stream Inventory, March 2003;
- *A Catalog of Washington Streams and Salmon Utilization – Volume 1 – Puget Sound Region.* Washington Department of Fisheries (Williams et al. 1975);
- *Salmon and Steelhead Habitat Limiting Factors Report for the Cedar – Sammamish Basin (Water Resource Inventory Area 8)* (Kerwin 2001);
- *Breeding Birds of Washington State – Location Data and Predicted Distributions* (Smith et al. 1997);
- *Terrestrial Mammals of Washington State - Location Data and Predicted Distributions* (Johnson and Cassidy 1997);
- *Amphibians and Reptiles of Washington State - Location Data and Predicted Distributions* (Dvornich et al. 1997);
- United States Department of Agriculture (USDA) – Soil Conservation Service (SCS): *Soil Survey of the King County Area*. Washington, 1973.

2.1.2 Field Investigation

DEA performed multiple site visits during September 2007, February 2008, and June 2008 to verify preliminary data findings, flag the OHWM of East Creek, document existing habitat conditions, and document wildlife use.

3.0 RESULTS

3.1 PRELIMINARY DATA GATHERING AND REVIEW

3.1.1 WDFW PHS Data

The WDFW–PHS data did not identify any priority wildlife heritage points or priority habitat points in the immediate vicinity of the project site. There is an area upstream of the project site that is mapped as an urban natural open space and as such is considered a priority habitat. This is a relatively large polygon extending west from the HD Fowler property to the headwaters of East Creek. There is also an area downstream of the project site that is mapped as a riparian zone and is also considered a priority habitat. East Creek is identified by the WDFW as containing priority resident fish presence including resident coastal cutthroat trout (*Oncorhynchus clarki*).

3.1.2 WDNR NHP Data

The 27 rare plants identified as potentially occurring in King County by the WDNR typically have very specific habitat requirements. These range from being associated with prairie/grassland habitats, bogs and fens, freshwater wetlands or lake margins, high elevation/sub alpine habitats, old growth forests, or coniferous forests. A search of the WDNR–NHP information system did not produce any records of rare plants or high quality native ecosystems in the project vicinity. An inquiry into the WDNR self-service NHP identified no rare plants as occurring on site or in the immediate vicinity of the project area.

3.1.3 East Creek Stream Habitat

East Creek (stream number 08-0263) is approximately 2 miles long and originates in the Factoria area (City of Bellevue 2003). East Creek flows northwesterly from its headwaters on a forested hillside and joins Richards Creek just north of SE 26th Street. Stream gradients in the headwaters are very steep, up to 14.4 percent, and very gradual, 0.7 percent in the lower reaches.

Habitat conditions in East Creek are variable, but typical of most urbanized streams in that habitat conditions have been degraded. Lower segments of East Creek are channelized by roadways, parking lots, and buildings, but the upper reach of the stream flows largely through deciduous forest (City of Bellevue 2003).

Altered stream hydrology in East Creek is due to stormwater runoff from impervious areas as well as past development within the floodplain. Total impervious area in the East Creek basin is high at 48 percent. Numerous buildings, including the A&M Auto building, are built in the floodplain and constrict the stream channel.

Instream habitat of East Creek is also degraded. There are seven culverts in the upper reaches that prohibit fish passage. Sedimentation is a problem and substrates are mostly sand and small gravels. Wood and tree roots in the riparian buffer contribute to moderate pool formation in the upper segments.

Fisheries Resources. Fisheries resources in East Creek include anadromous and resident species. Coho salmon (*Oncorhynchus kisutch*) inhabit the lower segments of East Creek, and cutthroat trout can be found throughout the basin (Bellevue 2003). Western brook lamprey (*Lampetra richardsoni*) are also present. East Creek is identified by the WDFW as containing priority resident fish presence including resident coastal cutthroat trout (WDFW 2008). No salmon spawners were observed in East Creek during the salmon watcher program years 2003 and 2005 through 2007 (King County 2008).

Fish Life Histories. The following fisheries life history information is limited to species documented in East Creek.

Coho Salmon

The life history of the coho salmon varies depending on geographic location, but there are some traits that are fairly constant throughout their range. Most coho mature after spending a year to 16 months at sea. At this time, usually late summer or fall, they return to their natal spawning habitat. Coho typically spawn between the months of November and January. Subsequent emergence from the gravel usually occurs in the months of March through July. Coho juveniles sometimes spend a year or more rearing in freshwater habitats such as small tributaries, side-channel areas, or lakes. After the period of freshwater residence, smolting occurs, generally in the spring. Outmigration occurs from late March through early June, peaking in May. The current state record for the largest coho salmon captured in freshwater is 25.27 pounds.

Cutthroat Trout

Like steelhead trout, cutthroat trout have diverse life histories, including non-migratory and migratory (sea-run/anadromous). Non-migratory cutthroat can exhibit resident, fluvial, or adfluvial life histories. Cutthroat trout are one of the most widely distributed species in western Washington streams. According to Wydoski and Whitney (1979), sea-run cutthroat spawn primarily from late December to February. Most fry emerge from their redd by mid-April. Cutthroat trout may be the most abundant salmonid in East Creek.

Western Brook Lamprey

The western brook lamprey is a small (<7 inches), strictly freshwater, filter feeder that consumes microscopic organic matter. They spawn in gravel riffles by making a small nest/depression between April and July. Lamprey larvae (ammocoetes) typically utilize fine silt substrate areas. Unlike river and pacific lamprey, western brook lamprey do not prey on fish.

3.1.4 Wetlands

The NWI – Mercer Island, Washington (DOI 1988) map, City of Bellevue Sensitive Areas Notebook (April 1987), nor the King County Sensitive Areas Map Folio (King County 1990) depict any wetlands in the project area.

3.1.5 U.S. Department of Agriculture Soil Data

The USDA SCS mapped soils in the project area as Urban land (Ur) (USDA 1973). Urban land is defined as soil that has been modified by disturbance of the natural layers with additions of fill material several feet thick. The erosion hazard is slight to moderate. The USDA SCS Hydric Soils of the State of Washington (USDA 1991) list for King County does not include Ur land as a hydric soil.

3.1.6 Amphibians and Reptiles

The WSGA data for amphibians and reptiles contains limited site-specific occurrence data but includes a map for each species outlining its core and peripheral zones (Dvornich et al. 1997). These zones represent the potential distribution of each species based on the presence of suitable habitat within each zone. Therefore, the species outlined below in **Table 1** have the potential to occur in the general project area if suitable habitat is present.

Table 1: Amphibians and Reptiles

Common Name	Scientific Name	Note
Northwestern Salamander	*Ambystoma gracile*	Possibly Present
Long-toed Salamander	*Ambystoma macrodactylum*	Possibly Present
Pacific Giant Salamander	*Dicamptodon tenebrosus*	Possibly Present
Roughskin Newt	*Taricha granulosa*	Possibly Present
Western Redback Salamander	*Plethodon vehiculum*	Possibly Present
Ensatina	*Ensatina eschscholtzii*	Unlikely Present due to a lack of coniferous downed wood
Western Toad	*Bufo boreas*	Federal species of concern and state candidate
Pacific Treefrog	*Hyla regilla*	Likely Present
Red-legged Frog	*Rana aurora*	Unlikely Present
Bullfrog	*Rana catesbeiana*	Introduced
Painted Turtle	*Chrysemys picta*	Introduced, common in/near lakes
Slider	*Trachemys scripta*	Introduced, common in/near lakes
Northern Alligator Lizard	*Elgaria coerulea*	Possibly Present
Western Terrestrial Garter Snake	*Thamnophis elegans*	Possibly Present
Northwestern Garter Snake	*Thamnophis ordinoides*	Possibly Present
Common Garter Snake	*Thamnophis sirtalis*	Possibly Present
Rubber Boa	*Charina bottae*	Unlikely Present

3.1.7 Mammals

Based on a review of WSGA data (Johnson and Cassidy 1997), nine mammals have been documented in Township 24 North by Range 05 East (**Table 2**). However, this list is not all-inclusive and only includes species that were documented in the WSGA database prior to 1997.

Table 2: Mammal Record Summary for T24N R05E

Common Name	Scientific Name
Shrew-mole	*Newrotrichus gibbsii*
Townsend's Mole	*Scapanus townsendii*
Little Brown Myotis	*Myotis lucifugus*
Yuma Myotis	*Myotis yumanensis*
Eastern Gray Squirrel	*Sciurus carolinensis*
House Mouse	*Mus musculus*
Norway Rat	*Rattus norvegicus*
Coyote	*Canis latrans*
Mountain lion	*Felis concolor*

Other species not documented in the WSGA database that could potentially utilize the project vicinity include Virginia opossum (*Didelphis virginiana*), Trowbridge's shrew (*Sorex trowbridgii*), vagrant shrew (*Sorex vagrans*), coast mole (*Scapanus orarius*), California myotis (*Myotis californicus*), long-legged myotis (*Myotis volans*), hoary bat (*Lasiurus cinereus*), silver-haired bat (*Lasionycteris nocitvagans*), big brown bat (*Eptesicus fuscus*), Townsend's big-eared bat (*Plecotus townsendii*), eastern cottontail (*Sylvilagus floridnus*), mountain beaver (*Aplodontia rufa*), Townsend's chipmunk (*Tamias townsendii*), Douglas' squirrel (*Tamiasciurus douglasii*), northern flying squirrel (*Glaucomys sabrinus*), beaver (*Castor canadensis*), forest deer mouse (*Peromyscus keeni*), deer mouse (*Peromyscus maniculatus*), creeping vole (*Microtus oregoni*), Townsend's vole (*Microtus townsendii*), muskrat (*Ondatra zibethicus*), pacific jumping mouse (*Zapus trinotatus*), porcupine (*Erethizon dorsatum*), nutria (*Myocastor coypus*), black rat (*Rattus rattus*), red fox (*Vulpes vulpes*), raccoon (*Procyon lotor*), ermine (*Mustela erminea*), long-tailed weasel (*Mustela frenata*), mink (*Mustela vison*), striped skunk (*Mephitis mephitis*), spotted skunk (*Spilogale gracilis*), bobcat (*Lynx rufus*), and black-tailed deer (*Odocoileus hemionus*).

3.1.8 Birds

Based on a review of WSGA data, 75 bird species could potentially nest in the general area in or adjacent to T24N R05E (Smith et al. 1997). This determination is based on combining confirmed, probable, and possible breeding evidence. It is important to note that the species listed in **Table 3** are not necessarily associated with the project area but could potentially utilize the project vicinity for nesting, foraging, or during migration.

Table 3: Breeding Bird Summary for T24N R05E

Common Name	Scientific Name
Pied-billed Grebe	*Podilymbus podiceps*
Great Blue Heron	*Ardea herodias*
Green Heron	*Butorides virescens*
Canada Goose	*Branta canadensis*
Wood Duck	*Aix sponsa*
Green-winged Teal	*Anas crecca*
Mallard	*Anas platyrhynchos*
Gadwall	*Anas strepera*
Common Merganser	*Mergus merganser*
Osprey	*Pandion haliaetus*
Bald Eagle	*Haliaeetus leucocephalus*
Cooper's Hawk	*Accipiter cooperii*
Red-tailed Hawk	*Buteo jamaicensis*
California Quail	*Callipepla californica*
Virginia Rail	*Rallus limicola*
American Coot	*Fulica americana*
Killdeer	*Charadrius vociferus*
Spotted Sandpiper	*Actitis macularia*
Glaucous-winged Gull	*Larus glaucescens*
Rock Dove	*Columba livia*
Band-tailed Pigeon	*Columba fasciata*
Vaux's Swift	*Chaetura vauxi*
Rufous Hummingbird	*Selasphorus rufus*
Belted Kingfisher	*Ceryle alcyon*
Red-breasted Sapsucker	*Sphyrapicus ruber*
Downy Woodpecker	*Picoides pubescens*
Hairy Woodpecker	*Picoides villosus*
Northern Flicker	*Colaptes auratus*
Pileated Woodpecker	*Dryocopus pileatus*
Olive-sided Flycatcher	*Contopus borealis*
Western Wood-Pewee	*Contopus sordidulus*
Willow Flycatcher	*Empidonax traillii*
Pacific-slope Flycatcher	*Empidonax difficilis*
Tree Swallow	*Tachycineta bicolor*
Violet-green Swallow	*Tachycineta thalassina*
Cliff Swallow	*Hirundo pyrrhonota*
Barn Swallow	*Hirundo rustica*
Steller's Jay	*Cyanocitta stelleri*
American Crow	*Corvus brachyrhynchos*
Black-capped Chickadee	*Parus atricapillus*
Chestnut-backed Chickadee	*Parus rufescens*
Bushtit	*Psaltriparus minimus*
Red-breasted Nuthatch	*Sitta canadensis*
Brown Creeper	*Certhia americana*
Bewick's Wren	*Thryomanes bewickii*
Winter Wren	*Troglodytes troglodytes*
Marsh Wren	*Cistothorus palustris*
Golden-crowned Kinglet	*Regulus satrapa*
Swainson's Thrush	*Catharus ustulatus*
American Robin	*Turdus migratorius*

Common Name	Scientific Name
Cedar Waxwing	*Bombycilla cedrorum*
European Starling	*Sturnus vulgaris*
Hutton's Vireo	*Vireo huttoni*
Warbling Vireo	*Vireo gilvus*
Orange-crowned Warbler	*Vermivora celata*
Yellow Warbler	*Dendroica petechia*
Black-throated Gray Warbler	*Dendroica nigrescens*
Common Yellowthroat	*Geothlypis trichas*
Wilson's Warbler	*Wilsonia pusilla*
Western Tanager	*Piranga ludoviciana*
Black-headed Grosbeak	*Pheucticus melanocephalus*
Spotted Towhee	*Pipilo maculatus*
Savannah Sparrow	*Passerculus sandwichensis*
Song Sparrow	*Melospiza melodia*
White-crowned Sparrow	*Zonotrichia leucophrys*
Dark-eyed Junco	*Junco hyemalis*
Red-winged Blackbird	*Agelaius phoeniceus*
Brewer's Blackbird	*Euphagus cyanocephalus*
Brown-headed Cowbird	*Molothrus ater*
Bullock's Oriole	*Icterus bullockii*
Purple Finch	*Carpodacus purpureus*
House Finch	*Carpodacus mexicanus*
Red Crossbill	*Loxia curvirostra*
Pine Siskin	*Carduelis pinus*
American Goldfinch	*Carduelis tristis*
House Sparrow	*Passer domesticus*

3.1.9 Federally Listed Species

The USFWS species list for King County (revised November 1, 2007) includes seven species listed as threatened or endangered, designated critical habitat for three species, two candidate species, and 22 species of concern (**Appendix B**). Based on a review of existing habitat conditions and the WDFW–PHS data, federally listed species under the jurisdiction of the USFWS do not exist within the immediate project area. East Creek does not provide suitable habitat for bull trout, nor has it been designated as critical habitat. Lake Washington is considered bull trout critical habitat, but is approximately 4 miles downstream of the project area.

The NMFS has jurisdiction over federally listed anadromous salmonids, marine mammals and turtles, designated Chinook salmon critical habitat, and essential fish habitat (EFH) (**Appendix C**). Chinook salmon and steelhead trout, which are both listed as threatened species, have not been documented in East Creek. East Creek has not been designated as Chinook salmon critical habitat. Lake Washington is considered Chinook salmon critical habitat, but is approximately 4 miles downstream of the project area. Furthermore, East Creek in the project area would not be considered as EFH.

3.1.10 Floodplains

The project site includes the mainstem of East Creek and is not mapped as being within the special flood hazard area that is inundated by the 100-year flood.

3.2 FIELD INVESTIGATION

DEA performed multiple site visits during February and June 2008 to verify preliminary data findings, flag the OHWM of East Creek and delineate wetland boundaries, document existing habitat conditions, and document wildlife use. Site photos are contained within **Appendix D**.

3.2.1 Wetlands

No wetlands were identified as occurring within the immediate project vicinity during the site investigations. However, there is a palustrine scrub-shrub wetland downstream of the project (**Appendix E**).

3.2.2 Streams

East Creek is a Type F water that requires a 100-foot buffer at an undeveloped site. It is not considered a Shoreline of the State.

On June 12, 2008, we quantified several habitat features of East Creek. Since the stream on the project site is currently in a pipe, we examined 200 feet of habitat downstream of the project site. Downstream of the existing pipe outlet the wetted width ranged from 4 to 8 feet and bankfull width ranged from 10 to 16 feet. The maximum water depth of the surveyed reach was 12 inches. Distinct habitat types included a pool, riffles, and glides. The one pool in the surveyed reach is a result of a silt fence in the stream channel that is acting as a dam and accumulating debris. The vertical drop of the pool is 12 inches. Immediately downstream of the pool the stream channel splits in two and the gradient of the creek decreases as it enters a palustrine scrub-shrub wetland.

Downstream of the project area the east bank of the creek lacks vegetation other than a few shrubs and grasses. The west bank vegetation is dominated by red alder (*Alnus rubra*) and Himalayan blackberry (*Rubus Armeniacus*). Riparian buffers are narrow as the creek is bordered by A&M Auto and Bellevue Auto Detail on the north and HD Fowler on the south.

Visual observations revealed substrates were dominated by sand and gravel. The surveyed reach is relatively linear, contained no large woody debris (LWD), and had no signs of erosion.

No fish were observed during the site visits. All known fish presence data is summarized below in **Table 4**.

Table 4: East Creek Fish Use Summary

Common Name	Comment
Coho Salmon	Species of Local Importance per city code (20.25H.150).
Cutthroat Trout	Widely dispersed through East Creek.
Lamprey	Probably western brook lamprey (*Lampetra richardsoni*).

Other native species that could potentially utilize East Creek include three-spine stickleback (*Gasterosteus aculeatus*), peamouth (*Mylocheilus caurinus*), and speckled dace (*Rhinichthys osculus*). Lampreys have been documented in East Creek, but which species of lamprey was not documented. Western brook lampreys are most common locally, but river lampreys (*Lampetra. ayresi*) have also been documented in Lake Washington. Lastly, species information on sculpins in East Creek is not known. Several different species of sculpin have been documented in the Lake Washington Basin.

3.2.3 Uplands

Vegetated uplands in the project vicinity consist of a narrow strip between the A&M Auto, Bellevue Auto Detail, and HD Fowler buildings/paved areas footprint. On the north side (i.e. A&M Auto side) of the stream there are mostly grasses. On the south side there are a few red alder (*Alnus rubra*) in the tree layer and mostly Himalayan blackberry (*Rubus armeniacus*) understory.

3.2.4 Wildlife

The project is located between a forested riparian corridor and urban natural open space as defined by the WDFW. Although these areas are bisected by numerous roads and have been encroached upon by various developments, they are relatively large for an urban environment and may provide suitable habitat for a wide array of wildlife. Habitat types within the project area that provide forage, cover, and breeding opportunities include deciduous forested uplands, East Creek, and palustrine shrub-scrub wetlands. These factors likely result in a moderately diverse assemblage of wildlife in the project area.

Wildlife observations were limited during the three site visits to the immediate project area. Only the American robin and American crow were observed. It is important to note that species use of the site is not limited to those observed during the site visits and is not all-inclusive. Numerous species will only use the project area seasonally or during migration; others may be very rare, cryptic, or nocturnal. Surveys were not conducted to target specific species.

4.0 HABITAT IMPACTS

The East Creek Rehabilitation Project will not result in any direct impact to wetlands. However, stream channel and stream buffer impacts will occur as a result of the removal of the existing culvert and stream rehabilitation. The overall project length is approximately 219 feet. The total project footprint is 3,110 square feet, which includes 1,908 square feet of stream impact below the OHWM and 1,202 square feet of stream buffer impact. Furthermore, impacts will occur to fish, wildlife, and their habitats in the project area. These impacts are described below.

4.1 SALMONID HABITAT EFFECTS MATRIX

The following Salmonid Habitat Effects Matrix (**Table 5**) describes potential impacts to salmonid habitat resulting from construction of East Creek Rehabilitation Project. It considers all life stages and all salmonids (resident and anadromous), not just federally listed salmonids as would be the case in ESA documentation. The project effects to baseline conditions factor in best management practices (BMPs) and mitigation activities that would be implemented as part of the overall project. It is assumed that BMPs and mitigation actions will be successful, and monitored as appropriate. The effects to baseline conditions can be maintain, degrade, or improve. These effects can also change over time and vary, depending on if considering either the local or watershed scale.

Table 5: Salmonid Habitat Project Effects Matrix

PATHWAY	INDICATORS	PROJECT EFFECTS TO BASELINE CONDITIONS
		East Creek
Water Quality	Temperature	Improve. Over the long-term, the project will improve the temperature indicator if the riparian buffer enhancements succeed.
	Sediment	Maintain. This conclusion is based on implementation of BMPs, turbidity monitoring plan, and monitoring during construction activities.
	Chemical Contamination and Nutrients	Maintain. No change in chemical contamination and nutrients is anticipated to result from this project.
Habitat Access	Physical Barriers	Improve. The removal of the existing culvert, silt fence, and debris jam will improve the possibility of fish migration upstream.
Habitat Elements	Substrate	Degrade ↔ Maintain. The project may degrade the substrate indicator during construction at the local scale.
	LWD	Maintain. No in-stream LWD will be removed during construction as none is currently present in the project reach.
	Pool Frequency	Improve. Pool Frequency is anticipated to increase as a result of this project via roots of riparian buffer plantings. Tree roots from the riparian buffer contribute to pool formation in other reaches of East Creek (Bellevue 2003).
	Pool Quality	Maintain. No change in Pool Quality is anticipated to result from this project.
	Off-Channel Habitat	Maintain. No change in the off-channel habitat indicator is anticipated to result from implementation of this project.
	Refugia	Maintain. Returning the stream channel to a daylighted condition will maintain the refugia indicator.

PATHWAY	INDICATORS	PROJECT EFFECTS TO BASELINE CONDITIONS
		East Creek
Channel Conditions and Dynamics	Width/Depth Ratio	Maintain. No change in Width/Depth Ratio indicator is anticipated to result from implementation of this project.
	Streambank Condition	Degrade → Maintain. The stream bank in the project reach will be degraded during construction and this impact will continue until plants installed along the banks of the pond become established. Once established, this indictor will generally be maintained.
	Floodplain Connectivity	Maintain. No change in the floodplain connectivity indicator is anticipated to result from implementation of this project.
Flow/Hydrology	Change in Peak/Base Flows	Maintain. No change in peak/base flow is anticipated.
	Increase in Drainage Network	Maintain. The implementation of this project will return the drainage network to its original condition.
Watershed Conditions	Road Density and Location	Maintain. No new roads are required as the project.
	Disturbance History	Degrade. Construction will result in an increase in the amount of disturbance to East Creek at the local scale.
	Riparian Reserve	Maintain. The riparian reserve indicator in the project reach will be maintained as no trees will be cut as a result of this project.
Bull Trout Subpopulation Characteristics within Subpopulation Watersheds	Subpopulation Size	Maintain. No change in the subpopulation size indicator is anticipated.
	Growth and Survival	Maintain. No change in the growth and survival indicator is anticipated.
	Life History Diversity and Isolation	Maintain. No change in the life history diversity and isolation indicator is anticipated.
	Persistence and Genetic Integrity	Maintain. No change in the persistence and genetic integrity indicator is anticipated.
	Species Integration/Habitat Conditions	Maintain. No change in the species integration/habitat conditions indicator is anticipated.

4.2 IMPACTS TO SPECIES OF LOCAL IMPORTANCE

Impacts to species of local importance addressed in this section are limited to those documented in the project area.

4.2.1 Coho Salmon

The WDFW does not document East Creek as an anadromous fish stream. Spawner surveys by the salmon watcher program do not document the presence of any salmon in East Creek (King County 2007). However, coho salmon may inhabit the lower reaches of East Creek (Bellevue 2003). These would most likely be juveniles using the lower reaches as rearing habitat.

Impacts could only occur during construction. The main impact would be increases in turbidity from construction activities. The implementation of BMPs, buffer mitigation, substrate enhancement, and additional plans (e.g., turbidity monitoring plan) will further reduce potential impacts to this species.

4.2.2 Great Blue Heron

No great blue heron were observed in the project reach and no rookeries are known to exist within one mile of the project area (WDFW 2008). No nests were observed in the project area during multiple site visits. Based on the available data, use of the project area is limited to foraging activities. Therefore, impacts to great blue heron would be limited to exclusion from the immediate project area during construction and maintenance activities.

4.2.3 Red Tailed Hawk

No red-tailed hawks were observed flying over the project area and no nests were observed in the project area during multiple site visits. Based on the available data, use of the project area is limited to migration between more suitable foraging and nesting habitats. However, perching and foraging could occur in the project area. Since no nests have been documented in the project area and use by foraging adults appears to be limited, impacts to red tailed hawk would be limited to exclusion from the immediate project area during construction and maintenance activities.

4.3 WILDLIFE IMPACTS

The project area is used by numerous species of wildlife. These include amphibians, mammals, and birds. The project is suitable habitat for many species and may be used for foraging, nesting, rearing, roosting, and as a wildlife corridor (i.e. areas of habitat that link similar habitat patches in a landscape). Primary impacts to these species are associated with stream rehabilitation construction.

Wildlife corridors facilitate the movement of species among isolated habitat patches. Corridors can be narrow riparian areas or large forested areas. Wildlife use of different corridor types varies depending on individual species requirements. Impacts to the existing wildlife corridor in the project area will be minimal and limited to temporary disturbance during construction activities.

4.4 WATER QUALITY IMPACTS

Potential impacts to water quality could occur during either construction or maintenance activities. Rehabilitation of the stream channel would result in 1,908 square feet of impact to the stream channel and 1,202 square feet of uplands, which includes only temporary impacts. During construction, stream flow will be diverted around the stream channel, construction equipment will operate within riparian habitat, excavated soils will be temporarily stockpiled, dump trucks will be used to move both equipment to the project site and remove stockpiled soil, and equipment and supplies will be stored in the project area. These actions have the potential to impact water quality.

An important consideration when analyzing potential impacts to water quality from a specific project is what measures will be taken to reduce impacts. BMPs such as dust control measures, control of exposed soils, and control of pollutants will occur per City of Bellevue code. Additional sediment control measures will be required per the clearing and grading permit, including the implementation of a turbidity monitoring plan (included in Section 5.2.1). The full implementation of all the required sediment control measures should reduce the likelihood of

construction-related sediment adversely impacting remaining sensitive areas in the project vicinity.

4.4.1 Conservation and Performance Measures

General

- A Temporary Erosion and Sediment Control Plan will be developed and implemented.
- A qualified Erosion and Control Inspector will review all sediment control measures twice per week during construction.
- Turbidity will be monitored per the Turbidity Monitoring Plan outlined in Section 5.2.1.
- A Spill Prevention Control and Countermeasures plan that meets the standards will be developed and implemented for the project to ensure that all pollutants and products will be controlled and contained.
- Seasonal restrictions applied to work conducted below the OHWM will be as required by a HPA issued by the WDFW.
- Construction impacts will be confined to the minimum area necessary to complete the project.
- Removal of riparian vegetation will be minimized as much as possible.
- Implementation of the Mitigation Plan outlined in Section 5.0 will occur.

Water Quality/Erosion Control

- All BMPs will be installed according to City of Bellevue standards and will be inspected and maintained throughout the life of the project.
- Staging and soil stockpile areas will be limited to those outlined in the clearing and grading permit. Staging areas will be fenced.
- Spill kits will be kept on-site.
- Fuels and other potentially hazardous materials will be kept in a secured area. Secured means fenced, and locked during non-work hours.
- Secondary containment will be required for all hazardous materials. Spill containment is required for generators, parked equipment, porta-potty, fuels, solvents, etc.
- The project will comply with water quality conditions identified by the Washington State Department of Ecology.
- Wash water resulting from wash down of equipment or work areas will be contained for proper treatment and/or disposal, and will not be directly discharged into state waters.
- There will be no discharge of oil, fuels, or chemicals to surface waters, or onto land where there is a potential for reentry into surface waters.

- No cleaning solvents or chemicals used for tools or equipment cleaning will be discharged to ground or surface waters.
- The contractor will regularly check fuel hoses, oil drums, oil or fuel transfer valves, fittings, etc. for leaks, and will maintain and store materials properly to prevent spills.
- BMPs will be used on all project activities to control and prevent sediments from entering aquatic systems.

In-water and Over-water Work

- All fish will be removed from the work area prior to any in-water work activities per the Fish Salvage Plan in Section 5.2.2.
- Materials removed from below the OHWM, will be placed in an upland location where they cannot enter water bodies.
- Materials, such as stream bed gravels, placed within the water, will be free of sediment and/or other contaminants.
- Water pumped from work isolation areas will be treated to remove suspended sediments prior to returning to the water body. Discharge will occur in such a manner as not to cause erosion.
- Mechanical equipment will not enter the stream channel until the project reach has been dewatered and fish salvage has been completed.
- Mechanical equipment operating in the project area will be inspected daily for leaks. Any equipment found to be leaking will immediately be fixed or removed from the project site.

5.0 MITIGATION

The project area includes East Creek and its uplands. Uplands within the project area are within the designated buffer of East Creek. No direct wetland impacts would result from implementation of this project, therefore, no mitigation is proposed for direct wetland impacts. Impacts to the stream and buffers are temporary. Temporary impacts include areas accessed or utilized during construction, such as, perimeter of the creek disturbed during construction.

The project will result in 1,202 square feet of temporary buffer impact. Furthermore, the project would result in 1,908 square feet of stream impact. Per City of Bellevue code, critical area buffers disturbed or impacted shall be replaced at a minimum ratio of one to one. The Mitigation Plan proposes to enhance 1,202 square feet of existing buffer. Mitigation for stream and buffer impacts includes two primary actions.

1. Daylighting and regrading of 219 feet of East Creek
2. Revegetating riparian buffers

5.1 MITIGATION PLAN

The following mitigation plan has been designed to mitigate for project impacts. It includes goals and objectives, a planting plan, plant establishment and maintenance, and monitoring. **Appendix A** includes the mitigation design sheets.

5.1.1 Goals and Objectives

The primary goals of this mitigation plan are to replace riparian and stream functions impacted by rehabilitation of East Creek while preventing flooding of the A&M Auto building. The proposed mitigation plan intends to rehabilitate East Creek by removing the existing culvert and regrading the stream channel to a positive slope. Stream bed gravels will also be enhanced. The proposed mitigation plan intends to mitigate for riparian impacts by revegetating the north and south buffer of the creek with native vegetation. Specific objectives include returning the stream to its daylighted condition, increasing shading of the creek by revegetating the buffer, increasing wildlife function of the riparian zone by increasing plant diversity, and reducing flooding by creating a positive stream channel slope.

5.1.2 Stream Rehabilitation

East Creek will be daylighted and regraded to a positive slope. Stream bed gravels will be enhanced with appropriate sized river rock.

Stream Channel Establishment and Maintenance

Stream channel establishment throughout the monitoring period is essential to stream community development and the success of the overall mitigation plan. The stream establishment period for this project is five years. During this time, A&M Auto will monitor the site for stream health.

Monitoring will occur on a yearly basis. Performance Standards are set for Years 1, 3, and 5 as summarized below.

Performance Standards

Years 1, 3, and 5

- Fish will use rehabilitated section of creek (visual observations during annual vegetation monitoring).
- Stream channel will remain fish passable (visual observations during annual vegetation monitoring).
- Stream channel will develop diverse habitat types (i.e. pools, riffles, and glides).

Contingencies

Failure to meet the proposed stream performance standards will result in some or all of the following contingency actions:

- Instream features in the form of wood or boulders may need to be added to diversify stream habitat types.

Monitoring Plan

Formal monitoring will occur during Years 1, 2, 3, 4, and 5. A monitoring report will be submitted to the City of Bellevue and other resource agencies for review and comment. These reports will address progress toward meeting the performance measures and success standards as specified, and any recommended contingency actions taken to correct deficiencies that occurred in meeting these standards. Report submittals will occur following each monitoring period. Successful mitigation will be measured by attainment of the performance measures and success standards described in this mitigation plan document.

A qualified biologist will conduct the monitoring at the mitigation site. Compliance monitoring provides a means for tracking the development of the mitigation site over time, and for determining compliance with permits issued by federal, state, local, or tribal jurisdictions.

Mitigation site monitoring will utilize a variety of ecological monitoring techniques. Monitoring will include visual observations, photo points, as well as additional methods deemed necessary to adequately document development of the stream channel over the monitoring period. Monitoring methodology will be included in annual monitoring reports. Monitoring reports will include the results of the additional actions outlined below.

5.1.3 Buffer Planting Plan

A plant list, materials, specifications, and details are provided in **Appendix A**. Plants will be installed per the planting plan.

Plant Establishment and Maintenance

Plant establishment throughout the monitoring period is essential to plant community development and the success of the overall mitigation plan. The plant establishment period for this project is five years. During this time, A&M Auto will monitor the site for plant survival, health and growth, herbivory, weeds, and vandalism. Monitoring will occur on a yearly basis. Performance Standards are set for Years 1, 3, and 5 as summarized below.

Performance Standards

Year 1

- All planting zones will achieve 100 percent survival of planted species at the end of the first-year plant establishment period. If all species planted that die are replaced, the performance measure will be met.

Year 3

- All planting zones will achieve 75 percent survival of planted species at the end of the third year.

Year 5

- All planting zones will achieve 70 percent survival of planted species at the end of the fifth year.
- Percent cover of non-native invasive species will be less than 15 percent. No Japanese knotweed present.

Contingencies

Failure to meet the proposed vegetation standard of success will result in some or all of the following contingency actions:

- Additional vegetation planting may be required to meet plant survival standards. Plant species will be evaluated in relation to site conditions to determine if species substitutions will be required.
- Control of competitive weed species may be required if plant survival standards are not met. Methods of weed control could include hand or mechanical weeding, or mulching.

Monitoring Plan

All planting zones will be monitored annually for a minimum of three years, which includes the first year warranty inspection. Formal monitoring will occur during Years 1, 2, 3, 4, and 5. A monitoring report will be submitted to the City of Bellevue and other resource agencies for review and comment. These reports will address progress toward meeting the performance measures and success standards as specified, and any recommended contingency actions taken to correct deficiencies that occurred in meeting these standards. Report submittals will occur

following each monitoring period. Successful mitigation will be measured by attainment of the performance measures and success standards described in this mitigation plan document.

A qualified biologist will conduct the monitoring at the mitigation site. Compliance monitoring provides a means for tracking the development of the mitigation site over time, and for determining compliance with permits issued by federal, state, local, or tribal jurisdictions.

Mitigation site monitoring will utilize a variety of ecological monitoring techniques. Monitoring will include tracking mortality, photo points, as well as additional methods deemed necessary to adequately document development of the buffer over the monitoring period. Monitoring methodology will be included in annual monitoring reports. Monitoring reports will include the results of the additional actions outlined below.

5.2 ADDITIONAL ACTIONS

Additional actions are required due to site and project-specific factors. This includes monitoring during construction and maintenance. Monitoring includes two primary actions: monitoring of turbidity and fish salvage. These actions are required as part of the permit approval process. The results of these additional actions will be documented in the yearly monitoring reports.

5.2.1 Turbidity Monitoring Plan

The following Turbidity Monitoring Plan has been developed at the request of the City of Bellevue for issuance of a Clearing and Grading Permit. The purpose of this plan is to provide the framework for performance monitoring to assure compliance with State Surface Water Quality Standards (WAC 173.201 A).

Monitoring Standards. Since the background turbidity will likely be 50 Nephelometric turbidity units (NTUs) or less and stream flow will be 10 cubic feet per second (cfs) or less during construction and maintenance, the project site must not increase turbidity downstream of the project site by 5 NTU over background levels past the appropriate mixing zone, which in this case is 100 feet. However, should a major storm event occur during construction or any other non-project related activity that results in a background turbidity measurement in excess of 50 NTUs, the benchmark not to be exceeded will be 10 percent above background turbidity as measured upstream of the project site.

Monitoring Sites. Since the appropriate mixing zone in this case is 100 feet, the downstream limits of compliance is downstream of the end of the regarded creek. Background turbidity will be determined at the beginning of each monitoring event upstream of the project site.

Monitoring Frequency. Since construction will occur during the dry season and within the designated WDFW in-water work window, sampling will occur at least once a week. However, monitoring will also occur during/after any significant rainfall events should one occur during construction. A significant rainfall event shall be defined as a storm event greater than 0.5 inch of rainfall within 24 hours, or as requested by the City of Bellevue. The station of record for rainfall measurements will be the National Oceanic and Atmospheric Administration (NOAA) weather report for Bellevue, Washington. Additional sampling will be required if the turbidity

results are high or turbid water is observed. Any violation of the aforementioned standards will trigger daily monitoring until standards are achieved. During each monitoring event, a minimum of three measurements will be taken to determine background turbidity at the upstream site and compliance at the downstream site.

Monitoring Reporting. The results of turbidity monitoring will be recorded on a City of Bellevue Turbidity Monitoring Data Sheet (**Appendix G**). The City of Bellevue Clearing and Grading Inspector should be immediately contacted by telephone if the standard is exceeded. Hardcopies of this form should also be faxed on each day of monitoring to the Clearing and Grading Inspector (425.452.7930). If turbidity standards are not met, the construction contractor must also be notified immediately (follow-up with a written notification) and all work will stop until corrective measures have resulted in satisfactory NTU measurements at the downstream monitoring site. All corrective actions and outcome of additional sampling must be recorded on the data sheet. Once the project has been completed, the turbidity monitor will provide a letter report to the Clearing and Grading Inspector outlining the results of the monitoring, which will include copies of the turbidity monitoring data sheets.

A monitor will document that BMPs have been implemented as required by the clearing and grading permit, and other requirements outlined in all applicable permits. The monitor will also have the authority to require the installation of additional BMPs should they be deemed necessary. A monitor not affiliated with the construction contractor will conduct a site visit at least twice per week during the construction period.

5.2.2 Fish Salvage Plan

Fish salvage is required during construction. The individuals conducting fish salvage must contact the WDFW local area habitat biologist at least one week prior to conducting fish salvage, have a valid WDFW Scientific Collection Permit, a crew leader will have at least 100 hours of experience electrofishing and will have attended the Backpack Electrofishing and Fish Handling Techniques training offered by the Northwest Environmental Training Center. The following is the proper sequence for fish exclusion:

1. Isolate the project area (install block nets).
2. Install minnow traps and check frequently.
3. Dip or seine net exclusion.
4. Electrofish project reach.
5. Salvage during dewatering.
6. Inspect dewatered reach for any remaining fish or other aquatic resources.
7. Identify and release fish.
8. Remove block nets.

Isolate the Project Reach. Block nets will be installed at the upstream and downstream project limits to isolate the entire affected stream reach and prevent fish and other aquatic wildlife from moving into the work area. Block net mesh size, length, type of material, and depth will vary based on site conditions. Generally, block net mesh size is the same as seine material (9.5 mm stretched). Block nets will be installed securely along both banks and in channel to prevent failure during unforeseen rain events or debris accumulation. Some locations may require additional block net support such as galvanized hardware cloth, additional stakes, or metal fence posts. Block nets will be left in place throughout the construction period or the maintenance activity, and may require daily leaf and debris removal to ensure proper function.

A biologist will be designated to monitor and maintain the nets. The flow rate in the stream and the amount of leaves and other debris collected on the net will determine how often the nets need to be checked. Once the stream reach has been isolated, all attempts to remove fish and other aquatic life will be made with the least amount of handling.

Install and Check Minnow Traps. The use of minnow traps is the first level of fish removal as it is the least detrimental, but will not capture all fish within the project reach. Minnow traps will be deployed in pools, and baited with canned salmon. Each minnow trap will be inspected daily. Each minnow trap will be tagged with waterproof labels that list the project proponent, project biologist, contact information including phone number, and valid scientific collection permit number. Minnow traps will be deployed for a minimum of three consecutive days.

Dip or Seine Net Exclusion. Aquatic life remaining after minnow traps are removed will be captured by hand or with dip nets and immediately put in dark-colored 5-gallon buckets filled with clean stream water. Net drags or seining through the isolated stream reach may also be used. Depending on the site, various lengths of 9.5 mm stretched nylon mesh minnow seines are used throughout the isolated stream reach. The seine is approximately 3 feet wide and of varying lengths with approximately 15 feet of rope attached to either end. Sets are conducted with one person on shore and one to two people working the other end of the net through the isolated stream reach area. Once the net is out and the lead line dropped to the bottom, the other end of the 15-foot line is brought to shore and both ends of the net are pulled in quickly in tandem.

Electrofishing. Electrofishing of the project reach will commence one day prior to dewatering, after minnow traps and dip net/seine capture techniques have been completed. Electrofishing will occur while moving upstream and will continue until no more fish are captured during three consecutive passes. The electrofisher will be set to use direct current at the lowest voltage and pulse rate needed to effectively capture fish based on water temperature and conductivity. No electrofishing will occur when visibility is less than one foot or water temperature is below 4 degrees Celsius or above 18 degrees Celsius. Conductivity and stream temperature will be measured and recorded prior to electrofishing. Conductivity measurements will be used to set initial electrofisher settings, while stream temperature will be measured hourly. The crew leader will have at least 100 hours of experience electrofishing and will have attended the Backpack Electrofishing and Fish Handling Techniques training offered by the Northwest Environmental Training Center.

Salvage during Dewatering. The affected reach shall be dewatered slowly while using dip nets to remove any remaining aquatic vertebrates from pools where they may congregate during dewatering. The team of biologists will scour the project reach during dewatering and salvage all remaining aquatic vertebrates. Salvage during dewatering is the final action designed to ensure most, if not all, aquatic vertebrates are safely removed from the dewatered stream reach prior to construction of the sediment pond.

Fish Release. Regardless of capture technique, fish should be handled properly. A healthy environment for the stressed fish must be provided and all fish should be released as soon as possible. There should not be overcrowding in the buckets and holding time should be minimized. Large fish will be kept separated from smaller prey-sized fish to avoid predation during containment. Water to water transfers, the use of shaded or dark containers, and supplemental oxygen shall be used during fish handling operations. Aquatic vertebrates shall be released to a location upstream of the project reach and block net. They will be released into an area that provides the best available habitat. Several buckets will be available with clean stream water to hold the fish until counting and release can be completed. These buckets will be equipped with air pumps to maintain proper dissolved oxygen levels. Frequent monitoring of bucket temperature and well being of the specimens should be done to assure that all specimens will be released unharmed. Perforated buckets may also be used and placed upstream of the block nets until the fish are counted.

Remove Block Nets. Block nets will be removed, following completion of the activity, as soon as the work area is stabilized. Block nets will not be left in place for an extended amount of time. Block nets will be removed with care and checked for aquatic vertebrates.

Documentation. The results of the fish capture effort(s) will be presented to the City of Bellevue and WDFW via annual reporting requirements associated with the Scientific Collection Permit.

6.0 REFERENCES

City of Bellevue. 2003. Bellevue Critical Areas Update Stream Inventory.

———. 1987 Sensitive Areas Notebook. April.

Dvornich, K.M., K.R. McAllister, and K.B. Aubry. 1997. *Amphibians and Reptiles of Washington State, Location Data and Predicted Distributions.* Washington State Gap Analysis Project Final Report – Volume 2.

Johnson, R.E., and K.M. Cassidy. 1997. *Terrestrial Mammals of Washington State: Location Data and Predicted Distributions.* Volume 3 in Washington State Gap Analysis – Final Report, (K.M. Cassidy, C.E. Grue, M.R. Smith and K.M. Dvornich, eds.), Washington Cooperative Fish and Wildlife Research Unit, University of Washington, Seattle, 304 pp.

Kerwin, J. 2001. *Salmon and Steelhead Habitat Limiting Factors Report for the Cedar – Sammamish Basin (Watershed Water Resource Inventory Area 8).* Washington State Conservation Commission. Olympia, Washington.

King County. 2008. 2007 Salmon Watcher Program, Lake Washington Watershed, Puget Sound WRIA 8 Streams, and Vashon Island. May 2008.

———. 1990. King County Sensitive Areas Map Folio. King County, Washington.

Smith, M.R., P.W. Mattocks, Jr., and K.M. Cassidy. 1997. Breeding Birds of Washington State. Volume 4 in Washington State Gap Analysis – Final Report, (K.M. Cassidy, C.E. Grue, M.R. Smith, and K.M. Dvornich, eds.), Seattle Audubon Society Publications in Zoology No. 1, Seattle, 538 pp.

U.S. Department of Agriculture (USDA). 1991. *Hydric Soils of the State of Washington*. Natural Resources Conservation Service (formerly Soil Conservation Service).

———. 1973. *Soil Survey of King County Area, Washington.* Soil Conservation Service, Washington Agricultural Experiment Station.

U.S. Department of the Interior (DOI). 1988. Mercer Island Quadrangle – National Wetlands Inventory Map. U.S. Department of the Interior, Fish and Wildlife Service, National Wetland Inventory (NWI).

Washington State Department of Fish and Wildlife (WDFW). 2008. Priority Habitat and Species Data - Habitats and Species Report in the Vicinity of T24R05E Section 10. February 2, 2008.

Washington Department of Natural Resources (WDNR). 2008. Washington Natural Heritage Program Rare Plant and High Quality Native Ecosystem Data Search. March 14, 2008.

Williams, R.W., R.M. Laramie, and J.J. Ames. 1975. *A Catalog of Washington Streams and Salmon Utilization – Volume I, Puget Sound Region.* Washington Department of Fisheries.

Wydoski, R.S., and R.R. Whitney. 1979. *Inland Fishes of Washington*. University of Washington Press. Seattle, Washington.

This page intentionally left blank.

APPENDIX A

STREAM REHABILITATION DESIGN SHEETS

This page intentionally left blank.

NW 1/4 SEC. 10, TWP 24 N., RNG. 05 E., W.M.

EAST CREEK REHABILITATION PROJECT

CALL BEFORE YOU DIG
Call: TOLL FREE
1-800-424-5555

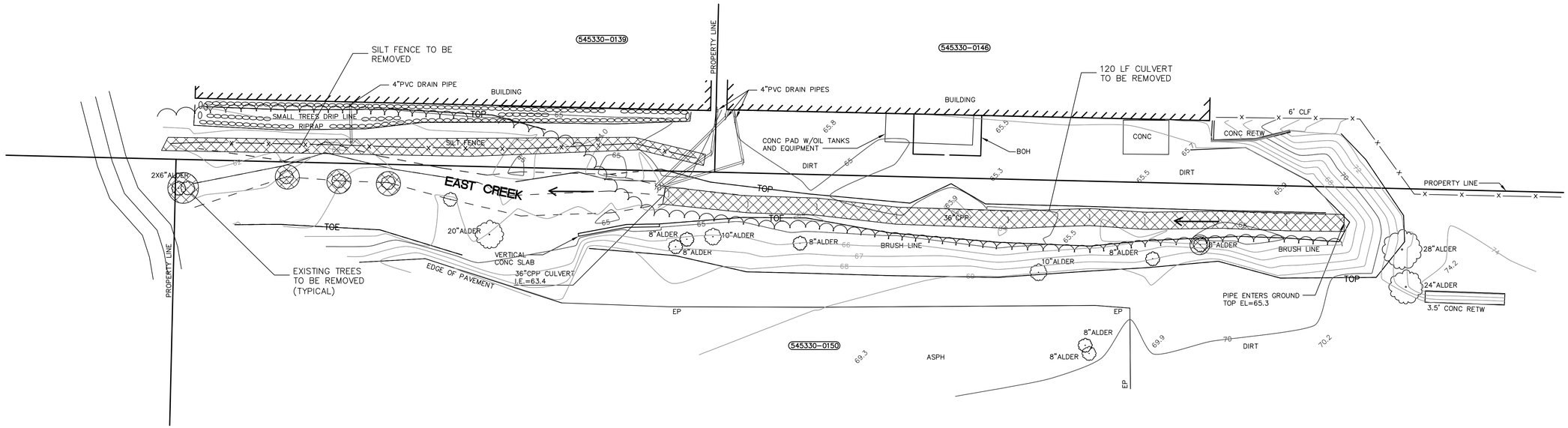

LEGEND:

STREAM FLOW ARROW

TO BE REMOVED

0 5 10 20

SHEET INDEX

SR-1 - EXISTING SITE CONDITIONS
SR-2 - GRADING PLAN
SR-3 - PROFILE AND CROSS SECTIONS
SR-4 - LANDSCAPE PLAN
SR-5 - STREAM MONITORING PLAN

PERMIT SUBMITTAL- NOT FOR CONSTRUCTION

STATE OF WASHINGTON REGISTERED LANDSCAPE ARCHITECT

JONATHAN C. GAGE
CERTIFICATE NO. 952

EXISTING CONDITIONS SITE PLAN
EAST CREEK REHABILITATION PROJECT
A + M COMPLETE AUTO AND TRUCK REPAIR, INC
BELLEVUE, WASHINGTON

DAVID EVANS AND ASSOCIATES INC.
415 - 118th Avenue SE
Bellevue Washington 98005-3518
Phone: 425.519.6500

REVISIONS: APPD.

DATE: AUGUST 18, 2008
DESIGN: GBK
DRAWN: GBK
CHECKED: JCGA
REVISION NUMBER:

SCALE: 1"=10'

PROJECT NUMBER:
AMIN00000001

DRAWING FILE:

SHEET NO.
SR-1
OF 5

gbk 08/20/08 10:01am - P:\a\AMIN00000001\0400CAD\LA\dwg\AMIN1_SR1.dwg

NW 1/4 SEC. 10, TWP 24 N., RNG. 05 E., W.M.

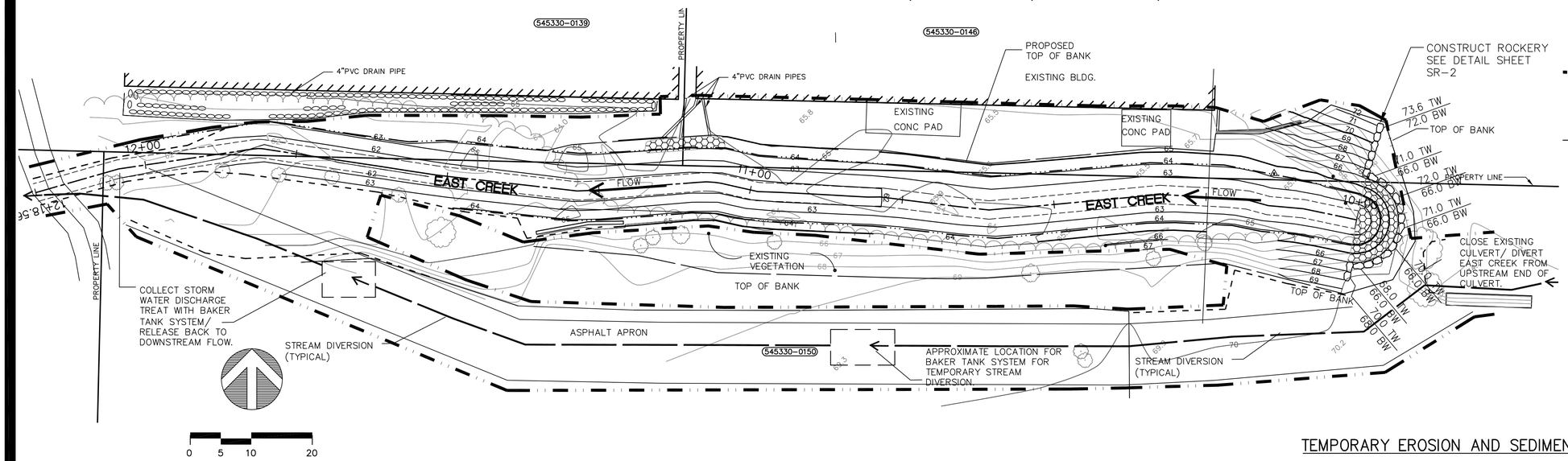

LEGEND:

- STREAM FLOW ARROW
- LIMIT OF WORK/ HIGH VISIBILITY FENCE
- STRAW WATTLES
- TOP OF SLOPE
- TOE OF SLOPE
- ORDINARY HIGH WATER MARK
- STREAM CENTER LINE
- 64 PROPOSED CONTOUR
- EXISTING CONTOUR
- 8" QUARRY SPALL ARMOUR

CALL BEFORE YOU DIG
Call: TOLL FREE
1-800-424-5555

LEGEND:

1. 2"-4" QUARRY SPALLS ROCK FILTER LAYER
2. GRAVEL BACKFILL FOR DRAINS, 12"MIN THICKNESS.
3. PERFORATED OR SLOTTED DRAIN PIPE, 4" MIN., BEDDED WITHIN 2" TO 4" QUARRY SPALLS AS DESCRIBED ABOVE. TIGHTLINE TO STORM DRAIN SYSTEM OR DAYLIGHT.
4. UNDISTURBED FIRM NATIVE SOILS OR COMPACTED STRUCTURAL FILL.
3. DESIGNATES SIZE OF ROCK REQUIRED PER GEOTECHNICAL ENGINEER'S RECOMMENDATIONS.

NOTES:

1. GRAVEL BACKFILL SHALL MEET WSDOT/APWA STANDARD SPECIFICATION 9-03.12(4)
2. FLATTER SLOPE MAY BE REQUIRED IN LESS STABLE SOIL.

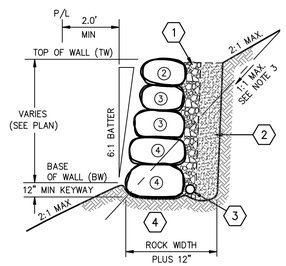

CUT SECTION

SIZE	APPROX. WT - LBS	APPROX. DIA.
1 MAN	50 - 200	12" - 18"
2 MAN	200 - 700	18" - 28"
3 MAN	700 - 2000	28" - 36"
4 MAN	2000 - 4000	36" - 48"
5 MAN	4000 - 6000	48" - 54"
6 MAN	6000 - 8000	54" - 60"

DETAIL - ROCKERY

SIEVE	MASS RETAINED	CUM MASS RETAINED	IND% RETAINED	% RETAINED	% PASSING
4" (100mm)	0.0	0.0	0.0	0.0	100
3" (75mm)	1.9	1.9	7.2	7.2	92
2" (50mm)	11.3	13.2	42.6	49.8	50
1 1/2" (37.5mm)	6.3	19.5	23.6	73.4	27
1" (25mm)	6.9	26.4	26.0	99.4	0-1
#200 (75um)	0.0	26.4	0.00	99.43	0-1

STREAM CHANNEL GRAVEL GRADATION CHART

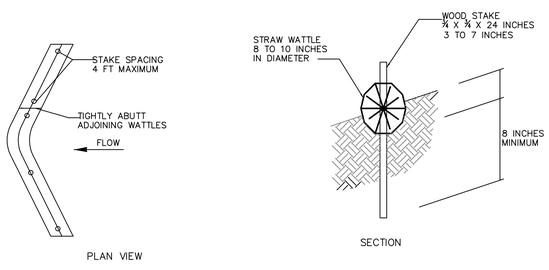

STRAW WATTLE INSERT

NOT TO SCALE

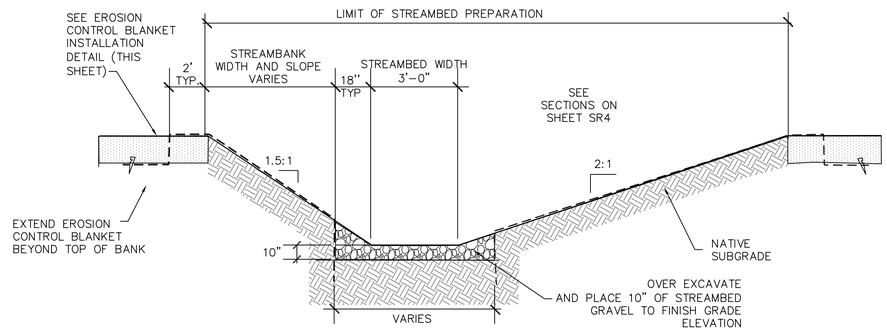

CROSS SECTION

TYPICAL STREAM CHANNEL CONSTRUCTION

NOT TO SCALE

TEMPORARY EROSION AND SEDIMENT CONTROL NOTES:

Prior to any grading in the stream rehabilitation area temporary erosion and sediment controls shall be installed as shown on the Grading Plan. Straw wattles are intended to allow for construction while keeping sediment out of existing sensitive areas. Straw wattles shall remain in place throughout all construction phases. Wattles shall not be removed without authorization by the Landscape Architect/ Wetland Biologist.

EARTHWORK NOTES:

Grading activities shall occur in conformance with the required fish window, approximately July 1, through August 31st. All work shall be scheduled by the contractor during low flow conditions. All work shall be done in the dry.

Contractor shall give the stream construction monitor a maximum of 5 working days notice prior to construction.

No construction work shall commence until there is a pre-construction meeting between the client, the stream construction monitor, and participating contractor to review the rehabilitation plan.

Construction must be performed in accordance with codes, permit conditions, and other applicable ordinances and policies.

Prior to any construction, a licensed surveyor shall survey, stake and flag limits of work/grading based on the boundaries shown on the grading plan. The stream construction monitor shall approve flagging of limit of work limits prior to construction. Contractor shall be responsible for verifying actual locations of existing vegetation to be saved. Contractor shall be responsible for restoring any disturbance to existing vegetation located outside the limits of work.

Contractor shall not stockpile excavated soils in any sensitive area. All excavated soils shall be exported off site. Stream rehabilitation grading subject to field verification by construction monitor to ensure design conformance.

Contractor shall provide a temporary stream diversion and dewatering with a Baker Tank system or approved equivalent. Contractor shall also provide treatment for storm water discharge with a Baker Tank system or approved equivalent. Contractor shall submit stream diversion/dewatering plan to Engineer for approval.

Erosion control blankets shall be placed along the stream channel in areas shown in the plans.

Stream bed gravels shall be clean, naturally occurring gravel material that meet gradient requirements as shown in stream bed gravel table. (See this sheet).

All exposed soils and erosion control blankets will be hydroseeded with seed mix as shown in the plant schedule (Sheet SR-4).

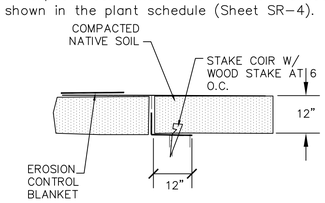

EROSION CONTROL BLANKET INSTALLATION

NOT TO SCALE

STATE OF WASHINGTON REGISTERED LANDSCAPE ARCHITECT

JONATHAN C. GAGE
CERTIFICATE NO. 952

PERMIT SUBMITTAL - NOT FOR CONSTRUCTION

GRADING PLAN
EAST CREEK REHABILITATION PROJECT
A + M COMPLETE AUTO AND TRUCK REPAIR, INC
BELLEVUE, WASHINGTON

DAVID EVANS AND ASSOCIATES INC.
415 - 118th Avenue SE
Bellevue Washington 98005-3518
Phone: 425.519.6500

REVISIONS: APPD.

DATE: AUGUST 18, 2008
DESIGN: GBK
DRAWN: GBK
CHECKED: JCGA
REVISION NUMBER:

SCALE: 1"=10'

PROJECT NUMBER: AMIN00000001

DRAWING FILE:

SHEET NO. SR-2 OF 5

gbk 08/20/08 10:03am - P:\a\AMIN00000001\0400CAD\LA\dwg\AMIN1_SR2.dwg

NW 1/4 SEC. 10, TWP 24 N., RNG. 05 E., W.M.

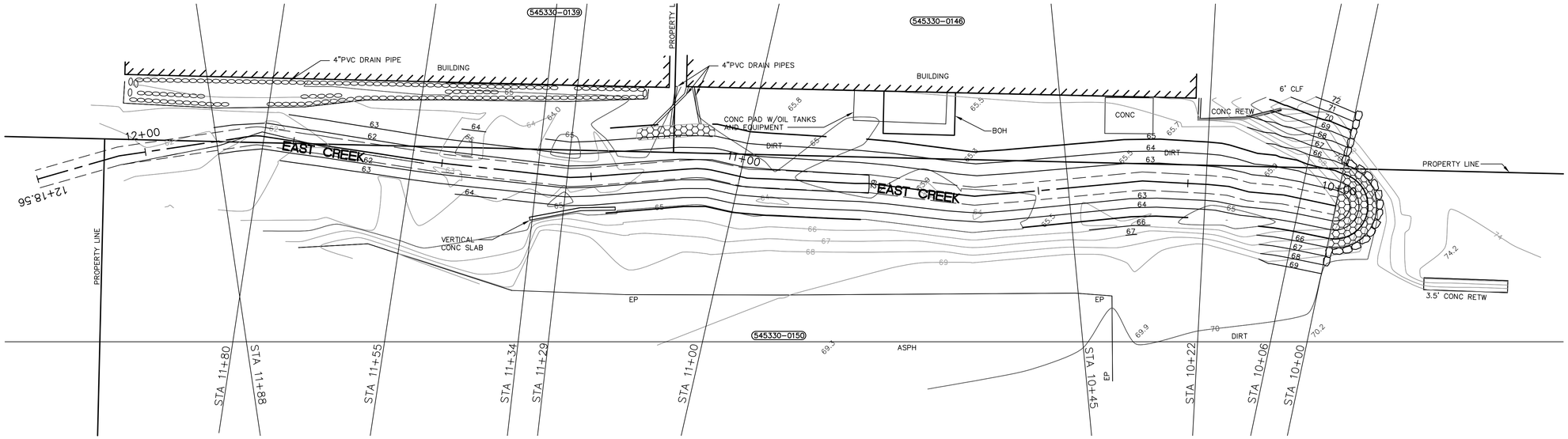

STREAM CHANNEL PLAN

SCALE : 1" = 10'

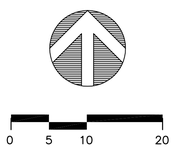

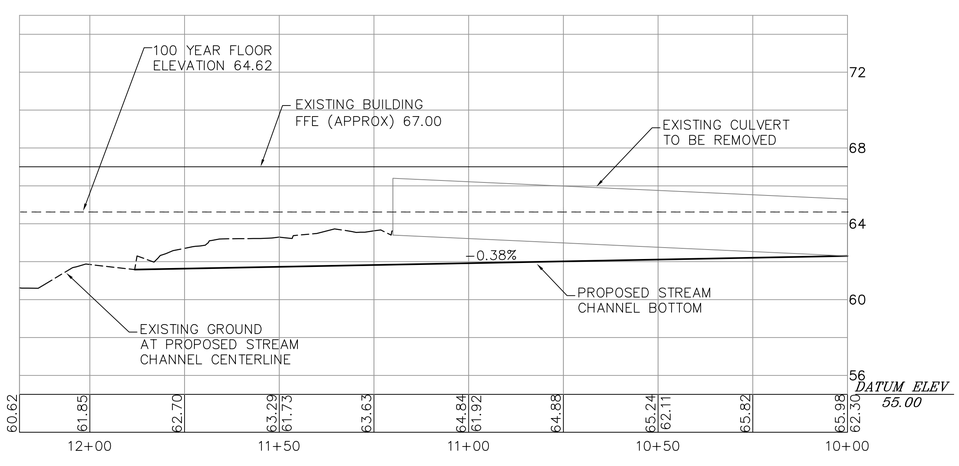

STREAM CHANNEL PROFILE

SCALE:
H - 1" = 20'
V - 1" = 4'

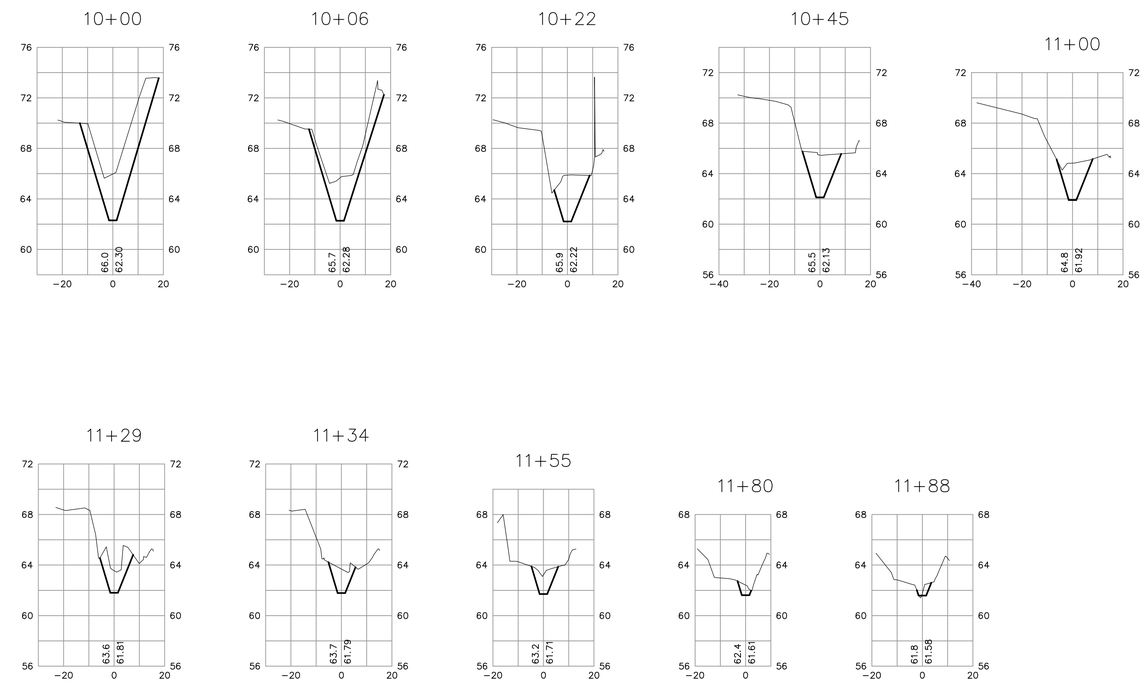

STREAM CHANNEL CROSS SECTIONS

SCALE:
H - 1" = 30'
V - 1" = 4'

PERMIT SUBMITTAL- NOT FOR CONSTRUCTION

gbk 08/20/08 10:07am - P:\a\AMIN00000001\0400CAD\LA\dwg\AMIN1_SR3.dwg

PROFILE AND CROSS SECTIONS
EAST CREEK REHABILITATION PROJECT
A + M COMPLETE AUTO AND TRUCK REPAIR, INC
BELLEVUE, WASHINGTON

DAVID EVANS AND ASSOCIATES INC.
415 - 118th Avenue SE
Bellevue Washington 98005-3518
Phone: 425.519.6500

REVISIONS: APPD.

DATE: AUGUST 18, 2008
DESIGN: GBK
DRAWN: GBK
CHECKED: JCGA
REVISION NUMBER:

SCALE: AS SHOWN

PROJECT NUMBER:
AMIN00000001

DRAWING FILE:

STATE OF WASHINGTON REGISTERED LANDSCAPE ARCHITECT
JONATHAN C. GAGE
CERTIFICATE NO. 952

SHEET NO.
SR-3
OF 5

NW 1/4 SEC. 10, TWP 24 N., RNG. 05 E., W.M.

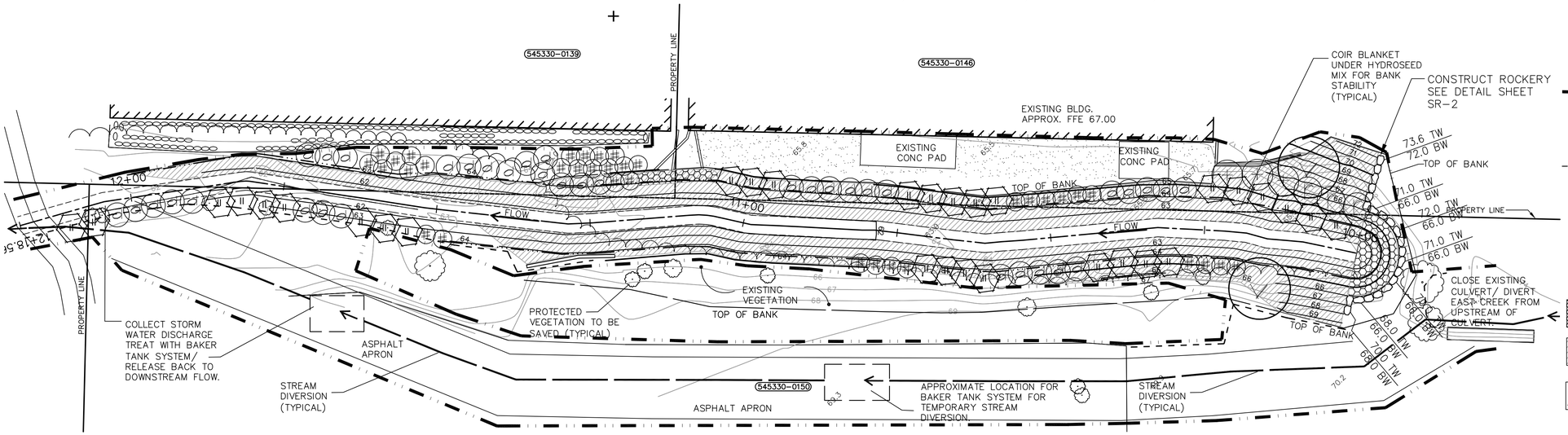

LEGEND:

- STREAM FLOW ARROW
- LIMIT OF WORK/ HIGH VISIBILITY FENCE
- STRAW WATTLES
- TOP OF SLOPE
- TOE OF SLOPE
- ORDINARY HIGH WATER MARK
- STREAM CENTER LINE
- PROPOSED CONTOUR
- EXISTING CONTOUR
- 8' QUARRY SPALL ARMOUR
- HYDROSEED MIX/COIR EROSION CONTROL FABRIC
- ¾" MINUS CLEAN GRAVEL

PLANT SCHEDULE

BOTANICAL NAME	COMMON NAME	QUANTITY	CONDITION	SIZE (HT)	REMARKS
TREES					
SALIX LASIANDRA	PACIFIC WILLOW	496	STAKES	36"	24" O.C.
NOTE: EACH WILLOW SYMBOL IS EQUAL TO 16 STAKES.					
SHRUBS/GROUNDCOVERS					
CORNUS SERICEA	RED OSIER DOGWOOD	37	2 GAL.	3' MIN. HT.	4' O.C.
LONICERA INVOLUCRATA	BLACK TWINBERRY	35	2 GAL.	3' MIN. HT.	4' O.C.
ACER CIRCINATUM	VINE MAPLE	2	2 GAL.	3' MIN. HT.	4' O.C.
ROSA NUTKANA	NOOTKA ROSE	3	2 GAL.	3' MIN. HT.	4' O.C.
SYMPHORICARPOS ALBUS	SNOWBERRY	3	2 GAL.	3' MIN. HT.	4' O.C.

HYDROSEED MIX

KIND/VARIETY	% BY WEIGHT	MIN. % GERM
RICE CUTGRASS	45%	90%
WESTERN MANA GRASS	40%	90%
CANADA REED	10%	90%
SPIKE BENTGRASS	3%	90%
WOOL-GRASS	2%	90%

APPLICATION RATE:	120 LBS/ACRE
WOOD CELLULOSE FIBER MULCH:	2,000 LBS/ACRE
14N-14P-14K FERTILIZER:	255 LBS/ACRE
GUAR TACKIFIER:	40 LBS/ACRE

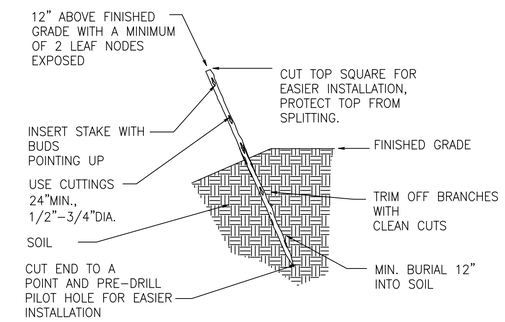

LIVE STAKE PLANTING

NOT TO SCALE

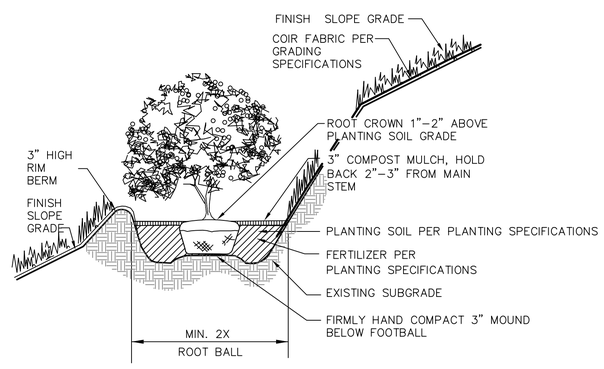

EVERGREEN/ DECIDUOUS SHRUB PLANTING (ON SLOPES)

NOT TO SCALE

LANDSCAPE NOTES:

All plant material, planting techniques and seeding activities shall conform to typical landscape industry standards. Plants shall be native to the Pacific Northwest and grown in the Puget Sound lowland.

All nursery grown plants shall be containerized, ball and burlap or bare root stock in conformance with ANSI Z60.1-2004. Provide only sound, healthy vigorous plants, free of defects, diseases and all forms of infestation.

The Landscape Architect/Stream Biologist will inspect plant materials to verify conformance to the plant schedule and to plant characteristics. The Landscape Architect/Stream Biologist reserves the right to require replacement or substitution of plants that are deemed unsuitable. The Landscape Architect/Stream Biologist will verify plant layout prior to installation.

Dig, pack, transport and handle all plants with care to ensure protection from injury. Store plants in the manner necessary to accommodate their horticultural requirements. Heel-in plants if necessary to keep them from drying out.

The contractor shall verify that conditions are suitable for plant installation. Any conditions detrimental to plant growth (e.g. standing water, obstructions, rubble) shall be resolved prior to plant installation or resume when conditions allow. Beginning of work constitutes acceptance of conditions as satisfactory.

Excavate circular plant pits a minimum of 2 times the root ball size with vertical sides and install plants as shown on the planting detail. Backfill plant pits with planting soil.

Planting soil shall be topsoil (Cedar Grove two way mix or approved equal) in all stream channel planting areas.

Prior to backfilling of plant pits, place mychorrhizae inoculant (Bio-Organics Endomyhcorrhizal Inoculant, or approved equivalent) around root ball in accordance with manufacturer's written instructions.

Add hydrated Soil Moist or approved equivalent, to the planting soil backfill of all plants installed in areas that won't flood. Follow manufacturer's specifications for directions for use and application rates.

Following installation of all planting materials, all bases shall receive three (3) inches of compost mulch in an area equal to 2x rootball diameter.

Contractor shall warranty all plants and materials for a period of one year from final acceptance.

Stream rehabilitation area shall be irrigated either by hand, (water truck) or temporary on grade irrigation system designed by Contractor. The Contractor shall provide sources for water and electricity. The Contractor shall provide isolation valve and connection to water meter, backflow prevention and controller.

The irrigation system shall be set by Contractor to allow for 1.0 inch of precipitation per week (whenever natural rainfall is insufficient) between May 15 and October 31st. Irrigation is required within all planting areas for at least one growing season following planting to ensure adequate plant establishment.

It is the Contractors responsibility to maintain the irrigation system during the duration of the warranty period. At the end of the one year warranty period, the Contractor will disassemble and remove the irrigation system from the planting areas.

0 5 10 20

CALL BEFORE YOU DIG
Call: TOLL FREE
1-800-424-5555

PERMIT SUBMITTAL- NOT FOR CONSTRUCTION

STATE OF WASHINGTON REGISTERED LANDSCAPE ARCHITECT

JONATHAN C. GAGE
CERTIFICATE NO. 952

LANDSCAPE PLAN
EAST CREEK REHABILITATION PROJECT
A + M COMPLETE AUTO AND TRUCK REPAIR, INC
BELLEVUE, WASHINGTON

DAVID EVANS AND ASSOCIATES INC.
415 - 118th Avenue SE
Bellevue Washington 98005-3518
Phone: 425.519.6500

REVISIONS:	APPD.

DATE: AUGUST 18, 2008
DESIGN: GBK
DRAWN: GBK
CHECKED: JCGA
REVISION NUMBER:

SCALE: 1"=10'

PROJECT NUMBER: AMIN00000001

DRAWING FILE:

SHEET NO. SR-4 OF 5

gbk 08/20/08 10:10am - P:\a\AMIN00000001\0400CAD\LA\dwg\AMIN1_SR4.dwg

1.0 MITIGATION PLAN OVERVIEW

The project is called the East Creek Rehabilitation Project, and is located in the City of Bellevue, Washington. East Creek rehabilitation will occur by removing an existing culvert, regrading 219 lineal feet of stream channel, 1,202 square feet of riparian buffer enhancement and installing erosion and sediment control measures. Regraded areas total 3,110 square feet of which 1,908 square feet are below the ordinary high water mark.

2.0 MITIGATION GOALS AND OBJECTIVES

The rehabilitation plan has the following goals:

1. Daylighting 120 lineal feet of culverted stream; 2) regrading the stream channel to achieve a positive flow and remain within its banks during a hundred year storm period; 3) replant the riparian buffer with native trees and shrubs for habitat diversity.

3.0 PERFORMANCE STANDARDS

A specific set of performance standards have been established that correspond to the stated mitigation goals and objectives. These standards are the primary factors that will be used to judge the success of the rehabilitation project. It will be important to evaluate the development of the stream rehabilitation program over the entire monitoring period when determining whether each individual standard has been met or not. While specific performance criteria provide important benchmarks and will help to direct maintenance and contingency efforts, the success of rehabilitation must be evaluated against the goals and objectives of the overall program. By monitoring the project and comparing monitoring results to performance standards, a determination can be made as to the need for implementing maintenance efforts or the contingency plan. The performance standards are:

1. The condition of the stream channel in East Creek will be monitored in years 1,2,3,4 and 5. Monitoring will include documentation of fish use, condition of stream morphology and assessment of fish passage potential through the project reach. Collected stream condition data will be included in the annual mitigation monitoring reports.

2. There will be 100 percent survival of installed plant species at the end of the one year warranty period. The warranty inspection will be conducted by a qualified Wetland Biologist or Landscape Architect. The results of the inspection will be tabulated and presented to the Owner who shall inform the contractor with the recommendations for replacement.

3. Percent survival of riparian plantings as measured in year 1–5 are as follows: Year 1, 100 percent; Year 2, 80 percent; Year 3, 75 percent; Year 4, 70 percent and Year 5, 70 percent.

4. The percent cover of non–native invasive species will be less than 15 percent after five years in the stream rehabilitation areas. No Japanese Knotweed shall be permitted within the stream rehabilitation areas during the 5 year monitoring period. All Japanese Knotweed observed shall be removed with maintenance procedures and discarded off site.

4.0 MONITORING PLAN

The objective of the monitoring program over its five–year duration will be to: (1) verify condition of daylighted stream channel : (2) assess revegetation success in the riparian areas, and (3) verify the non–native invasive species are not precluding establishment of the planted mitigation species. Results of all monitoring will be included in Year 1, 2, 3, 4, and 5 monitoring reports submitted to the City and Corps of Engineers by December 31 of each monitoring year. The monitoring results will be related to the performance standards and recommendations will be made based on these findings.

4.1 MONITORING SCHEDULE

Table 1: Monitoring Schedule

Monitoring Year	Task	Expected Date
Construction	Mitigation Installation	2009
Year 0	Planting Complete As–Builts	September 2009 December 2009
Year 1	Stream Channel Inspection, Warranty Plant Inspection and Quantitative Vegetation Monitoring, Monitoring Report	September 2010 December 2010
Year 2	Stream Channel Inspection, Vegetation Monitoring Monitoring Report	September 2011 December 2011
Year 3	Stream channel Inspection, Vegetation Monitoring Monitoring Report	September 2012 December 2012
Year 4	Stream channel Inspection, Vegetation Monitoring Monitoring Report	September 2013 December 2013
Year 5	Stream channel Inspection, Vegetation Monitoring Final Monitoring Report	September 2014 December 2014

4.2 STREAM CHANNEL ESTABLISHMENT

The success of the stream rehabilitation will be evaluated during Years 1, 2, 3, 4, and 5 of the monitoring program. A total count of all fish, habitat types and fish barriers will be conducted each year. Rehabilitation success will be evaluated by documenting increasing fish use and habitat type diversity. No fish barriers shall develop during the monitoring time frame. In addition to the monitoring a general visual inspection with photographs will be conducted.

4.3 VEGETATION ESTABLISHMENT

The establishment and success of the rehabilitation plantings will be evaluated during Years 1, 2, 3, 4, and 5 of the monitoring program. A total count of all trees and shrubs will be conducted one year after installation. This first–year monitoring will serve as the one–year warranty inspection.

Planting success in the mitigation areas will be evaluated by assessing percent survival.

In addition to the quantitative monitoring, a general visual inspection of the mitigation areas will be conducted each year to determine the condition of the plant materials and the need for removal of invasive plants. Photopoints will be established at each mitigation area to allow a visual comparison of vegetative development. Photos will be taken from established photopoint locations, in the mitigation areas, during the annual monitoring visits. Photos will be included in the annual mitigation monitoring reports.

5.0 MAINTENANCE PLAN

Maintenance within the rehabilitation areas will be performed by the Landscape Contractor during the one year warranty period. Maintenance tasks following the warranty period will be directed by the owner or under direction of the Owner's Representative. Required maintenance activities are included in Table 2.

Table 2: Maintenance Tasks

Activity	Schedule	Special Notes
Replace all failed mitigation plantings.	One year following planting. Then as required to meet performance standards.	By landscape contractor.
Temporary irrigation of new plantings.	At least weekly, June through September for two years following planting.	All plants must receive one inch of water during each watering by landscape contractor.
Weeding	At least once each year for years 1, 2, 3, 4, and 5 of the five year monitoring period	Trees and shrubs must be weeded to the dripline and mulch maintained at 2 inches depth. By landscape contractor.
Clear and grub undesirable invasive plants from planting area. Undesirable species include: Himalayan Blackberry Evergreen Blackberry Scot's Broom English Ivy Purple Loose Strife Morning Glory Climbing Nightshade Japanese Knotweed Reed Canarygrass	As required in biannual monitoring reports.	Removal should be as directed by monitoring biologist. Clearing and grubbing should be accomplished by physically (non–mechanical) removing plant materials (including root masses) or hand trimming by landscape contractor. Weeds must be properly disposed of off–site.

STATE OF
WASHINGTON
REGISTERED
LANDSCAPE ARCHITECT

JONATHAN C. GAGE
CERTIFICATE NO. 952

PERMIT SUBMITTAL- NOT FOR CONSTRUCTION

STREAM MONITORING PLAN

EAST CREEK REHABILITATION PROJECT

A + M COMPLETE AUTO AND TRUCK REPAIR, INC

BELLEVUE, WASHINGTON

DAVID EVANS AND ASSOCIATES INC.
415 - 118th Avenue SE
Bellevue Washington 98005-3518
Phone: 425.519.6500

REVISIONS: APPD.

DATE: AUGUST 18, 2008
DESIGN: GBK
DRAWN: GBK
CHECKED: JCGA
REVISION NUMBER:

SCALE: N/A

PROJECT NUMBER:
AMIN00000001

DRAWING FILE:

SHEET NO.
SR-5
OF 5

APPENDIX B

USFWS SPECIES LIST

This page intentionally left blank.

LISTED AND PROPOSED ENDANGERED AND THREATENED SPECIES AND CRITICAL HABITAT; CANDIDATE SPECIES; AND SPECIES OF CONCERN IN KING COUNTY AS PREPARED BY THE U.S. FISH AND WILDLIFE SERVICE WESTERN WASHINGTON FISH AND WILDLIFE OFFICE

(Revised November 1, 2007)

LISTED

Bull trout (*Salvelinus confluentus*)

Canada lynx (*Lynx canadensis*)

Gray wolf (*Canis lupus*)

Grizzly bear (*Ursus arctos = U. a. horribilis*)

Marbled murrelet (*Brachyramphus marmoratus*)

Northern spotted owl (*Strix occidentalis caurina*)

Major concerns that should be addressed in your Biological Assessment of project impacts to listed species include:

1. Level of use of the project area by listed species.
2. Effect of the project on listed species' primary food stocks, prey species, and foraging areas in all areas influenced by the project.
3. Impacts from project activities and implementation (e.g., increased noise levels, increased human activity and/or access, loss or degradation of habitat) that may result in disturbance to listed species and/or their avoidance of the project area.

Castilleja levisecta (golden paintbrush) [historic]

Major concerns that should be addressed in your Biological Assessment of project impacts to listed plant species include:

1. Distribution of taxon in project vicinity.
2. Disturbance (trampling, uprooting, collecting, etc.) of individual plants and loss of habitat.
3. Changes in hydrology where taxon is found.

DESIGNATED

Critical habitat for bull trout

Critical habitat for the marbled murrelet

Critical habitat for the northern spotted owl

PROPOSED

None

CANDIDATE

Oregon spotted frog (*Rana pretiosa*)
Yellow-billed cuckoo (*Coccyzus americanus*)

SPECIES OF CONCERN

Bald eagle (*Haliaeetus leucocephalus*)
Beller's ground beetle (*Agonum belleri*)
California wolverine (*Gulo gulo luteus*)
Cascades frog (*Rana cascadae*)
Hatch's click beetle (*Eanus hatchi*)
Larch Mountain salamander (*Plethodon larselli*)

Long-eared myotis (*Myotis evotis*)
Long-legged myotis (*Myotis volans*)
Northern goshawk (*Accipiter gentilis*)
Northern sea otter (*Enhydra lutris kenyoni*)
Northwestern pond turtle (*Emys* (= *Clemmys*) *marmorata marmorata*)
Olive-sided flycatcher (*Contopus cooperi*)
Pacific lamprey (*Lampetra tridentata*)
Pacific Townsend=s big-eared bat (*Corynorhinus townsendii townsendii*)
Peregrine falcon (*Falco peregrinus*)
River lamprey (*Lampetra ayresi*)
Tailed frog (*Ascaphus truei*)
Valley silverspot (*Speyeria zerene bremeri*)
Western toad (*Bufo boreas*)
Aster curtus (white-top aster)
Botrychium pedunculosum (stalked moonwort)
Cimicifuga elata (tall bugbane)

APPENDIX C

NMFS SPECIES LIST

This page intentionally left blank.

Endangered Species Act Status of West Coast Salmon & Steelhead

(Updated Feb. 26, 2008)

Species[1]			*Endangered Species Act Listing Status*[2]	*ESA Listing Actions Under Review*
Sockeye Salmon (*Oncorhynchus nerka*)	1	Snake River	***Endangered***	
	2	Ozette Lake	***Threatened***	
	3	Baker River	*Not Warranted*	
	4	Okanogan River	*Not Warranted*	
	5	Lake Wenatchee	*Not Warranted*	
	6	Quinalt Lake	*Not Warranted*	
	7	Lake Pleasant	*Not Warranted*	
Chinook Salmon (*O. tshawytscha*)	8	Sacramento River Winter-run	***Endangered***	
	9	Upper Columbia River Spring-run	***Endangered***	
	10	Snake River Spring/Summer-run	***Threatened***	
	11	Snake River Fall-run	***Threatened***	
	12	Puget Sound	***Threatened***	
	13	Lower Columbia River	***Threatened***	
	14	Upper Willamette River	***Threatened***	
	15	Central Valley Spring-run	***Threatened***	
	16	California Coastal	***Threatened***	
	17	Central Valley Fall and Late Fall-run	***Species of Concern***	
	18	Upper Klamath-Trinity Rivers	*Not Warranted*	
	19	Oregon Coast	*Not Warranted*	
	20	Washington Coast	*Not Warranted*	
	21	Middle Columbia River spring-run	*Not Warranted*	
	22	Upper Columbia River summer/fall-run	*Not Warranted*	
	23	Southern Oregon and Northern California Coast	*Not Warranted*	
	24	Deschutes River summer/fall-run	*Not Warranted*	
Coho Salmon (*O. kisutch*)	25	Central California Coast	***Endangered***	
	26	Southern Oregon/Northern California	***Threatened***	
	27	Lower Columbia River	***Threatened***	• Critical habitat
	28	Oregon Coast[2]	***Threatened***	
	29	Southwest Washington	*Undetermined*	
	30	Puget Sound/Strait of Georgia	***Species of Concern***	
	31	Olympic Peninsula	*Not Warranted*	
Chum Salmon (*O. keta*)	32	Hood Canal Summer-run	***Threatened***	
	33	Columbia River	***Threatened***	
	34	Puget Sound/Strait of Georgia	*Not Warranted*	
	35	Pacific Coast	*Not Warranted*	
Steelhead (*O. mykiss*)	36	Southern California	***Endangered***	
	37	Upper Columbia River	***Endangered***	
	38	Central California Coast	***Threatened***	
	39	South Central California Coast	***Threatened***	
	40	Snake River Basin	***Threatened***	
	41	Lower Columbia River	***Threatened***	
	42	California Central Valley	***Threatened***	
	43	Upper Willamette River	***Threatened***	
	44	Middle Columbia River	***Threatened***	
	45	Northern California	***Threatened***	
	46	Oregon Coast	***Species of Concern***	
	47	Southwest Washington	*Not Warranted*	
	48	Olympic Peninsula	*Not Warranted*	
	49	Puget Sound	***Threatened***	• Critical habitat • Protective Regulations
	50	Klamath Mountains Province	*Not Warranted*	
Pink Salmon (*O. gorbuscha*)	51	Even-year	*Not Warranted*	
	52	Odd-year	*Not Warranted*	

1 The ESA defines a "species" to include any distinct population segment of any species of vertebrate fish or wildlife. For Pacific salmon, NOAA Fisheries considers an evolutionarily significant unit, or "ESU," a "species" under the ESA. For Pacific steelhead, NOAA Fisheries has delineated distinct population egments (DPSs) for consideration as "species" under the ESA

2 On Feb. 11, 2008, NOAA Fisheries published a final determination listing Oregon coast coho as threatened (73FR7816). This final rule also designated critical habitat and issued final protective regulations. The listing, critical habitat and protective regulations are effective on **May 12, 2008**.

APPENDIX D

SITE PHOTOS

CPP conveying East Creek facing upstream from west end of A&M Auto building. HD Folwer property on the right.

Currogated Plastic Culvert from east end of A & M Auto Property. HD Folwer property on left.

East Creek and CPP facing upstream to the east.

East Creek facing downstream from west end of A&M Auto building. Bellevue Automotive Detail building on the right of picture.

Bellevue Auto Detail building, rip rap, and East Creek in foreground. A&M Auto, Outlet of CPP, and HD Folwer property in background.

East Creek just downstream of CPP. Note streambed substrates mostly gravels and sand.

Old silt fence in channel holding back flow and debris.

Cascade and drop off just downstream of old silt fence.

APPENDIX E

USFWS WETLANDS MAP

This page intentionally left blank.

East Creek Tributary Wetlands

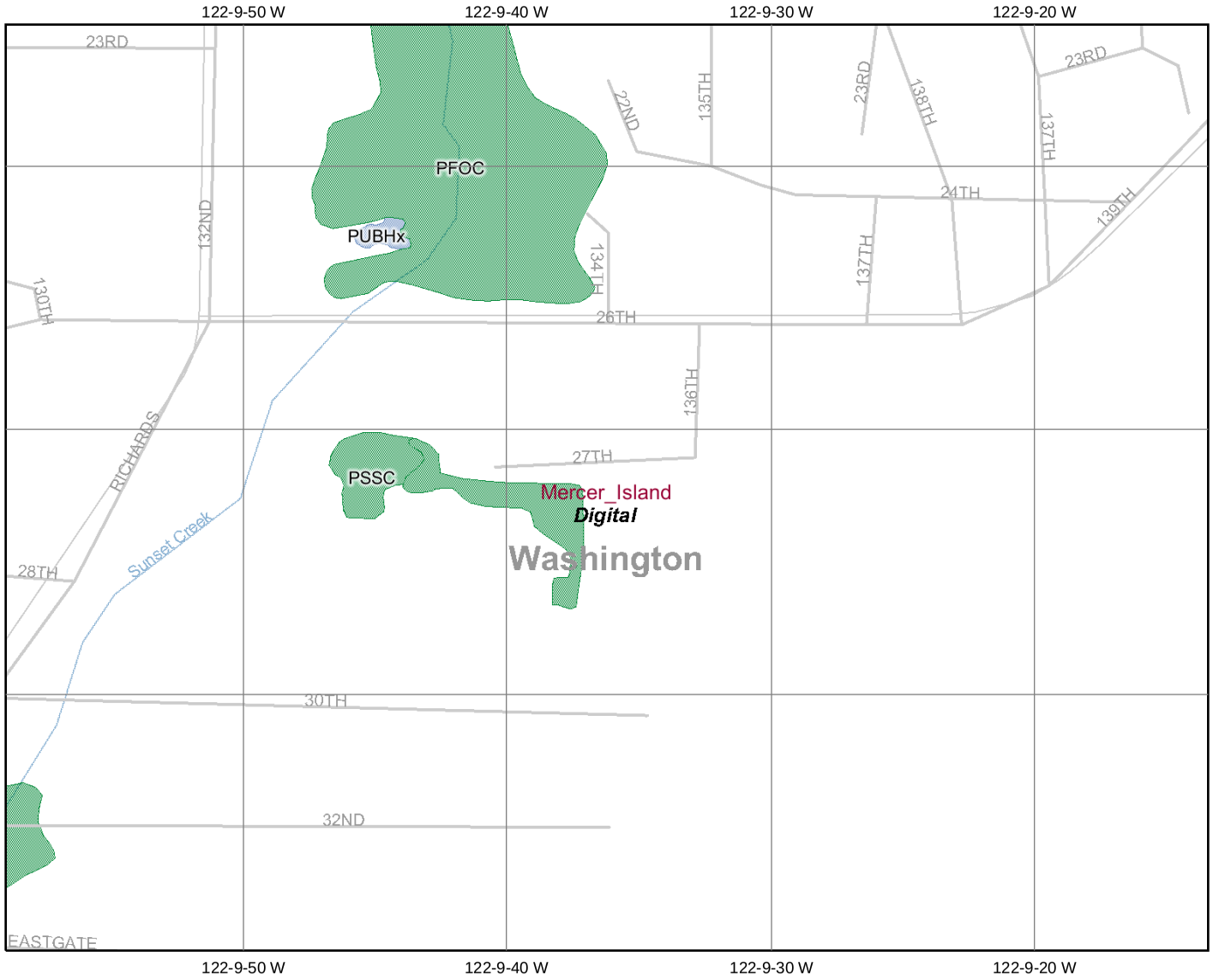

Map center: 47° 35' 7.8" N, 122° 9' 36.2" W

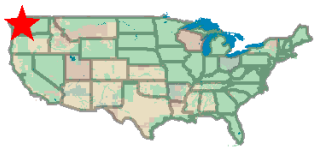

Legend

CONUS_wet_scan

- 0
- 1
- Out of range

Interstate

Major Roads

- Other Road
- Interstate
- State highway
- US highway

Roads

Cities

USGS Quad Index 24K

Lower 48 Wetland Polygons

- Estuarine and Marine Deepwater
- Estuarine and Marine Wetland
- Freshwater Emergent Wetland
- Freshwater Forested/Shrub Wetland
- Freshwater Pond
- Lake
- Other
- Riverine

Lower 48 Available Wetland Data

- Non-Digital
- Digital
- No Data
- Scan

NHD Streams

Counties 100K

States 100K

South America

North America

N

Scale: 1:7,572

This map is a user generated static output from an Internet mapping site and is for general reference only. Data layers that appear on this map may or may not be accurate, current, or otherwise reliable. THIS MAP IS NOT TO BE USED FOR NAVIGATION.

APPENDIX F

TURBIDITY MONITORING DATA SHEET

This page intentionally left blank.

Turbidity Monitoring Data Sheet

Project Name & Permit Number

Site Address

Monitor Name, Company, Phone Number

Date & Time of Sample Baseline Turbidity NTU

Weather Conditions

Upstream Location / Reading (NTU)	Downstream Location / Reading (NTU)	Turbidity Increase (Downstream - Upstream) (NTU)	Allowable Turbidity Increase (NTU)	Turbidity Increase Above Standard? (Y/N)[1]	Contractor Notified of results? (Y/N)

Corrective Measures Taken By Contractor (if turbidity increase is above standard):

Other Comments:

(1) Clearing and Grading Inspector must be notified by telephone if standard is exceeded.

Fax to the Clearing and Grading Inspector at (425) 452-7930

Attachment 3
SEPA Environmental Checklist

DEPARTMENT OF PLANNING AND COMMUNITY DEVELOPMENT
ENVIRONMENTAL COORDINATOR
450 110th Ave NE., P.O. BOX 90012
BELLEVUE, WA 98009-9012

OPTIONAL DETERMINATION OF NON-SIGNIFICANCE (DNS) NOTICE MATERIALS

The attached materials are being sent to you pursuant to the requirements for the Optional DNS Process (WAC 197-11-355). A DNS on the attached proposal is likely. This may be the only opportunity to comment on environmental impacts of the proposal. Mitigation measures from standard codes will apply. Project review may require mitigation regardless of whether an EIS is prepared. A copy of the subsequent threshold determination for this proposal may be obtained upon request.

File No.	08-129544-LO
Project Name/Address:	East Creek Rehabilitation 13451 SE 27th Place
Planner:	Kevin LeClair
Phone Number:	425-452-2928
Minimum Comment Period:	**October 2, 2008**

Materials included in this Notice:

- [x] Blue Bulletin
- [x] Checklist
- [x] Vicinity Map
- [X] Plans
- [ ] Other:

East Creek Rehabilitation
Bellevue File # 08-129544-LO
13451 SE 27th Place

REVIEWED
By Kevin LeClair at 11:00 am, Sep 10, 2008

WAC 197-11-960 Environmental checklist.

ENVIRONMENTAL CHECKLIST

Purpose of checklist:

The State Environmental Policy Act (SEPA), chapter 43.21C RCW, requires all governmental agencies to consider the environmental impacts of a proposal before making decisions. An environmental impact statement (EIS) must be prepared for all proposals with probable significant adverse impacts on the quality of the environment. The purpose of this checklist is to provide information to help you and the agency identify impacts from your proposal (and to reduce or avoid impacts from the proposal, if it can be done) and to help the agency decide whether an EIS is required.

Instructions for applicants:

This environmental checklist asks you to describe some basic information about your proposal. Governmental agencies use this checklist to determine whether the environmental impacts of your proposal are significant, requiring preparation of an EIS. Answer the questions briefly, with the most precise information known, or give the best description you can.

You must answer each question accurately and carefully, to the best of your knowledge. In most cases, you should be able to answer the questions from your own observations or project plans without the need to hire experts. If you really do not know the answer, or if a question does not apply to your proposal, write "do not know" or "does not apply." Complete answers to the questions now may avoid unnecessary delays later.

Some questions ask about governmental regulations, such as zoning, shoreline, and landmark designations. Answer these questions if you can. If you have problems, the governmental agencies can assist you.

The checklist questions apply to all parts of your proposal, even if you plan to do them over a period of time or on different parcels of land. Attach any additional information that will help describe your proposal or its environmental effects. The agency to which you submit this checklist may ask you to explain your answers or provide additional information reasonably related to determining if there may be significant adverse impact.

Use of checklist for nonproject proposals:

Complete this checklist for nonproject proposals, even though questions may be answered "does not apply." IN ADDITION, complete the SUPPLEMENTAL SHEET FOR NONPROJECT ACTIONS (part D).

For nonproject actions, the references in the checklist to the words "project," "applicant," and "property or site" should be read as "proposal," "proposer," and "affected geographic area," respectively.

A. BACKGROUND

1. Name of proposed project, if applicable: **A&M Auto East Creek Restoration.**
2. Name of applicant: **Paul Vedmed.**
3. Address and phone number of applicant and contact person:

   Paul Vedmed
   13451 SE 27th Pl.
   Bellevue, WA 98005
   Phone # 425.641.9455

RECEIVED
AUG 21 2008
PERMIT PROCESSING

4. Date checklist prepared: **August 7, 2008.**
5. Agency requesting checklist: **City of Bellevue.**
6. Proposed timing or schedule (including phasing, if applicable): **Summer 2009.**
7. Do you have any plans for future additions, expansion, or further activity related to or connected with this proposal? If yes, explain.

   No.

8. List any environmental information you know about that has been prepared, or will be prepared, directly related to this proposal.

   - **Critical Areas Report**
   - **JARPA Application**
   - **Rehabilitation Plan**

9. Do you know whether applications are pending for governmental approvals of other proposals directly affecting the property covered by your proposal? If yes, explain.

REVIEWED
By Kevin LeClair at 11:02 am, Sep 10, 2008

No.

10. List any government approvals or permits that will be needed for your proposal, if known.

Pending approvals include the following:

- **Washington Department of Ecology**
- **Washington Department of Fish and Wildlife – Hydraulic Project Approval**
- **City of Bellevue Clearing and Grading, and Critical Areas Review**

Culvert was installed without permits.

11. Give brief, complete description of your proposal, including the proposed uses and the size of the project and site. There are several questions later in this checklist that ask you to describe certain aspects of your proposal. You do not need to repeat those answers on this page. (Lead agencies may modify this form to include additional specific information on project description.)

The major components of this project include the removal of an existing 120-foot 36-inch culvert, regrading of 219 feet of the existing stream bed to create a positive slope, streambed gravel enhancement, and revegetation of stream buffer. Plantings of native vegetation will take place along the north and south edges of the creek and within the upland stream buffer. A mitigation plan has been developed that outlines the proposed rehabilitation measures for project-related impacts.

The overall project length is approximately 219 lineal feet of stream, while the width of impact is approximately 20 feet. The total project footprint is approximately 3,110 square feet, which includes 1,908 square feet of stream channel and 1,202 square feet of upland buffer. The side slopes of the banks are 2 horizontal :1 vertical on the north bank and 1.5 horizontal :1 vertical on the south bank.

Construction would require the use of different types of equipment including a tracked excavator, back hoe, dump trucks, utility trucks, generators, pumps, chain saws, and various hand tools. No pile driving or blasting is required. Staging of equipment and spoils would occur on the HD Fowler property. Construction is anticipated to be completed within approximately one month.

12. Location of the proposal. Give sufficient information for a person to understand the precise location of your proposed project, including a street address, if any, and section, township, and range, if known. If a proposal would occur over a range of area, provide the range or boundaries of the site(s). Provide a legal description, site plan, vicinity map, and topographic map, if reasonably available. While you should submit any plans required by the agency, you are not required to duplicate maps or detailed plans submitted with any permit applications related to this checklist.

The project site is located within the City of Bellevue, King County, Washington (Section 10, Township 24 north, Range 05 east, W.M.). The proposed stream restoration would be located on East Creek, east of Interstate 405, north of Interstate 90. East Creek is tributary to Richards Creek. The project site is in Water Resource Inventory Area (WRIA) 8: Cedar – Sammamish Basin. More specifically, the project site is within the Cedar River/Lake Washington Watershed, while the approximate latitude and longitude of the central project area is 47° 35' 56.72" N by 122° 19' 52.9" W at an elevation of 60-68 feet above sea level.
The project will take place on the following tax parcels: 545330-0146 and 545330-0139 (A&M Auto Repair) and 545330-0150 (HD Fowler Company).

REVIEWED
By Kevin LeClair at 11:02 am, Sep 10, 2008

B. ENVIRONMENTAL ELEMENTS

1. **Earth**

a. General description of the site (circle one): Flat, rolling, hilly, steep slopes, mountainous, other . . . . . .

The site is generally flat, sloping toward the stream channel. The surrounding areas are flat, paved lots.

b. What is the steepest slope on the site (approximate percent slope)?

The north streambank on the HD Fowler property is a 1 horizontal :1 vertical slope (50 percent).

c. What general types of soils are found on the site (for example, clay, sand, gravel, peat, muck)? If you know the classification of agricultural soils, specify them and note any prime farmland.

The U.S. Department of Agriculture (USDA) Soil Conservation Service (SCS) mapped soils in the project area as Urban land (Ur). Urban land is defined as soil that has been modified by disturbance of the natural layers with additions of fill material several feet thick. The erosion hazard is slight to moderate. The USDA SCS Hydric Soils of the State of Washington (USDA 1991) list for King County does not include Urban land as a hydric soil.

d. Are there surface indications or history of unstable soils in the immediate vicinity? If so, describe.

No.

e. Describe the purpose, type, and approximate quantities of any filling or grading proposed. Indicate source of fill.

Stream restoration will require approximately 120 cubic yards of excavation of sand, silt, gravel, and cobble, from the stream channel. The purpose of this excavation is to regrade the stream channel to a positive slope. 20 cubic yards of gravel will be placed within the channel bottom to create appropriate substrate for resident fish use. This gravel will be obtained from a commercial source.

f. Could erosion occur as a result of clearing, construction, or use? If so, generally describe.

Yes, erosion could occur during construction.

Erosion on the site will be controlled through enforcement of clearing and grading codes in BCC 23.76 and required application TESC best management practices.

g. About what percent of the site will be covered with impervious surfaces after project construction (for example, asphalt or buildings)?

< 5%

The entire property is almost entirely covered by impervious surface. This project will not change the overall coverage by impervious on the subject property.

h. Proposed measures to reduce or control erosion, or other impacts to the earth, if any:

General

- **A Temporary Erosion and Sediment Control Plan will be developed and implemented.**
- **A qualified Erosion and Control Inspector will review all sediment control measures twice per week during construction.**
- **Turbidity will be monitored per the Turbidity Monitoring Plan as required by the City of Bellevue.**
- **A Spill Prevention Control and Countermeasures plan that meets the standards will be developed and implemented for the project to ensure that all pollutants and products will be controlled and contained.**

REVIEWED
By Kevin LeClair at 11:02 am, Sep 10, 2008

- **Seasonal restrictions applied to work conducted below the ordinary high water mark (OHWM) will be as required by a Hydraulic Project Approval (HPA) issued by the WDFW.**
- **Construction impacts will be confined to the minimum area necessary to complete the project.**
- **Removal of riparian vegetation will be minimized as much as possible.**
- **Implementation of the Mitigation Plan prepared for this project will occur.**

Water Quality/Erosion Control

- **BMPs will be installed according to City of Bellevue standards and will be inspected and maintained throughout the life of the project.**
- **Staging and soil stockpile areas will be limited to those outlined in the clearing and grading permit. Staging areas will be fenced.**
- **Spill kits will be kept on-site.**
- **If present, fuels and other potentially hazardous materials will be kept in a secured area. Secured means fenced and locked during non-work hours.**
- **Secondary containment will be required for all hazardous materials. Spill containment is required for generators, parked equipment, porta-potty, fuels, solvents, etc.**
- **The project will comply with water quality conditions identified by Ecology.**
- **Wash water resulting from washdown of equipment or work areas will be contained for proper treatment and/or disposal, and will not be directly discharged into state waters.**
- **Oil, fuels, or chemicals will not be discharged to surface waters or onto land where there is a potential for reentry into surface waters.**
- **Cleaning solvents or chemicals used for tools or equipment cleaning will not be discharged to ground or surface waters.**
- **The contractor will regularly check fuel hoses, oil drums, oil or fuel transfer valves, fittings, etc. for leaks, and will maintain and store materials properly to prevent spills.**
- **BMPs will be used on all project activities to control and prevent sediments from entering aquatic systems.**

In-water and Over-water Work

- **Fish will be removed from the work area prior to any in-water work activities per the Fish Salvage Plan.**
- **Materials removed from below the OHWM, will be placed in an upland location where they cannot enter water bodies.**
- **Materials, such as riprap, placed within the water, will be free of sediment and/or other contaminants.**
- **Water pumped from the work area will be treated to remove suspended sediments prior to returning to the water body. Discharge will occur in such a manner as not to cause erosion.**
- **Mechanical equipment will not enter the stream channel until the project reach has been dewatered and fish salvage has been completed.**
- **Mechanical equipment operating in the project area will be inspected daily for leaks. Any equipment found to be leaking will immediately be fixed or removed from the project site.**

REVIEWED
By Kevin LeClair at 11:02 am, Sep 10, 2008

2. **Air**

a. What types of emissions to the air would result from the proposal (i.e., dust, automobile, odors, industrial wood smoke) during construction and when the project is completed? If any, generally describe and give approximate quantities if known.

Emissions would be limited to those generated by construction equipment during construction and maintenance.

Control of construction related dust and smoke is required by the clearing and grading code per BCC 23.76

b. Are there any off-site sources of emissions or odor that may affect your proposal? If so, generally describe.

No.

c. Proposed measures to reduce or control emissions or other impacts to air, if any:

None.

3. **Water**

a. Surface:

1) Is there any surface water body on or in the immediate vicinity of the site (including year-round and seasonal streams, saltwater, lakes, ponds, wetlands)? If yes, describe type and provide names. If appropriate, state what stream or river it flows into.

The proposed restoration would take place in a tributary to East Creek.

2) Will the project require any work over, in, or adjacent to (within 200 feet) the described waters? If yes, please describe and attach available plans.

Yes, proposed project is a stream rehabilitation and will require work in and adjacent to the stream channel. Please refer to A. Background question number 11 for a detailed response. Site plans are attached.

3) Estimate the amount of fill and dredge material that would be placed in or removed from surface water or wetlands and indicate the area of the site that would be affected. Indicate the source of fill material.

Culvert removal and channel grading will require approximately 170 cubic yards of excavation of sand, silt, gravel, and cobble from the East Creek channel. The excavation will occur at the upstream end of the channel and stop 219 feet downstream.

4) Will the proposal require surface water withdrawals or diversions? Give general description, purpose, and approximate quantities if known.

Yes, stream flow will be diverted around the project area during construction. The exact quantity is uncertain, but it is less than 10 cubic feet per second.

5) Does the proposal lie within a 100-year floodplain? If so, note location on the site plan.

No (King Co GIS data).

The property and project area are not within the 100-year floodplain, but it was flooding on the property that prompted the owner to install the culvert.

6) Does the proposal involve any discharges of waste materials to surface waters? If so, describe the type of waste and anticipated volume of discharge.

No.

b. Ground:

1) Will ground water be withdrawn, or will water be discharged to ground water? Give general description, purpose, and approximate quantities if known.

No.

REVIEWED
By Kevin LeClair at 11:02 am, Sep 10, 2008

2) Describe waste material that will be discharged into the ground from septic tanks or other sources, if any (for example: Domestic sewage; industrial, containing the following chemicals. . . ; agricultural; etc.). Describe the general size of the system, the number of such systems, the number of houses to be served (if applicable), or the number of animals or humans the system(s) are expected to serve.

Not Applicable.

c. Water runoff (including stormwater):

1) Describe the source of runoff (including storm water) and method of collection and disposal, if any (include quantities, if known). Where will this water flow? Will this water flow into other waters? If so, describe.

Water runoff would be limited to stormwater water from adjacent imperious surfaces (roof tops, parking lots, roads) flowing into the stream.

2) Could waste materials enter ground or surface waters? If so, generally describe.

No "waste materials" are present.

d. Proposed measures to reduce or control surface, ground, and runoff water impacts, if any:

See B.1.h. for a full list of measures.

4. **Plants**

a. Check or circle types of vegetation found on the site:

——— deciduous tree: alder, maple, aspen, other

——— evergreen tree: fir, cedar, pine, other

——— shrubs

——— grass

——— pasture

——— crop or grain

——— wet soil plants: cattail, buttercup, bullrush, skunk cabbage, other

——— water plants: water lily, eelgrass, milfoil, other

——— other types of vegetation

b. What kind and amount of vegetation will be removed or altered?

The total project footprint is 3,110 square feet, which includes 1,908 square feet of stream channel and 1,202 square feet of upland buffer. Grading of the stream will require the removal of some vegetation on the south bank of the stream. This would mainly be Himalayan blackberry, but will include three red alder greater than 6 inches diameter at breast height. Mature alders will be retained to the maximum extent possible. The north bank is currently unvegetated.

c. List threatened or endangered species known to be on or near the site.

No threatened or endangered plant species are known to occur at or near the project site according to Washington State Department of Natural Resources' Natural Heritage data.

REVIEWED
By Kevin LeClair at 11:02 am, Sep 10, 2008

d. Proposed landscaping, use of native plants, or other measures to preserve or enhance vegetation on the site, if any:

A mitigation plan has been prepared for this project that will add a significant amount of native vegetation to the stream buffer.

5. **Animals**

a. Circle any birds and animals which have been observed on or near the site or are known to be on or near the site:

birds: hawk, heron, eagle, songbirds, other:
mammals: deer, bear, elk, beaver, other:
fish: bass, salmon, trout, herring, shellfish, other: **WDFW PHS data lists priority resident fish presence in East Creek.**

b. List any threatened or endangered species known to be on or near the site.

East Creek is utilized by resident fish according to WDFW Priority Habitat and Species (PHS) data, and Bellevue stream inventory data lists Coho salmon in the lower reaches of East Creek and Cutthroat trout throughout the basin.

c. Is the site part of a migration route? If so, explain.

None known.

d. Proposed measures to preserve or enhance wildlife, if any:

The proposed mitigation plan will enhance wildlife habitat by increasing plant diversity and abundance in the project area.

6. **Energy and natural resources**

a. What kinds of energy (electric, natural gas, oil, wood stove, solar) will be used to meet the completed project's energy needs? Describe whether it will be used for heating, manufacturing, etc.

Not Applicable.

b. Would your project affect the potential use of solar energy by adjacent properties? If so, generally describe.

No.

c. What kinds of energy conservation features are included in the plans of this proposal? List other proposed measures to reduce or control energy impacts, if any:

Not Applicable.

7. **Environmental health**

a. Are there any environmental health hazards, including exposure to toxic chemicals, risk of fire and explosion, spill, or hazardous waste, that could occur as a result of this proposal? If so, describe.

No.

REVIEWED
By Kevin LeClair at 11:02 am, Sep 10, 2008

1) Describe special emergency services that might be required.

None.

2) Proposed measures to reduce or control environmental health hazards, if any:

Not Applicable.

b. **Noise**

1) What types of noise exist in the area which may affect your project (for example: traffic, equipment, operation, other)?

Traffic noise along Richards Road will not affect the project.

2) What types and levels of noise would be created by or associated with the project on a short-term or a long-term basis (for example: traffic, construction, operation, other)? Indicate what hours noise would come from the site.

Noise will be limited to construction equipment during construction and maintenance.

3) Proposed measures to reduce or control noise impacts, if any:

None.

BCC 9.18 - Noise control code will limit work hours to minimize disturbance to neighboring properties.

8. **Land and shoreline use**

a. What is the current use of the site and adjacent properties?

The project site and parcel to the west are auto repair garages. The HD Fowler Company, a waterworks distributor, is located on southern parcel.

b. Has the site been used for agriculture? If so, describe.

No.

c. Describe any structures on the site.

There are two buildings immediately to the north of the project site, ranging from 12 to 18 feet from the stream. The eastern building is associated with the A&M Auto Repair garage, and the western building is associated with the Bellevue Auto Detail garage.

d. Will any structures be demolished? If so, what?

No.

The site is zoned Light Industrial by the City of Bellevue Land Use Code and Comprehensive Plan.

e. What is the current zoning classification of the site?

Based on King County data, this area is zoned C, which is commercial area.

f. What is the current comprehensive plan designation of the site?

Based on a review of Figure S-FA.1 – Factoria Land Use Plan in the City of Bellevue, Washington Comprehensive Plan, the project area is designated as light industrial.

g. If applicable, what is the current shoreline master program designation of the site?

No, East Creek does not meet the cubic foot per second threshold in the project area to be classified as a shoreline of the State.

REVIEWED
By Kevin LeClair at 11:02 am, Sep 10, 2008

h. Has any part of the site been classified as an "environmentally sensitive" area? If so, specify.

Yes, the project area includes East Creek.

i. Approximately how many people would reside or work in the completed project?

None.

j. Approximately how many people would the completed project displace?

None.

k. Proposed measures to avoid or reduce displacement impacts, if any:

None.

l. Proposed measures to ensure the proposal is compatible with existing and projected land uses and plans, if any:

The project will go through the review process by the City of Bellevue.

The project will receive review under the Critical Areas Land Use Permit process with a Critical Areas Report.

9. **Housing**

a. Approximately how many units would be provided, if any? Indicate whether high, middle, or low-income housing.

None.

b. Approximately how many units, if any, would be eliminated? Indicate whether high, middle, or low-income housing.

None.

c. Proposed measures to reduce or control housing impacts, if any:

None.

10. **Aesthetics**

a. What is the tallest height of any proposed structure(s), not including antennas; what is the principal exterior building material(s) proposed?

Not Applicable.

b. What views in the immediate vicinity would be altered or obstructed?

None.

c. Proposed measures to reduce or control aesthetic impacts, if any:

None.

11. **Light and glare**

a. What type of light or glare will the proposal produce? What time of day would it mainly occur?

Not Applicable.

b. Could light or glare from the finished project be a safety hazard or interfere with views?

No.

REVIEWED
By Kevin LeClair at 11:02 am, Sep 10, 2008

c. What existing off-site sources of light or glare may affect your proposal?

None.

d. Proposed measures to reduce or control light and glare impacts, if any:

None.

12. **Recreation**

a. What designated and informal recreational opportunities are in the immediate vicinity?

None.

b. Would the proposed project displace any existing recreational uses? If so, describe.

None.

c. Proposed measures to reduce or control impacts on recreation, including recreation opportunities to be provided by the project or applicant, if any:

None.

13. **Historic and cultural preservation**

a. Are there any places or objects listed on, or proposed for, national, state, or local preservation registers known to be on or next to the site? If so, generally describe.

None known.

b. Generally describe any landmarks or evidence of historic, archaeological, scientific, or cultural importance known to be on or next to the site.

None known.

c. Proposed measures to reduce or control impacts, if any:

None.

14. **Transportation**

a. Identify public streets and highways serving the site, and describe proposed access to the existing street system. Show on site plans, if any.

SE 30th Street will be used to access the project site. This is via the HD Fowler property.

b. Is site currently served by public transit? If not, what is the approximate distance to the nearest transit stop?

Not Applicable.

c. How many parking spaces would the completed project have? How many would the project eliminate?

Not Applicable.

d. Will the proposal require any new roads or streets, or improvements to existing roads or streets, not including driveways? If so, generally describe (indicate whether public or private).

No.

REVIEWED
By Kevin LeClair at 11:02 am, Sep 10, 2008

e. Will the project use (or occur in the immediate vicinity of) water, rail, or air transportation? If so, generally describe.

No.

f. How many vehicular trips per day would be generated by the completed project? If known, indicate when peak volumes would occur.

None.

g. Proposed measures to reduce or control transportation impacts, if any:

None.

15. **Public services**

a. Would the project result in an increased need for public services (for example: fire protection, police protection, health care, schools, other)? If so, generally describe.

No.

b. Proposed measures to reduce or control direct impacts on public services, if any.

None.

16. **Utilities**

a. Circle utilities currently available at the site: electricity, natural gas, water, refuse service, telephone, sanitary sewer, septic system, other.

None.

b. Describe the utilities that are proposed for the project, the utility providing the service, and the general construction activities on the site or in the immediate vicinity which might be needed.

None.

C. SIGNATURE

The above answers are true and complete to the best of my knowledge. I understand that the lead agency is relying on them to make its decision.

Signature: ..... for PW Properties 8/21/08 .....

Date Submitted: .....

Reviewed by Kevin LeClair, Senior Land Use Planner, City of Bellevue on September 10, 2008

TO BE COMPLETED BY APPLICANT

EVALUATION FOR
AGENCY USE ONLY

D. SUPPLEMENTAL SHEET FOR NONPROJECT ACTIONS

(do not use this sheet for project actions)

Because these questions are very general, it may be helpful to read them in conjunction with the list of the elements of the environment.

When answering these questions, be aware of the extent the proposal, or the types of activities likely to result from the proposal, would affect the item at a greater intensity or at a faster rate than if the proposal were not implemented. Respond briefly and in general terms.

1. How would the proposal be likely to increase discharge to water; emissions to air; production, storage, or release of toxic or hazardous substances; or production of noise?

   Not Applicable.

   Proposed measures to avoid or reduce such increases are:

   None.

2. How would the proposal be likely to affect plants, animals, fish, or marine life?

   The proposed project would improve riparian habitat quality.

   Proposed measures to protect or conserve plants, animals, fish, or marine life are:

   Implement measures in the critical areas report and mitigation plan.

3. How would the proposal be likely to deplete energy or natural resources?

   Not Applicable.

   Proposed measures to protect or conserve energy and natural resources are:

   None.

4. How would the proposal be likely to use or affect environmentally sensitive areas or areas designated (or eligible or under study) for governmental protection; such as parks, wilderness, wild and scenic rivers, threatened or endangered species habitat, historic or cultural sites, wetlands, floodplains, or prime farmlands?

   Refer to the Critical Areas Report and Biological Assessment.

   Proposed measures to protect such resources or to avoid or reduce impacts are:

   Refer to the Critical Areas Report and Biological Assessment.

5. How would the proposal be likely to affect land and shoreline use, including whether it would allow or encourage land or shoreline uses incompatible with existing plans?

   Not Applicable.

   Proposed measures to avoid or reduce shoreline and land use impacts are:

   Not Applicable.

6. How would the proposal be likely to increase demands on transportation or public services and utilities?

   Not Applicable.

Proposed measures to reduce or respond to such demand(s) are:

None.

7. Identify, if possible, whether the proposal may conflict with local, state, or federal laws or requirements for the protection of the environment.

The project is currently being reviewed by federal, state, and local jurisdictions as part of the permit approval process.

East Creek Rehabilitation
Bellevue File # 08-129544-LO
13451 SE 27th Place

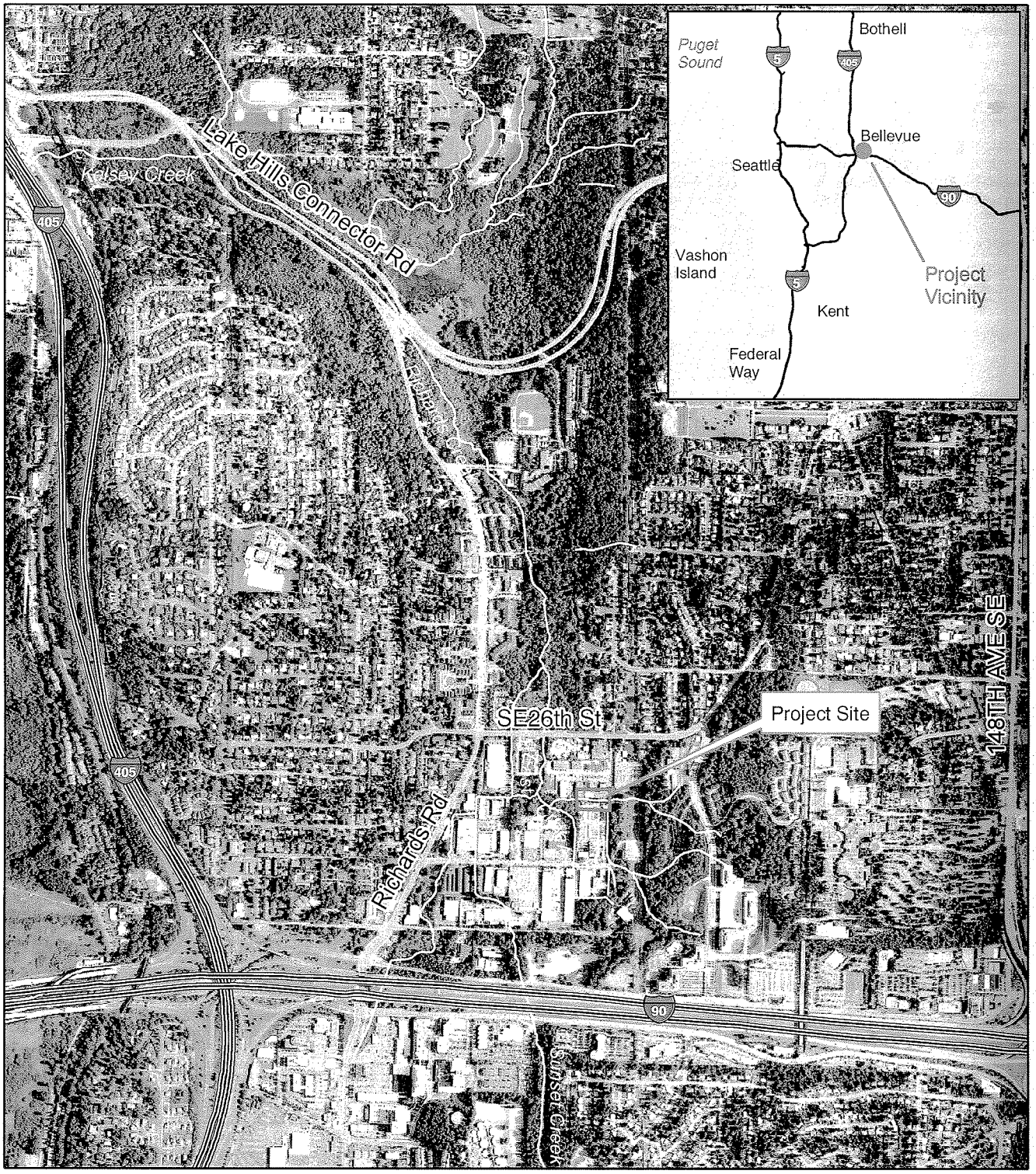

0 0.25 0.5 Miles

Project Boundary
Road
Stream
Freeway

N

A&M Auto East Creek Rehabilitation

Vicinity Map

AMIN0000-0001

Figure 1

DAVID EVANS AND ASSOCIATES INC.

East Creek Rehabilitation
Bellevue File # 08-129544-LO
13451 SE 27th Place

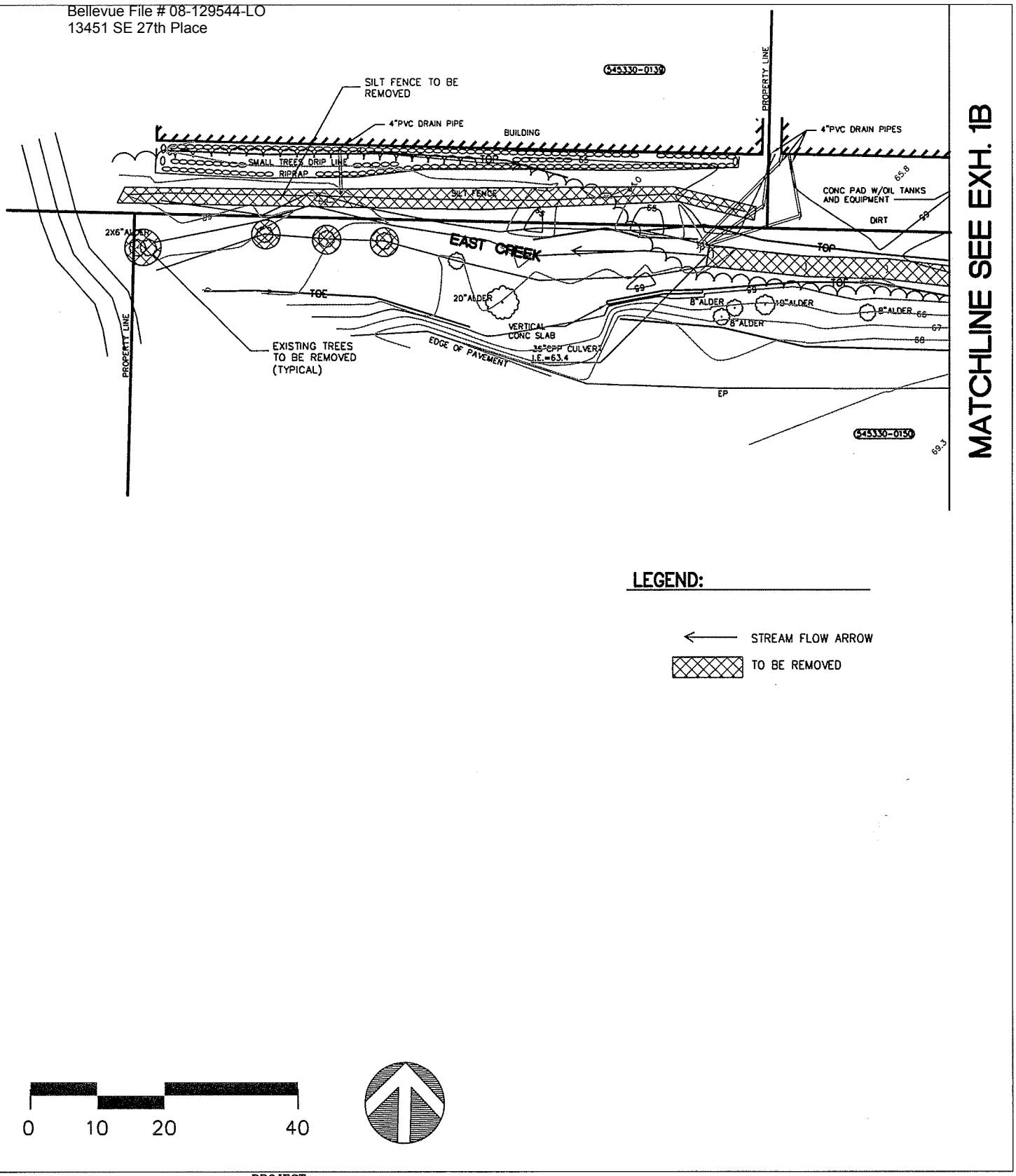

PROJECT
EAST CREEK STREAM REHABILITATION

TITLE
JARPA EXHIBIT - EAST CREEK BASIN

EXISTING SITE CONDITIONS

SHEET
EXH. 1A

DAVID EVANS AND ASSOCIATES INC.
415 - 118th Avenue SE
Bellevue Washington 98005-3518
Phone: 425.519.6500

COUNTY	PROJECT	SCALE	DATUM
KING	AMIN0000-0001	AS NOTED	NAVD 88
DRAWN BY	DESIGN BY	APPROVED BY	DATE
GBK	JCGA	JASH	8-18-08

East Creek Rehabilitation
Bellevue File # 08-129544-LO
13451 SE 27th Place

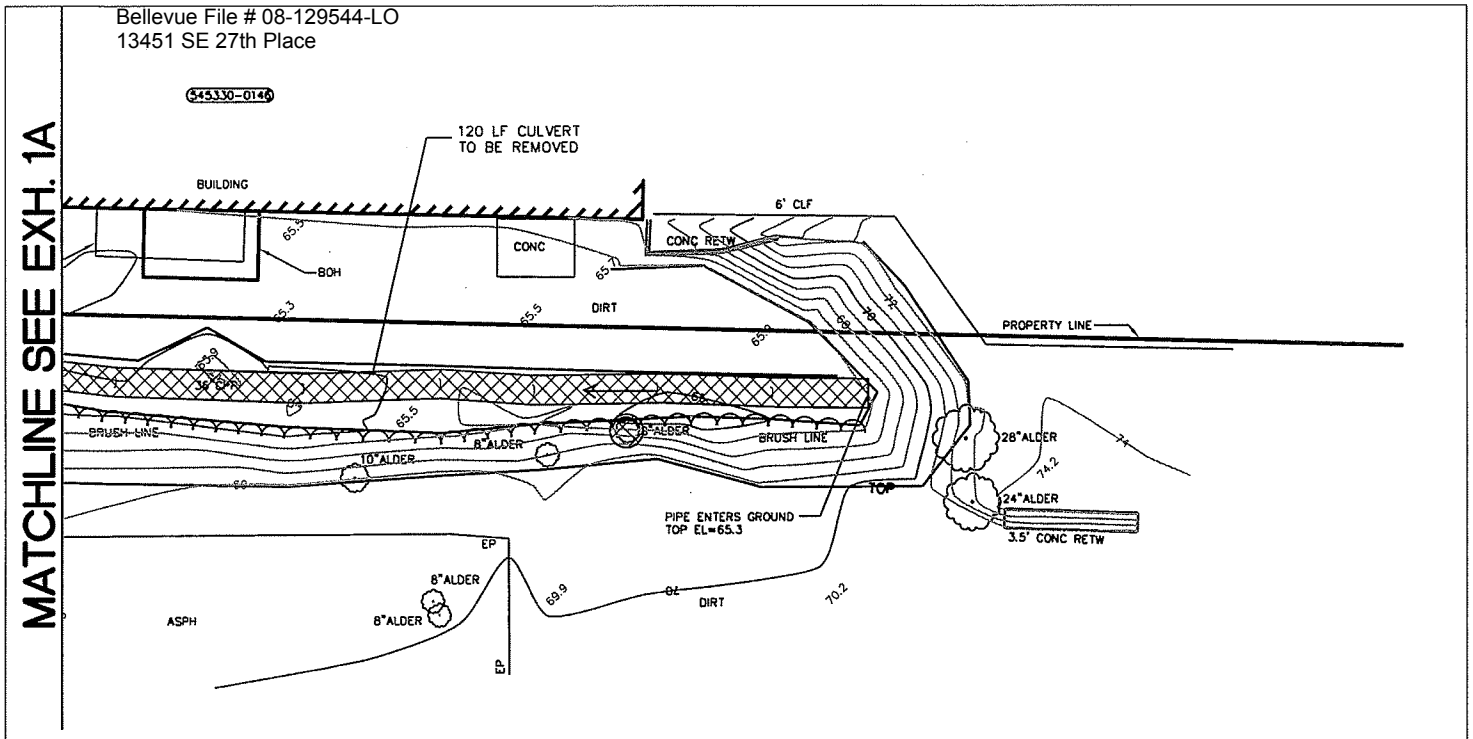

LEGEND:

STREAM FLOW ARROW

TO BE REMOVED

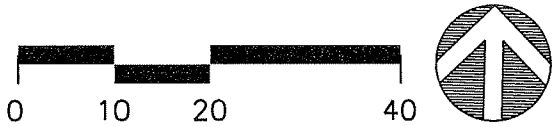

DAVID EVANS AND ASSOCIATES INC.
415 - 118th Avenue SE
Bellevue Washington 98005-3518
Phone: 425.519.6500

PROJECT: EAST CREEK STREAM REHABILITATION

TITLE: JARPA EXHIBIT - EAST CREEK BASIN

EXISTING SITE CONDTIONS

SHEET: EXH. 1B

COUNTY	PROJECT	SCALE	DATUM
KING	AMIN0000-0001	AS NOTED	NAVD 88
DRAWN BY	DESIGN BY	APPROVED BY	DATE
GBK	JCGA	JASH	8-18-08

East Creek Rehabilitation
Bellevue File # 08-129544-LO
13451 SE 27th Place

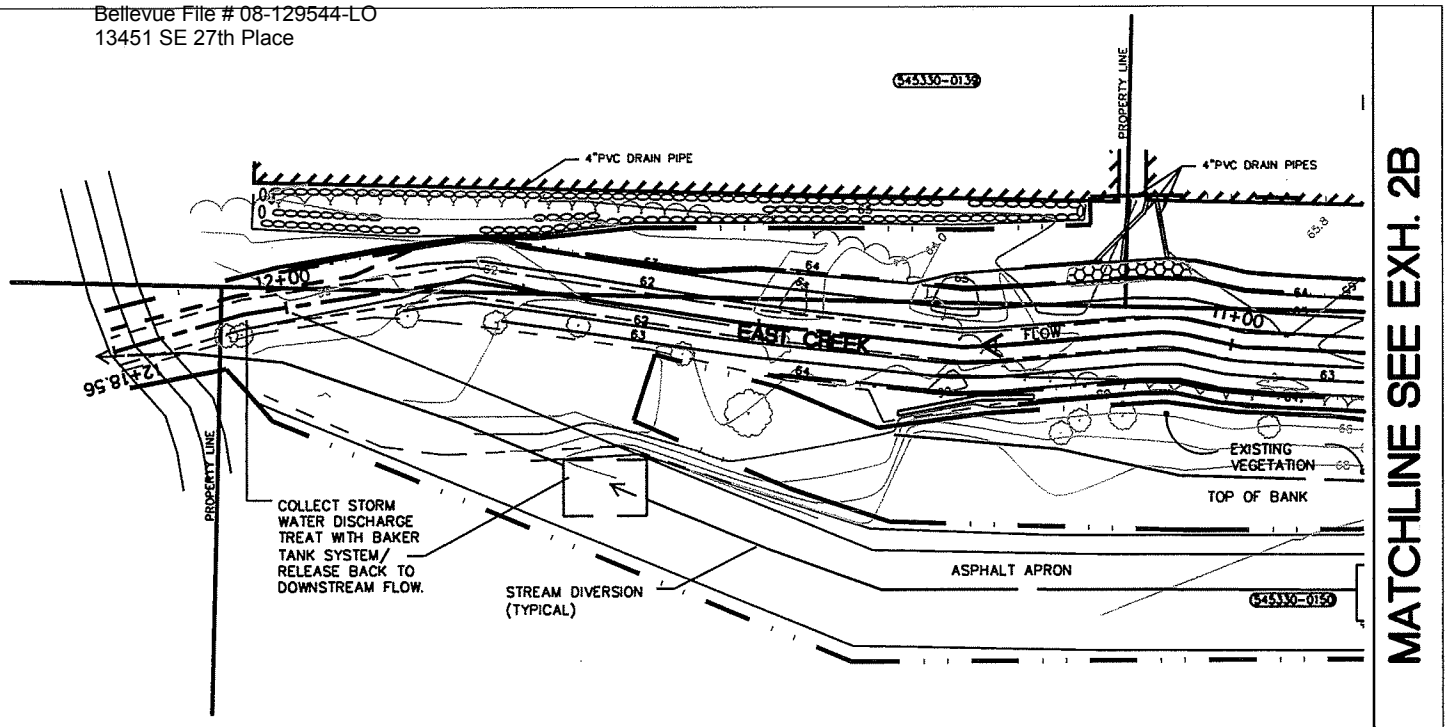

0 10 20 40

LEGEND:

- STREAM FLOW ARROW
- LIMIT OF WORK/ HIGH VISIBILITY FENCE
- STRAW WATTLES
- TOP OF SLOPE
- TOE OF SLOPE
- ORDINARY HIGH WATER MARK
- STREAM CENTER LINE
- 64 PROPOSED CONTOUR
- EXISTING CONTOUR
- 8" QUARRY SPALL ARMOUR

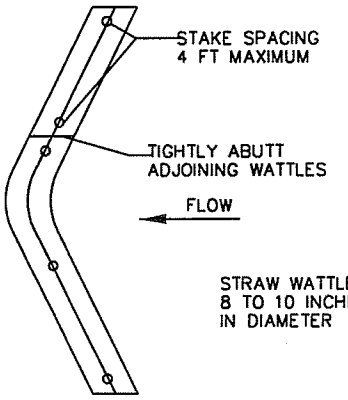

PLAN VIEW

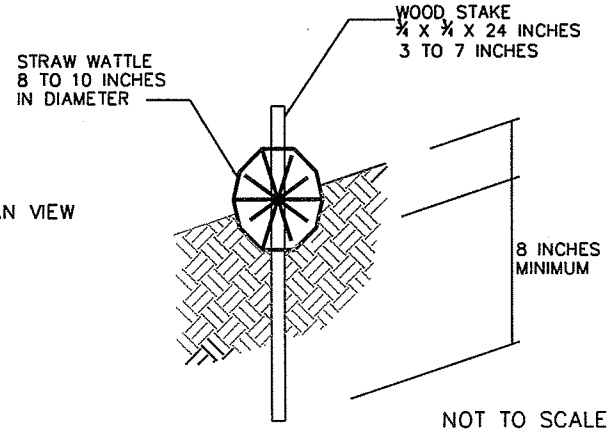

NOT TO SCALE

SECTION

SIEVE	MASS RETAINED	CUM MASS RETAINED	IND% RETAINED	% RETAINED	% PASSING
4" (100mm)	0.0	0.0	0.0	0.0	100
3" (75mm)	1.9	1.9	7.2	7.2	92
2" (50mm)	11.3	13.2	42.6	49.8	50
1 1/2" (37.5mm)	6.3	19.5	23.6	73.4	27
1" (25mm)	6.9	26.4	26.0	99.4	0-1
#200 (75um)	0.0	26.4	0.00	99.43	0-1

STREAM CHANNEL GRAVEL GRADIENT CHART

STRAW WATTLE INSERT

DAVID EVANS AND ASSOCIATES INC.
415 - 118th Avenue SE
Bellevue Washington 98005-3518
Phone: 425.519.6500

PROJECT: EAST CREEK STREAM REHABILITATION

TITLE: JARPA EXHIBIT - EAST CREEK BASIN

GRADING PLAN

SHEET: EXH. 2A

COUNTY	PROJECT	SCALE	DATUM
KING	AMIN0000-0001	AS NOTED	NAVD 88
DRAWN BY	DESIGN BY	APPROVED BY	DATE
GBK	JCGA	JASH	8-18-08

East Creek Rehabilitation
Bellevue File # 08-129544-LO
13451 SE 27th Place

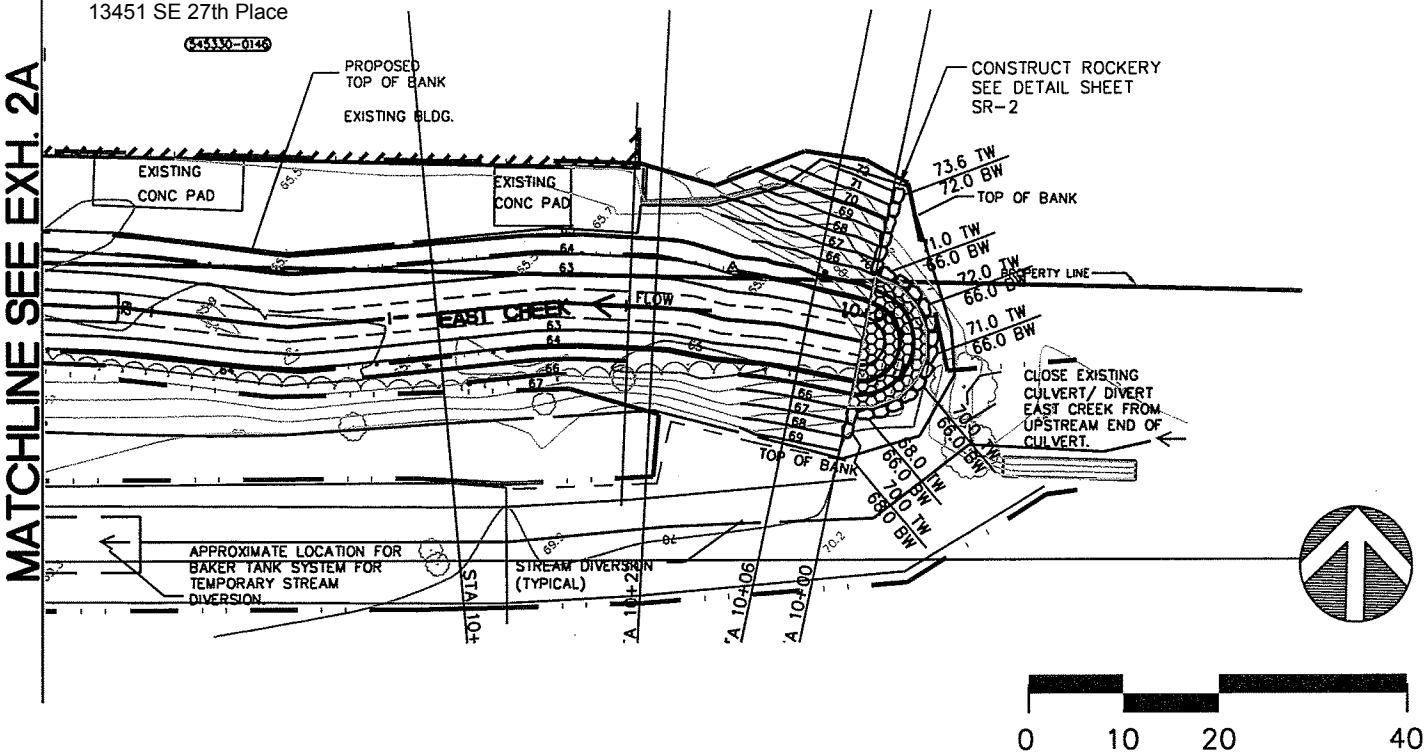

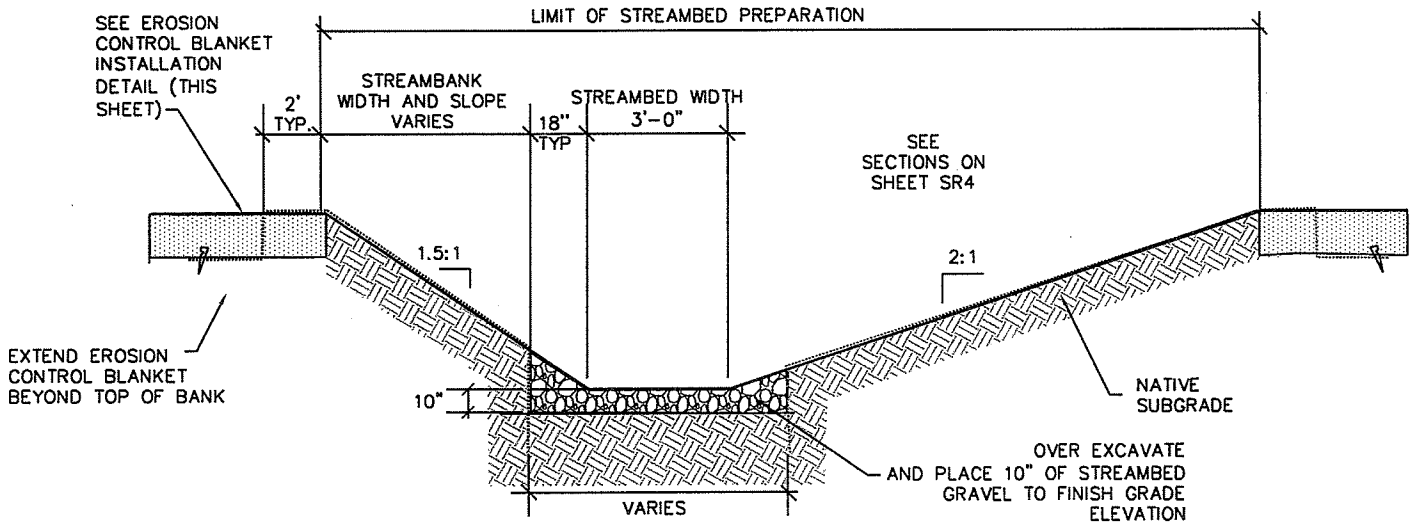

CROSS SECTION

TYPICAL STREAM CHANNEL CONSTRUCTION

NOT TO SCALE

DAVID EVANS AND ASSOCIATES INC.
415 - 118th Avenue SE
Bellevue Washington 98005-3518
Phone: 425.519.6500

PROJECT: EAST CREEK STREAM REHABILITATION

TITLE: JARPA EXHIBIT - EAST CREEK BASIN

GRADING PLAN

SHEET: EXH. 2B

COUNTY	PROJECT	SCALE	DATUM
KING	AMIN0000-0001	AS NOTED	NAVD 88
DRAWN BY	DESIGN BY	APPROVED BY	DATE
GBK	JCGA	JASH	8-18-08

LEGEND:

1. 2"-4" QUARRY SPALLS ROCK FILTER LAYER
2. GRAVEL BACKFILL FOR DRAINS, 12"MIN THICKNESS.
3. PERFORATED OR SLOTTED DRAIN PIPE, 4" MIN., BEDDED WITHIN 2" TO 4" QUARRY SPALLS AS DESCRIBED ABOVE. TIGHTLINE TO STORM DRAIN SYSTEM OR DAYLIGHT.
4. UNDISTURBED FIRM NATIVE SOILS OR COMPACTED STRUCTURAL FILL.

(3) DESIGNATES SIZE OF ROCK REQUIRED PER GEOTECHNICAL ENGINEER'S RECOMMENDATIONS.

NOTES:

1. GRAVEL BACKFILL SHALL MEET WSDOT/APWA STANDARD SPECIFICATION 9-03.12(4)
2. FLATTER SLOPE MAY BE REQUIRED IN LESS STABLE SOIL.

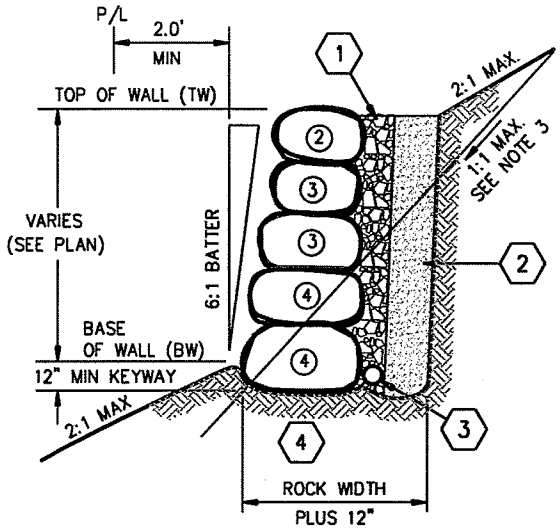

CUT SECTION

SIZE	APPROX. WT - LBS	APPROX. DIA.
1 MAN	50 - 200	12" - 18"
2 MAN	200 - 700	18" - 28"
3 MAN	700 - 2000	28" - 36"
4 MAN	2000 - 4000	36" - 48"
5 MAN	4000 - 6000	48" - 54"
6 MAN	6000 - 8000	54" - 60"

ROCKERY DETAIL

NOT TO SCALE

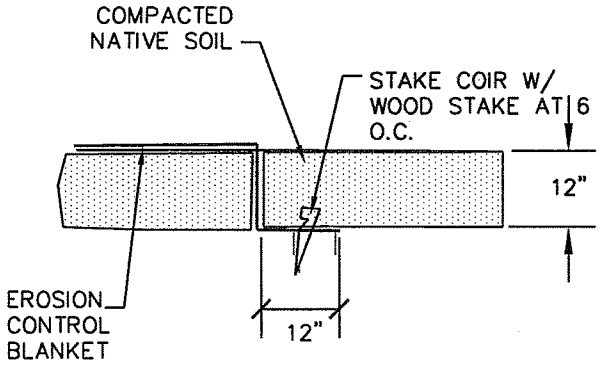

EROSION CONTROL BLANKET INSTALLATION

NOT TO SCALE

DAVID EVANS
AND ASSOCIATES INC.
415 - 118th Avenue SE
Bellevue Washington 98005-3518
Phone: 425.519.6500

PROJECT: EAST CREEK STREAM REHABILITATION

TITLE: JARPA EXHIBIT - EAST CREEK BASIN

GRADING DETAILS

SHEET: EXH. 2C

COUNTY	PROJECT	SCALE	DATUM
KING	AMIN0000-0001	AS NOTED	NAVD 88
DRAWN BY	DESIGN BY	APPROVED BY	DATE
GBK	JCGA	JASH	8-18-08

TEMPORARY EROSION AND SEDIMENT CONTROL NOTES:

Prior to any grading in the stream rehabilitation area temporary erosion and sediment controls shall be installed as shown on the Grading Plan. Straw wattles are intended to allow for construction while keeping sediment out of existing sensitive areas. Straw wattles shall remain in place throughout all construction phases. Wattles shall not be removed without authorization by the Landscape Architect/ Wetland Biologist.

EARTHWORK NOTES:

Grading activities shall occur in conformance with the required fish window, approximately July 1, through August 31st. All work shall be scheduled by the contractor during low flow conditions. All work shall be done in the dry.

Contractor shall give the stream construction monitor a maximum of 5 working days notice prior to construction.

No construction work shall commence until there is a pre-construction meeting between the client, the stream construction monitor, and participating contractor to review the rehabilitation plan.

Construction must be performed in accordance with codes, permit conditions, and other applicable ordinances and policies.

Prior to any construction, a licensed surveyor shall survey, stake and flag limits of work/grading based on the boundaries shown on the grading plan. The stream construction monitor shall approve flagging of limit of work limits prior to construction. Contractor shall be responsible for verifying actual locations of existing vegetation to be saved. Contractor shall be responsible for restoring any disturbance to existing vegetation located outside the limits of work.

Contractor shall not stockpile excavated soils in any sensitive area. All excavated soils shall be exported off site. Stream rehabilitation grading subject to field verification by construction monitor to ensure design conformance.

Contractor shall provide a temporary stream diversion and dewatering with a Baker Tank system or approved equivalent. Contractor shall also provide treatment for storm water discharge with a Baker Tank system or approved equivalent. Contractor shall submit stream diversion/dewatering plan to Engineer for approval.

Erosion control blankets shall be placed along the stream channel in areas shown in the plans.

Stream bed gravels shall be clean, naturally occurring gravel material that meet gradient requirements as shown in stream bed gravel table. (See this sheet).

All exposed soils and erosion control blankets will be hydroseeded with seed mix as shown in the plant schedule (Sheet SR-4).

DAVID EVANS AND ASSOCIATES INC.
415 - 118th Avenue SE
Bellevue Washington 98005-3518
Phone: 425.519.6500

PROJECT			SHEET
EAST CREEK STREAM REHABILITATION			
TITLE: JARPA EXHIBIT - EAST CREEK BASIN			
GRADING PLAN NOTES			
COUNTY: KING	PROJECT: AMIN0000-0001	SCALE: AS NOTED	DATUM: NAVD 88'
DRAWN BY: GBK	DESIGN BY: JCGA	APPROVED BY: JASH	DATE: 8-18-08

EXH. 2D

East Creek Rehabilitation
Bellevue File # 08-129544-LO
13451 SE 27th Place

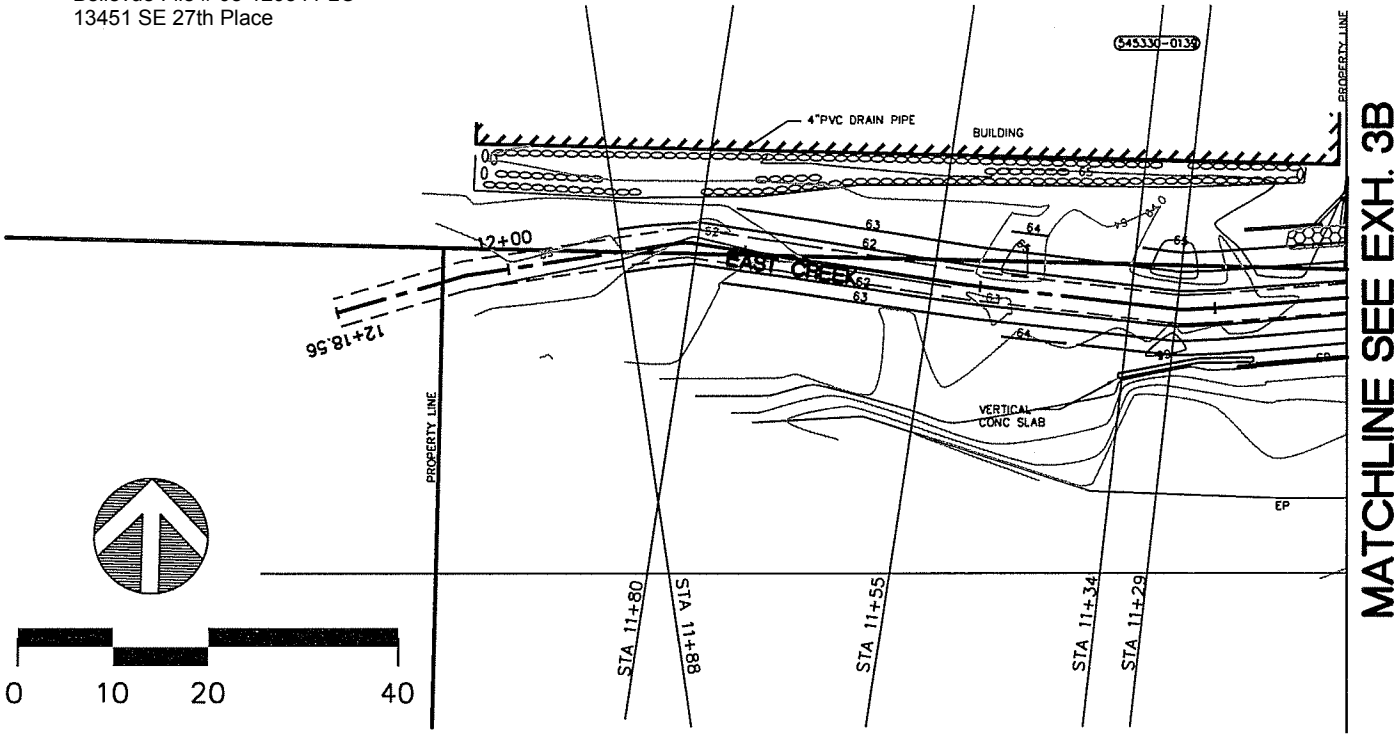

STREAM CHANNEL PLAN VIEW

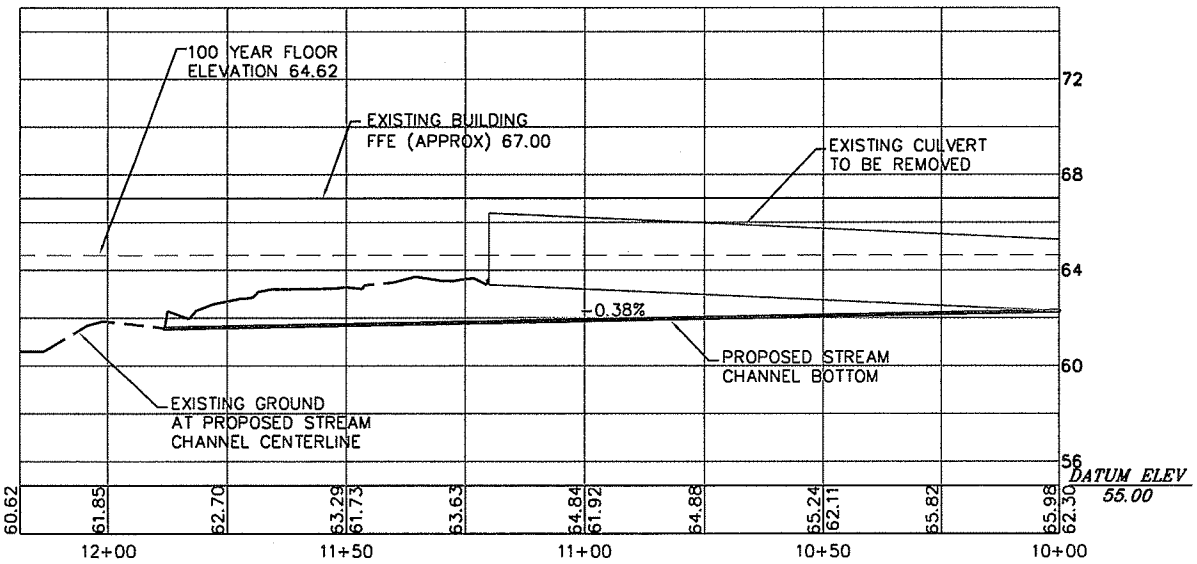

STREAM CHANNEL PROFILE

SCALE: VERT = 1"=8'
HORIZ = 1"=40'

PROJECT

EAST CREEK STREAM REHABILITATION

TITLE

JARPA EXHIBIT - EAST CREEK BASIN

PROFILE AND CROSSECTION - PLAN VIEW/ PROFILE

SHEET

DAVID EVANS AND ASSOCIATES INC.
415 - 118th Avenue SE
Bellevue Washington 98005-3518
Phone: 425.519.6500

COUNTY	PROJECT	SCALE	DATUM
KING	AMIN0000-0001	AS NOTED	NAVD 88
DRAWN BY	DESIGN BY	APPROVED BY	DATE
GBK	JCGA	JASH	8-18-08

EXH. 3A

East Creek Rehabilitation
Bellevue File # 08-129544-LO
13451 SE 27th Place

MATCHLINE SEE EXH. 3A

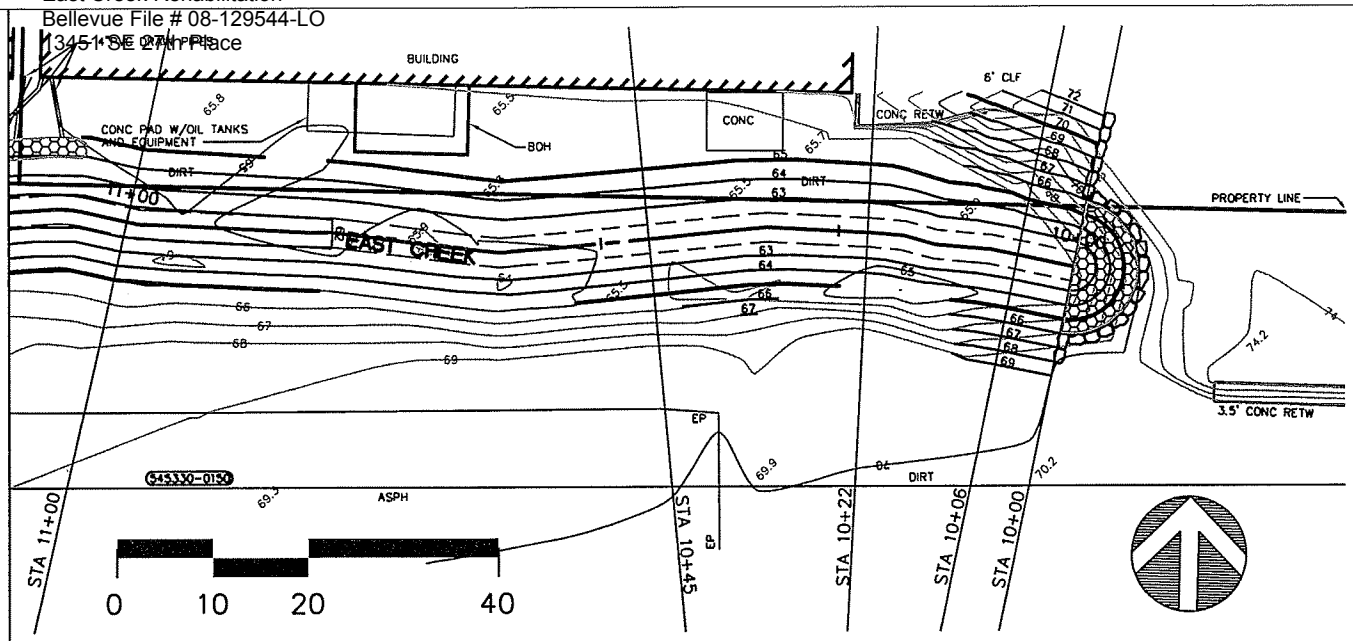

STREAM CHANNEL PLAN VIEW

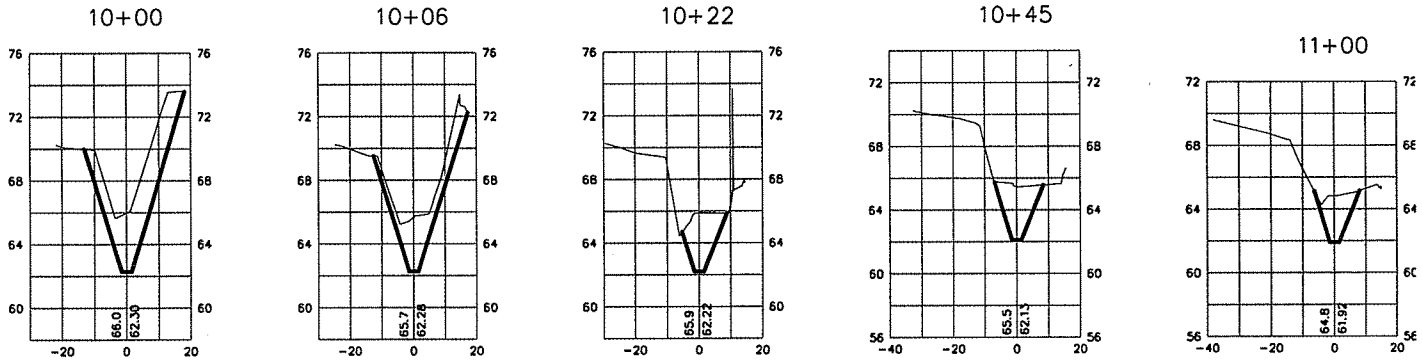

STREAM CHANNEL CROSS SECTIONS

SCALE: VERT = 1"=12'
HORIZ = 1"=60'

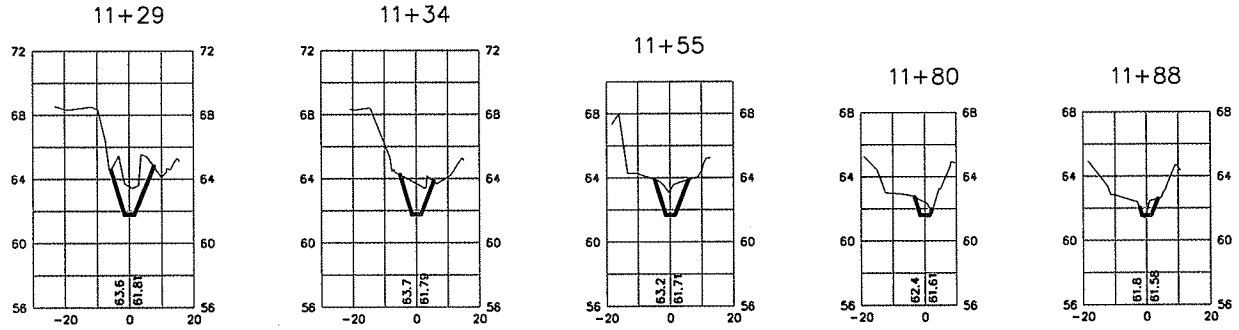

DAVID EVANS AND ASSOCIATES INC.
415 - 118th Avenue SE
Bellevue Washington 98005-3518
Phone: 425.519.6500

PROJECT: EAST CREEK STREAM REHABILITATION

TITLE: JARPA EXHIBIT - EAST CREEK BASIN

PROFILE AND CROSS SECTION

SHEET: EXH. 3B

COUNTY	PROJECT	SCALE	DATUM
KING	AMIN0000-0001	AS NOTED	NAVD 88
DRAWN BY	DESIGN BY	APPROVED BY	DATE
GBK	JCGA	JASH	8-18-08

East Creek Rehabilitation
Bellevue File # 08-129544-LO
13451 SE 27th Place

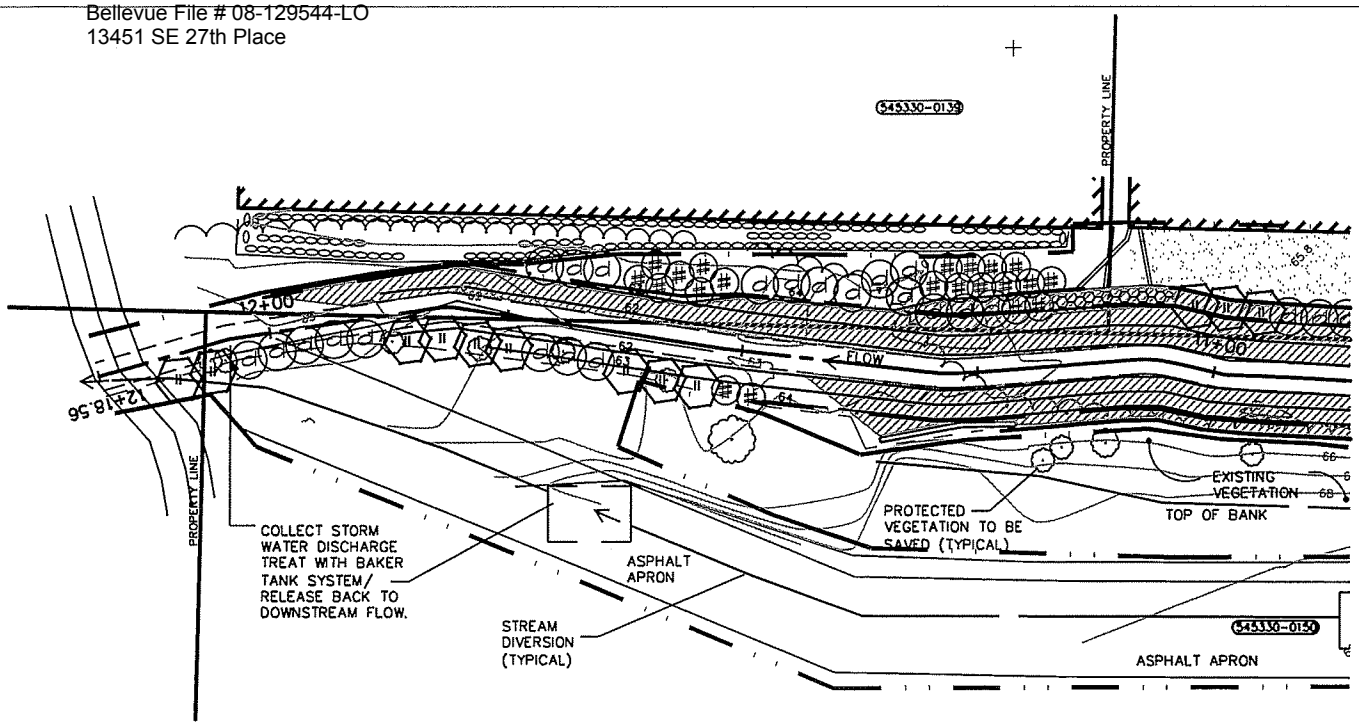

LEGEND:

- STREAM FLOW ARROW
- LIMIT OF WORK/ HIGH VISIBILITY FENCE
- STRAW WATTLES
- TOP OF SLOPE
- TOE OF SLOPE
- ORDINARY HIGH WATER MARK
- STREAM CENTER LINE
- PROPOSED CONTOUR
- EXISTING CONTOUR
- 8' QUARRY SPALL ARMOUR
- HYDROSEED MIX/COIR EROSION CONTROL FABRIC
- ¾" MINUS CLEAN GRAVEL

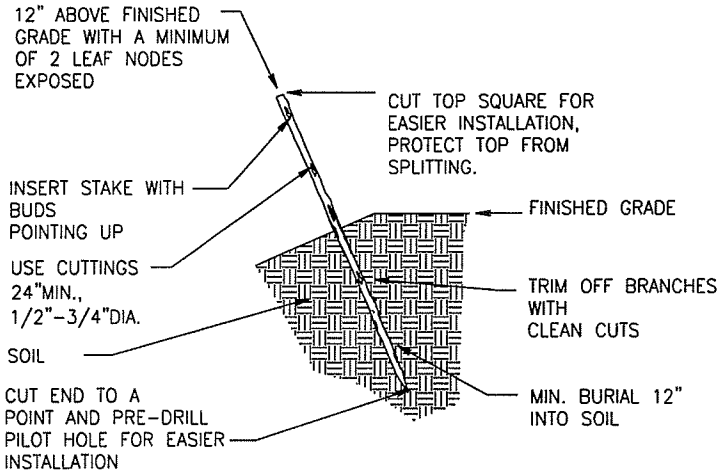

LIVE STAKE PLANTING

NOT TO SCALE

0 10 20 40

DAVID EVANS AND ASSOCIATES INC.
415 - 118th Avenue SE
Bellevue Washington 98005-3518
Phone: 425.519.6500

PROJECT: EAST CREEK STREAM REHABILITATION

TITLE: JARPA EXHIBIT - EAST CREEK BASIN

LANDSCAPE PLAN - DETAIL

SHEET: EXH. 4A

COUNTY	PROJECT	SCALE	DATUM
KING	AMIN0000-0001	AS NOTED	NAVD 88
DRAWN BY	**DESIGN BY**	**APPROVED BY**	**DATE**
GBK	JCGA	JASH	8-18-08

East Creek Rehabilitation
Bellevue File # 08-129544-LO
13451 SE 27th Place

MATCHLINE SEE EXH. 4A

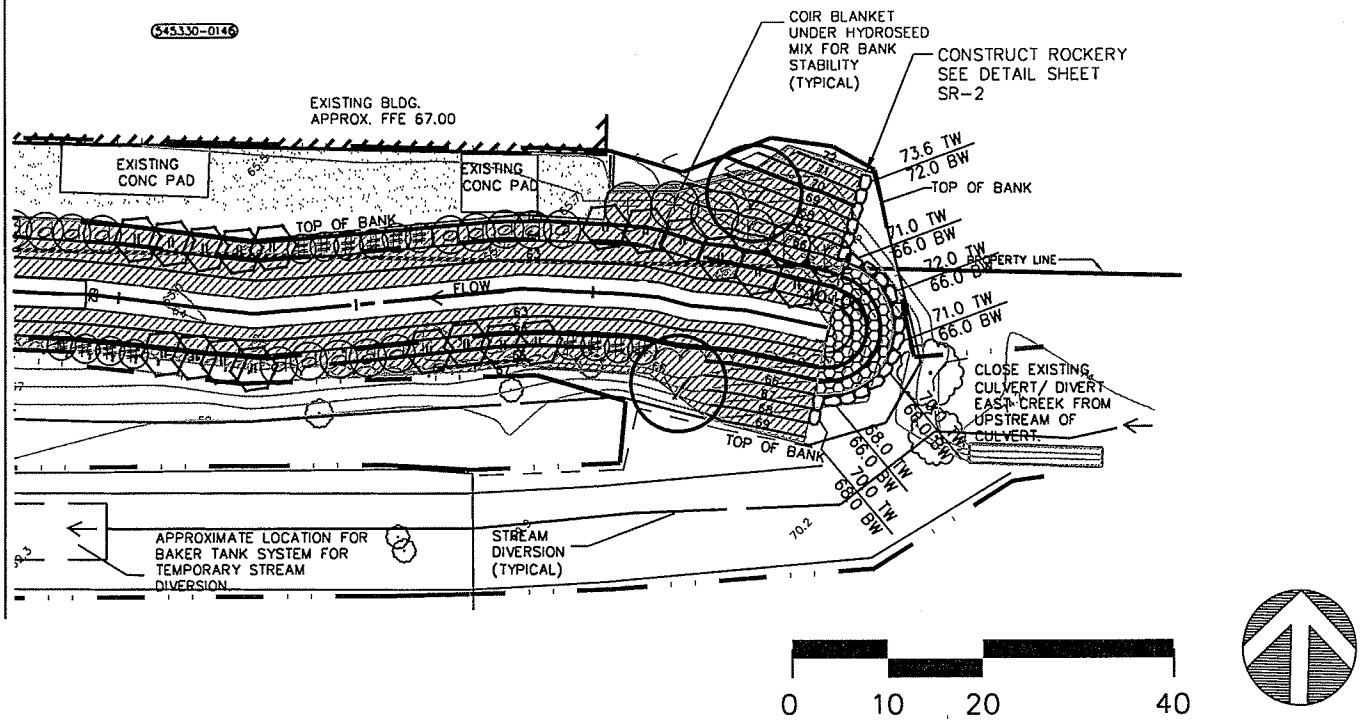

PLANT SCHEDULE

BOTANICAL NAME	COMMON NAME	QUANTITY	CONDITION	SIZE (HT)	REMARKS
TREES					
SALIX LASIANDRA	PACIFIC WILLOW	496	STAKES	36"	24" O.C.

NOTE: EACH WILLOW SYMBOL IS EQUAL TO 16 STAKES.

SHRUBS/GROUNDCOVERS					
CORNUS SERICEA	RED OSIER DOGWOOD	37	2 GAL.	3' MIN. HT.	4' O.C.
LONICERA INVOLUCRATA	BLACK TWINBERRY	35	2 GAL.	3' MIN. HT.	4' O.C.
ACER CIRCINATUM	VINE MAPLE	2	2 GAL.	3' MIN. HT.	4' O.C.
ROSA NUTKANA	NOOTKA ROSE	3	2 GAL.	3' MIN. HT.	4' O.C.
SYMPHORICARPOS ALBUS	SNOWBERRY	3	2 GAL.	3' MIN. HT.	4' O.C.

HYDROSEED MIX

KIND/VARIETY	% BY WEIGHT	MIN. % GERM
RICE CUTGRASS	45%	90%
WESTERN MANA GRASS	40%	90%
CANADA REED	10%	90%
SPIKE BENTGRASS	3%	90%
WOOL-GRASS	2%	90%

APPLICATION RATE: 120 LBS/ACRE
WOOD CELLULOSE FIBER MULCH: 2,000 LBS/ACRE
14N-14P-14K FERTILIZER: 255 LBS/ACRE
GUAR TACKIFIER: 40 LBS/ACRE

DAVID EVANS AND ASSOCIATES INC.
415 - 118th Avenue SE
Bellevue Washington 98005-3518
Phone: 425.519.6500

PROJECT: EAST CREEK STREAM REHABILITATION

TITLE: JARPA EXHIBIT - EAST CREEK BASIN

LANDSCAPE PLAN - PLANT SCHEDULE

SHEET: EXH. 4B

COUNTY	PROJECT	SCALE	DATUM
KING	AMIN0000-0001	AS NOTED	NAVD 88
DRAWN BY	**DESIGN BY**	**APPROVED BY**	**DATE**
GBK	JCGA	JASH	8-18-08

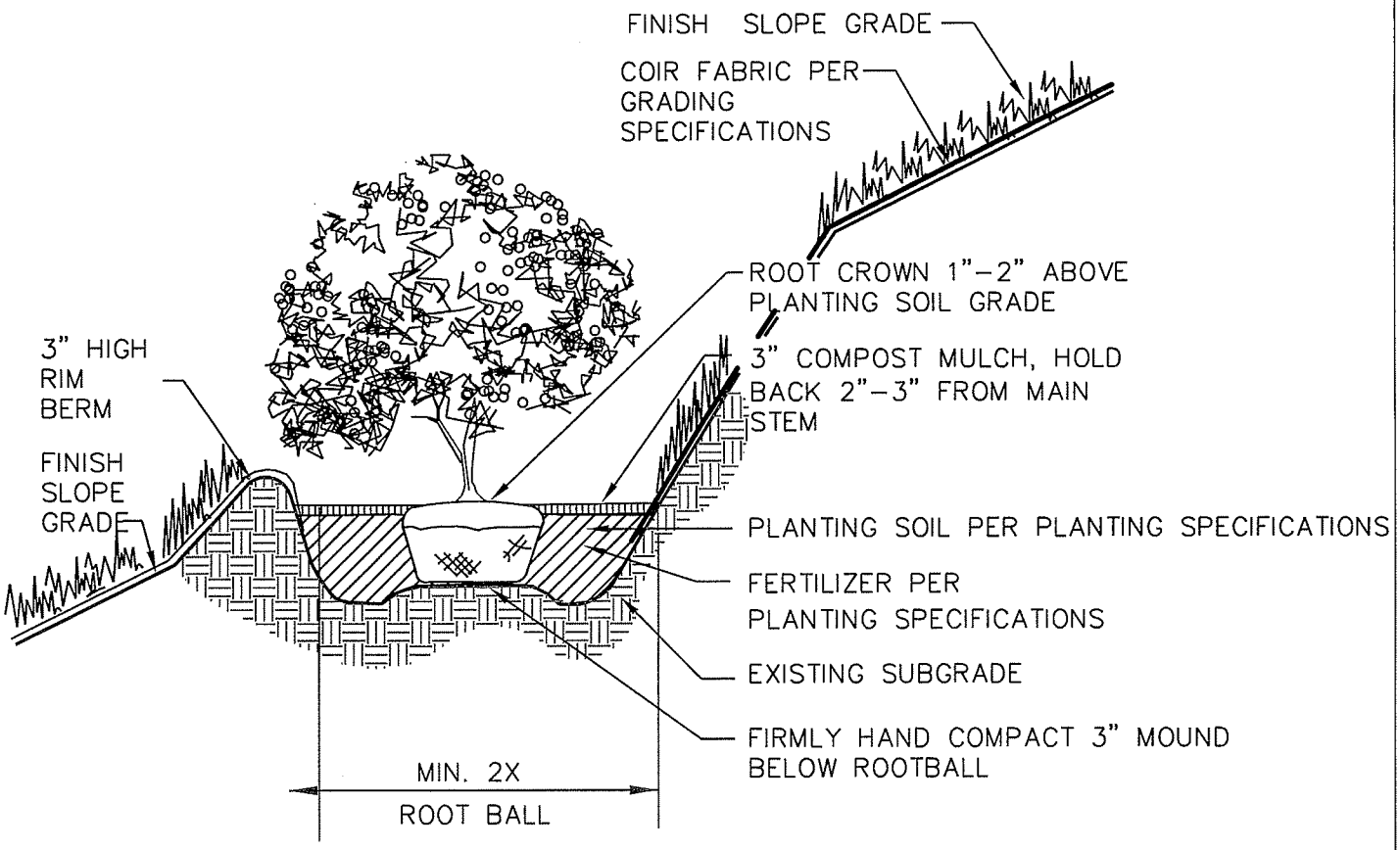

EVERGREEN/ DECIDUOUS SHRUB PLANTING (ON SLOPES)

NOT TO SCALE

DAVID EVANS AND ASSOCIATES INC.
415 - 118th Avenue SE
Bellevue Washington 98005-3518
Phone: 425.519.6500

PROJECT: EAST CREEK STREAM REHABILITATION

TITLE: JARPA EXHIBIT - EAST CREEK BASIN

LANDSCAPE PLAN - DETAIL

SHEET: EXH. 4C

COUNTY	PROJECT	SCALE	DATUM
KING	AMIN0000-0001	AS NOTED	NAVD 88
DRAWN BY	DESIGN BY	APPROVED BY	DATE
GBK	JCGA	JASH	8-18-08

jash 08/18/08 9:48am J:\AMIN0000\AMIN0000\AMIN0000-01\Amin_Jash.dwg

LANDSCAPE NOTES:

All plant material, planting techniques and seeding activities shall conform to typical landscape industry standards. Plants shall be native to the Pacific Northwest and grown in the Puget Sound lowland.

All nursery grown plants shall be containerized, ball and burlap or bare root stock in conformance with ANSI Z60.1–2004. Provide only sound, healthy vigorous plants, free of defects, diseases and all forms of infestation.

The Landscape Architect/Stream Biologist will inspect plant materials to verify conformance to the plant schedule and to plant characteristics. The Landscape Architect/Stream Biologist reserves the right to require replacement or substitution of plants that are deemed unsuitable. The Landscape Architect/Stream Biologist will verify plant layout prior to installation.

Dig, pack, transport and handle all plants with care to ensure protection from injury. Store plants in the manner necessary to accommodate their horticultural requirements. Heel–in plants if necessary to keep them from drying out.

The contractor shall verify that conditions are suitable for plant installation. Any conditions detrimental to plant growth (e.g. standing water, obstructions, rubble) shall be resolved prior to plant installation or resume when conditions allow. Beginning of work constitutes acceptance of conditions as satisfactory.

Excavate circular plant pits a minimum of 2 times the root ball size with vertical sides and install plants as shown on the planting detail. Backfill plant pits with planting soil.

Planting soil shall be topsoil (Cedar Grove two way mix or approved equal) in all stream channel planting areas.

Prior to backfilling of plant pits, place mychorrhizae inoculant (Bio–Organics Endomyhcorrhizal Inoculant, or approved equivalent) around root ball in accordance with manufacturer's written instructions.

Add hydrated Soil Moist or approved equivalent, to the planting soil backfill of all plants installed in areas that won't flood. Follow manufacturer's specifications for directions for use and application rates.

Following installation of all planting materials, all bases shall receive three (3) inches of compost mulch in an area equal to 2x rootball diameter.

Contractor shall warranty all plants and materials for a period of one year from final acceptance.

Stream rehabilitation area shall be irrigated either by hand, (water truck) or temporary on grade irrigation system designed by Contractor. The Contractor shall provide water sources for and electricity. The Contractor shall provide isolation valve and connection to water meter, back flow prevention and controller.

The irrigation system shall be set by Contractor to allow for 1.0 inch of precipitation per week (whenever natural rainfall is insufficient) between May 15 and October 31st. Irrigation is required within all planting areas for at least one growing season following planting to ensure adequate plant establishment.

It is the Contractors responsibility to maintain the irrigation system during the duration of the warranty period. At the end of the one year warranty period, the Contractor will disassemble and remove the irrigation system from the planting areas.

DAVID EVANS AND ASSOCIATES INC.
415 - 118th Avenue SE
Bellevue Washington 98005-3518
Phone: 425.519.6500

PROJECT: EAST CREEK STREAM REHABILITATION

TITLE: JARPA EXHIBIT - EAST CREEK BASIN

LANDSCAPE NOTES

SHEET: EXH. 4D

COUNTY	PROJECT	SCALE	DATUM
KING	AMIN0000–0001	AS NOTED	NAVD 88
DRAWN BY	DESIGN BY	APPROVED BY	DATE
GBK	JCGA	JASH	8–18–08

gbk 08/18/08 9:42am J:\AMIN0000\0001\dwg\AMIN_JARPA.dwg

1.0 MITIGATION PLAN OVERVIEW

The project is called the East Creek Rehabilitation Project, and is located in the City of Bellevue, Washington. East Creek rehabilitation will occur by removing an existing culvert, regrading 219 lineal feet of stream channel, 1,201 square feet of riparian buffer enhancement and installing erosion and sediment control measures. Regraded areas total 3,110 square feet of which 1,908 square feet are below the ordinary high water mark.

2.0 MITIGATION GOALS AND OBJECTIVES

The rehabilitation plan has the following goals:

1. Daylighting 120 lineal feet of culverted stream; 2) regrading the stream channel to achieve a positive flow and remain within its banks during a hundred year storm period; 3) replant the riparian buffer with native trees and shrubs for habitat diversity.

3.0 PERFORMANCE STANDARDS

A specific set of performance standards have been established that correspond to the stated mitigation goals and objectives. These standards are the primary factors that will be used to judge the success of the rehabilitation project. It will be important to evaluate the development of the stream rehabilitation program over the entire monitoring period when determining whether each individual standard has been met or not. While specific performance criteria provide important benchmarks and will help to direct maintenance and contingency efforts, the success of rehabilitation must be evaluated against the goals and objectives of the overall program. By monitoring the project and comparing monitoring results to performance standards, a determination can be made as to the need for implementing maintenance efforts or the contingency plan. The performance standards are:

1. There will be 100 percent survival of installed plant species at the end of the one year warranty period. The warranty inspection will be conducted by a qualified Wetland Biologist or Landscape Architect. The results of the inspection will be tabulated and presented to the Owner who shall inform the contractor with the recommendations for replacement.

2. Percent survival of riparian plantings as measured in year 1–5 are as follows: Year 1, 100 percent; Year 2, 80 percent; Year 3, 75 percent; Year 4, 70 percent and Year 5, 70 percent.

3. The percent cover of non–native invasive species will be less than 15 percent after five years in the stream rehabilitation areas. No Japanese Knotweed shall be permitted within the stream rehabilitation areas during the 5 year monitoring period. All Japanese Knotweed observed shall be removed with maintenance procedures and discarded off site.

4. The condition of the stream channel in East Creek will be monitored in years 1,2,3,4 and 5. Monitoring will include documentation of fish use, condition of pools and assessment of fish passage potential through the project reach. Collected stream condition data will be included in the annual mitigation monitoring reports.

DAVID EVANS AND ASSOCIATES INC.
415 - 118th Avenue SE
Bellevue Washington 98005-3518
Phone: 425.519.6500

PROJECT: EAST CREEK STREAM REHABILITATION

TITLE: JARPA EXHIBIT - EAST CREEK BASIN

STREAM MONITORING PLAN

SHEET

COUNTY	PROJECT	SCALE	DATUM
KING	AMIN0000-0001	AS NOTED	NAVD 88
DRAWN BY	DESIGN BY	APPROVED BY	DATE
GBK	JCGA	JASH	8-18-08

EXH. 5A

4.0 MONITORING PLAN

The objective of the monitoring program over its five-year duration will be to: (1) verify condition of daylighted stream channel : (2) assess revegetation success in the riparian areas, and (3) verify the non-native invasive species are not precluding establishment of the planted mitigation species. Results of all monitoring will be included in Year 1, 2, 3, 4, and 5 monitoring reports submitted to the City and Corps of Engineers by December 31 of each monitoring year. The monitoring results will be related to the performance standards and recommendations will be made based on these findings.

4.2 STREAM CHANNEL ESTABLISHMENT

The success of the stream rehabilitation will be evaluated during Years 1, 2, 3, 4, and 5 of the monitoring program. A total count of all fish, habitat types and fish barriers will be conducted each year. Rehabilitation success will be evaluated by documenting increasing fish use and habitat type diversity. No fish barriers shall develop during the monitoring time frame. In addition to the monitoring a general visual inspection with photographs will be conducted.

4.3 VEGETATION ESTABLISHMENT

The establishment and success of the rehabilitation plantings will be evaluated during Years 1, 2, 3, 4, and 5 of the monitoring program. A total count of all trees and shrubs will be conducted one year after installation. This first-year monitoring will serve as the one-year warranty inspection.

Planting success in the mitigation areas will be evaluated by assessing percent survival.

In addition to the quantitative monitoring, a general visual inspection of the mitigation areas will be conducted each year to determine the condition of the plant materials and the need for removal of invasive plants. Photopoints will be established at each mitigation area to allow a visual comparison of vegetative development. Photos will be taken from established photopoint locations, in the mitigation areas, during the annual monitoring visits. Photos will be included in the annual mitigation monitoring reports.

4.1 MONITORING SCHEDULE

Table 1: Monitoring Schedule

Monitoring Year	Task	Expected Date
Construction	Mitigation Installation	2009
Year 0	Planting Complete As-Builts	September 2009 December 2009
Year 1	Stream Channel Inspection, Warranty Plant Inspection and Quantitative Vegetation Monitoring, Monitoring Report	September 2010 December 2010
Year 2	Stream Channel Inspection, Vegetation Monitoring Monitoring Report	September 2011 December 2011
Year 3	Stream channel Inspection, Vegetation Monitoring Monitoring Report	September 2012 December 2012
Year 4	Stream channel Inspection, Vegetation Monitoring Monitoring Report	September 2013 December 2013
Year 5	Stream channel Inspection, Vegetation Monitoring Final Monitoring Report	September 2014 December 2014

5.0 MAINTENANCE PLAN

Maintenance within the mitigation areas will be performed by the Landscape Contractor in Years 1 during the one year warranty period. Maintenance tasks following the warranty period will be directed by the owner or under direction of the Owner's Representative. Required maintenance activities are included in Table 2.

Table 2: Maintenance Tasks

Activity	Schedule	Special Notes
Replace all failed mitigation plantings.	One year following planting. Then as required to meet performance standards.	By landscape contractor.
Temporary irrigation of new plantings.	At least weekly, June through September for two years following planting.	All plants must receive one inch of water during each watering by landscape contractor.
Weeding	At least once each year for years 1, 2, 3, 4 and 5 of the five year monitoring period	Trees and shrubs must be weeded to the dripline and mulch maintained at 2 inches depth. By landscape contractor.
Clear and grub undesirable invasive plants from NGPA. Undesirable species include: Himalayan Blackberry Evergreen Blackberry Scot's Broom English Ivy Purple Loose Strife Morning Glory Climbing Nightshade Japanese Knotweed Reed Canarygrass	As required in biannual monitoring reports.	Removal should be as directed by monitoring biologist. Clearing and grubbing should be accomplished by physically (non-mechanical) removing plant materials (including root masses) or hand trimming by landscape contractor. Weeds must be properly disposed of off-site.