UTILITIES DEPARTMENT

SANITARY SEWER ENGINEERING STANDARDS

JANUARY 2008

SANITARY SEWER ENGINEERING STANDARDS

TABLE OF CONTENTS

CHAPTER S1 – GENERAL REQUIREMENTS

S1-01 GENERAL ..... S1 - 1

S1-02 DEFINITIONS ..... S1 - 1

S1-03 REFERENCES ..... S1 - 3

S1-04 GOVERNMENTAL AGENCY REQUIREMENTS ..... S1 - 4

CHAPTER S2 – PLAN SUBMITTAL

S2-01 GENERAL ..... S2 - 1

S2-02 DEVIATIONS ..... S2 - 1

S2-03 ERRORS AND OMISSIONS ..... S2 - 1

S2-04 PLANS ..... S2 - 2

S2-05 AS-BUILT DOCUMENTATION ..... S2 - 7

CHAPTER S3 – SEWER PLANNING/DESIGN STANDARDS

S3-01 PLANNING CRITERIA ..... S3 - 1

S3-02 GENERAL DESIGN STANDARDS ..... S3 - 2

S3-03 MAIN LINES ..... S3 - 3

S3-04 MANHOLES ..... S3 - 4

S3-05 PIPE CLASS – PROTECTION – COVER ..... S3 - 7

S3-06 CLEARANCES – OTHER UTILITIES ..... S3 - 8

S3-07 CONNECTIONS TO EXISTING SYSTEM ..... S3 – 9

S3-08 FATS, OILS, GREASE SEPARATION ..... S3 - 10

S3-09 EASEMENTS ..... S3 - 12

S3-10 SIDE SEWERS ..... S3 - 13

CHAPTER S4 – SEWER MATERIALS

S4-01 GENERAL ..... S4 - 1

S4-02 GRAVITY SEWER PIPE & FITTINGS ..... S4 - 1

S4-03 PRESSURE SEWER PIPE ..... S4 - 2

S4-04 HDPE PIPE ..... S4 - 2

S4-05 ABS PIPE & FITTINGS ..... S4 - 3

S4-06 FITTINGS ..... S4 - 3

S4-07 CAPS AND PLUGS ..... S4 - 3

S4-08 BOLTS IN PIPING ..... S4 - 3

S4-09 FLANGE GASKETS ..... S4 - 4

S4-10 GATE VALVE ..... S4 - 4

S4-11 VALVE BOX ..... S4 - 4

S4-12 VALVE OPERATING NUT EXTENSION ..... S4 - 4

S4-13 MANHOLES ..... S4 - 4

S4-14 MANHOLE RING & COVER ..... S4 - 5

S4-15 CONCRETE BEDDING & BLOCKING ..... S4 - 6

S4-16 OIL/WATER SEPARATOR ..... S4 - 6

S4-17 GREASE INTERCEPTOR ..... S4 - 6

S4-18 COMMERCIAL CLEAN-OUT WITH TEST SAMPLING TEE ..... S4 - 7

S4-19 BACKWATER VALVE ..... S4 - 7

S4-20 MECHANICAL SEWER PLUG FOR LAKELINE CLEAN-OUT ..... S4 - 7

S4-21 BARRIER FENCE ..... S4 – 8

S4-22 GRAVEL ..... S4 - 8

S4-23 STEEL CASING ..... S4 - 9

S4-24 CASING SPACER ..... S4 - 9

S4-25 CONTROLLED DENSITY FILL ..... S4 - 11

S4-26 NEOPRENE FOAM PAD ..... S4 - 11

CHAPTER S5 – SEWER METHODS OF CONSTRUCTION

S5-01 GENERAL CONSTRUCTION REQUIREMENTS ..... S5 - 1

S5-02 GRADE ESTABLISHMENT ..... S5 - 1

S5-03 MANHOLE EXCAVATION ..... S5 - 2

S5-04 PIPE LAYING ..... S5 - 2

S5-05 ALIGNMENT TOLERANCE ..... S5 - 3

S5-06 JOINTS ..... S5 - 3

S5-07 PRESSURE SEWER MAINS AND VALVES ..... S5 - 4

S5-08 PIPE BEDDING ..... S5 - 5

S5-09 SIDE SEWERS ..... S5 - 5

S5-10 MANHOLES ..... S5 - 6

S5-11 CONNECTION TO EXISTING MANHOLE ..... S5 - 7

S5-12 CLEANING & FLUSHING ..... S5 - 8

S5-13 TESTING OF GRAVITY SEWERS ..... S5 – 9

S5-14 TELEVISION INSPECTION ..... S5 - 12

S5-15 TESTING OF PRESSURE SEWER MAINS ..... S5 - 12

S5-16 OIL/WATER SEPARATOR ..... S5 - 12

S5-17 GREASE INTERCEPTOR ..... S5 - 13
S5-18 COMMERCIAL CLEAN-OUT WITH TEST SAMPLING TEE ..... S5 - 14
S5-19 BACKWATER VALVE ..... S5 - 14
S5-20 LAKE LINE CLEAN-OUT ..... S5 - 14
S5-21 PRECONSTRUCTION PHOTOS FOR CITY CONTRACTS ..... S5 - 15
S5-22 UNDERGROUND UTILITIES ..... S5 - 15
S5-23 CONSTRUCTION ON EASEMENTS ..... S5 - 16
S5-24 DUST CONTROL ..... S5 - 16
S5-25 BARRIER FENCE ..... S5 - 16
S5-26 TRENCH EXCAVATION ..... S5 - 16
S5-27 TRENCHLESS EXCAVATION ..... S5 - 17
S5-28 SHEETING & SHORING ..... S5 - 18
S5-29 TRENCH DEWATERING ..... S5 - 18
S5-30 TRENCH BACKFILL AND COMPACTION ..... S5 - 18
S5-31 ADJUST EXISTING STRUCTURE TO GRADE ..... S5 - 20
S5-32 ABANDONING FACILITIES ..... S5 - 21
S5-33 LAWN REMOVAL AND REPLACEMENT ..... S5 - 21
S5-34 BORING UNDER ROOTS ..... S5 - 22
S5-35 HIGHWAY AND RAILWAY CROSSINGS ..... S5 - 22
S5-36 BORING AND JACKING STEEL CASING ..... S5 - 22
S5-37 WORKING WITH ASBESTOS CEMENT PIPE ..... S5 - 23
S5-38 ASBESTOS CEMENT WATERMAIN CROSSINGS ..... S5 - 23
S5-39 CONTROLLED DENSITY FILL ..... S5 - 23

S5-40 CLEARANCES/OTHER UTILITIES ..... S5 - 24

CHAPTER S6 – SIDE SEWER REGULATIONS

S6-01 GENERAL ..... S6 - 1

S6-02 CONNECTION REQUIRED ..... S6 - 1

S6-03 SIDE SEWER CONTRACTORS LICENSE ..... S6 - 1

S6-04 SIDE SEWER PERMIT ..... S6 - 3

S6-05 HOLD HARMLESS ..... S6 - 5

S6-06 GENERAL UTILITY NOTIFICATION REQUIREMENTS ..... S6 - 5

S6-07 GENERAL CONSTRUCTION REQUIREMENTS ..... S6 - 5

S6-08 SIDE SEWER FITTINGS REQUIREMENTS ..... S6 - 7

S6-09 JOINT-USE SIDE SEWER ..... S6 - 8

S6-10 CONNECTION REQUIREMENTS ..... S6 - 9

S6-11 EXCAVATIONS ..... S6 - 9

S6-12 LAYING PIPE ..... S6 - 10

S6-13 INSPECTION AND TESTING ..... S6 - 10

S6-14 SPECIAL REQUIREMENTS ..... S6 - 11

S6-15 SIDE SEWER DEMOLITION ..... S6 - 13

S6-16 SPECIFICATIONS NOT COVERED BY THESE REGULATIONS ..... S6 - 13

APPENDIX

APPENDIX S-1
SANITARY SEWER STANDARD DETAILS ..... A(S1 - 1)

APPENDIX S-2
DRAFTING STANDARDS ..... A(S2 - 1)

APPENDIX S-3
SAMPLE TITLE BLOCK ..... A(S3 - 1)

APPENDIX S-4
SEWER APPROVED MATERIALS LIST..... A(S4 - 1)

CHAPTER S1 - GENERAL REQUIREMENTS

TABLE OF CONTENTS

S1-01 GENERAL ..... S1 - 1

S1-02 DEFINITIONS ..... S1 - 1

S1-03 REFERENCES ..... S1 - 3

S1-04 GOVERNMENTAL AGENCY REQUIREMENTS ..... S1 - 4

CHAPTER S1 - GENERAL REQUIREMENTS

S1-01 GENERAL

These Engineering Standards set forth minimum standards for the planning, design, and construction of sanitary sewer collection facilities.

The Sewer Utility Code, part of Chapter 24.04 of the Bellevue City Code, adopted April 3, 1995, is the basis for these Engineering Standards.

These standards do not include design of special facilities, such as Pump Stations or Sewage Lift Stations. These special facilities require unique design requirements and will be subject to individual review by the Utility.

Although these standards are intended to apply to physical development within the Utility, the standards will not apply for all situations. Compliance with these standards does not relieve the designer of the responsibility to apply conservative and sound professional judgement. These are minimum standards and are intended to assist, but not substitute for competent work by design professionals. The Utility may at it's sole discretion due to special conditions and/or environmental constraints, require more stringent requirements than would normally be required under these standards.

S1-02 DEFINITIONS

The following terms as used in this document shall be defined and interpreted as follows:

"Central Business District (CBD)"

That area of Bellevue generally bounded by Main Street, NE 12th Street, 100th Avenue NE, and 112th Avenue NE.

"Contractor"

The person, partnership, firm or corporation contracting to do the work under these Documents. The term shall also include the Contractor's agents, employees and subcontractors.

"Details or Additional Drawings"

All details or drawings prepared to further explain or amplify the plans, or for the revision of the same, all as herein provided.

"Developer"

Any individual, company, partnership, joint venture, corporation, association, society or group that has made, or intends to make, application to the City for permission to construct a sanitary sewer system connection, or extension, to the City's sanitary sewer system.

"Engineer"

The City of Bellevue Utilities Engineer or his duly authorized assistants, which includes Chief Engineer, Project Engineer, Consultant Engineer and/or Inspectors.

"Equipment"

The machinery, accessories, appurtenances and manufactured articles to be furnished and/or installed under the Project.

"Material or Materials"

These words shall be construed to embrace machinery, manufactured articles, materials of construction (fabricated or otherwise) and any other classes of material to be furnished in connection with the Project.

"Or Equal"

Any manufactured article, material, method, or work which, in the opinion of the Engineer, is equally desirable or suitable for the purposes intended in these standards, as compared with similar articles specifically mentioned herein.

"Plans"

All official drawings or reproductions of drawings made or to be made pertaining to the work provided for in the permit or developer extension agreement.

"Project"

The structure or improvement to be constructed in whole or in part.

"Reference Specifications"

Reference specifications shall mean the technical specifications of other agencies incorporated or referred to herein.

"Specification"

The specifications shall mean the prescribed directions, requirements, explanations, terms and provisions pertaining to the various features of the work to be done, or manner and method of performance. They also include directions, requirements, and explanations as set forth on the plans.

"Standard Details"

City of Bellevue Utilities Department standard detail drawings.

"Standard Specifications"

Latest edition of the Standard Specifications for Road, Bridge and Municipal Construction", Washington State Department of Transportation and the American Public Works Association including all amendments.

"Words and Phrases"

Whenever the words, "as directed", "as required", "as permitted", or words of like effect are used, it shall be understood that the direction, requirement or permission of the Engineer is intended. The words, "sufficient", "necessary", "proper", and the like shall mean sufficient, necessary or proper in the judgment of the Engineer. The words, "approved", "acceptable", "satisfactory", or words of like import shall mean approved by or acceptable to the Engineer.

Work

The work necessary to manufacture and deliver machinery, equipment and material and/or the furnishing of all labor, tools, material, equipment, construction equipment, working drawings, where required, and other necessities for the construction or erection of the structures shown and called for in the plans, specifications and permit/Developer Extension Agreement, and the act of constructing or erecting said structures completely.

S1-03 REFERENCES

Wherever references are made to the standards, specifications, or other published data of the various national, regional, or local organizations, such organizations may be referred to by their acronym or abbreviation only. As a guide to the user, the following acronyms or abbreviations which may appear, shall have the meanings indicated herein:

AASHTO	American Association of the State Highway and Transportation Officials.
ANSI	American National Standards Institute, Inc.
WSDOT	Washington State Department of Transportation

APWA	American Public Works Association
ASTM	American Society for Testing and Materials
AWWA	American Water Works Association
DOH	Department of Health
WAC	Washington Administrative Code

S1-04 GOVERNMENTAL AGENCY REQUIREMENTS

All construction on City, County or State roads or right-of-way shall be done in accordance with the agency's standards and requirements and in accordance with the franchise and/or permit requirements. The Contractor is responsible to determine these requirements prior to construction.

Where conflict exists between these Standards and permit requirements, the most stringent permit requirements shall take precedence.

CHAPTER S2 – PLAN SUBMITTAL

TABLE OF CONTENTS

S2-01 GENERAL ..... S2 - 1

S2-02 DEVIATIONS ..... S2 - 1

S2-03 ERRORS AND OMISSIONS ..... S2 - 1

S2-04 PLANS ..... S2 - 2

S2-05 AS-BUILT DOCUMENTATION ..... S2 - 7

CHAPTER S2 - PLAN SUBMITTAL

S2-01 GENERAL

Following these standards to design the sanitary sewer system will help ensure a timely review of the proposed project and keep review costs to a minimum.

S2-02 DEVIATIONS

S2-02.1 General

The Developer may propose a deviation from the Standards. A non-standard system may take longer to review resulting in increased processing costs. The Developer acknowledges these risks when submitting a non-standard system for review.

S2-02.2 Deviation Criteria

Requests for deviations which are site or project specific, shall be reviewed by the Utilities Technical Committee (Engineering Team). The City's decision to grant, deny, or modify the proposed deviation shall be based upon evidence that the deviation request meets the following criteria:

A. The change will achieve the intended result through a comparable or even superior design; and

B. The change will not adversely affect safety and/or operation; and

C. The change will not adversely affect maintainability.

S2-03 ERRORS AND OMISSIONS

Any errors or omissions in the approved plans or information used as a basis for such approvals may constitute grounds for withdrawal of any approvals and/or stoppage of any or all of the permitted work as determined by the City. It shall be the responsibility of the Developer to show cause why such work should continue, and make such changes in plans that may be required by the City before the plans are re-approved.

S2-04 PLANS

S2-04.1 General

Utility plans submitted for review shall meet "Boundary & Topographic Survey" and "Site Plan B" requirements. Current copies of these requirements are available at the City Hall Permit Center. The Utilities representative at the Permit Center will determine which requirements, if any, are not applicable to the proposed project.

Developers shall provide complete, surveyed as-built drawings of existing and newly constructed sewer and storm utilities pertaining to the area of development.

S2-04.2 Submittal Standards

Combining Plans - Water, sanitary sewer and storm drainage designs (complete plan and profile) shall be on separate plan sheets, although alignments of all Utilities shall be shown on each utility plan. Plan sets for all three Utilities can be combined for small projects. Designs for water and sewer can be combined on the same plan sheets if plan scale is 1" = 10', 1" = 20', or 1" = 30'. Contact the Utility representative in the Permit Center for approval to combine plans.

Submittals shall include:

Title Block - Border and title block shall conform to standard City of Bellevue format. See Appendix S-3.

Project Name, Section - Township - Range, and Site Address shall be included in title block (lower right hand corner).

Engineering Plans - Plan, profile and detail sheet(s) for the proposed sewer system.

Scale - Be consistent, and indicate your scale on each sheet using a bar symbol (for plan reproduction integrity). Drawings are to be at a scale of 1"=10', 1"=20', or 1"=30' for combined utility plans. Drawings at 1"=40' or 1"=50' scale shall show utility plans on separate sheets. Architectural scales for utility drawings will not be accepted. If the scale results in more than three pages of plan sheets, a cover sheet showing the entire project site (at a smaller scale) shall be provided.

North Arrow - Include on all plan view drawings. Where possible, north arrow shall face up and/or to the right hand side of plan sheet.

Datum - Show both horizontal (NAD-83-91) and vertical (NAVD 88) control points. List vertical datum on plan and specify the bench mark to be used for

vertical control during construction.

Vicinity Map - Include on the plan for each utility. The vicinity map covers the project site and surrounding streets and property within a minimum of 600' of the site. Copies of a city map can be made from the Street Atlas in the Self Help area of the Permit Center.

Drawing Quality - The drawing should be easy to read, with all lines and letters dark enough to provide good contrast with the paper.

Drafting Media - Plans sheets shall be on 24" x 36"or 22" x 34" mylar, matte on both sides.

Drafting Standards - Plotting shall be on mylar with a non-smudging, ink or ink-like media. Pencil drawings (including corrections or alterations) will not be accepted.

Drafting Standards/Symbols shall conform to Washington State APWA Chapter CAD Standards. See Appendix S-2. Lettering shall be done with "Leroy-style" font (SIMPLEX font if using AutoCAD^{tm}).

Text identifying existing features shall be 0.08" in height (Leroy 80 template).

Text identifying street names shall be 0.24" in height (Leroy 240 template).

Text for instructions and call outs for proposed facilities shall be 0.12" in height (Leroy 120 template).

On plans with more than one sheet, stationing shall proceed from left to right or from bottom to top.

Upon approval for construction, final plans shall be provided in digital format for as-builting and permanent record. The digital format shall be AutoCAD^{tm} (latest release) ".DWG" file on an MS-DOS formatted 3.5" floppy disk or Zip disks. The AutoCAD^{tm} files shall include all plans, profiles, notes, and details of the sanitary sewer improvements.

Making Copies of Plans - Blueline or blackline prints and photocopies are acceptable. Brownline prints and microfilm copies of plans will not be accepted.

Type of Paper for Plan Copies - Blueprint quality or standard drafting paper. Tissue paper, graph paper, posterboard, cardboard, and similar materials will not be accepted.

S2-04.3 Sanitary Sewer General Plan Notes

The following is a listing of General Notes that should be incorporated on the first sanitary sewer plan sheet. All the notes on the list may not pertain to every project. The Developer should include only those notes that are relevant to the project and may omit non-relevant notes.

However, do not renumber the remaining General Notes. If additional notes are needed for specific aspects, they should be added after the General Notes.

Sanitary Sewer General Notes:

1. All work shall conform to the 2008 City of Bellevue Utility Engineering Standards and the Developer Extension Agreement.

2. All new manholes shall have a minimum inside diameter of 48" and shall conform to the Standard Details.

3. Sanitary sewer pipe shall be PVC conforming to ASTM D-3034 SDR 35 (4"-15") or ASTM F-679 (18"-27"). Bedding and backfill shall be as shown in the Standard Details.

4. Where shown as C-900 PVC, the sewer pipe shall be pressure class 150 (DR 18) conforming to AWWA C-900.

5. All side sewers shall be 6" diameter pipe at a minimum 2% slope, unless otherwise noted on the Standard Details.

6. Side sewer stations are referenced from nearest downstream manhole.

7. Lot corners must be set and side sewer locations verified in the field prior to construction.

8. All side sewer stubs shall be capped with a watertight cap and gasket. Cap location shall be marked with a 2 x 4 stake, 12 feet long, with one end buried at depth of the cap invert and extending at least 3 feet vertically out of the ground. The portion of stake above ground shall be painted white and marked with the word "SEWER" and the depth from pipe invert to ground surface. Connect pipe to stake with an 8-gauge wire at or above finished ground level.

9. The locations of all existing utilities shown hereon have been established by field survey or obtained from available records and should therefore be considered approximate only and not necessarily complete. It is the sole

responsibility of the contractor to independently verify the accuracy of all utility locations shown, and to further discover and avoid any other utilities not shown hereon which may be affected by the implementation of this plan. Immediately notify the Engineer if a conflict exists.

10. All testing and connections to existing mains shall be done in the presence of a representative of the City of Bellevue Utilities Department.

11. All trenches shall be compacted, and ATB in place in paved areas, prior to testing sewer lines for acceptance.

12. Side sewer shall be tested for acceptance at the same time the main sewer is tested.

13. Tops of manholes within public rights-of-way shall not be adjusted to final grade until just prior to paving.

14. All manholes in unpaved areas shall include a concrete seal around adjusting rings per Standard Detail.

15. Contractor shall adjust all manhole rims to flush with final finished grades, unless otherwise shown.

16. All sewer main extensions within the public right-of-way or in easements must be “staked” by a surveyor licensed in Washington State for “line and grade” and cut sheets provided to the Engineer, prior to starting construction.

17. Contractor shall install, at all connections to existing down stream manholes, screens or plugs to prevent foreign materials from entering existing sanitary sewer system. Screens or plugs shall remain in place throughout the duration of construction and shall be removed along with collected debris at the time of final inspection and in the presence of a representative of the City of Bellevue Utilities Department.

18. Surface restoration of existing asphalt pavement shall be as required by the right-of-way use permit.

19. The Contractor shall maintain a minimum of ten feet (10') horizontal separation between all water and sewer lines. Any conflicts shall be reported to the Utility and the Engineer prior to construction.

20. It shall be the Contractor’s responsibility to insure that no conflicts exist between sanitary sewer lines and proposed or existing utilities prior to

construction.

21. Minimum cover over sewer pipe shall be five feet, unless otherwise shown.

22. The Contractor shall use a vacuum street sweeper to remove dust and debris from pavement areas as directed by the Engineer. Flushing of streets shall not be permitted without prior City approval.

23. Before commencement of trenching, the Contractor shall provide filter fabric for all downhill storm drain inlets and catch basins, that will receive runoff from the project site. The Contractor shall periodically inspect the condition of all filter fabric and replace as necessary.

    For all construction during the rainy season, downhill basins and inlets must be protected with catch basin inserts. Simply placing filter fabric under the grate is not acceptable.

24. Side sewer demolition shall be performed prior to removal of building foundation. The side sewer for each building shall be excavated and removed
    from the house connection to the edge of the public right-of-way, or property line. The Contractor shall cap the end of the side sewer to remain in place. Side sewer demolition shall be performed in the presence of the City of Bellevue Sewer Maintenance Engineering Technician.

25. Avoid crossing water or sewer mains at highly acute angles. The smallest angle measure between utilities should be 45 to 90 degrees.

26. At points where existing thrust blocking is found, minimum clearance between the concrete blocking and other buried utilities or structures shall be 5 feet.

27. Where new utility line crosses below an existing AC main, the AC pipe shall be replaced with DI pipe to 3 feet past each side of the trench as shown on Standard Detail W-7. Alternatively, where directed by the Engineer, the trench shall be backfilled with controlled density fill (CDF, aka flowable fill) from bottom of trench to bottom of the AC main.

28. Call 1-800-424-5555, or 811, 72 hours before construction for utility locates.

29. Manholes, catch basins and vaults are considered to be permit-required confined spaces. Entry into these spaces shall be in accordance with Chapter 296-62 WAC, Part M - Confined Spaces.

30. The Contractor shall provide a videotape (DVD or VHS format, standard mode) of the sewer pipe interior for the City's review. The video shall provide a minimum of 14 lines per millimeter resolution and cover the entire length of the applicable pipe. The camera shall be moved through the pipe at a uniform rate (≤ 30 ft/min), stopping when necessary to ensure proper documentation of the pipe condition. The video shall be taken after installation and cleaning to insure that no defects exist. The project will not be accepted until all defects have been repaired.

31. When work is to occur in easements, the Contractor shall notify the easement grantor and Bellevue Utilities in writing a minimum of 48 hours in advance of beginning work (not including weekends or holidays). Failure to notify grantor and Bellevue Utilities will result in a Stop Work Order being posted until the matter is resolved to the satisfaction of Bellevue Utilities. A written release from the easement grantor shall be furnished to the Utilities Inspector prior to permit sign-off.

32. The Contractor shall restore the Right-of-Way and existing public sewer easement(s) after construction to a condition equal or better than condition prior to entry. The Contractor shall furnish a signed release from all affected property owners after restoration has been completed.

S2-05 AS-BUILT DOCUMENTATION

S2-05.1 General Standards

For all wastewater projects, the Developer or City Department responsible for the project shall provide as-built plans at completion of the project.

As-built plans shall be based on field survey information. All survey work shall be performed under the supervision of a Professional Land Surveyor registered in the State of Washington. The surveyed as-built shall contain the following information submitted in both electronic (AutoCAD) format and on a mylar plan stamped and signed by the surveyor. Horizontal locations shall be recorded to within one tenth (0.1') of a foot. Rim and invert elevations at drainage and wastewater structures shall be recorded to within one one-hundredth (0.01') of a foot. Use *Washington Coordinate System NAD83 (1991) – North Zone* as the basis of bearings for all surveys. Prepare survey according to City of Bellevue NAVD 1988 vertical datum and state that it was the datum used.

All pipe lengths and dimensions are based on horizontal distances, unless slope is too steep to measure horizontal distance, inspector should note that length is "slope distance".

References/dimensions from right-of-way centerline for utility features in the public

right-of-way, or from property line for utility features located within easements.

As-built information shall be recorded on plan and profile views of the contract drawings. The profile view shall note any changes from the design finished grade over each pipe line.

As-built plans shall be submitted to Bellevue Utilities using the approved plan set as the basis for the redlined as-built plans. An as-built plan set in digital format shall also be submitted. The digital format shall be in the most current AutoCAD Release in use by the City. The "DWG" file(s) shall be submitted on CD ROM.

S2-05.2 Required Information

Mains: Length (center of manhole to center of manhole), diameter, material, slope, direction of flow, note "private" if applicable. Show private systems going to apartments, condominiums, commercial sites, and joint-use side sewers. Label private system lines as "PRIVATE SYSTEM". Other than joint-use systems, do not show single family private systems, other than stub from public main.

Stubs: Lengths, depth, material, station (stationing of stubs referenced from downstream manhole), distance from property line. List slope if different than standard 2% and size if different than standard 6". Side sewer as-builts shall not be provided for grid-drafting, except where hole cut is made to the main; the Inspector shall show saddle and stub.

Manholes: Manhole ID number, rim elevation, invert elevations (indicate direction of flow IN or OUT), drop (if applicable), size (if not standard 48").

Cleanouts: Station, invert elevation, top elevation.

Existing Structures: Where new pipes connect to existing manholes, the Utilities ID number of the existing manhole shall be noted on the drawing. ID numbers can be obtained from the Sewer Grid Maps.

CHAPTER S3 – SEWER PLANNING/DESIGN STANDARDS

TABLE OF CONTENTS

S3-01	PLANNING CRITERIA	S3 - 1
S3-02	GENERAL DESIGN STANDARDS	S3 - 2
S3-03	MAIN LINES	S3 - 3
S3-04	MANHOLES	S3 - 4
S3-05	PIPE CLASS – PROTECTION – COVER	S3 - 7
S3-06	CLEARANCES – OTHER UTILITIES	S3 - 8
S3-07	CONNECTIONS TO EXISTING SYSTEM	S3 - 9
S3-08	FATS, OILS, GREASE SEPARATION	S3 - 10
S3-09	EASEMENTS	S3 - 12
S3-10	SIDE SEWERS	S3 - 13

CHAPTER S3 - SEWER PLANNING/DESIGN STANDARDS

S3-01 PLANNING CRITERIA

S3-01.1 Serve to Extreme of Property

Ensure adjacent properties can be provided sewer service (extend to extreme of property and design for the ultimate development of the tributary areas).

Sewer service shall be provided by a gravity system (unless approved by the Utility).

S3-01.2 Demand Projections

Demand projections are taken from City of Bellevue 1994 Comprehensive Sewer Plan:

A. Unit Demands

Residential - 70 gallons per capita per day (GPCD)
Commercial - 20 GPCD

B. Population Densities

3.1 People per single family unit
1.8 People per multi-family unit

C. Peaking Factors

1. Where average day demands are between 0 and 1050 gpm, the design peaking factor will vary linearly between 4 and 2.5 respectively.

2. Where average day demands are greater than 1050 gpm the design peaking shall be 2.5.

S3-01.3 Infiltration/Inflow (I/I) Allowances

A. For new systems an I/I allowance of 1100 gallons per acre per day (GPAD) shall be used.

B. On existing sewer systems, I/I allowance shall be determined through analysis.

S3-01.4 System Parameters

A. New sewer lines shall be designed so that, under ultimate development, peak flow, including I/I, shall not exceed 50% capacity of the line. Existing lines can have peak flows to 75% capacity of the line. Bellevue Utilities Department, Planning Section staff will model sewer capacity needs and determine required pipe sizes using HYDRA tmVersion 5.67 by Pizer, Inc. or other City approved modeling software program. Engineering design submittals must conform to the City's required pipe sizes.

B. No storm drainage connections shall be made to the sanitary sewer system, unless approved by the Utility and only under special circumstances, i.e. covered parking or wash down areas around garbage collection dumpsters with an area less than 200 square feet.

Uncovered garbage dumpster areas less than 200 square feet may discharge to the sanitary sewer. Uncovered garbage dumpster areas greater than 200 square feet must discharge to the storm system after passing through a grease interceptor, designed per S3-08.2 of these Standards. Additional requirements regarding garbage dumpster areas are addressed in Chapter D5 of these Standards.

S3-02 GENERAL DESIGN STANDARDS

A. All lengths and dimensions shall be horizontal distances, no slope distances on plans.

B. If working in existing streets, indicate type of pavement restoration required, or refer to Right-of-way use permit.

C. Dimension existing and new main locations from right-of-way line and/or property line, or label stations and offsets.

D. Check with Utility Development Division to determine how surrounding development will affect design (e.g. serve to extreme of property if adjacent property has potential for future development).

E. On plans, show existing manholes or give reference distances to existing manholes near project, including manhole number and invert/rim elevations.

F. Check with local jurisdiction for necessary permitting requirements.

G. Existing sewer lines to be abandoned shall be filled completely with sand, concrete, or controlled density fill; or removed.

H. Manholes connected to lines being abandoned shall be re-channeled with 3,000 psi cement concrete.

I. Side sewers and sewer mains shall not be used for the grounding of electrical systems or for the maintenance, integrity or continuity of any grounding attachment or connection.

J. Placement of surface appurtenances (manhole lids, water valve lids, etc.) in tire track of traffic lanes shall be avoided whenever possible.

K. Soil nails shall not be installed at or above pipes and shall include a minimum 5 foot clearance if installed below pipes.

S3-03 MAIN LINES

S3.03.1 Minimum Pipe Size

Minimum pipe size shall be 8 inches.

S3-03.2 Pipe Slope

A. Minimum slope shall be 0.01 ft/ft. Where slopes of 0.01 ft/ft do not allow an area to be served by gravity flow, the minimum slope shall be 0.005 ft/ft.

B. Maximum main line slope shall not induce velocities greater than 10 feet per second under daily peak flows.

C. Pipe anchor blocks shall be placed at 20' on center where pipe slope exceeds 20%.

D. Timber baffle/hill holders shall be required on unpaved slopes that exceed 20%, minimum spacing shall be 20' on center.

S3-03.3 Plan View

A. List pipe length, size and material along side of pipe, e.g. 150 L.F.- 8" PVC. Pipe material can be listed in a general note in lieu of listing along pipe.

B. Pipe length is to be based on horizontal distance between center of manholes.

C. Indicate direction of flow with arrows on end of pipe entering manhole.

S3-03.4 Profile View

A. List pipe length, size, material and slope to 4 decimal places (ft per ft), e.g. 150 L.F. - 8" PVC S=0.0125. Pipe material can be listed in a general note in lieu of listing on profile.

B. Slope is based on I.E. OUT of upstream manhole, I.E. INTO downstream manhole and horizontal distance between center of manholes.

S3-04 MANHOLES

A. Maximum distance between manholes shall be 400 feet.

B. All manhole covers shall be set flush with ground surface, except where otherwise designated by the Utility. Manholes in unpaved areas and easements shall have bolt-locking covers. All manholes in paved areas and sidewalks shall have standard, non-bolt locking covers.

C. Concrete perimeter seals shall be provided around all manhole adjustment sections:

Paved areas- asphalt concrete per Standard Detail.
Unpaved areas- cement concrete per Standard Detail.

D. Existing and Terminal Manholes:

When connecting to an existing manhole, all requirements of these Engineering Standards must be met. The design shall call-out all necessary revisions to the existing manhole, or if the existing manhole cannot be renovated to meet the standards, the manhole shall be removed and replaced with a conforming structure.

- When there is a potential for future main line extension from terminal manhole, position side sewer connections to manhole to avoid conflict with future main line connection to manhole.

- Terminal manholes (without side sewer connection) shall not be channeled. Slope manhole base to provide positive drainage toward pipe, use 3,000 psi cement concrete.

E. Where side sewer connects to manhole, invert of side sewer shall be equal to or above main sewer crown, but not to exceed 18" above invert of main sewer.

F. Drop in invert elevation across manhole shall at minimum be from 0.1 ft to 0.2 ft. In areas with sewer main slopes less than 0.005 ft/ft, lesser drops are allowed, to be determined by the Utility. In areas with sewer main slopes greater than 0.1 ft/ft, the drop should be designed to produce a slope across the manhole that is an average of the inlet and outlet pipe slopes. Maximum allowable drop in invert elevation across the manhole shall be 1.0 ft.

G. Manhole Sizing

48" manhole

1. 2 connecting pipes, up to 12" diam.
2. 3 connecting pipes, up to 10" pipe

54" manhole

1. 2 connecting pipes, 15" diam. to 21" diam.
2. 3 connecting pipes, 10" diam. to 15" diam.
3. 4 connecting pipes, up to 12" diam.

72" manhole

1. 2 connecting pipes, 21" diam. to 24" diam.
2. 3 connecting pipes, 15" diam.
3. 4 connecting pipes, 15" diam.

For other pipe configurations and hydraulic concerns, the size of the manhole will be investigated on a case by case basis.

The minimum angle between the incoming and the outgoing pipe shall be 90°; pipe shall be radial with the center of manhole.

The above configurations shall provide adequate shelves and room for maintenance and performing video inspections.

H. Channels shall be centered in manhole.

I. Ladder rungs shall be placed on side of manhole with largest shelf.

J. Any manhole less than 5' deep (rim to invert) shall have a concentric cone. All other manholes shall be provided with an eccentric cone.

K. Minimum manhole depths (invert to top of rim):

MANHOLE SIZE	PIPE SIZE	MIN MH DEPTH	COMMENTS
48"	6"	3.0'	"Manhole Under 5 Feet Deep" per Standard Detail S-6.
	8"	3.2'	
	10"-12"	3.5'	
54"	8"	3.7'	"Manhole Under 5 Feet Deep" per Standard Detail S-6.
	10"-12"	4.0'	
	15"-18"	4.5'	
72"	15"	8.0'	Flat-top manhole, 2 access lids (one over each major pipe entrance/exit) "Manhole Type 3 72" and 96"" per Standard Detail S-3.
	18"-24"	8.5'	
	27"	9.0'	

72" manholes over 11.5' in depth shall include 48" reducing section (WSDOT Type 2 Manhole "Manhole Type 2 72" and 96" per Standard Detail S-2).

L. Glass fiber supported plastic or PVC-hard lined manhole channels will be allowed at contractor's option.

M. Drop Manholes

- Minimum height of drop is 2.5'.
- Maximum height of drop is 20'.
- Outside drop structure is required on new manholes.
- Inside drop structure is allowed on connections to existing manholes.
- Where inside drop connection is within 90° from existing access and steps, the cone shall be rotated and steps relocated to provide maximum possible clearance from drop tee and pipe. When drop connection is made with 6" pipe, minimum clearance angle is 45°.

N. A vertical bend may be used in lieu of a manhole where:

1. Change in direction is vertical only (not allowed for horizontal change in direction or at pipe junctions).

2. Maximum allowable distance between manholes is not exceeded.

3. Change in slope is from flatter to steeper grade.

4. Minimum slope is 0.02 ft/ft.

5. Only one bend is installed between two manholes.

If necessary, the vertical bend shall be custom-made to provide the deflection required to meet grades on each side of the bend. The bend shall have sufficient length and radius to allow passage of the City's sewer video camera (42" long by 6" high). Bend dimensions shall be submitted along with plans for design review by the Utility.

The vertical bend shall be compatible with pipe material and shall meet or exceed the materials requirements specified in these engineering standards.

O. The burial of manholes or cleanouts is prohibited.

P. Manholes in easements shall be constructed to provide a stable, level grade for a minimum radius of 2.5 feet around the center of the access opening.

S3-05 PIPE CLASS - PROTECTION – COVER

A. PolyVinyl Chloride (PVC) pipe class designation:

All sewer pipe (including side sewer stubs) shall be PVC conforming to ASTM-D3034 SDR 35 (4"-15") or ASTM-F679 (18"- 27"), unless otherwise determined by the Utility.

Depth of cover over PVC pipe shall be 3' minimum and 20' maximum. Pipe depths outside this range will require use of pressure class PVC conforming to AWWA C-900 (dimension ratio 18).

B. PVC pipe shall be encased in a steel or ductile iron casing when crossing under improvements where the ability to remove and replace pipe without disturbance to the improvement is needed. Casings are required when:

- Crossing under rockeries over 4' high.
- Crossing under retaining wall footings over 4' wide.
- Crossing under reinforced earth retaining walls (both wall and reinforcing material).

Casings shall extend a minimum of 5' past each edge of the improvement, or a distance equal to the depth of pipe, whichever is greater. The carrier pipe shall be supported by casing spacers where casing length exceeds 10'.

Minimum clearance between bottom of rockery and top of pipe or casing shall be 2 feet. The trench shall be backfilled with crushed rock.

C. Ductile iron pipe, class 52, shall be used only where required by the Utility.

D. All buried metal pipe shall be encased in 8-mil polyethylene per AWWA C-105.

E. Building setback requirements:

- 5' minimum from covered parking.

- 10' minimum from buildings and retaining walls, or equal to depth of pipe, whichever is greater.

- 20' minimum easement shall be provided between buildings, on multi-family and commercial sites.

- When passing between any two buildings (residential or commercial, etc.) which are 25' apart or less, the easement width shall extend the full width between the buildings and the depth of the sewer line shall not exceed 10'.

S3-06 CLEARANCES - OTHER UTILITIES

A. All clearances listed below are from edge-to-edge of each pipe.

B. Water services and sewer stubs shall have at least 5' horizontal clearance.

C. Check for crossing or parallel utilities. Maintain minimum vertical and horizontal clearances. Avoid crossing at highly acute angles (the smallest angle measure between utilities should be between 45 and 90 degrees).

D. Horizontal clearances from sanitary sewer:

Cable TV	5'
Gas	5'
Power	10'
Storm	5'
Telephone, Fiber Optic	10'
Water	10'

E. Vertical clearances from sanitary sewer:

Cable TV	1'
Gas	1'
Power	1'
Storm	1'
Telephone, Fiber Optic	1'
Water	2'

F. Where sewer crosses above or below watermain, one full length of sewer pipe shall be used with the pipes centered for maximum joint separation. Washington Department of Ecology criteria will also apply.

G. Send letter and preliminary plan to existing utilities to inform them of new construction. Request as-built information and incorporate into plans. At minimum the following utilities should be contacted:

Cable television
Natural gas
Power
Storm drainage
Telephone, Fiber Optic
Water

S3-07 CONNECTIONS TO EXISTING SYSTEM

A. New sewer mains (8" and larger) shall connect to existing sewer main at existing manholes, or with new manhole on existing sewer per Standard Details.

B. When connect to existing manhole, core-drill opening for pipe and rechannel manhole base.

C. Where new main is larger in diameter than existing downstream main, check that capacity of existing main is not exceeded by flow from new main.

D. When connect to existing manhole, check that requirements of section S3-04.G. are satisfied.

E. If connect to existing manhole which has access less than 24" in diameter and/or concentric cone (manholes less than 5' deep), manhole shall be upgraded to include new 24" ring and cover and/or eccentric cone.

F. If connection to existing manhole places a channel directly under access opening, move ladder and rotate cone section to place access over concrete shelf.

G. Connections to end of existing pipe:

- If end of pipe is known to have a bell, and new pipe is same material as existing, plans can specify connection by inserting spigot of new pipe into existing bell end, with "donut" gasket.

- If existing line is plain end, or must be cut, plans shall specify use of a coupling to connect new and existing lines.

H. Approved couplings for use on sewer mains include:

Ductile iron mechanical couplings (equal to ROMAC) on ductile iron, concrete, vitrified clay, or pipes with differing materials or diameters.

On PVC or PE mains, PVC or PE couplings with compatible dimension ratio and gaskets to connect new and existing pipes shall be used.

Where a section of existing PVC pipe is replaced by "dropping-in" a new section of PVC pipe, the connections to existing pipe shall be made with PVC closure couplings (slip couplings).

S3-08 FATS, OILS, GREASE SEPARATION

S3-08.1 Oil/Water Separator

Whenever an industrial or commercial business generates mineral/petroleum/non-biodegradable cutting oils exceeding 100 milligrams per liter to be discharged to the sanitary sewer, pre-treatment is required. An oil/water separation device shall be installed by the property owner as specified on various Standard Details. Selection and sizing of an oil/water separator shall be subject to approval of the Utility. Water discharged from any oil/water separator to the sanitary sewer system shall not contain in excess of 100 milligrams per liter of petroleum oil, non-biodegradable cutting oil and mineral products, and shall be in compliance with the City of Bellevue and King County Wastewater

regulations for discharge to the sanitary sewer.

A. Sizing of a separator facility shall be based upon maximum available flow to the separator and provision of a **forty-five minute retention time** in the separator at that flow, with a minimum capacity of at least 100 gallons.

B. The oil/water separator shall be covered with removable sections. Access and inspection covers, weighing not more than 30 lbs. and with suitable hand holds, are to be provided directly above inspection "tee" and oil/grit collection compartments.

C. Only waste water from floor drains and covered parking areas shall drain to the separator. The location and design shall minimize or eliminate the possibility of storm water reaching the separator -- areas over two hundred square feet open to rainfall shall not drain to the separator. Sewage from restrooms and shower facilities shall not drain to the separator. See Standard Details.

D. Allowable materials for construction are as follows:

- ► Tank - concrete
- ► Baffles - concrete, steel plate

E. The separator shall be located within 20 feet of drive for access by maintenance vehicle.

F. A sampling tee shall be located on the outlet as shown on the Standard Details. Access to the separator shall be maintained free for inspection and compliance determination sampling at all times.

G. The effluent discharged from any oil/water separator to the sanitary sewer shall not exceed 100 parts per million total oil.

H. When pre-treatment is no longer required, the inlet and outlet pipes shall be permanently plugged, the separation chambers pumped out, and the vault removed, or filled with compacted crushed rock or controlled density fill.

S3-08.2 Grease Interceptor

Whenever a commercial and/or retail food preparation operation, regardless of size, generates animal/vegetable fats, oils or grease (F.O.G.) waste, which causes a visible sheen or accumulations in the effluent, to be discharged to the sanitary sewer, pre-treatment is required. A grease interception device as specified by the City of Bellevue Standard Details, and/or other biological, chemical, or other pretreatment

approved by the Utility, shall be installed by the owner. Effluent discharged from any grease interceptor shall not contain a visible sheen or accumulations of F.O.G., and shall be in compliance with the City of Bellevue and King County Wastewater regulations for discharge to the sanitary sewer.

A. Design of the grease interceptor shall conform to the standard details, and shall be subject to approval by the Utility. Size shall be determined by the City of Bellevue, F.O.G. administrator. Minimum capacity shall be 600 gallons except as noted by the City of Bellevue.

B. Fixtures in the kitchen area which discharge waste-water containing grease are to be connected to the grease interceptor. Such fixtures include dishwashers, pot sinks, range woks, janitor's sink, floor sinks, and rotoclones. Toilets, urinals, and wash basins shall not flow through the interceptor.

C. The interceptor shall be located outside the building within twenty feet of drive for access by maintenance vehicles.

D. The interceptor shall be filled with clean water prior to start-up of system.

E. Allowable materials for construction are as follows:

- ► Tank - concrete
- ► Baffles - concrete, plastic

F. Access to the interceptor shall be maintained free for inspection and compliance determination sampling at all times.

G. When pre-treatment is no longer required, the inlet and outlet pipes shall be permanently plugged, the separation chambers pumped out, and the vault removed, or filled with compacted crushed rock or controlled density fill.

S3-09 EASEMENTS

A. Show easements on all plans and identify width.

B. Show easements on all private property. If easement is defined as a constant width on each side of sewer main, then show a segment of the easement and label as typical (typ).

C. All easements shall be a minimum of 15' in width, or twice the depth of pipe, whichever is greater. Locate sewer main 10 feet from edge of easement facing interior of lot, to ensure setback from building.

D. Also see Section S3-05.E. “Building Setback Requirements”.

S3-10 SIDE SEWERS

A. Side sewer stub shall extend from main line to 10' past edge of property line. 6" pipe shall be used inside the public right-of-way (unless expected flows require larger size line).

B. 4" minimum pipe may be used inside private property, for residential side sewers from end of 6" stub to building, for a single connection contained within the lot.

6" minimum pipe shall be used for private joint-use sewers, and when crossing a property outside the lot to be served.

Commercial side sewers shall be a minimum 6" pipe.

For multi-family developments, side sewers for each separate building must be at least 6-inches in diameter, For those buildings serving over ten units or for side sewers serving more than one building, side sewers shall be a minimum of 8-inches in diameter and must connect to a manhole.

C. Side sewer shall have minimum 6' of cover at property line. Greater depths may be required where elevation of lowest floor to be served is lower than surface elevation at property line. Ensure that stub can serve all property by gravity flow.

D. Joint-use side sewer stubs are not allowed where slope of side sewer is less than 2%. Provide a single stub to “low” end of each lot, and show invert elevation of each stub on the plan. Uniform Plumbing Code may also require a backwater valve.

E. Side sewers shall connect to main sewers with a tee rather than a wye, unless otherwise approved by the Utility. Side sewer stubs shall run perpendicular to the sewer main, in the right-of-way. On plan, indicate station of side sewer tee from nearest downstream manhole. Also indicate length of side sewer stub from main to cap at end of line. Call out invert at capped-end of stub.

F. Minimum side sewer slope shall be 2 percent. Maximum slope shall be 100 percent.

G. All side sewer clean-outs on commercial and multi-family projects shall include at-grade access with covers per the Standard Detail.

H. Maximum distance between side sewer clean-outs shall be 100 feet.

I. See Section S6-09, Joint-Use Side Sewer, for additional requirements for single-family residential joint-use side sewers.

CHAPTER S4 – SEWER MATERIALS

TABLE OF CONTENTS

S4-01	GENERAL	S4 - 1
S4-02	GRAVITY SEWER PIPE & FITTINGS	S4 - 1
S4-03	PRESSURE SEWER PIPE	S4 - 2
S4-04	HDPE PIPE	S4 - 2
S4-05	ABS PIPE & FITTINGS	S4 - 3
S4-06	FITTINGS	S4 - 3
S4-07	CAPS AND PLUGS	S4 - 3
S4-08	BOLTS IN PIPING	S4 - 3
S4-09	FLANGE GASKETS	S4 - 4
S4-10	GATE VALVE	S4 - 4
S4-11	VALVE BOX	S4 - 4
S4-12	VALVE OPERATING NUT EXTENSION	S4 - 4
S4-13	MANHOLES	S4 - 4
S4-14	MANHOLE RING & COVER	S4 - 5
S4-15	CONCRETE BEDDING & BLOCKING	S4 - 6
S4-16	OIL/WATER SEPARATOR	S4 - 6
S4-17	GREASE INTERCEPTOR	S4 - 6
S4-18	COMMERCIAL CLEAN-OUT WITH TEST SAMPLING TEE	S4 - 7
S4-19	BACKWATER VALVE	S4 - 7
S4-20	MECHANICAL SEWER PLUG FOR LAKELINE CLEAN-OUT	S4 – 7

S4-21 BARRIER FENCE ..... S4 - 8

S4-22 GRAVEL ..... S4 - 8

S4-23 STEEL CASING ..... S4 - 9

S4-24 CASING SPACER ..... S4 - 9

S4-25 CONTROLLED DENSITY FILL ..... S4 - 11

S4-26 NEOPRENE FOAM PAD ..... S4 - 11

CHAPTER S4 - SEWER MATERIALS

S4-01 GENERAL

All materials shall be new and undamaged. The same manufacturer of each item shall be used throughout the work.

Where reference is made to other specifications, it shall be the latest revision at the time of construction, except as noted on the plans or herein.

All materials not specifically referenced shall comply with applicable sections of ASTM, AWWA or the APWA/WSDOT Standard Specifications.

Approved manufacturers and model numbers of various materials are listed in Approved Materials List, Appendix S-4. When specific manufacturers or models are listed, no substitutions will be allowed without prior approval by the Utility.

S4-02 GRAVITY SEWER PIPE & FITTINGS

4" to 15" Diameter PVC Pipe:

All PVC pipe and fittings shall be integral wall bell and spigot, rubber gasket joint, unplasticized PolyVinyl chloride (PVC) pipe. All PVC pipe shall have a minimum "pipe stiffness" of 46 psi at 5 percent deflection at 73 degrees F when tested in accordance with ASTM Designation D-2412, external loading properties of plastic pipe; and a minimum impact strength based on ASTM D-3034 at 73 degrees F using a 20 pound Tup A.

All PVC sewer pipe and fittings manufacture and installation shall meet or exceed the ASTM recommended specifications D-3034, SDR 35, unless otherwise specified, and all installation shall be in strict compliance with the manufacturer's directions. All pipe shall be clearly marked with the date of manufacture. All pipe shall be provided with a reference mark for proper spigot insertion. Joint gaskets shall be fabricated from a compound of which the basic polymer shall be a synthetic rubber consisting of styrene, butadiene, polyisoprene or any combination thereof and shall meet the requirements of ASTM D-3212.

18" to 27" Diameter PVC Pipe:

All PVC pipe and fittings shall be integral wall bell and spigot, rubber gasket joint, unplasticized PolyVinyl chloride (PVC) pipe. All PVC pipe shall have a minimum "pipe stiffness" of 46 psi at 5 percent deflection at 73 degrees F when tested in accordance with ASTM Designation D-2412, external loading properties of plastic pipe; and a minimum impact strength based on ASTM F-679 at 73 degrees F using a 30-pound or 20-pound Tup B.

All PVC sewer pipe and fittings manufacture and installation shall meet or exceed the ASTM recommended specifications F-679 for thickness class T-1, unless otherwise specified, and all installations shall be in strict compliance with the manufacturer's directions. All pipe shall be clearly marked with the date of manufacture. There shall be no reduction in pipe wall thickness at the bell as a result of bell formation. All pipe shall be provided with a reference mark for proper spigot insertion. Joint gaskets shall be fabricated from a compound of which the basic polymer shall be a synthetic rubber consisting of styrene, butadiene, polyisoprene or any combination thereof and shall meet the requirements of ASTM D-3212.

AWWA C-900 PVC Pipe:

Where indicated on the plans, gravity sewer pipe shall be manufactured in accordance with AWWA Standard C-900, with the following additional requirements or exceptions.

4" through 12" nominal diameter PVC pipe shall be furnished in cast iron pipe equivalent outside diameters.

C-900 PVC pipe shall be pressure class 150 (DR 18) unless otherwise called for in the plan. Pipe joints shall be manufactured using an integral bell with an elastomeric gasket push-on type joint. Elastomeric gaskets shall conform to ASTM F-477. All fittings shall be PVC, compatible with C-900 PVC pipe class called for in the plan, unless otherwise approved. PVC fittings shall conform to AWWA C-900 with respect to joint dimensions and physical properties.

S4-03 PRESSURE SEWER PIPE

PVC pressure pipe shall conform to AWWA C-900 pressure class 100 (DR 25) unless otherwise called for in the plan. Joints shall be made up as recommended by the pipe manufacturer for pressure pipe.

PVC fittings compatible with AWWA C-900 pipe, or ductile iron fittings, when allowed, shall conform to these specifications.

S4-04 HDPE PIPE

Butt-fused welded HDPE pipe shall be considered by the City on a case-by-case basis under the following conditions:

A. HDPE pipe is only used for transmission lines with no laterals.

B. HDPE pipe is used for buried piping only.

C. The use of HDPE pipe is reserved for situations in which conventional PVC sewer
pipe may not be appropriate: non-linear alignments, low-head siphons, steep slopes in sensitive/protected areas, etc.

S4-05 ABS PIPE & FITTINGS

A.B.S. composite pipe shall conform with the provisions of ASTM D-2680, Type S.C. joints (solvent welded).

S4-06 FITTINGS

All fittings shall be of the same material as the pipe unless otherwise specified. For side sewers, a tee shall be installed in pipelines 8 inches or larger (or 6 inch main lines running between manholes) with 6 inch inside diameter side outlet. On 6 inch side sewer lines, wyes shall be used.

For side sewer connections to existing sewer lines, a flexible metallic side sewer saddle shall be used for hole-cuts (supplied by the Utility). If any other type of fitting is required, the type and make shall be specified on the plans.

S4-07 CAPS AND PLUGS

All open ends shall be sealed with a plug or cap and gasket material approved by the Utility. The plug or cap shall be able to withstand all test pressures without leakage.

S4-08 BOLTS IN PIPING

Bolts shall be malleable iron, Cor-ten, or stainless steel.

Bolts and nuts for flanged pipe and fittings shall conform in size and length with ANSI/AWWA C115/A21.15. T-bolts shall be malleable iron Cor-ten in accordance with ANSI/AWWA C111/A21.11. Stainless steel bolts shall meet the requirements of ASTM A-307, Grade A. Shackle rods, nuts and washers shall be hot-dipped galvanized in accordance with AASHTO M-232 and coated thoroughly with asphaltic material.

Stainless steel nuts, bolts and washers shall be type 304.

S4-09 FLANGE GASKETS

Gasket Material shall be neoprene, Buna N. chlorinated butyl, or cloth inserted rubber.

S4-10 GATE VALVE

The minimum requirements for all gate valves, 2" to 12", shall, in design, material and workmanship, conform to the Standards of AWWA C-509.

Buried gate valves shall be iron body, bronze mounted, resilient seat, non-rising stem, suitable for installation with the type and class of pipe being installed. Ends to be as specified.

Operating stems equipped with standard two (2) inch operation nut, and O-ring stem seals. Valves not buried shall be as specified.

S4-11 VALVE BOX

Valve Box shall be cast iron, two-piece, 8" or 18" slip type top section with flange located within 3" of top with 24" bottom section (and extension, if required), equal to RICH-Seattle Type. Valve box lid shall be cast iron, 3 " deep, with recessed lifting handle, and the word “SEWER” or “SS” cast into it.

Valve box paving risers shall be cast iron suitable for H-20 traffic loading. The riser shall have four lugs or a flange around the perimeter, and be sized to fit into a RICH-Seattle Type valve box top.

Valve box adjusting sleeves (for use in unimproved areas) shall be cast iron, 12" long.

All castings shall be coated with asphaltic varnish.

S4-12 VALVE OPERATING NUT EXTENSION

Use where valves are installed more than 3' below finished grade. Extensions are to be a minimum of 1' with only one extension per valve. See Water Standard Detail.

S4-13 MANHOLES

Manholes shall be precast concrete sections with a confined O-ring rubber gasket joints per ASTM C-478 and ASTM C-443 with either a precast base or a cast-in-place base made from a 3,000 psi structural concrete.
Galvanized safety steps shall be fabricated of minimum size No. 8 (1") deformed bar conforming

to ASTM A-615, intermediate or standard grade hot-bent and galvanized after bending. Galvanizing shall conform to ASTM A-123.

Polypropylene safety steps shall be constructed from polypropylene, conforming to ASTM D-4101, injection molded around a 1/2" diameter grade 60 steel reinforcing bar conforming to ASTM A-615. The polypropylene step shall be either cast-in-place or driven into pre-formed holes in the manhole wall. The step shall be capable of resisting pullout forces exceeding 1,500 pounds.

Steps and ladders dimensions shall conform to the Standard Detail. Steps shall project uniformly from the inside wall of the manhole. Steps shall be installed to form a continuous vertical ladder with rungs equally spaced at 12" centers. Steps in precast base may be cast in place safety steps, or prefabricated galvanized hanging ladder per Standard Detail fabricated with #8 (1") reinforcing bar and #7 smooth steel bar conforming with ASTM A-615, Grade 40, galvanizing conforming with ASTM A-123.

Concrete adjustment rings shall conform to the ASTM C-32, Grade MA.

Mortar used shall be composed of one part cement to two parts of plaster sand.

Outside drop structures shall be constructed with AWWA C-900 pipe and fittings, DR 18. Inside drop structures shall be constructed of ASTM D-3034, SDR 35 PVC pipe and fittings.

As an alternate to steel reinforcement, 48-inch diameter x 3-foot high eccentric or concentric cone sections may be reinforced with synthetic fiber. The synthetic fiber shall meet the requirement of ASTM C-1116 Type III. The synthetic fiber shall be added at a rate of 0.75 pounds per cubic yard of concrete and shall be thoroughly mixed with the concrete before placement in the forms. The synthetic fibers shall be a minimum of 0.75 inches and a maximum of 2 inches in length. A minimum of two (2) hoops of W2 wire shall be placed in the 48-inch end of each cone. No steel is required in the remainder of the cone.

S4-14 MANHOLE RING & COVER

Ductile iron and cast iron rings and covers shall conform to the standard details and Section 9-05.15 of the standard specifications, as modified herein.

Casting shall conform to the requirements of ASTM A-536, Grade 80-55-06 for ductile iron and ASTM A-48, Class 30 for cast iron, and shall be free of porosity, shrinkage cavities, cold shuts, or cracks, or any surface defects which would impair serviceability. Repair of defects by welding or by the use of smooth-on or similar material will not be permitted.

Manhole rings and covers shall be machine-finished or ground-on seating surfaces so as to assure non-rocking fit in any position and interchangeability. At the request of the City, there shall be made available at the foundry standard rings and standard covers for use by inspectors in testing fit and seating.

When bolt-locking covers are required, the locking bolts shall be 5/8" - 11 NC stainless steel type 304 socket (allen) head bolts, 2 inches long.

At the request of the Engineer, there shall be made available at the foundry a testing device suitable for proving the capacity of the assembly to resist an uplift pressure on the lid equal to 20 feet of head.

S4-15 CONCRETE BEDDING & BLOCKING

Bedding, blocking, or encasement concrete shall be mixed from materials acceptable to the Engineer and shall have a 30-day compressive strength of not less than 2,500 psi. The mix shall contain five (5) sacks of cement per cubic yard and shall be of such consistency that the slump is between 1 inch and 5 inches. All concrete shall be mechanically mixed.

S4-16 OIL/WATER SEPARATOR

Oil/Water separator vaults shall be of precast concrete construction.

Cement concrete shall have a minimum 28-day compressive strength of 4500 pounds per square inch.

Deformed bars for steel reinforcement shall be in accordance with ASTM A-615, grade 60. Welded-wire fabric reinforcement shall be in accordance with ASTM A-185, grade 65. All interior piping shall be PVC sized to match side sewer line size. Baffles and weir shall be 1/2-inch thick steel plates galvanized in accordance with ASTM A-123. Vault cover shall include one (1) 24 inch square diamond plate access door and two (2) 12 inch square diamond plate inspection covers centered over outlet tee and inlet. Cover shall be designed for AASHTO H-20 load. See the Standard Details for vault sizes and miscellaneous details.

S4-17 GREASE INTERCEPTOR

Grease Interceptor Vaults shall be of precast concrete construction. Cement concrete shall have a minimum 28-day compressive strength of 4500 pounds per square inch.

Deformed bars for steel reinforcement shall be in accordance with ASTM A-615, grade 60. Welded-wire fabric reinforcement shall be in accordance with ASTM A-185, grade 65. All interior piping shall be PVC sized to match side sewer line size.

Interior baffle shall be precast reinforced concrete, 4 inches thick. Concrete baffle shall be secured in place by slotted vault walls or with stainless steel angels as shown in the Standard Detail.

Vault cover shall include 24-inch diameter bolt-locking manhole covers and frames located over inspection tees. Manhole covers shall not allow passage of air or gases. Vault cover shall be designed for AASHTO H-20 load with 30% impact factor. See the Standard Details for vault sizes and miscellaneous details.

S4-18 COMMERCIAL CLEAN-OUT WITH TEST SAMPLING TEE

Commercial clean-out and sampling tee shall consist of PVC pipe and fittings configured as shown in the Standard Detail. Clean-out access shall consist of a cast-iron material imbedded in 3000 psi concrete as shown in the Standard Detail. Sampling tee enclosure shall be a meter box as specified in the Standard Detail.

S4-19 BACKWATER VALVE

Backwater check valve installed on 4” to 8” diameter side sewers shall be rubber flapper swing type check valve. Flapper shall be constructed from steel reinforced rubber with 45-durometer standard rubber hardness. Valve seat shall be at 45° angle to direction of flow. Flow area through valve shall equal full pipe area. Valve body shall be cast iron with flanged ends and bolted over to allow removal of flapper without removing valve from line.

Backwater valve shall be housed in 48 inch diameter precast concrete valve chamber with a 48-inch by 24-inch concentric reducing cone, or plastic meter boxes, depending on depth. 24-inch frame and cover shall be marked “sewer”. See Standard Detail.

S4-20 MECHANICAL SEWER PLUG FOR LAKE LINE CLEAN-OUT

Mechanical sewer plugs for lake line side sewer clean-outs located below the hydraulic gradient shall be designed to withstand uplift pressure from force main.

Mechanical plug shall consist of aluminum body with double tapered rubber ring. Plug shall be engaged by mechanical compression of rubber ring against pipe walls.

Plug shall include integral handle allowing manual operation of the plug. Rubber ring shall be engaged or disengaged by twisting handle.

S4-21 BARRIER FENCE

Barrier Mesh shall be manufactured from Low Density Polyethylene, stabilized against U.V. degradation, and with a special selection of pigments to ensure optimum visual performance under harsh weather conditions.

Barrier Mesh shall be corrosion-free and resistant to salt water and most chemicals.

Barrier Mesh shall present a visual target area of approximately 0.5 square meter per square meter of mesh.

S4-22 GRAVEL

A. Bedding gravel shall consist of either clean sand/gravel mixture as specified in Section 9-03.12(3) "Gravel Backfill for Pipe Zone Bedding" of the Standard Specifications, or crushed surfacing, top course, as specified in Section 9-03.9(3) "Crushed Surfacing" of the Standard Specifications.

B. Foundation gravel shall be as specified in Section 9-03.9(1) "Ballast" of the Standard Specifications.

C. Select Trench Backfill shall be as specified in Section 9-03.12(3) "Gravel Backfill for Pipe Bedding" of the Standard Specifications.

D. Crushed surfacing shall be as specified in Section 9-03.9(3) "Crushed Surfacing" of the Standard Specifications.

E. Common borrow shall be provided by the Contractor from an approved borrow site, and shall consist of a natural low plasticity material, free from large cobbles, excess moisture, lumps of clay, wood pieces and shall be suitable and satisfactory material for the construction embankments, subgrade, ditches or shoulder and other facilities.

F. Use of recycled concrete for crushed surfacing base course (1 1/4" minus) material is encouraged; provided that it is not used as a final surface finish.

   Recycled concrete shall meet the requirements for crushed surfacing base course material set forth in Section 9-03.9(3) "Crushed Surfacing" of the Standard Specifications.

Manufacturers recovering concrete from sources other than concrete roadways, sidewalks, and slabs shall provide certification that the material supplied is free of contaminants.

Use of recycled concrete for crushed surfacing top course material (5/8" minus) is not allowed.

S4-23 STEEL CASING

Steel casing shall be black steel pipe conforming to ASTM A-53.

Casing wall thickness shall be 0.250 inch for casings 24 inches or less in diameter and 0.375 inch for casings over 24 inches in diameter.

Carrier pipe for sewage shall be PVC (SDR 35).

S4-24 CASING SPACER

Casing spacers shall be installed in casings over 10 feet long. Where casing spacers are not used, the carrier pipe shall be more than 10 feet in length (no pipe joints inside casing).

Casing spacer shell shall be manufactured in two pieces from heavy gauge T-304 stainless steel or 14 gauge hot rolled pickled steel joined with ribbed flanges. The shell shall be lined with a PVC liner 0.090 inch thick with 85-90 durometer.

Carbon steel casing spacer shell and risers shall be coated with a heat fused PolyVinyl chloride coating, or hot-dip galvanized.

PolyVinyl Chloride Coating Specifications:

Durometer - Shore A2 (10 Sec.) (ASTM D-1706-61T)	-	80
Max. operating temperature (constant)	-	150˚(65˚C)
Electrical properties (ASTM D-149-61)		
(short time .010")	-	1380 V/Mil
Resistance:		
Salt spray (ASTM B-117)	-	Excellent
Acids	-	Good
Alkalies	-	Good

All nuts and bolts shall be 18-8 stainless steel.

Runners shall be supported by risers made from heavy gauge T-304 stainless steel or 12 gauge hot rolled pickled steel.

Runners shall be ultra high molecular weight polymer with high resistance to abrasion and sliding wear.

TYPICAL DATA			
PROPERTY	**ASTM METHOD**	**UNITS**	**VALUE**
Specific Gravity	D-792	gm/cc	.934
Tensile Strength (Break)	D-638	PSI	3500
Elongation (Break)	D-638	%	380
Izod Impact	D-256	Ft.Lbs./in. of notch	No break
Hardness	D-2240	Shore D	67
Coefficient of Friction	D-1894	-	0.11 - 0.13
Heat Distortion Temp. 66 PSI	D-648	C	88
Coefficient of Thermal	D-696	F-1	5.5 x 10-5
ABRASION CHARACTERISTICS			
Taber Abrasion	D-1044	Mg/loss	N
Sand Slurry *			7

* Sand slurry condition - 7 hours in one part sand/ one part water slurry at 1725 RPM. Carbon steel - 100, Hifax - 15. The lower the value, the more resistant to abrasion.

Casing spacers shall be "center positioning" type. Height of risers and runners combined shall be sufficient to keep the carrier pipe bell, couplings, or fittings at least 0.75" from the casing pipe wall at all times and provide at least 1" clearance between runners and top of casing wall, to prevent jamming during installation.

S4-25 CONTROLLED DENSITY FILL

Controlled density fill (CDF, aka flowable fill) shall be a mixture of Portland Cement, admixture (optional), FlyAsh, aggregates and water. It shall be proportioned to provide a gouty, non-segregating, free flowing, self-consolidating and excavatable material that will result in a non-settling fill which has measurable unconfined compressive strength.

Materials testing shall be with unconfined compressive test cylinders. Test data may be either laboratory trail batch test data or field test data. Alternate mix designs may be required at the Engineer's discretion. The unconfined compressive strength at 28 days shall be a minimum of 50 psi and a maximum of 100 psi. Material shall be a sand/grout slurry proportioned to be hand-excavatable after long term strength gain.

Materials shall meet the requirements of the following sections of the Standard Specifications:

Portland Cement	9-01
Fine Aggregate for Portland Cement Concrete	9-03.1(2)
Admixture for Concrete	9-23.6
Fly Ash	9-23.9
Water	9-25

Controlled density fill shall meet the following requirements:

Controlled Density Fill

Ingredients	Amount per Cu. Yd.
Portland Cement	50 lb.
Aggregates Class 1 or 2	3300 lb.
Air Entrainment Admixture	Per Manufacturer's recommendations
Fly Ash Class F	300 lb.
Water	300 lb. (maximum)

The material consistency shall be flowable (approx. slump 3-10 inches). If requested by the Contractor, the proportions may be adjusted with the approval of the Engineer.

S4-26 NEOPRENE FOAM PAD

Where approved by the City, a neoprene foam pad may be used for cushion between adjacent pipes which are not meeting minimum vertical clearance requirements. The approved material is the Dow Plastics Ethafoam^{tm} 220, or an approved equal meeting the same ASTM requirements.

CHAPTER S5 - SEWER METHODS OF CONSTRUCTION

TABLE OF CONTENTS

S5-01	GENERAL CONSTRUCTION REQUIREMENTS	S5 - 1
S5-02	GRADE ESTABLISHMENT	S5 - 1
S5-03	MANHOLE EXCAVATION	S5 - 2
S5-04	PIPE LAYING	S5 - 2
S5-05	ALIGNMENT TOLERANCE	S5 - 3
S5-06	JOINTS	S5 - 3
S5-07	PRESSURE SEWER MAINS AND VALVES	S5 - 4
S5-08	PIPE BEDDING	S5 - 5
S5-09	SIDE SEWERS	S5 - 5
S5-10	MANHOLES	S5 - 6
S5-11	CONNECTION TO EXISTING MANHOLE	S5 - 7
S5-12	CLEANING & FLUSHING	S5 - 8
S5-13	TESTING OF GRAVITY SEWERS	S5 - 9
S5-14	TELEVISION INSPECTION	S5 - 12
S5-15	TESTING OF PRESSURE SEWER MAINS	S5 - 12
S5-16	OIL/WATER SEPARATOR	S5 - 12
S5-17	GREASE INTERCEPTOR	S5 - 13
S5-18	COMMERCIAL CLEAN-OUT WITH TEST SAMPLING TEE	S5 - 14
S5-19	BACKWATER VALVE	S5 - 14
S5-20	LAKE LINE CLEAN-OUT	S5 - 14

S5-21 PRECONSTRUCTION PHOTOS FOR CITY CONTRACTS ..... S5 - 15

S5-22 UNDERGROUND UTILITIES ..... S5 - 15

S5-23 CONSTRUCTION ON EASEMENTS ..... S5 - 16

S5-24 DUST CONTROL ..... S5 - 16

S5-25 BARRIER FENCE ..... S5 - 16

S5-26 TRENCH EXCAVATION ..... S5 - 16

S5-27 TRENCHLESS EXCAVATION ..... S5 - 17

S5-28 SHEETING & SHORING ..... S5 - 18

S5-29 TRENCH DEWATERING ..... S5 - 18

S5-30 TRENCH BACKFILL AND COMPACTION ..... S5 - 18

S5-31 ADJUST EXISTING STRUCTURE TO GRADE ..... S5 - 20

S5-32 ABANDONING FACILITIES ..... S5 - 21

S5-33 LAWN REMOVAL AND REPLACEMENT ..... S5 - 21

S5-34 BORING UNDER ROOTS ..... S5 - 22

S5-35 HIGHWAY AND RAILWAY CROSSINGS ..... S5 - 22

S5-36 BORING AND JACKING STEEL CASING ..... S5 - 22

S5-37 WORKING WITH ASBESTOS CEMENT PIPE ..... S5 - 23

S5-38 ASBESTOS CEMENT WATERMAIN CROSSINGS ..... S5 - 23

S5-39 CONTROLLED DENSITY FILL ..... S5 - 23

S5-40 CLEARANCES/OTHER UTILITIES ..... S5 - 24

CHAPTER S5 - SEWER METHODS OF CONSTRUCTION

S5-01 GENERAL CONSTRUCTION REQUIREMENTS

The improvements shall be constructed as shown on the plans and in accordance with these Standards, Standard Details, and Standard Specifications. Manufacturer's equipment shall be installed in compliance with specifications of the manufacturer, except where a higher quality of workmanship is required by the plans and specifications. All materials and work shall be in strict accordance with any applicable regulations of the State, County and local authorities. The Contractor shall arrange for such inspection by these agencies as may be required and shall submit evidence of their approval, if requested by the Engineer.

S5-01.1 Alignment & Staking

All work done under a Project shall be to the lines shown on the plans, or to approved revisions.

S5-01.2 Inspections & Tests

A. The Engineer shall, at all times, have access to the work for the purpose of inspecting and testing, and the Contractor shall provide proper facilities for such access and such inspection and testing.

B. If any work is covered up without approval or consent of the Engineer, it must, if required by the Engineer, be uncovered for inspection.

C. Before a performance test is to be observed by the Engineer, the Contractor shall make whatever preliminary tests are necessary to assure that the material and/or equipment are in accordance with the plans and specifications.

D. Written notice of deficiencies, adequately describing the same, shall be given to the Contractor upon completion of each inspection and the Contractor shall correct such deficiencies within seven days of the notice and before final inspection will be made by the Engineer, unless otherwise approved.

S5-02 GRADE ESTABLISHMENT

Sewer grades shall be established by means of laser beam, grade boards, lines, poles, plumb bobs or other means approved by the Engineer. The grades shall be checked at periodic intervals as directed by the engineer.

If the contractor chooses to use the conventional use of grade boards, lines, poles and plumb bobs, the grades shall be carried by means of taut grade wire supported on firmly set batter

boards at intervals of not more than 30 feet. No fewer than 4 batter boards set from grade hubs shall be used at one time.

Grade shall be constantly checked and, in the event that batter boards do not line up, work shall be stopped until the situation is corrected.

The distance from the grade wire to the invert of the sewer shall be measured by a pole, which shall be a straight-grained, planed pole, fitted with an iron shoe extending at least 8 inches from the pole at the lower end and clearly marked at intervals of 1 foot. A plumb bob shall be used to check the line of the pipe. Both grade and line shall be checked for each length of pipe laid, except at tunnels or through jacked casings where adequate methods shall be used to carry forward the line and grade.

If the contractor chooses to use a laser beam, the equipment and methods shall meet the approval of the engineer. Laser beam alignment and grade shall, at a minimum, be verified at a point 50 feet from the laser by use of a grade board.

The Contractor shall replace all monuments, right-of-way markers, property stakes, etc., that are removed or disturbed, to the satisfaction of the Engineer.

S5-03 MANHOLE EXCAVATION

Excavation for precast manholes shall be sufficient to provide a minimum of 12 inches between the manhole and the side of the excavation. The excavation shall be kept free from water until jointing has been completed. Surface water shall be diverted so as not to enter the excavation. The contractor shall maintain sufficient pumping equipment on the job to insure that these provisions are carried out.

S5-04 PIPE LAYING

Pipe laying shall be in accordance with the following:

Each pipe shall be laid with bells upgrade with the invert of the pipe to the alignment and grade shown on the plans. Care shall be exercised to insure close concentric joints and a smooth invert. Open ends of pipe and fittings shall be temporarily blocked and covered when laying is not in progress.

Water shall not be allowed in the trench during the pipe laying, joint making, and as long thereafter as is necessary, in the judgement of the Engineer, for the type of joint being used.

Existing sewage flow shall be diverted away from the segment being worked on by method approved by the Engineer.

Adjustment to the line and grade shall be done by scraping away or filling in and tamping material under the body of the pipe. Adjustment to the line and grade by wedging and blocking shall not be permitted.

The pipe shall be lowered into the trench by means of ropes, tripod, crane or any other suitable means. The pipe shall not be dropped or handled roughly. The pipe shall be checked for cracks and defects prior to use and any defective pipe rejected.

Tees, wyes, and standing services shall be installed as shown on the Standard Details and at such locations as are shown on the plans or as otherwise directed by the Engineer. These items shall not be covered until the Engineer has recorded their exact location.

Pipe laying shall start from the lowest point unless otherwise approved by the Engineer.

Slip lining shall be performed as per recommended procedure by manufacturer, as per details and as approved by the Engineer.

Pipe shall not be located below soil nails. If the pipe is located above a soil nail, a minimum of 5' clearance is required.

S5-05 ALIGNMENT TOLERANCE

The maximum tolerance from true line and grade shall be as follows:

Maximum deviation from established line and grade shall not be greater than one thirty-second (1/32) inch per inch or pipe diameter and not to exceed one-half (1/2) inch.

No adverse grade in any pipe length will be permitted.

The difference in deviation from true line and grade between any two successive joints shall not exceed 1/3 of the amounts specified above.

S5-06 JOINTS

Joint material shall be used in accordance with the recommendations of the manufacturer. Pipe handling after the gasket has been affixed shall be carefully controlled to avoid bumping the gasket and, thus knocking it out of position or contaminating it with dirt or other foreign material. Any gasket so disturbed shall be removed, cleaned, re-lubricated and replaced.

Care shall be taken to properly align the pipe before joints are forced home. During insertion of

the tongue or spigot, the pipe shall be partially supported by hand, sling, or crane as required to minimize lateral pressure on the gasket and to maintain concentricity until the gasket is properly positioned. Pipe deflection and straightening shall be held to a very minimum once the joint is home to prevent creep of the joint.

Sufficient pressure shall be applied in making the joint to assure that the joint is home as defined in the standard installation instructions provided by the pipe manufacturer. Sufficient restraint shall be applied to the line to assure the joints once home are held so by tamping fill material under and alongside the pipe or otherwise. At the end of the day's work, the last pipe shall be blocked in such a manner as may be required to prevent creep during down time.

S5-07 PRESSURE SEWER MAINS AND VALVES

S5-07.1 Pressure Main Installation

Pressure pipe as specified on the plans shall be installed as recommended by the pipe manufacturer. Pressure sewer mains shall be laid so that no high point exists except at the discharge manhole or an air release assembly.

S5-07.2 Valve Installation

Before installation, valves shall be cleaned of all foreign material. Such blocking as the Engineer may deem necessary shall be provided. The valve and valve box shall be set plumb with the valve box centered on the valve. Valves shall be opened and shut under pressure to check operation without leakage. Where valve operating nut is more than three feet below finished grade, a stem extension conforming to the Water Standard Detail must be installed.

The top of the valve box base section shall be located a minimum of 6" and maximum of 9" below finished grade. A polyethylene sheet, 8-mils thick, shall be placed between the top and base valve box sections to prevent metal to metal contact where the sections overlap.

Valve box top sections shall be adjusted flush with the finished pavement and, in those areas to be excavated for future roadway grades, enough adjustment shall be provided in the valve box to allow the top of the box to be adjusted to the required grade.

S5-07.3 Valve Box Marker Installation

Concrete marker posts shall be painted with two coats Rust-Oleum No. 2766 Hi-Gloss white paint. The marker shall be set on a line through the valve at right angles to the centerline of the road. The marker shall generally be set on the property line unless the Engineer decides another location is safer or more conspicuous. Distance to the valves shall be nearly stenciled on the post with 2-inch numerals. Valve markers shall be

installed only in unimproved or unpaved areas.

S5-08 PIPE BEDDING

Pipe shall be placed on a prepared subgrade of imported material at least 4 inches deep below the barrel of the pipe and filled around the pipe to the spring line for rigid pipe, or to six inches above crown for all flexible pipe, as shown in the Standard Detail. The imported material shall be bedding gravel. After preparation of the subgrade, bell holes shall be excavated so the pipe, when laid, will have a uniform bearing under the full length of the pipe. The Contractor shall be responsible for adequate support and bedding for the pipe. The trench shall be hand backfilled and compacted as shown in the Standard Detail. The material shall be placed in four inch layers and compacted to no less than 95 percent of the maximum theoretical density per Section 2-03.3(14)D, "Compaction and Moisture Control Tests", of the Standard Specifications, prior to placement of the next layer.

Where the undisturbed trench below the four inch bedding is unstable, the unstable materials shall be removed and backfilled with foundation gravel and/or bedding gravel as necessary to produce a stable foundation upon which to place the bedding. The Contractor shall be responsible for providing a stable foundation for placing of the bedding.

Boulders, rocks, and other obstructions (except roots of existing trees to be saved) shall be entirely removed or cut out the full width of the trench and to a depth six inches below the pipe bottom and backfilled as provided above.

Whenever the trench is excavated below the depth required for proper bedding, it shall be backfilled with bedding gravel and compacted, as provided above for bedding gravel.

Use Concrete Encasement in accordance with the Standard Detail only upon direction of the Engineer.

Where sand is encountered at the bottom of the trench imported bedding material may not be required, at the discretion of the Engineer.

S5-09 SIDE SEWERS

Side sewer locations as shown on the plan are approximate only.

All existing services shall be maintained during construction.

All existing side sewers shall be reconnected or replaced immediately after the trunk is laid. When replacing an existing trunk, side sewers shall be reconnected after the main is tested, when feasible.

Where applicable, all specifications contained herein for sewer materials and construction shall be held to apply to side sewers. Invert of the side sewer at the end of the stub shall be as shown on the plan or as directed by the Engineer.

Ends of the side sewer stubs shall be marked with a 2 x 4 stake, 12 feet long, with one end buried at the depth of the stub-end invert and extending vertically out of the ground. The portion of the stake above ground shall be painted white and marked with the word "SEWER", the depth from pipe invert to ground surface, and the distance from the main to the end of the stub. An 8-gauge wire shall attach the end of the capped stub to the 2 x 4 stake, at or above finished ground. See Standard Detail for side sewer stubs.

Slope of side sewers shall not exceed one hundred percent (100%) and shall not be less than two percent (2%). All side sewers shall be capped.

Where change in slope is greater than two inches per foot, standard 1/8 bends shall be used.

S5-10 MANHOLES

Manholes shall be constructed as shown in the Standard Details for standard manholes and drop manholes. Manholes shall be of precast reinforced concrete. Manhole ring and covers shall be adjusted to the elevation required by the Engineer prior to final acceptance of the work.

The manhole base slab shall be placed on firm soil. If the foundation material is inadequate, the Contractor shall use foundation gravel or bedding concrete under the normal base to support the manhole.

Manholes in easements shall be constructed to provide a stable, level grade for a minimum radius of 2.5 feet around the center of the access opening.

Manhole sections shall be placed and aligned so as to provide vertical sides and vertical alignment of the ladder steps. The completed manhole shall be rigid, true to dimension, and be watertight. Rough, uneven surfaces will not be permitted.

Where work is located in public right-of-way, not less than 10 inches (6 inch ring with 4 inches of riser section) nor more than 24 inches (6 inch ring with 18 inches of riser section) shall be provided between the top of the cone or slab and the top of the manhole frame.

The outside and inside of manhole adjusting bricks and the joints of any non-gasketed precast concrete sections shall be thoroughly wetted and completely filled with mortar, plastered and troweled smooth with 3/4 inch of mortar in order to attain a watertight surface. Mortar shall be placed between each level of adjusting bricks, riser rings, top of cone section, and bottom of iron ring.

All lift holes, if any, on precast items shall be completely filled with expanding mortar, smoothed both inside and out, to insure water-tightness. All steel loops, if any, on precast section must be removed and flush with the manhole wall. The stubs shall be covered with mortar and smoothed. Rough, uneven surfaces will not be permitted.

Channels shall be made to conform accurately to the sewer grade and shall be brought together smoothly with well-rounded junction, satisfactory to the Engineer. The channels shall be field poured after the inlet and outlet pipes have been laid and firmly grouted into place at the proper elevation. Allowances shall be made for a minimum of one-tenth foot (0.1') drop in elevation across the manhole in the direction of flow. The maximum allowable drop in invert elevation across the manhole in the direction of flow shall be 1.0 feet. Channel sides shall be carried up vertically from the invert to the largest diameter of the various pipes. The concrete shelf shall be warped evenly and sloped 1" per foot to drain. Rough, uneven surfaces will not be permitted. Channels shall be constructed to allow the installation and use of a mechanical plug of the appropriate size. Prefabricated manhole bases with glass fiber supported plastic or PVC hard lined channels will be allowed at the Contractor's option.

All manholes located in unpaved areas shall include a concrete collar around the manhole adjusting bricks per Standard Detail, see MANHOLE ADJUSTMENT SECTION DETAIL (UNPAVED AREAS). In unimproved easement areas, the manhole shall also have a bolt-locking lid.

All rigid pipe entering or leaving the manhole shall be provided with flexible joints within twelve inches (12") of the manhole structure and shall be placed on firmly compacted bedding. Special care shall be taken to see that the openings through which pipes enter the structure are completely and firmly filled with mortar from the outside to ensure water-tightness. All PVC pipe connections to manholes shall be made with gasketed coupling as approved by the Utility.

S5-11 CONNECTION TO EXISTING MANHOLE

Connection to existing manhole shall be accomplished in such a manner that all existing services are maintained, that no refuse, broken brick, concrete or other extraneous matter enter into the existing sewer. The outfall shall be plugged or screened throughout the contractors operation at the Engineer's option.

A circular opening shall be carefully core drilled in the manhole barrel on the proper alignment so that the new sewer will be in line with the center of the manhole, and at the height which will allow the new sewer to be placed at the proper grade. The opening shall be of such size as to provide clearance of not less than one (1) or more than three (3) inches between the outside of the pipe and the manhole wall. Pipe connections, channel forming, grouting of pipe and backfilling shall be as specified previously for standard manholes.

No additional pipe shall be connected until final set of the grout has occurred. When additional pipe is connected, care shall be taken to avoid shocks or other undue strains to the grouted pipe.

Any opening resulting from removal of existing pipe shall be filled with mortar to provide a watertight seal, unless new pipe is to be reconnected to that opening.

When any new sewer is connected to an existing manhole with an inside drop structure, the minimum angle between drop piping and existing access steps shall be 90º (1/4 of manhole circumference), or 45º for 6" pipe. Where minimum clearance cannot be met, the cone section shall be rotated and steps relocated to provide maximum possible clearance from drop tee and pipe. Cut existing steps flush with manhole wall and cover stubs with mortar to provide a smooth finish.

When any new sewer is connected to an existing manhole, the manhole shall be reconstructed to conform to current standards.

Upward adjustments of old, existing manholes must be done with all new parts including cone section so there is only one mismatched seam. The mismatched seam shall be reinforced with a concrete collar poured around the seam, 6-inches to 12-inches above and below the seam line, around the outside of the manhole, minimum 6-inches thick. The collar may also be sealed with the Wrapid Seal^{tm} (or equivalent) manhole encapsulation system.

In addition, where the new manhole barrel section key is not compatible with the existing barrel section key, the new section key shall be broken off as shown in sanitary sewer Standard Detail, “Manhole Section Adjustment”.

S5-12 CLEANING & FLUSHING

Prior to pipe testing, all pipes shall be cleaned in the following manner:

The Contractor shall furnish an inflatable rubber ball of a size that will inflate to fit snugly into the pipe to be tested. The ball may, at the option of the Contractor, be used without a tag line; or a rope or cord may be fastened to the ball to enable the Contractor to know and control its position at all times. The ball shall be placed in the last cleanout or manhole on the pipe to be cleaned and water shall be introduced behind it. The ball shall pass through the pipe with only the force of the water impelling it. All debris flushed out ahead of the ball shall be removed at the first manhole where its presence is noted. In the event cemented or wedged debris or damaged pipe stops the ball, the Contractor shall remove the obstruction.

S5-13 TESTING OF GRAVITY SEWERS

Method of testing gravity sewers shall be at the option of the Contractor unless otherwise specified herein.

S5-13.1 Water Test

Tests for water tightness shall be made by the Contractor in the presence of the Engineer. A test shall be made every section of the sewer, including the side sewers, after completion of backfill. Where the groundwater table is so high as to preclude a proper exfiltration test, an infiltration test may be used.
The exfiltration test shall be made by plugging the inlets of the lower manhole and filling the test section with water to a height of six (6) feet above the crown of the sewer at the upper end of the sewer being tested.

In no case shall the static level be less than six (6) feet above the water table at the upper end of the sewer being tested. Where the static pressure on the lower manhole would exceed 20 feet, the Contractor may test the sewer between manholes in two or more sections. The Contractor may provide for sectional testing by installing tees in the main line. The tees shall be of a type that permit plugging of both the upper and lower run of the tee. The required static water head may be obtained by installing vertical lengths of pipe in the tee or from the upper end of the sewer pipe being tested at shallow manholes.

The Contractor shall provide a groundwater observation well at each manhole for determining the level of the groundwater during the test. The observation well shall consist of one inch plastic pipe installed vertically adjacent to the manhole. The lower end of the test well shall be placed in a one (1) cubic yard pocket of wash gravel and shall be at the same elevation as the invert of the manhole. The upper end of the test well shall be a maximum of two (2) feet below the finished grade elevation and shall be plugged and exposed until completion of the test.

The time of exfiltration tests shall be a minimum of one (1) hour. The leakage during the test shall not exceed the following allowances:

Allowable Leakage - Exfiltration or Infiltration

Allowable Leakage in gal\100 linear feet\hr. Head above Crown on Lower End of Test Section.

Pipe	6 Ft.	8 Ft.	10 Ft.	12 Ft.	14 Ft.	16 Ft.
6	0.6	0.7	0.7	0.8	0.8	0.9
8	0.8	0.9	1.0	1.0	1.1	1.2
10	1.0	1.1	1.2	1.3	1.4	1.5
12	1.2	1.3	1.4	1.6	1.7	1.8
15	1.5	1.7	1.8	2.0	2.1	2.3
18	1.8	2.0	2.2	2.3	2.5	2.7
24	2.4	2.6	2.9	3.1	3.4	3.6

Repair by chemical grouting will not be allowed.

For static head above the basic eight feet at the crown of the sewer at the lower end of the test section, the allowable leakage shown above shall be increased at a ratio of 5 percent per foot increase.

Where the groundwater exceeds a height of six feet above the crown of the sewer at the upper end of the test section, the section shall be tested by infiltration. The infiltration test shall be conducted by placing a plug in the inlet sewer at the upper manhole and inserting an approved measuring device in the inlet sewer at the lower manhole. Prior to making measurements, care shall be taken to assure that the flow over or through the measuring device is constant. A minimum of four measurements shall be made over a period of one hour.

The acceptance water test shall be made after backfilling has been completed and compacted, and ATB has been placed in areas to be paved.

S5-13.2 Air Testing

The Contractor may use a low-pressure air test at his option. The following procedures shall be used on conducting the low-pressure air test. The Contractor shall furnish all facilities and personnel for conducting the test under the observation of the Engineer. The equipment and personnel shall be subject to the approval of the Engineer.

The Contractor may desire to make an air test prior to backfilling for his own purposes. However, the acceptance air test shall be made after backfilling has been completed and compacted, and ATB has been placed in areas to be paved.

All wyes, tees, or end of side sewer stubs shall be plugged with flexible joint caps, or acceptable alternate, securely fastened to withstand the internal test pressures. Such plugs or caps shall be readily removable and their removal shall provide a socket suitable for making a flexible jointed lateral connection or extension. No double plugs shall be allowed.

Immediately following the pipe cleaning, the pipe installation shall be tested with low-pressure air. Air shall be slowly supplied to the plugged pipe installation until the internal air pressure reaches 4.0 pounds per square inch greater than the average back pressure of any groundwater that may submerge the pipe. At least two minutes shall be allowed for temperature stabilization before proceeding further.

The requirements of this specification shall be considered satisfied if the time required in seconds for the pressure to decrease from 3.5 to 2.5 pounds per square inch greater than the average back pressure of any groundwater is at least as follows:

Size of Pipe	Seconds per Lineal foot of Pipe
4 inch	0.11
6 inch	0.25
8 inch	0.46
10 inch	0.72
12 inch	1.04
15 inch	1.63
18 inch	2.35
21 inch	3.20
24 inch	4.18

The use of air pressure for testing sewer lines creates hazards that must be recognized. The Contractor shall be certain that all plugs are securely blocked to prevent blowouts. An air supply regulator shall be installed on the air supply line to the sewer that shall permit a maximum of 10 psi in the line to be tested. All pressure shall be relieved from the sewer section being tested prior to removal of test plugs.

S5-13.3 Deflection Test for Flexible Pipe

Sanitary sewers constructed of flexible pipe shall be deflection tested not less than 30 days after the trench backfill and compaction has been completed, and ATB

has been placed in areas to be paved.

The test shall be conducted by pulling a solid pointed mandrel with a circular cross section with diameter equal to 95% of the inside pipe diameter through the completed pipeline. Minimum length of circular portion shall be equal to the diameter of the pipe. Pull shall be manual without mechanical assistance and the mandrel shall negotiate deflected section freely.

Testing shall be conducted on a manhole to manhole basis and shall be done after the line has been completely flushed out with water.

Contractor shall locate and repair any sections failing to pass the test and to retest the section.

S5-14 TELEVISION INSPECTION

The Developer shall provide the Utility with a videotape inspection of all sanitary sewers prior to final project acceptance.

If defects are found or suspected during the one-year warranty period, the Utility may also require that the Developer provide videotape inspection of any or all sanitary sewers before expiration of the warranty.

The Contractor shall correct all deficiencies found during television inspection.

S5-15 TESTING OF PRESSURE SEWER MAINS

Prior to acceptance of the project, the pressure line shall be subjected to a hydrostatic pressure test of 100 psi at the high point of the line. Any leaks or imperfections developing or occurring under the test pressure shall be remedied by the Contractor before final acceptance of the project. Leakage shall be measured by approved means. Test pressure shall be maintained while the entire installation is inspected. The Contractor shall provide all necessary equipment and shall perform all work connected with the tests. Insofar as is practical, test shall be made with pipe joints and fittings exposed for inspection. Maximum allowable leakage shall be .05 gallons per hour per inch of pipe diameter per 100 feet of pipe.

S5-16 OIL/WATER SEPARATOR

Oil/water separators shall be constructed as shown in the Standard Details. Excavation for pre-cast vault shall be sufficient to provide a minimum of 12 inches between the vault and the side of the excavation. Vault shall be placed at proper depth to set vault cover flush with finish grade. If additional depth of cover is required over inlet or outlet piping vault riser sections shall be

installed to raise vault cover a maximum of 24 inches.

The oil/water separator shall be placed on firm soil. If the foundation material is inadequate, the Contractor shall use foundation gravel or bedding concrete under the normal base to support the separator.

Vault shall be placed and set plumb so as to provide vertical sides. The completed separator shall be rigid and watertight.

Joints of precast concrete sections shall be thoroughly wetted and completely filled with mortar, plastered and troweled smooth with 3/4" of mortar in order to attain a watertight surface.

All lift holes, if any, on precast items shall be completely filled with expanding mortar and smoothed both inside and out, to insure water-tightness. All steel loops, if any, on precast section must be removed, flush with the vault wall. The stubs shall be covered with mortar and smoothed. Rough, uneven surfaces will not be permitted. Precast vault shall be provided with 8 inch diameter knockouts at all pipe openings or have openings core-drilled prior to installation.

All rigid pipe entering or leaving the structure shall be provided with flexible joints within twelve inches (12") of the manhole structure and shall be placed on firmly compacted bedding. Special care shall be taken to see that the openings through which pipes enter the structure are completely and firmly filled with mortar from the outside to ensure water-tightness. All PVC pipe connections to vault shall be made with gasketed coupling as approved by the Utility.

S5-17 GREASE INTERCEPTOR

Grease interceptors shall be constructed as shown in the Standard Details. Excavation for precast vault shall be sufficient to provide a minimum of 12 inches (12") between the vault and the side of the excavation.

24 inch (24") diameter manhole frame and cover shall be adjusted to the elevation required by the Engineer prior to final acceptance of the work. Adjusting rings shall be manufactured from precast reinforced concrete. Total height of rings shall be from 8 inches (8") minimum to 20 inches (20") maximum.

The grease interceptor shall be placed on firm soil. If the foundation material is inadequate, the Contractor shall use foundation gravel or bedding concrete under the normal base to support the interceptor.

Vault shall be placed and set plumb so as to provide vertical sides. The completed interceptor shall be rigid and watertight.
The outside and inside of manhole adjusting rings, joints of precast concrete sections and the perimeter of pre-cast baffle shall be thoroughly wetted and completely filled with mortar, plastered and troweled smooth with 3/4" of mortar in order to attain a watertight surface.

All lift holes, if any, on precast items shall be completely filled with expanding mortar, smoothed both inside and out, to insure water-tightness. All steel loops, if any, on precast section must be removed, flush with the vault wall. The stubs shall be covered with mortar and smoothed. Rough, uneven surfaces will not be permitted.

Precast vault and baffle shall be provided with 8 inch (8") diameter knockouts at all pipe openings or have openings core-drilled prior to installation.

All rigid pipe entering or leaving the structure shall be provided with flexible joints within twelve inches (12") of the manhole structure and shall be placed on firmly compacted bedding. Special care shall be taken to see that the openings through which pipes enter the structure are completely and firmly filled with mortar from the outside to ensure water-tightness. All PVC pipe connections to vault and baffle shall be made with gasketed coupling as approved by the City.

S5-18 COMMERCIAL CLEAN-OUT WITH TEST SAMPLING TEE

Test sampling tees shall be placed outside the building no more than 24 inches (24") downstream of a clean-out extended to grade, enclosed in a casting or meter box as shown in the Standard Detail. The enclosure shall be supported on minimum 2-inch thick gravel base. The capped orifice shall be a maximum of 4 inches (4") from finished grade. The sampling tee shall be installed so that it opens in a direction at right angles to and vertically above the flow of the pipe. The sampling tee shall be accessible at all times for compliance determination sampling.

The clean out shall be brought to grade and provided with a cast iron ring and cover imbedded in 3000 psi cement concrete as shown in the Standard Detail.

S5-19 BACKWATER VALVE

Check valve assembly shall be installed on lake line side sewers at locations as shown on the plan or as directed by the Engineer.

Installation of the precast concrete valve chamber shall be as described in applicable portions of “Manholes” methods of construction of these technical specifications. Depth to invert of pipe entering the valve chamber shall be a maximum of 5 feet. Each flanged end of the valve shall be supported on concrete blocks as shown in the Standard Detail.

S5-20 LAKE LINE CLEAN-OUT

Where possible, lake line side sewer clean-out shall be located just above hydraulic gradient of the lake line sewer system. Clean-out location shall provide easy access for inspection and maintenance.

PVC Clean-outs located above hydraulic gradient shall be capped with PVC cap without gasket.

Clean-outs located below the hydraulic gradient shall be capped with mechanical sewer plug designed to withstand uplift pressure from force main.

6 inch diameter installations shall be enclosed in metal meter box per Standard Detail. Minimum inside dimensions shall be 11 1/2 inches by 17 1/2 inches, 10 inches deep.

8-inch diameter installations shall be enclosed in metal meter box per Standard Detail. Minimum inside dimensions shall be 16 inches by 28 5/8 inches, 12 inches deep.

The enclosure shall be supported on minimum 2-inch thick gravel base.

S5-21 PRECONSTRUCTION PHOTOS FOR CITY CONTRACTS

Before commencing any construction work as described in the plans and specifications, the Contractor shall provide photographs of pre-existing conditions of the area that will be disturbed during construction operations.

Photographs will be obtained as follows:

1. Every 25 feet interval in easements.

2. Every 50 feet interval in paved areas.

3. And any other location as directed by the Engineer.

The photographs shall be taken with a 35mm camera, developed in 5" x 7" color prints, contained in albums, catalogued, and cross-referenced.

S5-22 UNDERGROUND UTILITIES

The plans show the approximate locations of various existing utilities known to the engineer, such as gas lines, water mains, storm drainage, power lines, telephone lines, television cables, and other obstructions based on information obtained from various sources. This information is not guaranteed to be accurate, and the Contractor is directed to check for interferences and obstructions by inquiry from the different utilities and by underground exploration ahead of his regular excavation.

The Contractor shall request field locates and notify the owners of underground facilities about the scheduled commencement of excavation through a one-call number (1-800-424-5555).

If the Utility is not included in the one-number locator service, notice shall be provided

individually to those owners of underground facilities known to or suspected of having underground facilities within the area of proposed excavation.

Notice shall be made to owners of underground utilities not less than two (2) business days or more than ten (10) business days prior to scheduled date of commencement of excavation.

The Contractor shall excavate around and under service pipes with special care and shall support and maintain them in service. Where it is necessary to cut, move or reconnect any service lines, arrangements shall be made with the respective utility.

S5-23 CONSTRUCTION ON EASEMENTS

All work on easements shall be performed strictly in accordance with easement provisions. Easements shall be restored equal to or better than original condition. The Contractor shall do no work on easement areas until specifically authorized by the Engineer.

S5-24 DUST CONTROL

The Contractor shall sprinkle water as necessary to keep the dust down. This sprinkling shall be maintained until the project is accepted. Sprinkling shall be kept to a minimum and shall not produce runoff from the site. On paved streets, if dust becomes a nuisance when backfilling is completed, the Contractor shall vacuum sweep the portions of streets being used for traffic. Flushing of streets shall not be permitted without prior City approval.

S5-25 BARRIER FENCE

Where indicated on the Plans, a bright orange safety fence shall be placed parallel to the silt fence, 2 feet nearer to the construction activity. Minimum fence material height shall be 2 feet. Top of fence shall be located 3 feet above ground.

The barrier fence shall be supported as recommended by the manufacturer and as directed by the Engineer.

S5-26 TRENCH EXCAVATION

Before commencement of trenching, provide mini-gabions for all downhill storm drain catch basins, per City of Bellevue standard for temporary sediment trap at curb inlet. Plastic sheeting must be available on-site. In case of rain, any stockpiled material must be covered and secured.

Clearing and grubbing limits may be established by the Engineer for certain areas and the Contractor shall confine his operations within those limits. Debris resulting from the clearing and grubbing shall be disposed of by the Contractor.

Trenches shall be excavated to the line and grade designated by the Engineer and in accordance with the Standard Details. Trenches shall comply with OSHA and WISHA requirements regarding worker safety. The trench width at the top of the pipe shall be 30 inches for pipe up to and including 12 inch inside diameter and the outside diameter of the pipe barrel plus 16 inches for pipe larger than 12 inch inside diameter. Where higher strength pipe or special bedding is required because of excess trench width, it shall be furnished.

The trench shall be kept free from water until joining has been completed. Surface water shall be diverted so as not to enter the trench. The Contractor shall maintain sufficient pumping equipment on the job to insure that these provisions are carried out. The Contractor shall perform all excavation of every description and of whatever substance encountered as part of his trench excavation cost. Unsuitable material below the depth of the bedding shall be removed and replaced with satisfactory materials as determined by the Engineer.

Trenching operations shall not proceed more than 100 feet in advance of pipe laying except with written approval of the Engineer.

Providing sheeting, shoring, cribbing, cofferdams, and all aspects involved therein shall be the sole responsibility of the Contractor. Such trench/excavation protection shall comply with the requirements of Section 2-09 Structure Excavation and Section 7-08.3(1)B Shoring of the Standard Specifications, Chapter 49.17 RCW of the Washington Safety and Health Act, and Part N – Excavation, Trenching, and Shoring of Chapter 296-155 WAC.

When trenching operations take place in the public right-of-way, the pavement, and all other improvements, shall be restored as required by the Right-Of-Way Use Permit.

S5-27 TRENCHLESS EXCAVATION

The use of trenchless excavation methods such as pipe bursting and horizontal directional drilling shall be considered by the City on a case-by-case basis under the following conditions:

A. HDPE DR 26 or thicker-walled pipe required.

B. Romac 501 transition couplings (4”) are required at both ends.

C. The installed pipe must be electronically located and marked on the ground for measurement in order to draw the as-built schematics.

D. The pipe must be video-taped following installation, with water running. The tape must be provided to the Inspector to approve the installation or require corrections.

E. Pipe bursting is not allowed on private property or Right-of-Way without the appropriate permission, such as an easement or Right-of-Way use permit.

S5-28 SHEETING & SHORING

The Contractor shall provide and install sheeting and shoring as necessary to protect workmen, the work and existing utilities and other properties in compliance with OSHA and WISHA requirements. All sheeting and shoring above the pipe shall be removed prior to backfilling. Sheeting below the top of the pipe may be cut off and left in place.

All trenches and excavations more than 4 feet in depth shall be shored in compliance with applicable Federal and State regulations. Shoring shall be required in all street excavation. Sloping to the angle of repose will be permitted only in non-critical off-street areas.

Removal of the sheeting and shoring shall be accomplished in such a manner that there will be no damage to the work or to the other properties.

S5-29 TRENCH DEWATERING

When water is encountered to a degree that a successful trenching and pipe laying operation is hampered, dewatering will be the responsibility of the Contractor. Determination of the method to be used to dewater trenched areas will be the responsibility of the Contractor, but any method used must be in accordance with the specifications and requirements of the Washington State Department of Ecology and the Local Jurisdiction.

S5-30 TRENCH BACKFILL AND COMPACTION

Compaction of backfill from the bottom of the trench to six inches above the top of the pipe shall be as specified under pipe bedding. Compaction of the remainder of the backfill shall, at the minimum, meet the requirements of the Governmental Agency having final jurisdiction.

Backfill shall not be deposited in the trench in any manner which will damage or disturb the pipe or the initial backfill. Compaction of the backfill may be obtained by jetting or by tamping, rolling or otherwise, as specified by the Engineer. The Contractor shall provide the services of a testing laboratory acceptable to the Engineer to perform in place density tests to show that the specified density has been obtained. The approval of the compaction method and the achievement of the specified density shall, in no way, relieve the Contractor of responsibility for all repairs caused by settlement of the backfill prior to acceptance and during the one-year period after acceptance of the project.

Where the excavated materials has a California Bearing Ratio for compacted and soaked sample of less than seven (7) or, for other reasons, cannot be compacted as specified, the Contractor shall replace the excavated material with approved imported gravel.

Compaction of backfill material may be accomplished by mechanical tamper, by vibrating, by jetting or by a combination of these methods, as approved by the Governmental Agency having

jurisdiction and the Engineer.

Unless otherwise provided, compaction of backfill shall meet the following requirements:

Paved Areas

A. Trench restoration shall be either by a patch or overlay method as required and noted on the permit. When a patch method is used the trench limits shall be sawcut prior to the final patch.

B. All trench and pavement cuts shall be made by sawcuts. The sawcuts shall be a minimum of 1 foot (1') outside the trench width. If the permit requires an overlay then the Contractor may use a jackhammer for the cutting of the existing pavement.

C. All trenching shall be backfilled with either crushed surfacing materials conforming to Section 4-04 of the Standard Specifications pit run or suitable native material. All trench backfill materials shall be compacted to ninety-five percent (95%) maximum dry density, as determined by Section 2-03.3(14)D, "Compaction and Moisture Control Tests", of the Standard Specifications.

If the existing material is determined by the Engineer to be suitable for backfill, the Contractor may use the native material.

When the trench is perpendicular to the traveled lane or any driveways, the full depth of the trench shall be backfilled with crushed surfacing top course material. When the trench is parallel, only the top 4-feet must be backfilled with crushed surfacing top course material.

Backfill compaction shall be performed in 8 to 12 inch lifts. The Developer shall perform compaction tests in four foot (4') increments maximum. The test results shall be given to the Engineer for review and approval prior to paving. Tests shall be performed at maximum intervals of 50 feet along the length of the trench.

Unimproved Areas

In trenches through unimproved areas, pipe shall be bedded as specified. The remaining backfill shall be compacted to a minimum of ninety percent (90%) of maximum dry density, as determined by Section 2-03.3(14)D, "Compaction and Moisture Control Tests", of the Standard Specifications.

S5-31 ADJUST EXISTING STRUCTURE TO GRADE

S5-31.1 Manhole and Clean-out adjustment

Existing manholes and clean-outs affected by the overlay as shown in the Plan shall be adjusted to grade within three working days of overlay.

Adjustment of existing manholes shall be in accordance with Section 7-05.3(1) of the Standard Specifications. Clean-outs adjusted to grade shall conform to the Standard Detail.

S5-31.2 Valve Box Adjustment - Pavement Overlays and Sidewalks

A. Raising the existing valve box cover less than 2" shall be accomplished by adjusting the existing top section of the valve box.

B. Raising the existing valve box cover 2" or more, shall be accomplished by either adjusting the existing top section or be inserting a valve box paving riser into the existing valve box top. The paving riser shall be epoxied to the valve box.

C. If the valve box base section needs to be extended, the contractor shall install a 4" diameter cast iron soil pipe, with bell-end of the soil pipe inserted over the top of the existing valve box base section. The spigot-end of the soil pipe shall be located a minimum of 6" and maximum of 9" below finished grade. The valve box top section shall be slipped over the soil pipe and adjusted to final grade. A polyethylene sheet, 8-mils thick, shall be placed between the valve box and soil pipe to prevent metal to metal contact where the sections overlap.

Final box adjustment shall leave the top of the valve box no higher than final grade, and no lower than 0.5" below final grade.

In asphalt concrete pavement overlay areas, excavation of the valve box to be raised shall be accomplished by sawcutting or neat-line jackhammering the pavement a minimum of 12" around the perimeter of the valve box.

Final adjustment of valve boxes shall be made within 20 calendar days following the final overlay.

S5-31.3 Valve Box Adjustment - Unimproved Areas

Adjustment of valve box covers located outside paved areas or sidewalks can be accomplished using a 12" valve box adjusting sleeve inserted into the existing valve box top section.

S5-32 ABANDONING FACILITIES

S5-32.1 Abandoning Pipe In Place

The Contractor shall completely fill the pipeline to be abandoned with sand, concrete, or controlled density fill; or remove it.

S5-32.2 Abandoning Structures

Abandonment of structures shall be completed only after piped systems have been properly abandoned. Structures within the public right-of-way, a public easement or which are part of the publicly-owned and maintained system must be:

- ►removed completely according to Section 2-02 of the Standard Specifications; or
- ►abandoned according to Section 7-05.3(2) of the Standard Specifications, except that controlled density fill may be used in lieu of sand if desired, provided no conflicts with new utilities or improvements arise.

S5-33 LAWN REMOVAL AND REPLACEMENT

Any lawn damaged by the Contractor, outside of limits shown on the plan, shall be restored to conditions existing prior to construction. The Contractor shall take care to limit the area of disturbance.

When lawn removal and replacement is called for, a sufficient width (at least 2' wider than outside width of backhoe wheels or tracks) of lawn turf shall be removed prior to beginning excavation so that heavy equipment does not run over the lawn.

The area of the sod to be removed shall be laid out in squares or strips of such size as to provide easy handling and matching. The sod shall then be carefully cut along these lines to a depth of four (4) inches, taking care to keep cuts straight and strips of the same width. After the sod has been cut vertically, it shall be removed to a uniform depth of approximately three (3) inches with an approved type of sod cutter.

This operation shall be performed in such manner as to ensure uniform thickness of sod throughout the operation.

Prior to installation of new sod, the scalped area shall be carefully shaped to proper grade and be thoroughly compacted. Wherever the construction operations have resulted in the placement of unsuitable or poorer soils in the area to be resodded, the surface shall be left low and covered with top soil.

The finished grade, after shaping and compacting the top soil, shall be thoroughly dampened prior to and immediately before replacing the sod. The sod shall be replaced to the required

grade, taking care to butt each piece tightly against the adjacent one. Upon completion, the sod shall be dampened and rolled with a lawn roller.

All tools used shall be of the type specially designed for the work and be satisfactory to the Engineer. In no case shall sod be removed by the use of a mattock or other tools which will not meet requirements specified herein.

Sod shall be a 4-way blend of Ryegrasses as grown by J.B. SOD & SEED of Redmond, WA., or equivalent approved by the Engineer.

S5-34 BORING UNDER ROOTS

Boring under the root systems of trees (and plants) shall be accomplished by excavating a trench or pit on each side of the tree and then hand digging or pushing the pipe through the soil under the tree. The pit walls shall be a minimum of 7 feet from the center of the tree and shall be sufficient depth to lay the pipe at the grade shown on the plan and profile.

S5-35 HIGHWAY AND RAILROAD CROSSINGS

Interstate, state, or county highway and railroad crossings require the placing of steel, cast iron or concrete pipe casing by jacking or tunneling and laying the carrier pipe within the casing.

S5-36 BORING AND JACKING STEEL CASING

The Contractor shall verify the vertical and horizontal location of existing utilities. If required to avoid conflicts and maintain minimum clearances, adjustment shall be made to the grade of the casing.

The pipe shall be bored and jacked where indicated. The Contractor shall removed or penetrate all obstructions encountered. If groundwater is found to be a problem during boring operations, the Contractor shall do all that is necessary to control the flow sufficiently to protect the excavation, pipe and equipment so that the work is not impaired. Any pipe damaged during the boring and jacking operation shall be repaired by the Contractor in a manner approved by the Engineer.

Special care shall be taken during the installation of the bored and jacked pipe to insure that no settlement or caving be caused to the above surface. Any such caving caused by the placement of the pipe shall be the Contractor's responsibility and he shall repair any area so affected as directed by the Engineer.

During the jacking operations, particular care shall be exercised to prevent caving ahead of the pipe which will cause voids outside of the pipe. If voids exist, the Contractor shall drill through

the wall of the pipe and fill the voids with a pumped cement grout. All voids shall be filled to the satisfaction of the Engineer.

The carrier pipe shall be installed in the casing as shown on the drawings. Where length of the casing exceeds 10 feet, the Contractor shall support carrier pipe with casing spacers as shown in the Standard Detail. The casing pipe shall not be backfilled with sand and grout. The casing ends shall be sealed with manufactured rubber end seal device.

Boring pits shall be backfilled with select native material and compacted to 95% maximum dry density as determined by Section 2-03.3(14)D, "Compaction and Moisture Control Tests", of the Standard Specifications. The Contractor shall provide sufficient select backfill material to make up for the rejected material.

All disturbed ground shall be restored to its original condition or better.

S5-37 WORKING WITH ASBESTOS CEMENT PIPE

When working with asbestos cement pipe, the Contractor is required to maintain workers' exposure to asbestos material at or below the exposure limit as prescribed in WAC 296-62-07705 State/Federal Guidelines and Certification.

S5-38 ASBESTOS CEMENT WATERMAIN CROSSINGS

Where new utility line crosses below an existing AC main, the AC pipe shall be replaced with DI pipe to 3 feet past each side of trench as shown on the Standard Detail. Alternatively, where directed by the Engineer, the trench shall be backfilled with controlled density fill (CDF, aka flowable fill) from bottom of trench to spring line of the AC main.

S5-39 CONTROLLED DENSITY FILL

CDF can be proportioned to be flowable, non-segregating, or excavatable by hand or machine. Desired flowability shall be achieved with the following guidelines:

Low Flowability	below 6-inch slump
Normal Flowability	6 - 8-inch slump
High Flowability	8-inch slump or greater

CDF shall be placed by any reasonable means into the area to be filled.

CDF patching, mixing and placing may be started if weather conditions are favorable, when the

temperature is at 34 degrees F and rising. At the time of placement, CDF must have a temperature of at least 40 degrees F. Mixing and placing shall stop when temperature is 38 degrees F. or less and falling.

Each filling stage shall be as continuous an operation as is practicable. CDF shall not be placed on frozen ground.

Trench section to be filled with CDF shall be contained at either end of trench section by bulkhead or earth fill.

When used to support existing asbestos cement (A.C.) pipe, the flowable CDF shall be brought up uniformly to the spring line of the A.C. pipe, as shown on the plans, or as directed by the Engineer.

Contractor shall provide steel plates to span utility trenches and prevent traffic contact with CDF for at least 24 hours after placement or until CDF is compacted or hardened to prevent rutting by construction equipment or traffic.

S5-40 CLEARANCES/OTHER UTILITIES

If the minimum vertical distances between utility pipes is less than 6-inches and such installation is approved by the City, a pad shall be placed between the pipes. The pad shall be O.D. x O.D. x 2.5 inches thick minimum or as required to protect the pipes. Above O.D. is equal to the outside diameter of the larger pipe. The pad shall be a polyethylene foam plank (Dow Plastics Ethafoam^{tm} 220), or approved equal. Additional measures may be necessary to ensure system integrity and may be required as evaluated by the City on a case by case basis.

CHAPTER S6 – SIDE SEWER REGULATIONS

TABLE OF CONTENTS

S6-01 GENERAL ..... S6 - 1

S6-02 CONNECTION REQUIRED ..... S6 - 1

S6-03 SIDE SEWER CONTRACTORS LICENSE ..... S6 - 1

S6-04 SIDE SEWER PERMIT ..... S6 - 3

S6-05 HOLD HARMLESS ..... S6 - 5

S6-06 GENERAL UTILITY NOTIFICATION REQUIREMENTS ..... S6 - 5

S6-07 GENERAL CONSTRUCTION REQUIREMENTS ..... S6 - 5

S6-08 SIDE SEWER FITTINGS REQUIREMENTS ..... S6 - 7

S6-09 JOINT-USE SIDE SEWER ..... S6 - 8

S6-10 CONNECTION REQUIREMENTS ..... S6 - 9

S6-11 EXCAVATIONS ..... S6 - 9

S6-12 LAYING PIPE ..... S6 - 10

S6-13 INSPECTION AND TESTING ..... S6 - 10

S6-14 SPECIAL REQUIREMENTS ..... S6 - 11

S6-15 SIDE SEWER DEMOLITION ..... S6 - 13

S6-16 SPECIFICATIONS NOT COVERED BY THESE REGULATIONS ..... S6 - 13

CHAPTER S6 - SIDE SEWER REGULATIONS

S6-01 GENERAL

The following requirements govern side sewer construction in the Utility service area. These standards apply to sewerage facilities from the point of connection to the public sewer system (end of a side sewer stub, mainline tee, or a hole-cut into a sewer main) to the building.

S6-02 CONNECTION REQUIRED

Whenever connection to the utility system is required, the property owner shall remove any connection to a cesspool, septic tank, or other on-site wastewater disposal facilities and direct connection should be made to the utility system. Former facilities must be abandoned per King County Health Department regulations.

S6-03 SIDE SEWER CONTRACTORS LICENSE

S6-03.1 Application Requirements

To obtain a side sewer contractor's license from the Utility, an applicant must:

Possess a current Washington State Contractor's License.

Possess a current City of Bellevue business and occupation license.

Certify that he or she has read and understands the contents of this regulation.

Post a bond in the amount of $2,500.00 (two thousand five hundred dollars) for the benefit of the Utility, the City of Bellevue, and other towns, cities, or counties served by the Utility.

File with the Utility a certificate of insurance certifying that the applicant possesses public liability insurance and with a provision that such insurance may not be canceled without at least thirty days advance written notice to the Utility. Insurance requirements for side sewer contractors are listed below.

Pay all license fees required by the Utility.

S6-03.2 Insurance Requirements

The Contractor shall procure and maintain for the duration of the license insurance against claims for injuries to persons or damages to property which may arise from or in connection with the performance of the work hereunder by the Contractor, his agents, representatives, employees or subcontractors. The cost of such insurance shall be paid by the Contractor. Insurance shall meet or exceed the following unless otherwise approved by the City. Questions regarding insurance requirements can be discussed with the City's Risk Management Office.

A. Minimum Insurance

1. Commercial General Liability coverage with limits not less than $1,000,000 per occurrence / $2,000,000 annual aggregate,

2. Stop Gap/Employers Liability coverage with limits not less than $1,000,000 per accident/disease,

3. Business Automobile Liability coverage with limits not less than $1,000,000 per accident for any auto,

4. Workers' Compensation coverage as required by the Industrial Insurance Laws of the State of Washington.

B. Self-Insured Retentions

Self-insured retentions must be declared to and approved by the City.

C. Other Provisions

Commercial General Liability policies shall be endorsed to:

1. Include the City, its officials, employees and volunteers as additional insureds,
2. Provide that such insurance shall be primary as respects any insurance or self-insurance maintained by the City,
3. Each insurance policy shall provide that coverage shall not be cancelled except after thirty (30) days' written notice has been given to the City.

D. Acceptability of Insurers

Insurance shall be placed with insurers with a rating acceptable to the City.

E. Verification of Coverage

Contractor shall furnish the City with certificates of insurance required by this clause. The certificates are to be received and approved by the City before work commences. The City reserves the right to require complete, certified copies of all required insurance policies at any time.

F. Subcontractors

Contractor shall require subcontractors to provide coverage which complies with the requirements stated herein.

S6-03.3 Responsibility of Side Sewer Contractor

The licensed side sewer contractor shall be responsible for complying with all requirements of the Utility related to side sewer construction, for any and all actions or omissions of his employees, and for any damage done to existing utilities encountered during any excavation.

S6-03.4 License Revocation

A side sewer contractor's license issued by the Utility may be suspended or revoked by the Utility Director for cause.

S6-04 SIDE SEWER PERMIT

S6-04.1 Permit Application Requirements

In making application for a side sewer permit, the owner or side sewer contractor shall furnish the Utility with a drawing showing:

A. The size and location of structures on the property.

B. The full course of the proposed side sewer from the public sewer in the street to the structure. Single family residences are exempt from this requirement unless installing a joint use line.

Any street opening permits required to complete installation of a side sewer must be obtained prior to acceptance of the permit application.

A King County Wastewater capacity charge information form must accompany the application unless the sewer work is a revision and addition, or repair to an existing service.

The Applicant must show that any easements that may be required for installation of the side sewer have been obtained and recorded with King County.

All permit fees required by the Utility must be paid with the permit application.

S6-04.2 Permit Restrictions

A. No permit will be issued for side sewer connection before the public or private sewer system is accepted by the Utility.

B. No work shall be started on any private or side sewer without a permit.

C. No licensed side sewer contractor shall do any side sewer work under any other person's permit.

D. No side sewer work shall be done without approval and inspection by the Utility.

E. All side sewer permits expire twelve months after issuance.

S6-04.3 Work on Private Property

The owner is the only person authorized to install and repair side sewers on his own property other than a licensed side sewer contractor.

S6-04.4 Work on Public Property

Only a licensed side sewer contractor may be issued a permit for side sewer work in a public right-of-way.

S6-04.5 Old Side Sewers For New Buildings

When an existing structure is removed and new structure is constructed, a new permit is required, and any existing side sewer that does not meet the current requirements of the Utility shall be replaced.

S6-04.6 Other Permits Required

The issuance of a side sewer permit by the Utility shall not relieve the permit holder from the responsibility of obtaining such other permits or licenses as may be required by the Utility, the City of Bellevue, the county, or other cities or towns in whose jurisdiction the side sewer is installed.

S6-04.7 Posting Side Sewer Permit

The contractor's side sewer permit shall be available at the job and must be readily accessible to the Utility inspector. No inspection will be made unless such permit is readily available at the job site.

S6-05 HOLD HARMLESS

A. Contractor shall protect, defend, indemnify and save harmless City, its officers, employees and agents from any and all costs, claims, judgements or awards of damages, arising out of or in any way resulting from the negligent acts or omissions of Contractor, its officers, employees and agents.

B. City shall protect, defend, indemnify and save harmless Contractor, its officers, employees and agents from any and all costs, claims, judgments or awards of damages, arising out of or in any way resulting from the negligent acts or omissions of City, its officers, employees or agents.

S6-06 GENERAL UTILITY NOTIFICATION REQUIREMENTS

All side sewer cleaning contractors and/or plumbers, side sewer contractors, and owners shall notify the Utility of such operations prior to cleaning existing side sewers (as distinguished from plumbing and septic tank facilities).

S6-07 GENERAL CONSTRUCTION REQUIREMENTS

S6-07.1 General

All materials and methods of construction for side sewers shall be equal to those used for sewer mainline construction, unless otherwise listed herein.

S6-07.2 Restoration of Thoroughfares and Right-of-Ways

It shall be the responsibility of the licensed side sewer contractor to cut the road surface, dig a trench, lay the pipe, make the connection to the wye or tee, backfill the trench and restore the roadway surfacing and vegetation within the limits of any thoroughfare or right-of-way, public or private. Such work shall be performed as quickly and with as little hindrance to traffic as possible, and in strict accordance with the requirements of the Utility, City, the county, or other city or town within whose jurisdiction said thoroughfares or right-of-way is located.

S6-07.3 Inspections

After the side sewer permit is obtained, arrangements for inspection of a side sewer installation shall be made with the Utility, 24 hours in advance by the side sewer contractor. The Utility reserves the right to set the time for inspections.

An extra charge shall be made by the Utility for each visit to any person who requests any inspection after regular hours on a workday, or on a weekend or holiday. The side sewer contractor will be billed for hours beyond that included in the permit fee.

S6-07.4 Site Safety

The following requirements shall apply to safety practices to be followed by licensed side sewer contractors while performing permitted side sewer work in the utility service area:

Barricades - Before beginning excavation in a public area there shall be at the site sufficient barricades to properly protect the work. The barricades shall be illuminated during the nighttime hours with a minimum of four flares or flashing signals.

Trench Covering - All excavations or trenches within a public area or within four feet of a public area must be temporarily covered at night and during hours of work site inactivity.

Ditch Pumps - During pipe laying, a ditch pump shall be available at the site.

Shoring - The contractor shall have immediately available for use sufficient shoring to adequately protect workers where unstable ground conditions are encountered, in accordance with OSHA and WISHA requirements.

Flagger - A flagger must be posted whenever work is underway in a public thoroughfare.

S6-07.5 Site Clean-up

The side sewer contractor shall remove all debris and excess excavation and shall repair all damage, public or private, in kind immediately after backfilling.

S6-07.6 Failure to Restore Excavations

If any excavation is left open beyond a reasonable length of time, the Utility may cause the excavation to be backfilled and the public way restored. Any cost incurred in such work shall be charged to the owner or side sewer contractor in charge of such work, and shall be payable immediately to the Utility upon written notification of the amount thereof given to the contractor or posted at the location of the work.

S6-07.7 Failure to Complete Side Sewer Work

If any work done under a side sewer permit is not in accordance with provisions of the requirements of the Utility and if the contractor or person doing the work fails and/or refuses to properly construct and complete such work, notice of such failure or refusal shall be given to the owner or occupant of the property. The Utility may cause the work to be stopped. If the work, in the opinion of the Utility, constitutes a hazard to public safety, health or the public sewer, such work may be completed by the Utility. The cost of such work and any materials and administrative services necessary therefor shall be charged to the owner and/or contractor and shall be payable by the owner and/or contractor immediately upon written notice given by the Utility of the amount thereof or by posting a notice thereof on the premises.

Such cost shall constitute a civil debt owing to the City jointly and severally by the persons who have been given notice as herein provided. The debt shall be collectable in the same manner as any other civil debt owing to the City, including attachment of the contractor's side sewer bond.

S6-08 SIDE SEWER FITTINGS REQUIREMENTS

S6-08.1 Bends and Wyes

All changes of direction shall be made with bends, wye branches or a combination of wye branch and bends.

S6-08.2 Side Sewer Clean-Outs

The following specifications shall apply for all side sewer cleanouts except as provided for in Section S6-09.2 "Joint Side Sewer Clean-outs".

A. All changes of direction greater than forty-five degrees will be made with a wye branch and bends as required. Where wye branches are used, a cleanout should be included per the Standard Details.

B. A cleanout shall be required a minimum of thirty-six inches (36") from all buildings unless permission to omit or change the location of such cleanout has been received from the Utility.

C. Cleanouts, including those for commercial properties, shall be installed at locations designated by the Utility but in no case shall distance between cleanouts exceed one hundred feet.

D. A cleanout shall be the same diameter as the pipe down grade to which it connects.

E. On long runs of pipe, manholes may be installed, or be required, in lieu of cleanouts.

F. Suitable rings and covers (of a type designated by the Utility) shall be used for all cleanouts on commercial and multi-family property and such rings shall be cast in a concrete block per the Standard Details.

G. All cleanouts shall extend to the ground surface.

S6-08.3 Test Tees

A test tee shall be provided at the point of connection to the sewer main and at any other required point or points in order to insure that all portions of the side sewer or private sewer can be tested.

S6-08.4 Side Sewer Acceptance

It shall be the responsibility of the side sewer contractor to install all risers, cleanouts, casting, concrete blocks, etc., required before the installation will be approved by the Utility.

S6-09 JOINT-USE SIDE SEWER

S6-09.1 Pipe Size For Joint Side Sewers

If a side sewer serves two, three or four residential structures, six-inch pipe shall be used from the public or private sewer in the street to each wye at the confluence of the separate side sewers. Six-inch pipe shall be used when crossing a property outside the lot to be served.

S6-09.2 Joint Side Sewer Clean-Outs

A maximum of four residential structures may be connected to a single side sewer. Where three or four residential structures are connected to the same side sewer, a six-inch cleanout extending to the ground surface will be required at the wye where the upper connection is made.

S6-09.3 Joint-Use Maintenance Easement Agreement

Joint-use maintenance easement agreements are required when a property owner requires service through another property, or when two or more services are provided off of a common side sewer.

S6-10 CONNECTION REQUIREMENTS

S6-10.1 Sewer Taps

Sewer hole-cuts (6-inch minimum diameter) on 8-inch diameter and larger concrete, metallic and clay pipe shall performed by a qualified coring contractor at the Contractor's expense in the presence of the Utilities Inspector. Contact Bellevue Utilities at 425-452-6875 to schedule an inspection appointment 48 hours in advance (not including weekends and holidays). The Utilities Inspector will provide the saddle and strap in order to complete the connection to the sewer main.

Cores shall be made at the 10 o'clock or 2 o'clock positions. The pipe coupon shall be provided to the Utilities Inspector. The cored hole shall be free of lips, burrs and other defects that may catch debris. Jagged, non-circular, improperly sized and/or mis-located cores and cracked or otherwise damaged pipe sections shall require that the damaged pipe section be replaced with a PVC tee and mechanical, Romac-style couplings on concrete,
metallic and clay pipe, and rigid PVC couplings on PVC pipe. Flexible rubber couplings (e.g. Fernco and Caulder couplings) are not allowed on the sewer main or side sewer.

S6-10.2 Connecting Pipe Material

If the type of wye or tee provided in the utility system does not match the proposed side sewer pipe joint detail, a short transition piece shall be jointed to the wye branch or tee by means of a gasket of the type used in the utility system where possible. If this gasket type is not available, careful caulking with an approved caulking material made especially for that purpose may be used. The balance of the side sewer shall then be constructed with compression-type flexible gaskets up to the point of connection with the house plumbing.

S6-10.3 Tee Connections

All tee connections must be clean and visible during inspection. The first length of pipe installed at the tee shall not be more than two feet long.

S6-10.4 Connection to Plumbing

Connection to the house soil pipe shall be made by means of a flexible clamp type coupling or other approved method.

S6-11 EXCAVATIONS

S6-11.1 Measurements Furnished by the Utility

Excavations shall be made at the measurements furnished by the Utility for the location of the wye, tee, or side sewer stub.

S6-11.2 Main Sewer Check

The licensed side sewer contractor must check the depth of the main sewer at manholes on each side of wye location before starting to excavate for side sewer.

S6-11.3 Prospecting For Stub

If the wye, tee, stub, or riser is not located at the measurements as furnished, the contractor shall prospect four feet in all directions from the distance and depth given. If such prospecting fails to disclose the stub, the contractor shall immediately contact the Utility and report the circumstances. Upon receipt of such report, a Utility representative will promptly visit the site and render further assistance.

S6-12 LAYING PIPE

S6-12.1 Grade

All sewers shall be laid true to grade with the bell upgrade.

S6-12.2 Foundation Clearance

Side sewers parallel to the foundation wall of any building shall be laid not less than thirty inches therefrom.

S6-12.3 Minimum Cover for Side Sewer

In addition to minimum cover required by Chapter S3 “Sewer Planning/Design Standards”:

A. Minimum cover for side sewers crossing a ditch in the public way shall be two feet six inches.

B. On private property where less than minimum cover can be maintained, approvals may be obtained from the Utility for installing by using alternate pipe materials, see Chapter S3.

S6-13 INSPECTION AND TESTING

S6-13.1 Covering Work

No trench shall be filled nor any sewer or drain covered until the work has been inspected and approved by the Utility.

S6-13.2 Test Stubs and Branches

The side sewer contractor must test, by flushing or other means, the existing stub or branch from main to property line to see that it is in operative condition before connecting the side sewer. The contractor will accept responsibility that the existing stub or branch is open and in a usable condition when completed. If the existing stub or branch is not found open and usable, the Utility must be notified before proceeding with the connection.

S6-14 SPECIAL REQUIREMENTS

S6-14.1 Gap Drains

Where back flush of sand filters of swim pools are required to be disposed of in the sanitary sewer, a gap drain will be required. Diatomaceous earth filter backwash is not allowed to be disposed of in the sanitary sewer.

S6-14.2 Gravity Flow

In any structure in which the plumbing is too low to permit gravity flow to the utility system or private sewer, the sewage shall be lifted by artificial means and discharged into the utility system or private sewer. When only the lower floor of a structure is too low for gravity flow, the remaining floors must flow by gravity.

S6-14.3 Pumped Side Sewers

All pump installations must meet all building and plumbing codes.

S6-14.4 Lake Line Connections

See Standard Details pertaining to side sewer connections to lake lines.

All applications for lake line connections directly fronting, or removed from the lake on similar elevations, shall include finish floor elevations on a plot plan to allow the Utility to determine if the lowest finish floor elevation is above or below the maximum hydraulic gradient of the upstream pump station.

All lots fronting the lake (or adjacent lots with similar elevations) at or below the adjacent lake line hydraulic gradient, shall install package sewer pump systems.

Side sewers with a package sewer pump system shall connect to a lake line with a six (6) inch pipe to a six (6) inch "Side Sewer Clean-out for Lake Line Connections" followed by a six (6) inch by force main-size reducer. The private force main shall include a check valve and a shut-off gate valve.

When the lowest finished floor elevation is over two feet (2') above the maximum hydraulic gradient of the upstream pump station, the dwelling shall connect to a lake line with a six (6) inch pipe to a six (6) inch "Clean-out for Lake Line Connections" followed by a standard gravity side sewer to the dwelling. When the lowest finished floor elevation is two feet (2') or less above the maximum hydraulic gradient of the upstream pump station, the dwelling shall also be protected by installation of a "Check Valve Assembly for Joint-Use Side Sewer".

All joint-use side sewers shall connect to a lake line with a "Side Sewer Clean-Out for Lake Line Connections" located near the point of connection as shown on the Standard Details. A separate "Check Valve Assembly for Joint-Use Side Sewer" shall be installed for each lot connecting to the joint-use side sewer when:

A. that lot shares a joint-use side sewer with a lot that is required to pump into the joint-use line, or

B. the lowest finished floor elevation on that lot is two feet (2') or less above the maximum hydraulic gradient of the upstream pump station.

All pump systems, check valves, clean outs, and pipe located outside the public easement or right-of-way shall be owned and maintained by the property owner.

S6-14.5 Backwater Valves

Wherever a situation exists involving an unusual danger of backup, such as any structure where the plumbing drain is two feet (2') or less above the hydraulic gradient of a lake line, or below the rim of the next upstream manhole, a backwater valve and a holding tank may be required per the International Plumbing Code. The effective operation of the backwater sewage valve shall be the responsibility of the owner of the side sewer. Before any installation of this nature is made, the owner will be required to comply with provisions of this regulation concerning the agreement to hold the Utility and the City harmless from damage or injury.

S6-14.6 Sampling Manholes

When required by the Utility or King County Wastewater, the property owner shall install and maintain, at their expense, a manhole in the side sewer to facilitate observation,

sampling, and measurement of the wastes therein. Such a manhole shall be located, if feasible, where it is accessible and safely entered from a public street. It shall be constructed and installed in accordance with plans approved by the Utility and shall be arranged so that flow measuring and sampling equipment and a shutoff gate or a screen may be conveniently installed.

S6-15 SIDE SEWER DEMOLITION

Any property owner who plans to demolish or remove any structure connected to the public sewer system shall notify the utility and complete a utility abandonment form prior to the commencement of such work.

Side sewer demolition shall be performed prior to removal of building foundation. The side sewer for each building shall be excavated and removed from the house connection to the property line or the main as specified by the Utility. The Contractor shall cap the end of the side sewer to remain in place. Side sewer demolition shall be performed in the presence of the City of Bellevue Sewer Maintenance Engineering Technician (inspector). The inspector will inspect the stub to determine whether the side sewer can be re-used. If the inspector determines that the side sewer cannot be re-used, the property owner shall either abandon the side sewer or upgrade the portion of side sewer on private property through a side sewer permit or through a sewer system extension agreement. The City will be responsible for repair or replacement of the portion of the side sewer located within public rights-of-way and public easements.

When a property is redeveloped, the property owner shall abandon side sewers that are no longer needed. In addition, the property owner shall abandon all unused provisional side sewers within the scope of the redevelopment project. The allowable methods of side sewer abandonment are as follows:

- Cap the side sewer at the main.
- Install a cured-in-place liner inside the side sewer and fill side sewer pipe to be abandoned with controlled density fill. In addition, install a cured-in-place spot repair liner in the mainline to cover the side sewer opening. The spot repair liner shall extend a minimum of one foot upstream and downstream of the edge of the side sewer opening.
- Other trenchless technology proposed by the property owner, subject to City review and approval.
- For single-family sites, the City may allow the property owner to cap the side sewer at the edge of right-of-way. To be approved on a case by case basis.

S6-16 SPECIFICATIONS NOT COVERED BY THESE REGULATIONS

In the event a construction or installation specification relating to side sewers is not covered by this regulation, the Utility may require compliance with other manuals or standards as it sees fit.

APPENDIX

TABLE OF CONENTS

APPENDIX S-1
SANITARY SEWER STANDARD DETAILS ..... A(S1 - 1)

APPENDIX S-2
DRAFTING STANDARDS ..... A(S2 - 1)

APPENDIX S-3
SAMPLE TITLE BLOCK ..... A(S3 - 1)

APPENDIX S-4
SEWER APPROVED MATERIALS LIST..... A(S4 - 1)

APPENDIX S-1

SANITARY SEWER STANDARD DETAILS

1. STANDARD MANHOLE ..... S - 1
2. MANHOLE TYPE 2 ..... S - 2
3. MANHOLE TYPE 3 ..... S - 3
4. OUTSIDE DROP STRUCTURE ..... S - 4
5. INSIDE DROP STRUCTURE ..... S - 5
6. STANDARD MANHOLE UNDER 5 FEET DEEP ..... S - 6
7. NEW MANHOLE ON EXISTING SEWER ..... S - 7
8. MANHOLE RING ADJUSTMENT DETAIL ..... S - 8
9. MANHOLE SECTION ADJUSTMENT ..... S - 9
10. SEWER MANHOLE ADJUSTMENT (CONCENTRIC TO ECCENTRIC CONE) ..... S - 10
11. 24" MANHOLE RING AND COVER ..... S - 11
12. 24" BOLT-LOCKING MANHOLE RING AND COVER ..... S - 12
13. LADDER AND MANHOLE STEP ..... S - 13
14. TYPICAL TRENCH DETAIL ..... S - 14
15. PIPE BEDDING ..... S - 15
16. CLEANOUT ..... S - 16
17. SIDE SEWER STUBS ..... S - 17
18. HOUSE SEWER CONNECTION ..... S - 18
19. SOIL/CEMENT PIPE ANCHOR ..... S - 19
20. PIPE STAKE ANCHOR ASSEMBLY ..... S - 20

21. SIDE SEWER RELOCATION ..... S - 21

22. TIMBER BAFFLE/HILL HOLDER ..... S - 22

23. LAKE LINE CLEANOUT AND CHECK VALVE ASSEMBLY INSTALLATION ..... S - 23

24. LAKE LINE CLEANOUT AND CHECK VALVE ASSEMBLY INSTALLATION AT OR BELOW HYDRAULIC GRADIENT ..... S - 24

25. SIDE SEWER CLEANOUT FOR LAKE LINE CONNECTIONS ..... S - 25

26. CHECK VALVE ASSEMBLY FOR JOINT USE SIDE SEWER (4" TO 8" DIAMETER) ..... S - 26

27. SAMPLING TEE ..... S - 27

28. 100 GALLON BAFFLE TYPE OIL/WATER SEPARATOR ..... S - 28

29. 450 GALLON BAFFLE TYPE OIL/WATER SEPARATOR ..... S - 29

30. 800 & 1000 GALLON BAFFLE TYPE OIL/WATER SEPARATOR ..... S - 30

31. GREASE INTERCEPTOR ..... S - 31

32. UNCOVERED PAVED VEHICLE SERVICE AREA DRAINAGE DETAIL ..... S - 32

33. CASING INSTALLATION ..... S - 33

34. SINGLE HOME SEWER PUMP SYSTEM ..... S - 34

35. PROJECT SIGN DETAIL ..... S - 35

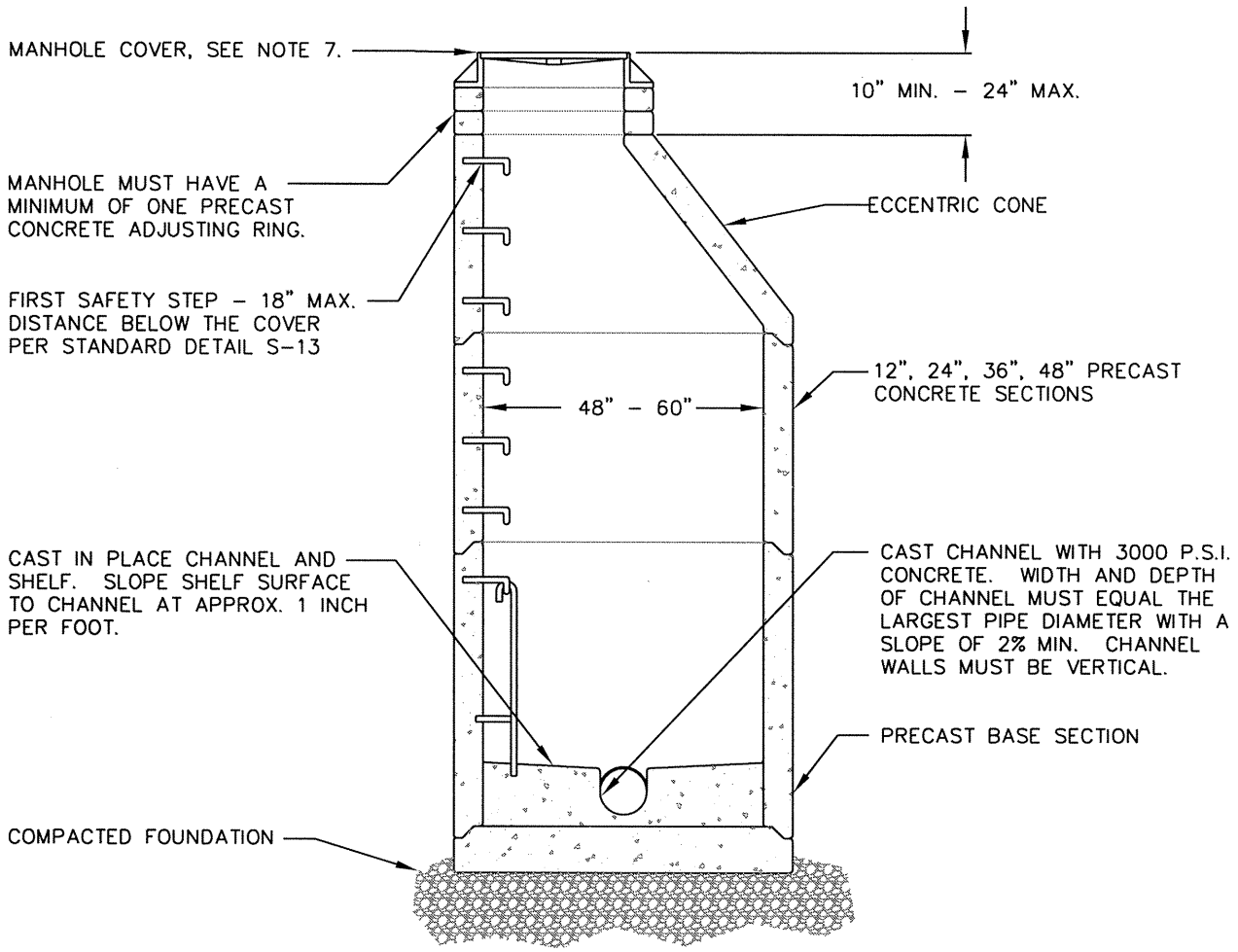

GENERAL NOTES – APPLIES TO ALL MANHOLES:

1. PRECAST SECTIONS SHALL BE REINFORCED PER ASTM SPECS FOR CORRESPONDING SEWER PIPE.
2. GALVANIZED OR PLASTIC SAFETY STEPS SHALL BE PER STANDARD DETAIL S–13.
3. SAFETY STEPS IN PRECAST BASE SECTION MAY BE CAST IN PLACE OR A PREFABRICATED LADDER GROUTED OR BOLTED IN PLACE. SEE STANDARD DETAIL S–13.
4. ALL HOLES FOR PIPE SHALL BE BLOCKED OUT AT THE TIME OF CASTING THE SECTION.
5. ALL RUBBER GASKETED MANHOLE SECTIONS SHALL BE FURNISHED WITH RUBBER GASKET JOINT PER ASTM C–478 AND ASTM C–443.
6. MANHOLES OVER 10' DEEP SHALL BE FURNISHED WITH A MIN. WALL THICKNESS OF 5".
7. MANHOLE RING AND COVER SPECS, SEE STANDARD DETAILS S–11 AND S–12 (BOLT–LOCKING COVER).
8. MANHOLE DIAMETER IN ACCORDANCE WITH CITY OF BELLEVUE ENGINEERING STANDARDS.
9. WHERE AWWA C900 PVC PIPE IS USED, CONNECTION SHALL BE MADE WITH PVC MANHOLE ADAPTER SIZED FOR THE O.D. OF AWWA C900 PVC PIPE. ADAPTER LENGTH SHALL MATCH OR EXCEED THE MANHOLE SECTION WALL THICKNESS.
10. MORTAR SHALL BE PLACED BETWEEN EACH LEVEL OF THE ADJUSTING RINGS, INCLUDING THE TOP OF THE CONE SECTION AND THE BOTTOM OF THE IRON RING.
11. GROUT ALL JOINTS INSIDE, OUTSIDE AND IN BETWEEN TO ACHIEVE WATERTIGHT CONSTRUCTION. FINISH SMOOTH THE INSIDE OF STRUCTURE. USE NON–SHRINK GROUT ONLY.
12. MANHOLES IN EASEMENTS SHALL BE CONSTRUCTED TO PROVIDE A STABLE, LEVEL GRADE FOR A MIN. RADIUS OF 2.5' FROM THE CENTER OF THE COVER. SEE STANDARD DETAIL S–8.
13. WHERE STANDARD MANHOLE CANNOT BE INSTALLED, THE CUSTOM MANHOLE SHALL BE DETAILED ON THE CONSTRUCTION PLANS.
14. PIPE CONNECTION TO MANHOLE: KOR–N–SEAL OR EQUAL FOR CORE–DRILLED SECTIONS, OR SAND COLLAR FOR SECTIONS WITH KNOCKOUTS.

City of Bellevue

SEWER UTILITIES

TITLE

STANDARD MANHOLE

JANUARY 2008

NO SCALE

NO. S–1

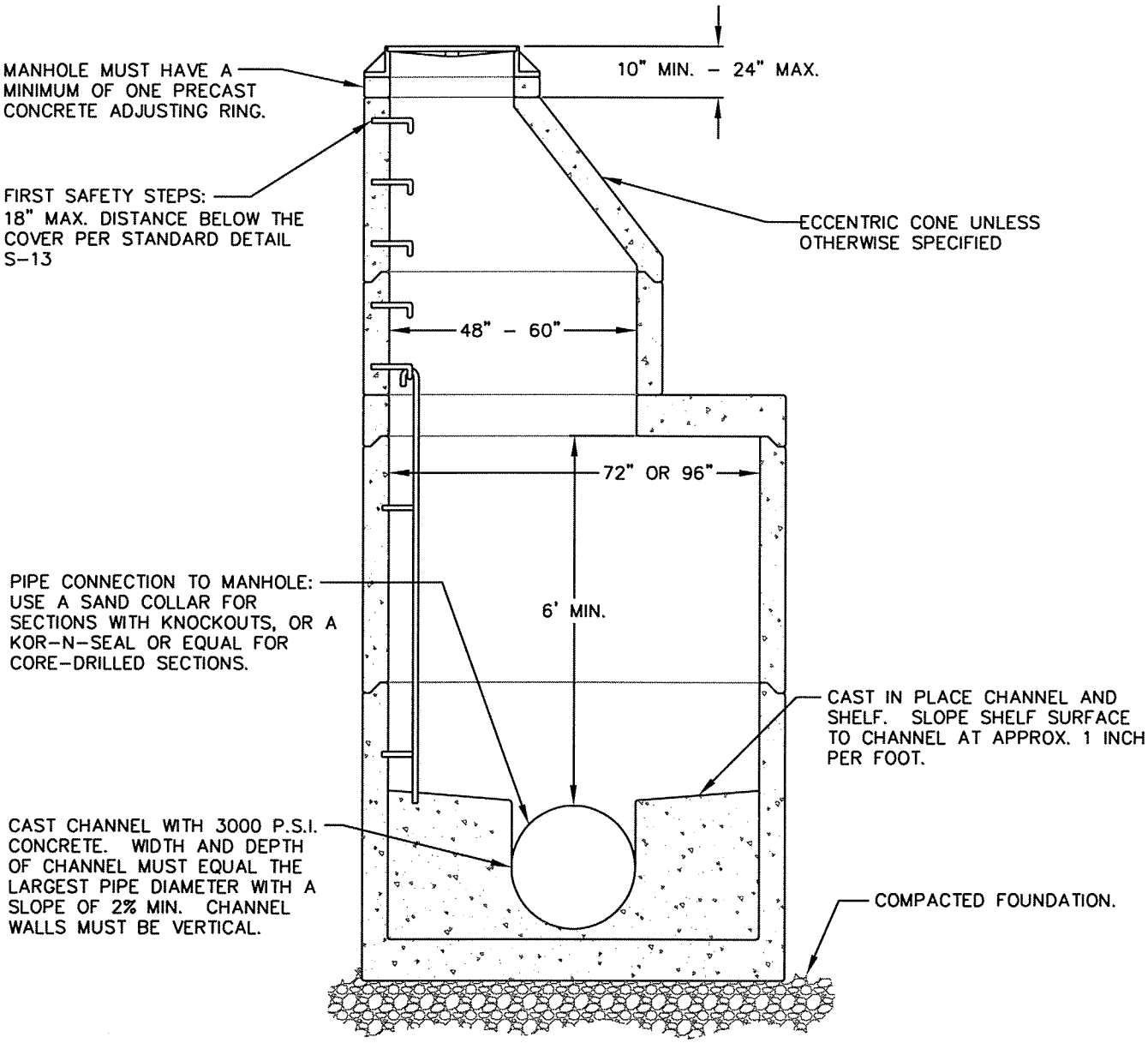

NOTES:

1. MANHOLE SHALL CONFORM TO THE GENERAL NOTES AND ALL APPLICABLE REQUIREMENTS OF STANDARD DETAIL S-1.
2. MANHOLES SHALL BE CONSTRUCTED IN ACCORDANCE WITH ASTM C-478 UNLESS OTHERWISE SHOWN ON PLANS OR NOTED IN THE STANDARD SPECIFICATIONS.
3. PRECAST BASES SHALL BE FURNISHED WITH KNOCKOUTS. KNOCKOUTS SHALL HAVE WALL THICKNESS OF 2" MINIMUM. UNUSED KNOCKOUTS DO NOT NEED TO BE GROUTED IF LEFT IN INTACT. PIPE SHALL BE INSTALLED ONLY IN FACTORY KNOCKOUTS UNLESS CORE-DRILLED HOLES ARE APPROVED BY THE CITY.
4. KNOCKOUT OR CORE-DRILLED HOLES SHALL EQUAL THE PIPE OUTSIDE DIAMETER PLUS MANHOLE WALL THINKNESS. MAXIMUM HOLE SIZE DIAMETER SHALL BE 60" FOR 72" MANHOLE AND 84" FOR 96" MANHOLE. MINIMUM DISTANCE BETWEEN HOLES SHALL BE 12".
5. MINIMUM OF 6 FOOT SEPARATION BETWEEN THE PIPE CROWN TOP SLAB OR CONE SECTION.
6. FOR HEIGHTS OF 12' OR LESS, MINIMUM SOIL BEARING VALUE SHALL EQUAL 3,300 POUNDS PER SQUARE FOOT. FOR HEIGHTS OVER 12', MINIMUM SOIL BEARING VALUE SHALL EQUAL 3,800 POUNDS PER SQUARE FOOT.
7. FOR JOINT REQUIREMENTS, SEE WSDOT STANDARD SPECIFICATION SECTION 7-05.3.
8. GROUT ALL JOINTS INSIDE, OUTSIDE AND IN BETWEEN TO ACHIEVE WATERTIGHT CONSTRUCTION. FINISH SMOOTH THE INSIDE OF STRUCTURE. USE NON-SHRINK GROUT ONLY.

City of Bellevue

SEWER UTILITIES

TITLE

TYPE 2 MANHOLE
72" AND 96"

JANUARY 2008

NO SCALE

NO. S-2

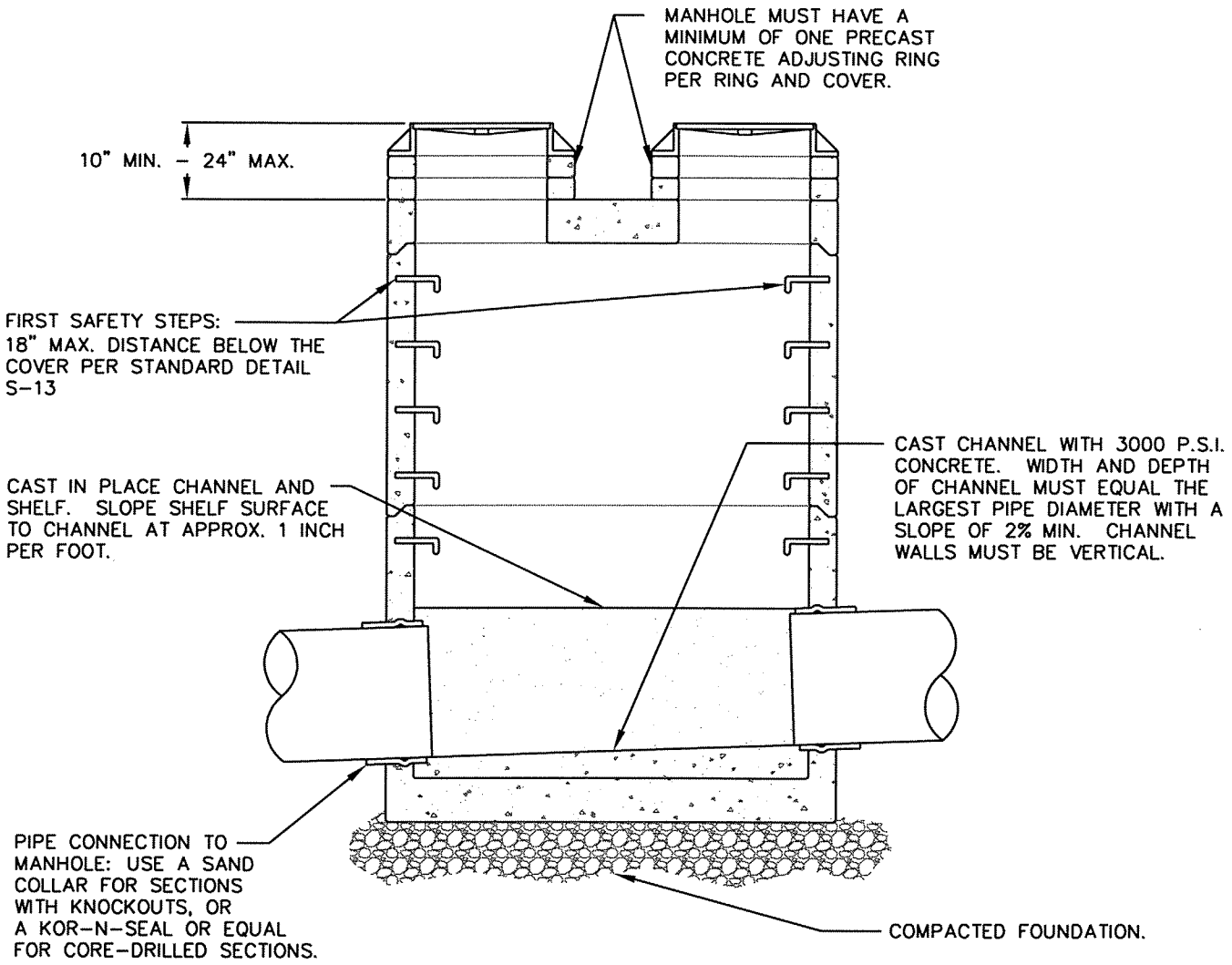

NOTES:

1. MANHOLE SHALL CONFORM TO THE GENERAL NOTES AND ALL APPLICABLE REQUIREMENTS OF STANDARD DETAIL S-1.
2. PROVIDE TWO 24" RING AND COVERS, ONE LOCATED OVER THE MAJOR INCOMING AND OUTGOING PIPES.
3. MANHOLES SHALL BE CONSTRUCTED IN ACCORDANCE WITH ASTM C-478 UNLESS OTHERWISE SHOWN ON PLANS OR NOTED IN THE STANDARD SPECIFICATIONS.
4. PRECAST BASES SHALL BE FURNISHED WITH KNOCKOUTS. KNOCKOUTS SHALL HAVE WALL THICKNESS OF 2" MINIMUM. UNUSED KNOCKOUTS DO NOT NEED TO BE GROUTED IF LEFT IN INTACT. PIPE SHALL BE INSTALLED ONLY IN FACTORY KNOCKOUTS UNLESS CORE-DRILLED HOLES ARE APPROVED BY THE CITY.
5. KNOCKOUT OR CORE-DRILLED HOLES SHALL EQUAL THE PIPE OUTSIDE DIAMETER PLUS MANHOLE WALL THINKNESS. MAXIMUM HOLE SIZE DIAMETER SHALL BE 60" FOR 72" MANHOLE AND 84" FOR 96" MANHOLE. MINIMUM DISTANCE BETWEEN HOLES SHALL BE 12".
6. MINIMUM OF 6 FOOT SEPARATION BETWEEN THE PIPE CROWN TOP SLAB OR CONE SECTION.
7. FOR HEIGHTS OF 12' OR LESS, MINIMUM SOIL BEARING VALUE SHALL EQUAL 3,300 POUNDS PER SQUARE FOOT. FOR HEIGHTS OVER 12', MINIMUM SOIL BEARING VALUE SHALL EQUAL 3,800 POUNDS PER SQUARE FOOT.
8. FOR JOINT REQUIREMENTS, SEE WSDOT STANDARD SPECIFICATION SECTION 7-05.3.
9. GROUT ALL JOINTS INSIDE, OUTSIDE AND IN BETWEEN TO ACHIEVE WATERTIGHT CONSTRUCTION. FINISH SMOOTH THE INSIDE OF STRUCTURE. USE NON-SHRINK GROUT ONLY.

City of Bellevue

SEWER UTILITIES

TITLE

TYPE 3 MANHOLE
72" AND 96"

JANUARY 2008

NO SCALE

NO. S-3

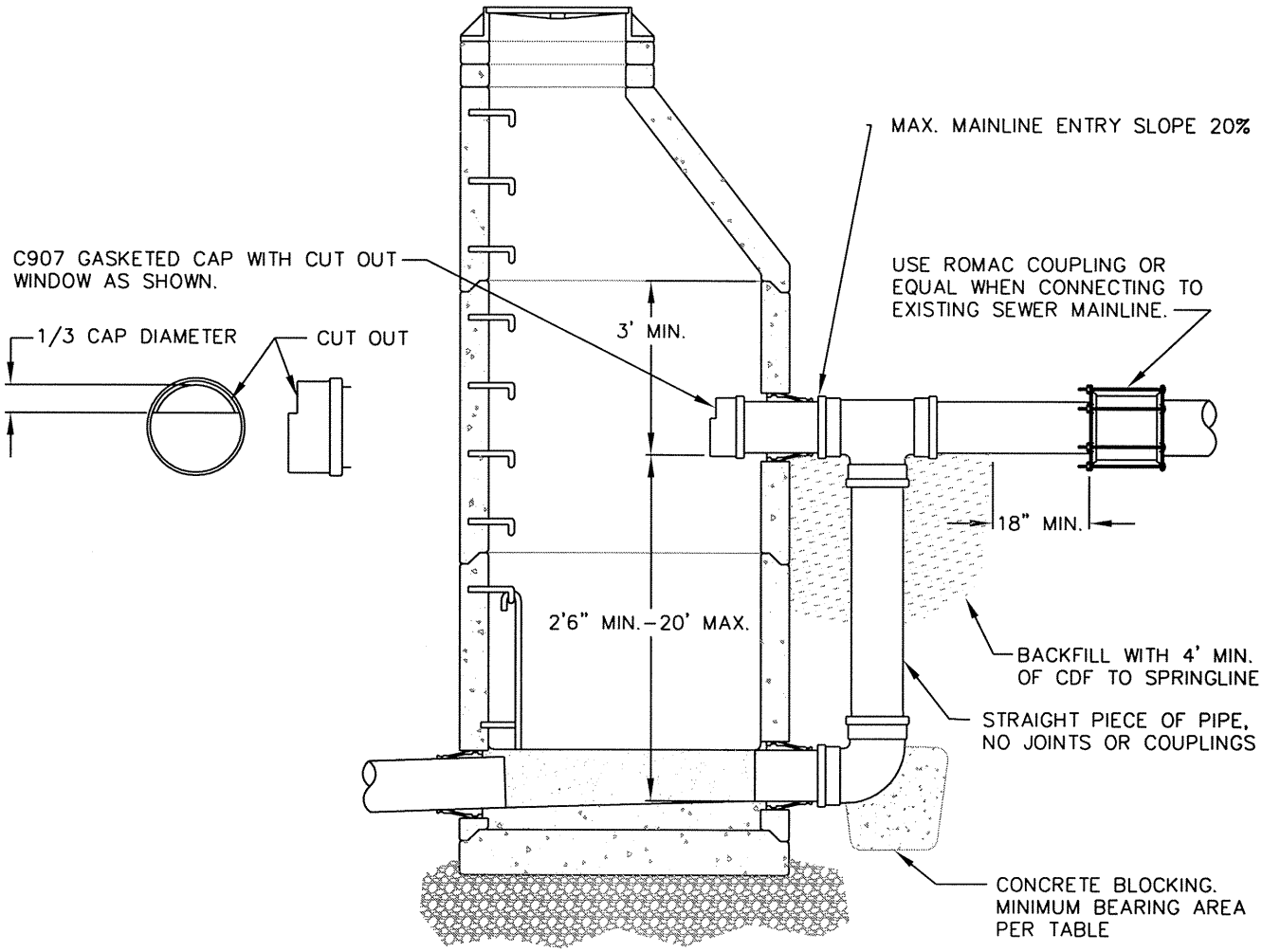

NOTES:

1. MANHOLE SHALL CONFORM TO GENERAL NOTES AND ALL APPICABLE REQUIREMENTS OF STANDARD DETAIL S-1.
2. OUTSIDE DROP SHALL BE CONSTRUCTED USING AWWA C900 PIPE AND AWWA C907 FITTINGS.
3. DROP TEE TO BE INSTALLED MINIMUM OF 3' BELOW CONE SECTION.
4. CHANNEL BASE WITH 3000 PSI CONCRETE. WIDTH AND DEPTH OF CHANNEL MUST EQUAL THE LARGEST PIPE DIAMETER WITH A SLOPE OF 2% MIN. CHANNEL WALLS MUST BE VERTICAL. SLOPE SHELF TO CHANNEL AT 1" PER FOOT MIN.
5. CORE DRILL OPENINGS FOR NEW PIPE WHEN DROP IS INSTALLED ON EXISTING MANHOLE. USE KOR-N-SEAL CONNECTORS OR EQUAL.
6. USE ROMAC COUPLING OR EQUAL WHEN CONNECTING TO EXISTING SEWER MAINLINE.
7. USE C900 X SDR 35 PVC ADAPTER WHEN CONNECTING TO SDR 35 PVC MAINLINE.

BEARING AREA BASED ON 2000 POUNDS PER SQUARE FOOT SAFE BEARING LOAD. (FOR PIPE UP TO 18 INCH DIAMETER)

HEIGHT OF DROP IN FEET	MINIMUM BEARING AREA IN SQUARE FEET
2 1/2 - 5	1.0
6 - 10	2.0
11 - 15	2.5
16 - 20	3.0

City of Bellevue

SEWER UTILITIES

TITLE

OUTSIDE DROP STRUCTURE

JANUARY 2008

NO SCALE

NO. S-4

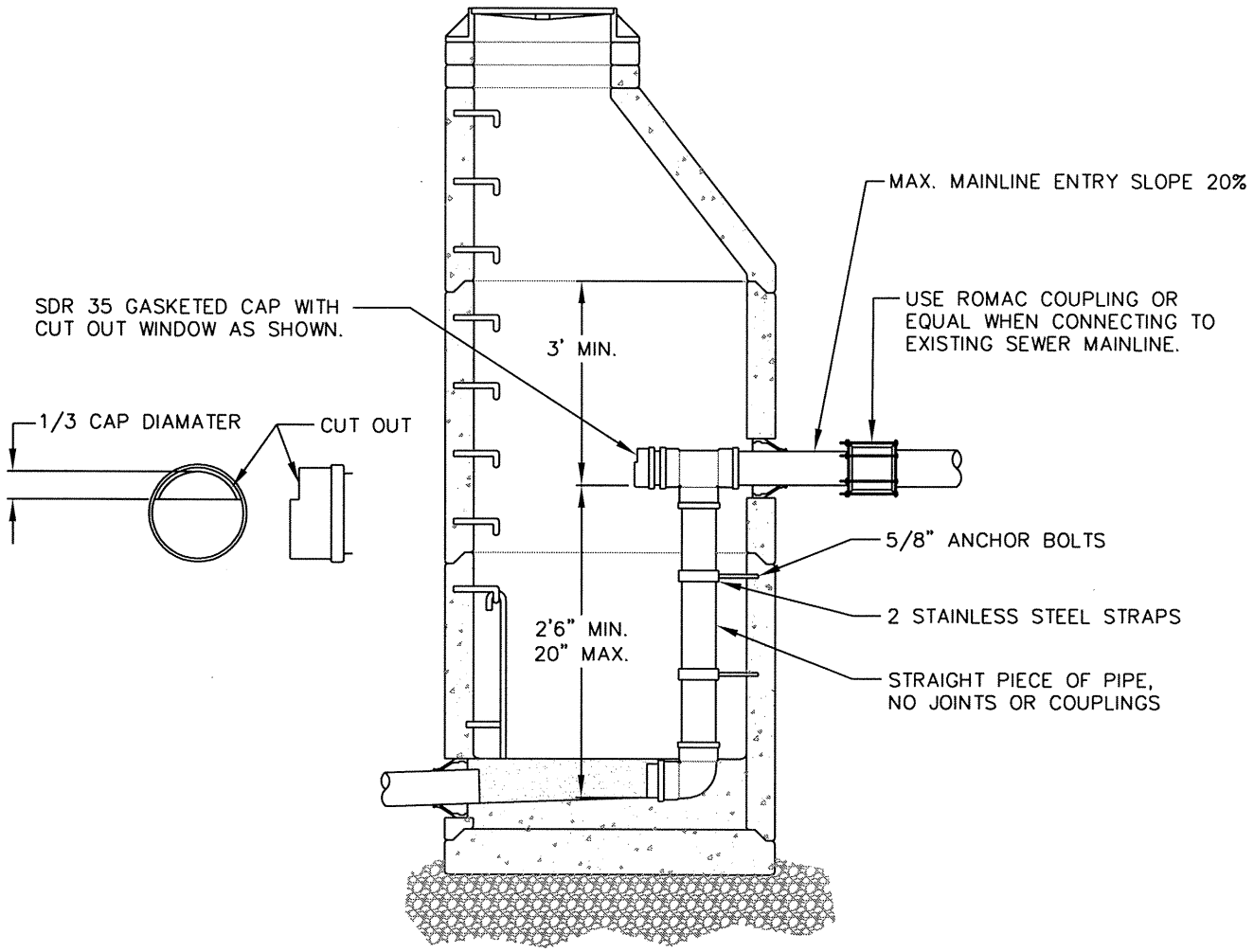

NOTES:

1. MANHOLE SHALL CONFORM TO GENERAL NOTES AND ALL APPICABLE REQUIREMENTS OF STANDARD DETAIL S-1.
2. INSIDE DROP MANHOLE SHALL BE INSTALLED ONLY WHERE APPOVED BY THE CITY.
3. INSIDE DROP IS ONLY ALLOWED ON EXISTING MANHOLES.
4. DROP TEE TO BE INSTALLED MINIMUM OF 3' BELOW CONE SECTION.
5. INSIDE DROP SHALL BE CONSTRUCTED USING ASTM D3034 SDR 35 PIPE AND FITTING.
6. RECHANNEL BASE WITH 3000 PSI CONCRETE. WIDTH AND DEPTH OF CHANNEL MUST EQUAL THE LARGEST PIPE DIAMETER WITH A SLOPE OF 2% MIN. CHANNEL WALLS MUST BE VERTICAL. SLOPE SHELF TO CHANNEL AT 1" PER FOOT MIN.
7. CORE DRILL OPENINGS FOR NEW PIPE AND USE KOR-N-SEAL CONNECTORS OR EQUAL.
8. USE ROMAC COUPLING OR EQUAL WHEN CONNECTING TO EXISTING SEWER MAINLINE.

City of Bellevue

SEWER UTILITIES

TITLE

INSIDE DROP STRUCTURE

JANUARY 2008

NO SCALE

NO. S-5

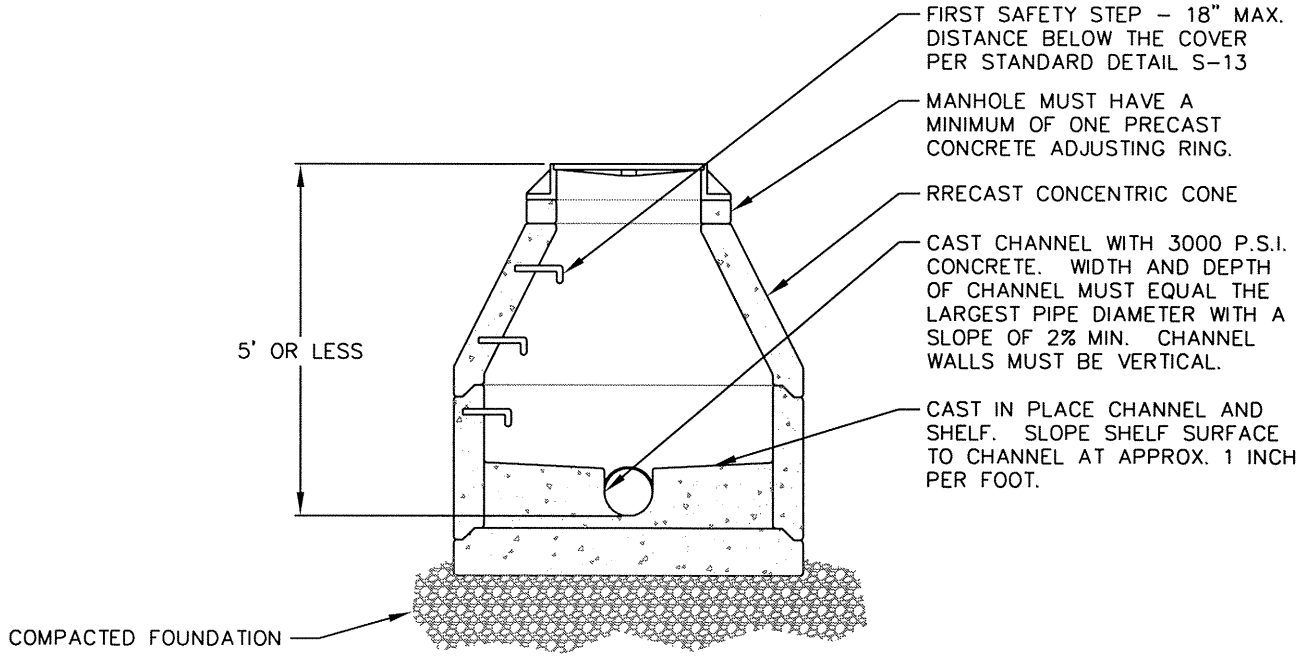

NOTES:

1. MANHOLE SHALL CONFORM TO THE GENERAL NOTES AND ALL APPLICABLE REQUIREMENTS OF STANDARD DETAIL S-1.
2. MANHOLES UNDER 5' IN DEPTH FROM RIM TO INVERT SHALL BE CONSTRUCTED WITH A CONCENTRIC CONE. MANHOLES OVER 5' SHALL BE CONSTRUCTED WITH AN ECCENTRIC CONE AND COMFORM TO STANDARD DETAIL S-1.
3. PIPE CONNECTION TO MANHOLE: KOR-N-SEAL OR EQUAL FOR CORE-DRILLED SECTIONS, OR SAND COLLAR FOR SECTIONS WITH KNOCKOUTS.
4. GROUT ALL JOINTS INSIDE, OUTSIDE AND IN BETWEEN TO ACHIEVE WATERTIGHT CONSTRUCTION. FINISH SMOOTH THE INSIDE OF STRUCTURE. USE NON-SHRINK GROUT ONLY.

City of Bellevue

SEWER UTILITIES

TITLE

MANHOLE UNDER 5 FEET DEEP

JANUARY 2008

NO SCALE

NO. S-6

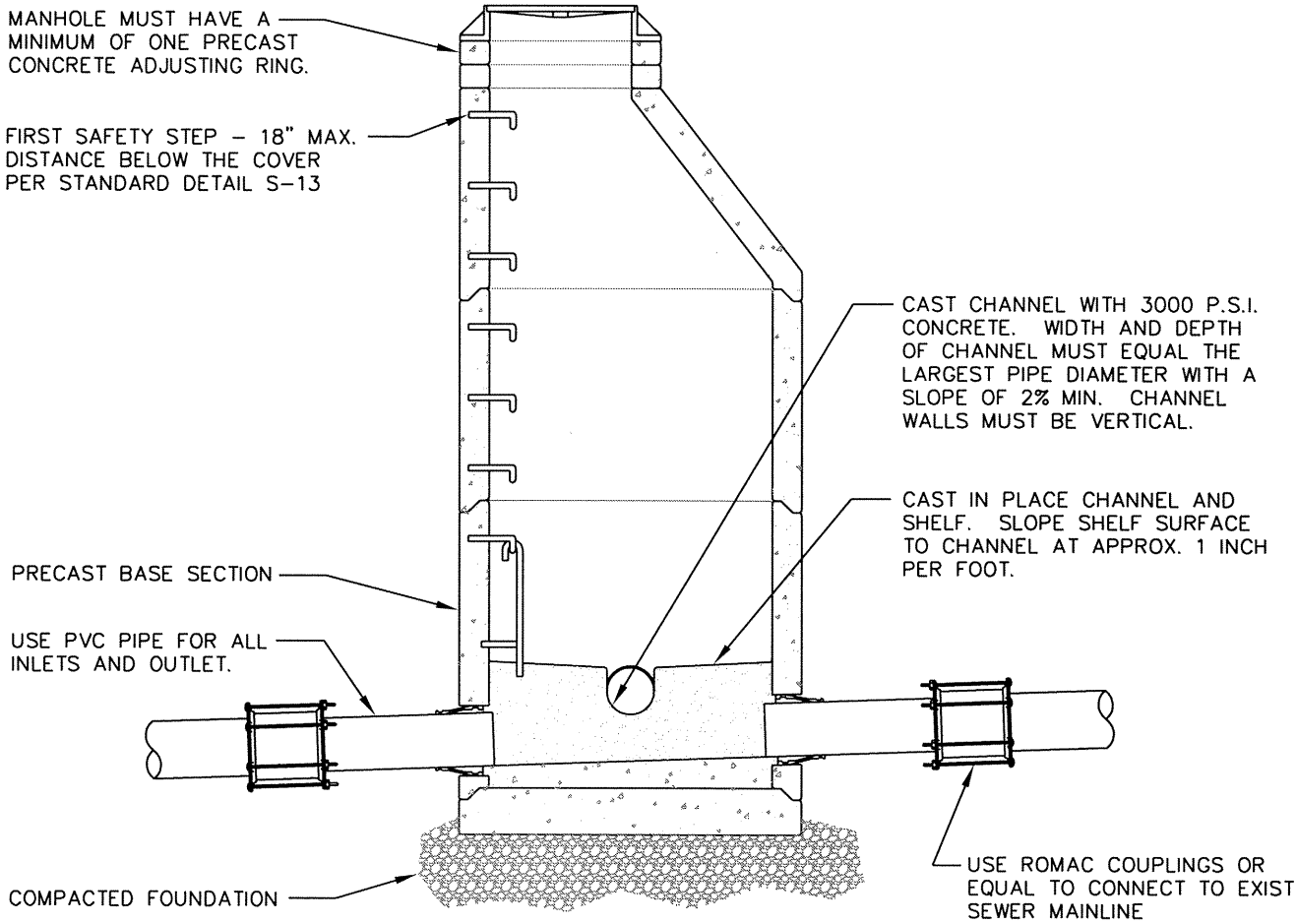

NOTES:

1. MANHOLE SHALL CONFORM TO THE GENERAL NOTES AND ALL APPLICABLE REQUIREMENTS OF STANDARD DETAIL S-1.
2. THE ENTRY ANGLE OF THE NEW SEWER CONNECTION, RELATIVE TO THE EXISTING SEWER MAIN INLET, SHALL BE 90 DEGREES OR LESS.
3. IF NEW SEWER CONNECTION IS A MAINLINE, THE INVERT OF THE NEW PIPE SHALL BE SET AT THE SPRINGLINE OF THE EXISTING MAINLINE.
4. IF NEW SEWER CONNECTION IS A SIDE SEWER, THE INVERT OF THE NEW PIPE SHALL BE SET AT OR ABOVE THE CROWN OF THE EXISTING MAINLINE. NEW CONNECTION NOT TO EXCEED 18" ABOVE THE MAINLINE INVERT.
5. PVC PIPE CONNECTION TO MANHOLE: KOR-N-SEAL OR EQUAL FOR CORE-DRILLED SECTIONS, OR SAND COLLAR FOR SECTIONS WITH KNOCKOUTS.
6. CONNECT NEW PVC PIPE TO EXISTING SEWER MAINLINE WITH ROMAC COUPLING OR EQUAL.
7. GROUT ALL JOINTS INSIDE, OUTSIDE AND IN BETWEEN TO ACHIEVE WATERTIGHT CONSTRUCTION. FINISH SMOOTH THE INSIDE OF STRUCTURE. USE NON-SHRINK GROUT ONLY.

City of Bellevue

SEWER UTILITIES

TITLE

NEW MANHOLE ON EXISTING SEWER

JANUARY 2008

NO SCALE

NO. S-7

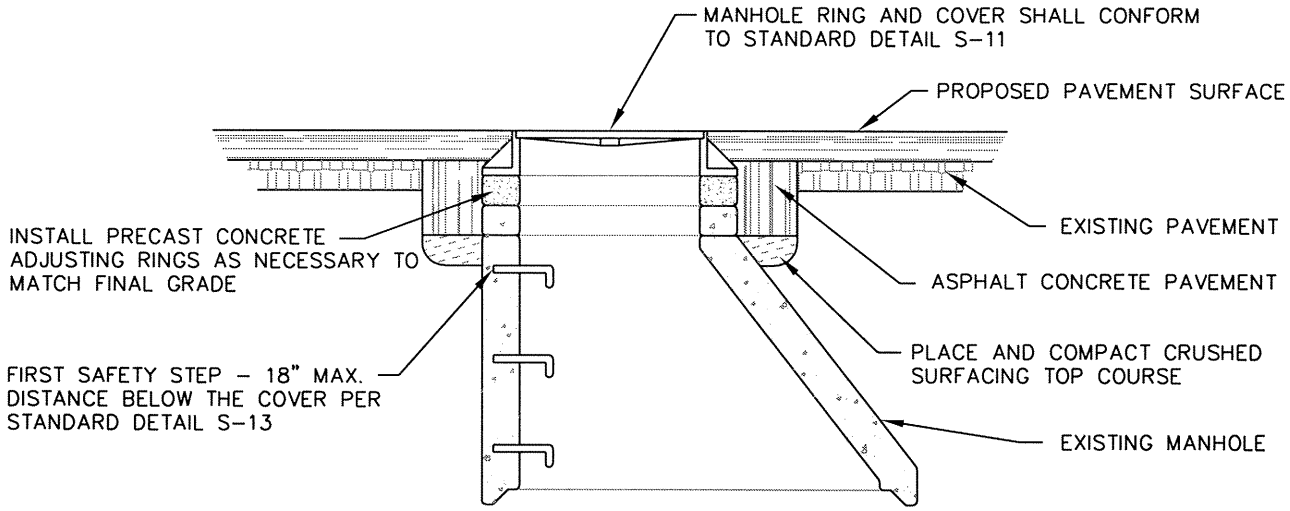

PAVED AREAS

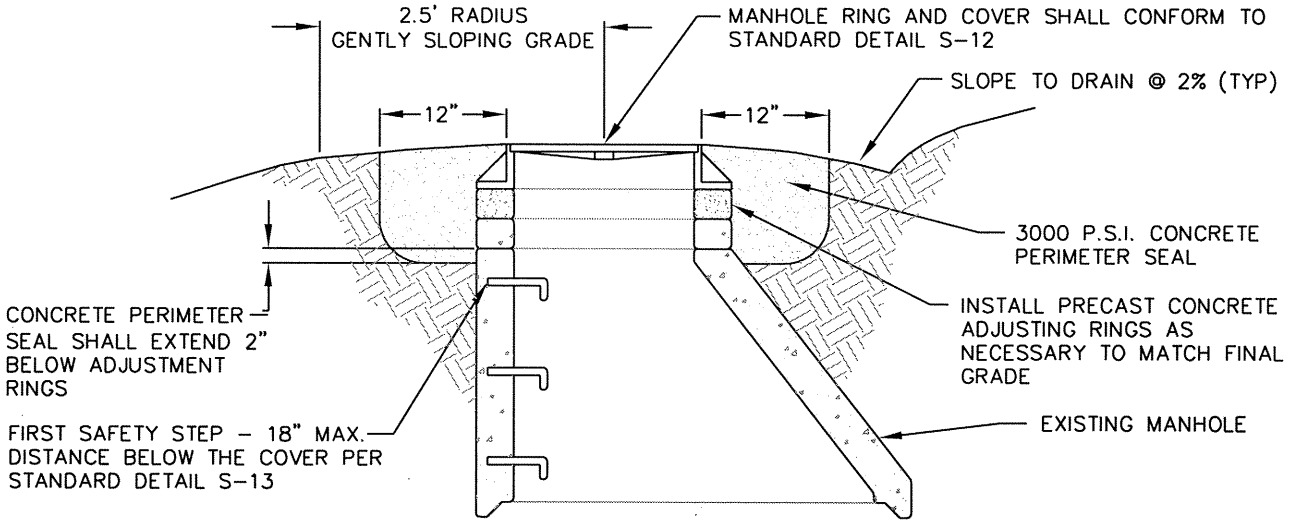

UNPAVED AREAS

NOTES:

1. 3/4" OF NON-SHRINK GROUT SHALL BE PLACED BETWEEN EACH LEVEL OF THE ADJUSTING RINGS, INCLUDING THE TOP OF THE CONE SECTION AND THE BOTTOM OF THE IRON RING.
2. GROUT INSIDE AND OUTSIDE OF THE MANHOLE NECK TO ACHIEVE WATERTIGHT CONSTRUCTION. FINISH SMOOTH THE INSIDE OF THE NECK. USE NON-SHRINK GROUT ONLY.
3. PRECAST ADJUSTING RINGS MUST BE CAST WITH GROOVES TO ALLOW FIELD INSTALLATION OF SAFETY STEPS.
4. SAFETY STEPS SHALL BE ADDED AS NEEDED.
5. REPLACE EXISTING RING AND COVER IF NON-CONFORMING OR WORN.
6. LOCKING RING AND COVERS ARE REQUIRED IN ALL UNPAVED AREAS AND EASEMENTS. LOCKING RING AND COVER SHALL CONFORM TO STANDARD DETAIL S-12.

City of Bellevue

SEWER UTILITIES

TITLE

MANHOLE GRADE ADJUSTMENT

JANUARY 2008

NO SCALE

NO. S-8

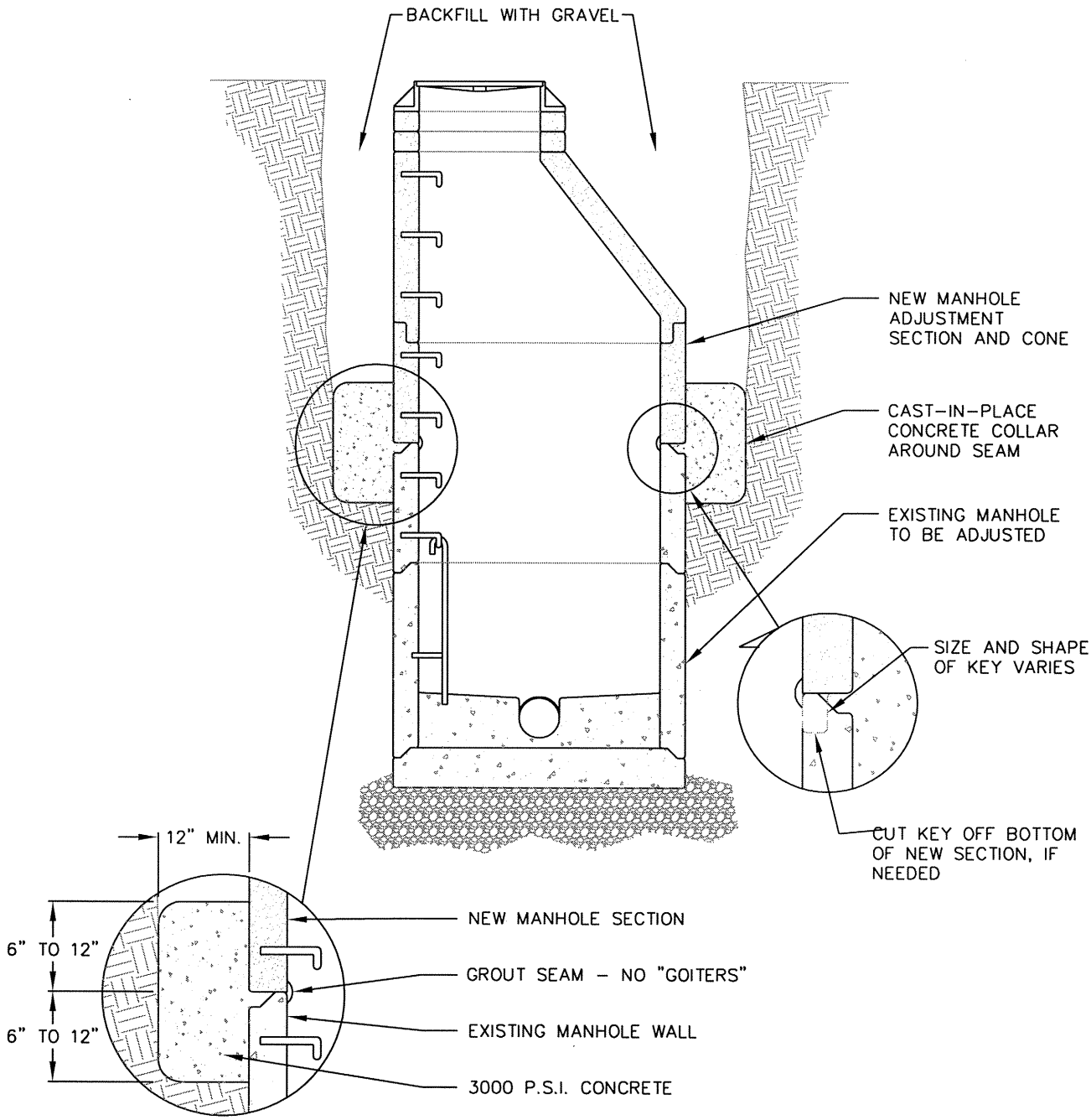

NOTES:

1. MANHOLE SHALL CONFORM TO THE GENERAL NOTES AND ALL APPLICABLE REQUIREMENTS OF STANDARD DETAIL S-1.
2. WHERE DEPTH OF MANHOLE NECK EXCEEDS 24", ADJUST MANHOLE TO GRADE BY INSTALLING NEW MANHOLE BARREL SECTION AND CONE ON EXISTING MANHOLE BARREL.
3. WHERE KEY SECTIONS OF NEW AND EXISTING MANHOLES ARE NOT COMPATIBLE, CUT KEY OFF BOTTOM OF NEW SECTION AND PROVIDE A CAST-IN-PLACE CONCRETE COLLAR AROUND MANHOLE PERIMETER. CAST COLLAR WITH 3000 P.S.I CONCRETE.
4. UPWARD ADJUSTMENT OF EXISTING MANHOLES MUST BE DONE WITH ALL NEW PARTS, AS NECESSARY, TO ENSURE ONLY ONE INCOMPATIBLE SEAM.
5. GROUT ALL JOINTS INSIDE, OUTSIDE AND IN BETWEEN TO ACHIEVE WATERTIGHT CONSTRUCTION. FINISH SMOOTH THE INSIDE OF STRUCTURE. USE NON-SHRINK GROUT ONLY.

City of Bellevue

SEWER UTILITIES

TITLE

MANHOLE SECTION ADJUSTMENT

JANUARY 2008

NO SCALE

NO. S-9

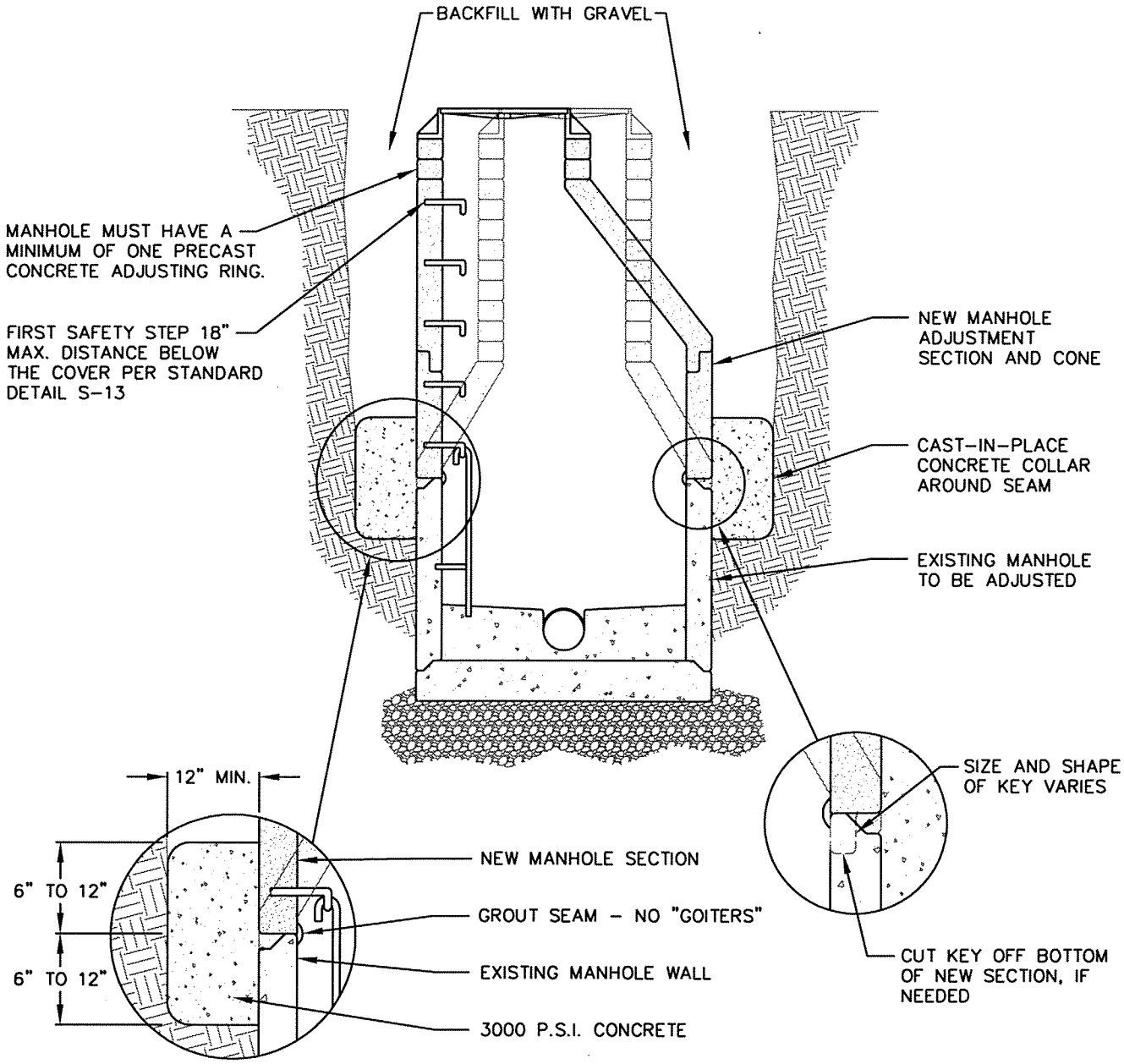

NOTES:

1. MANHOLE SHALL CONFORM TO THE GENERAL NOTES AND ALL APPLICABLE REQUIREMENTS OF STANDARD DETAIL S-1.
2. WHERE DEPTH OF MANHOLE WITH CONCENTRIC CONE EXCEEDS 5 FEET, ADJUST MANHOLE TO GRADE BY INSTALLING NEW ECCENTRIC CONE AND BARREL SECTION ON EXISTING MANHOLE BASE SECTION.
3. WHERE KEY SECTIONS OF NEW AND EXISTING MANHOLES ARE NOT COMPATIBLE, CUT KEY OFF BOTTOM OF NEW SECTION AND PROVIDE A CAST-IN-PLACE CONCRETE COLLAR AROUND MANHOLE PERIMETER. CAST COLLAR WITH 3000 P.S.I CONCRETE.
4. UPWARD ADJUSTMENT OF EXISTING MANHOLES MUST BE DONE WITH ALL NEW PARTS, AS NECESSARY, TO ENSURE ONLY ONE INCOMPATIBLE SEAM.
5. SAFETY STEPS IN PRECAST BASE SECTION MAY BE CAST IN PLACE OR A PREFABRICATED LADDER GROUTED OR BOLTED IN PLACE. SEE STANDARD DETAIL S-13.
6. GROUT ALL JOINTS INSIDE, OUTSIDE AND IN BETWEEN TO ACHIEVE WATERTIGHT CONSTRUCTION. FINISH SMOOTH THE INSIDE OF STRUCTURE. USE NON-SHRINK GROUT ONLY.

City of Bellevue

SEWER UTILITIES

TITLE

MANHOLE CONE ADJUSTMENT (CONCENTRIC TO ECCENTRIC)

JANUARY 2008

NO SCALE

NO. S-10

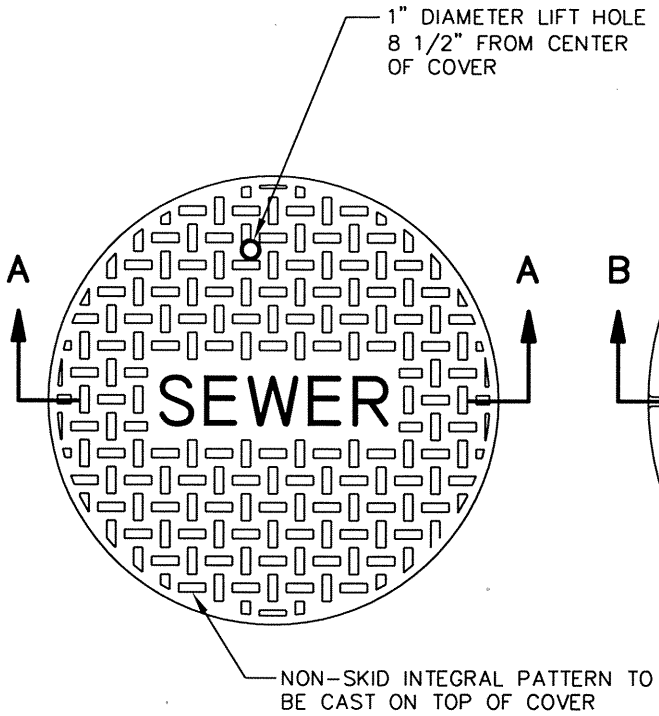

COVER PLAN

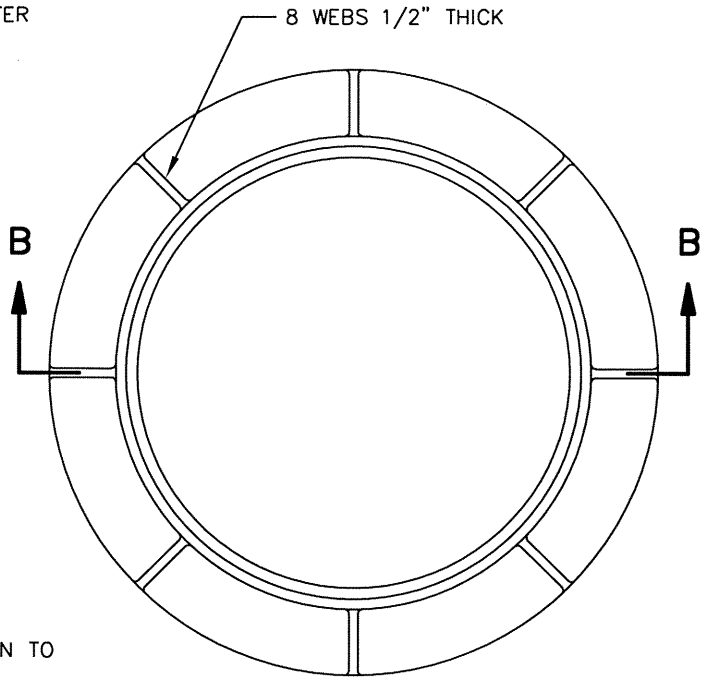

RING PLAN

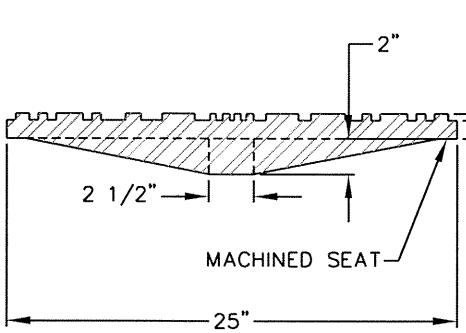

SECTION A–A

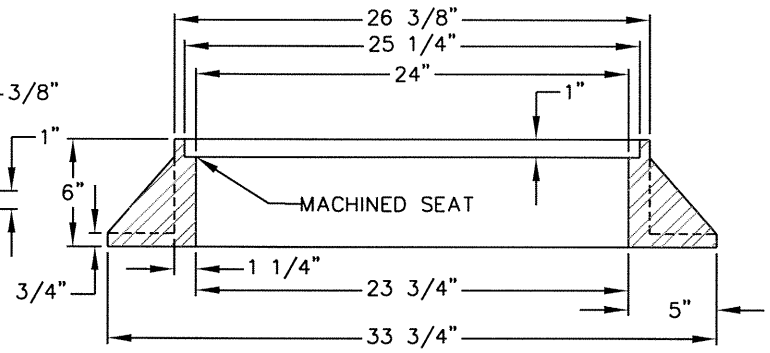

SECTION B–B

NOTES:

1. COVER SHALL HAVE THE WORD "SEWER" CAST IN 3" RAISED LETTERS.
2. ONLY FOR USE IN PUBLIC RIGHT-OF-WAY (PAVED AREAS AND SIDEWALKS).
3. RING AND COVER SHALL BE RATED HS-20.
4. RING AND COVER MATERIAL IS DUCTILE IRON, ASTM A536 - GRADE 80-55-06 OR CAST IRON, ASTM A30 - CLASS 25.
5. OLYMPIC FOUNDRY MH30A, OR EQUAL.
6. DUCTILE OR CAST COVER SHALL HAVE MINIMUM WEIGHT OF 150 LBS.
7. DUCTILE OR CAST RING SHALL HAVE MINIMUM WEIGHT OF 210 LBS.

City of Bellevue

SEWER UTILITIES

TITLE

24" MANHOLE RING AND COVER

JANUARY 2008

NO SCALE

NO. S-11

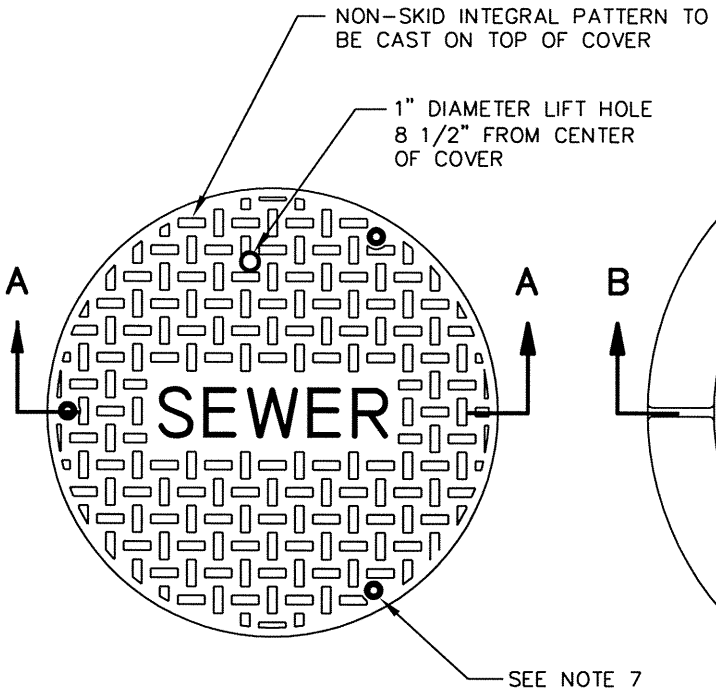

COVER PLAN

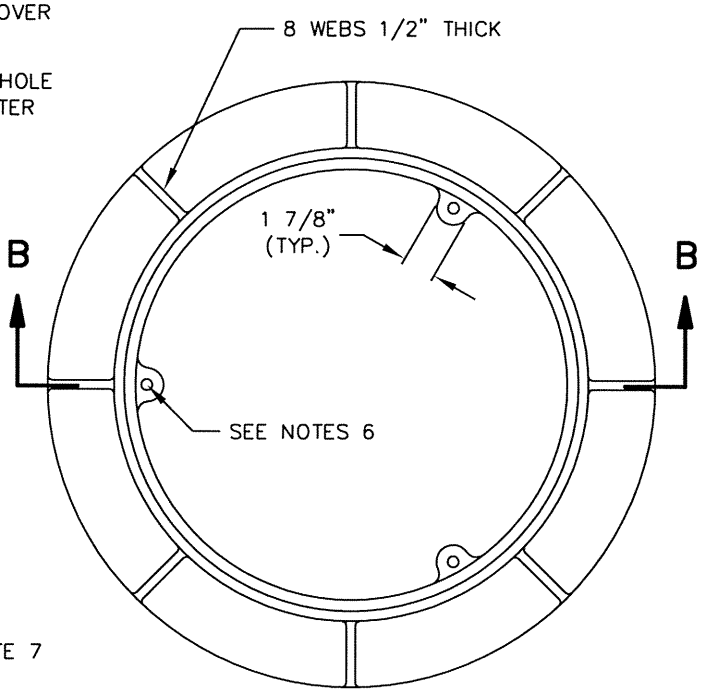

RING PLAN

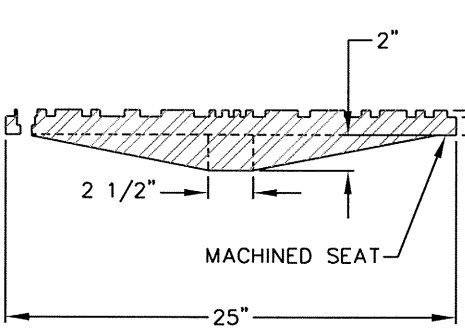

SECTION A–A

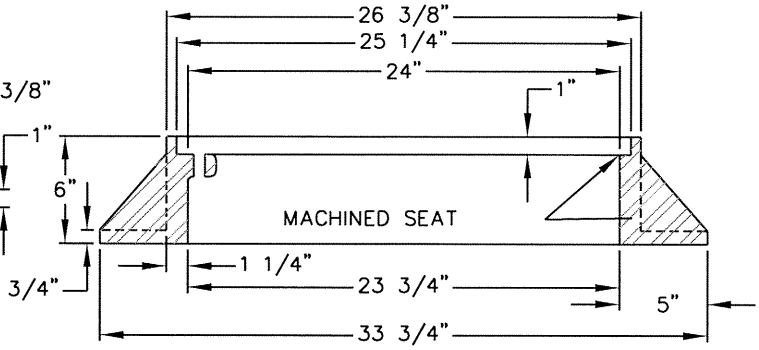

SECTION B–B

NOTES:

1. COVER SHALL HAVE THE WORD "SEWER" CAST IN 3" RAISED LETTERS.
2. ONLY FOR USE IN EASEMENTS AND UNPAVED AREAS. DO NOT USE IN PAVED AREAS.
3. RING AND COVER MATERIAL: DUCTILE IRON ASTM A536-GRADE 80-55-06 OR CAST IRON ASTM A48-CLASS 30.
4. DUCTILE OR CAST COVER SHALL HAVE MINIMUM WEIGHT OF 150 LBS.
5. DUCTILE OR CAST RING SHALL HAVE MINIMUM WEIGHT OF 210 LBS.
6. RING SHALL HAVE THREE 5/8"-11 N.C. TAPPED HOLES AT 120 DEGREES.
7. COVER SHALL HAVE THREE COUNTERSUNK 5/8"-11 N.C THROUGH HOLES AT 120 DEGREES TO MATCH RING.
8. LOCKING BOLTS SHALL BE 5/8"-11 N.C. X 2" 304 STAINLESS STEEL SOCKET (ALLEN) HEAD.
9. OLYMPIC FOUNDRY MH30AD/T, OR EQUAL.
10. RING AND COVER SHALL BE RATED HS-20.

City of Bellevue

SEWER UTILITIES

TITLE

24" BOLT-LOCKING MANHOLE RING AND COVER

JANUARY 2008

NO SCALE

NO. S-12

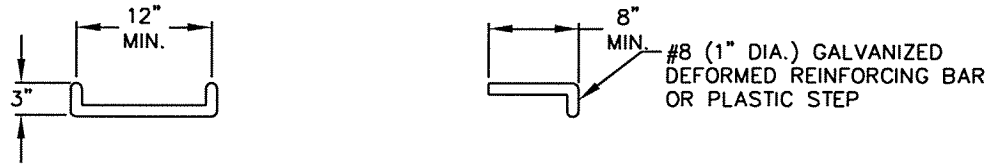

SAFETY STEP

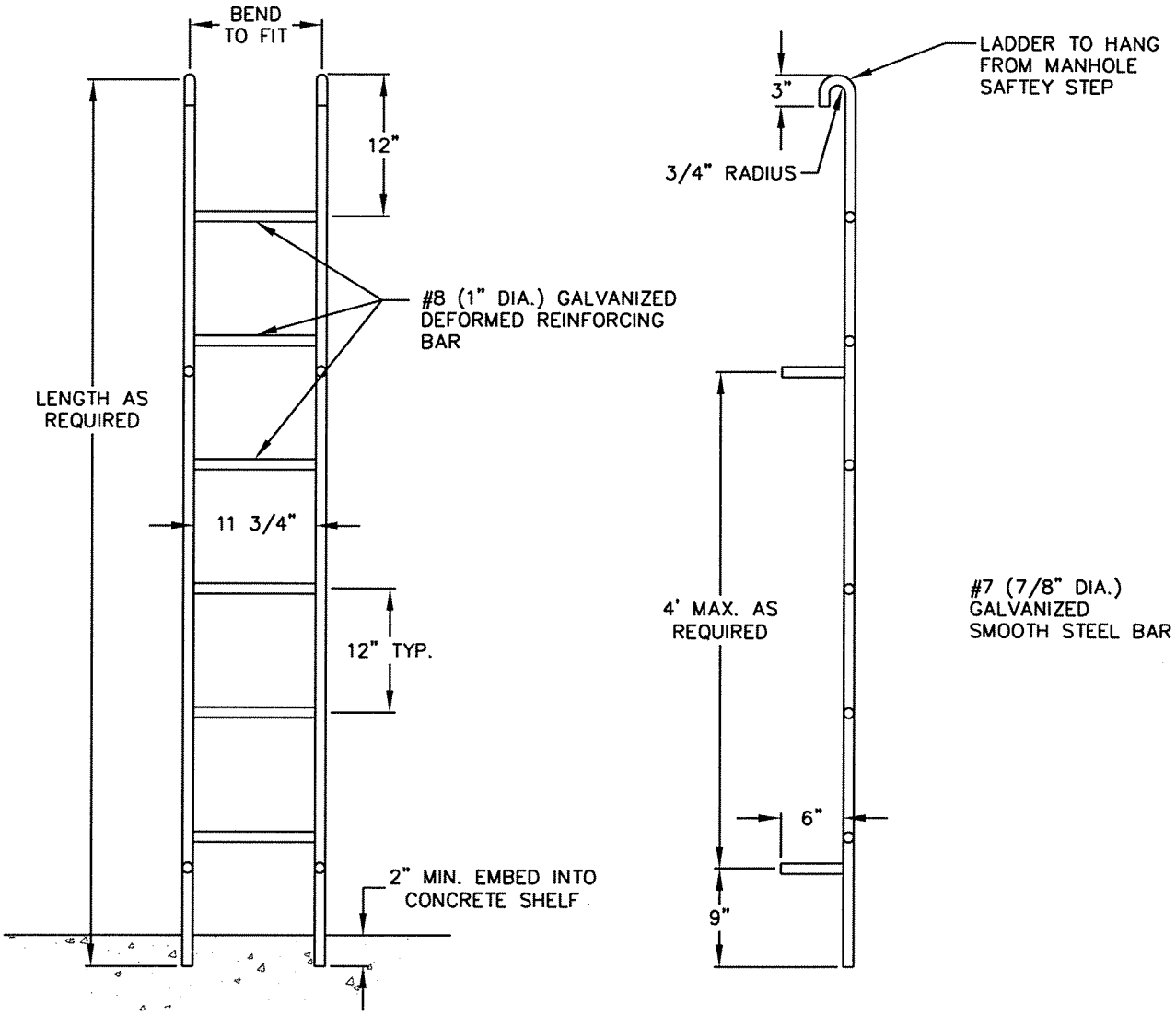

PREFABRICATED LADDER

NOTES:

1. DEFORMED REINFORCING BAR SHALL CONFORM TO ASTM A-615.
2. GALVANIZED METAL PARTS SHALL CONFORM TO ASTM A-123.
3. PLASTIC STEPS SHALL BE POLYPROPYLENE AND CONFORM TO ASTM D-4101 WITH 1/2" ASTM-615 GRADE 60 STEEL REINFORCING BAR. LANE P-13938, M.A. PS2-PF, OR EQUAL.

City of Bellevue

SEWER UTILITIES

TITLE

SAFETY STEP AND PREFABRICATED LADDER

JANUARY 2008

NO SCALE

NO. S-13

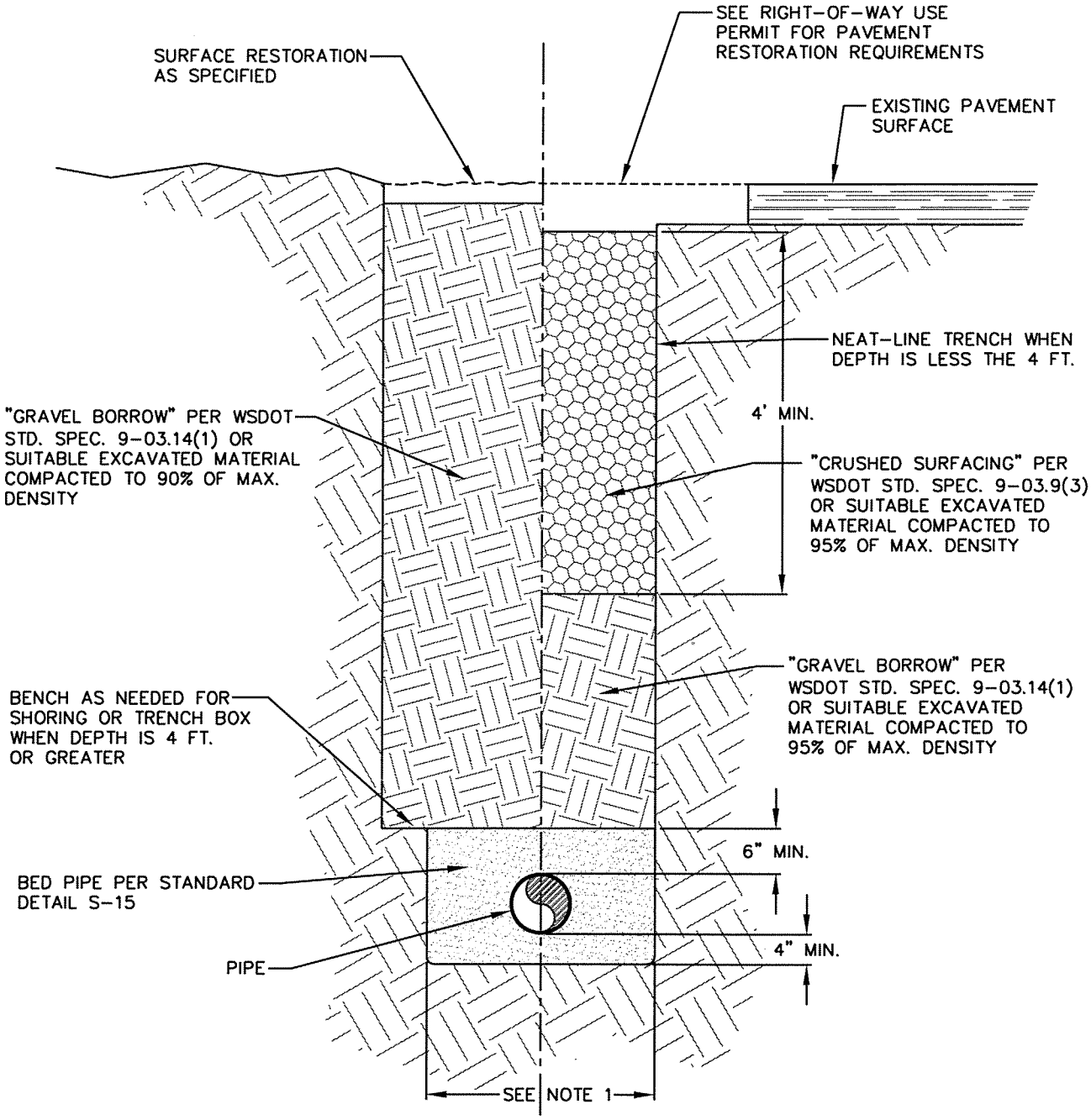

UNPAVED AREAS

PAVED AREAS

NOTES:

1. MAXIMUM WIDTH OF TRENCH AT TOP OF PIPE:
   - 30" FOR PIPE UP TO AND INCLUDING 12" NOMINAL DIAMETER.
   - O.D. PLUS 16" FOR PIPE LARGER THAN 12" NOMINAL DIAMETER.
2. EXCAVATIONS OVER 4" DEEP SHALL COMPLY WITH THE SAFETY STANDARD DISCRIBED IN CHAPTER 296-155 - PART N OF THE WAC.

City of Bellevue

SEWER UTILITIES

TITLE

TYPICAL TRENCH DETAIL

JANUARY 2008

NO SCALE

NO. S-14

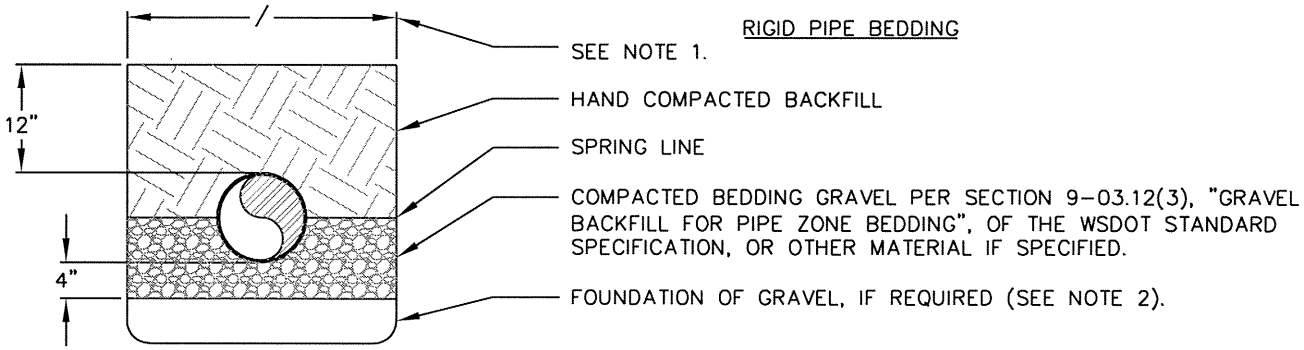

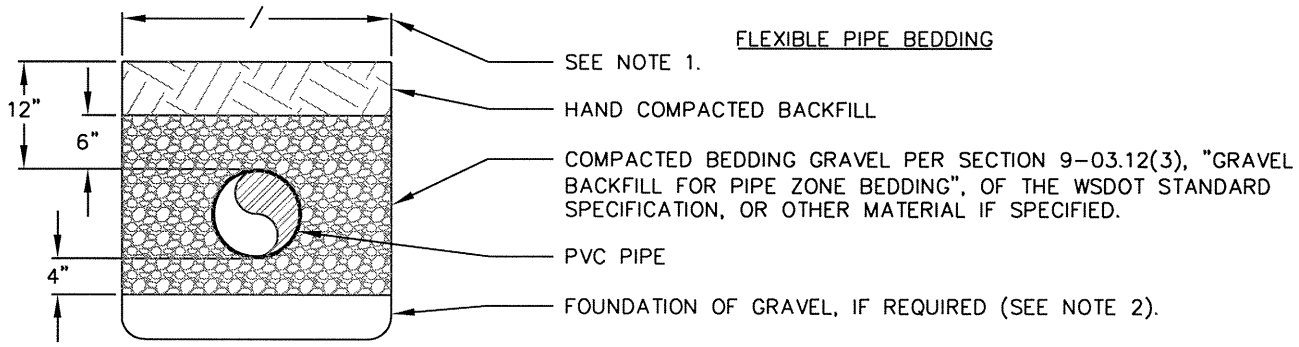

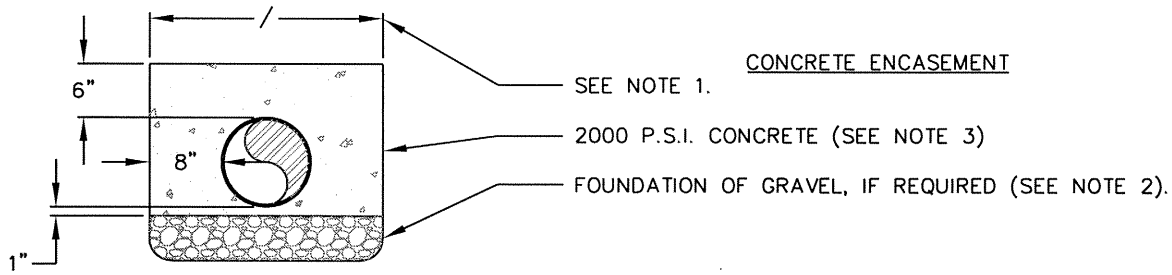

NOTES:

1. MAXIMUM WIDTH OF TRENCH AT TOP OF PIPE IS 30" FOR PIPE UP TO AND INCLUDING 12" NOMINAL DIAMETER. FOR PIPE LARGER THAN 12" NOMINAL DIAMETER MAX. WIDTH SHALL BE PIPE O.D. PLUS 16".
2. EXCAVATE UNSTABLE MATERIAL DOWN TO FIRM SOIL AND REPLACE WITH FOUNDATION GRAVEL PER SECTION 9-03.9(3), "BALLAST", OF THE WSDOT STANDARD SPECIFICATIONS.
3. THE CONTRACTOR SHALL BE RESPONSIBLE FOR ANCHORING PIPE TO PREVENT FLOTATION DURING CONCRETE PLACEMENT.
4. COMPACTED CRUSHED SURFACING PER SECTION 9-03.9(3), "CRUSHED SURFACING", OF THE WSDOT STANDARD SPECIFICATIONS CAN ALSO BE USED AS BEDDING GRAVEL.

City of Bellevue

SEWER UTILITIES

TITLE

PIPE BEDDING

JANUARY 2008

NO SCALE

NO. S-15

OUTSIDE OF R.O.W OR EASEMENT

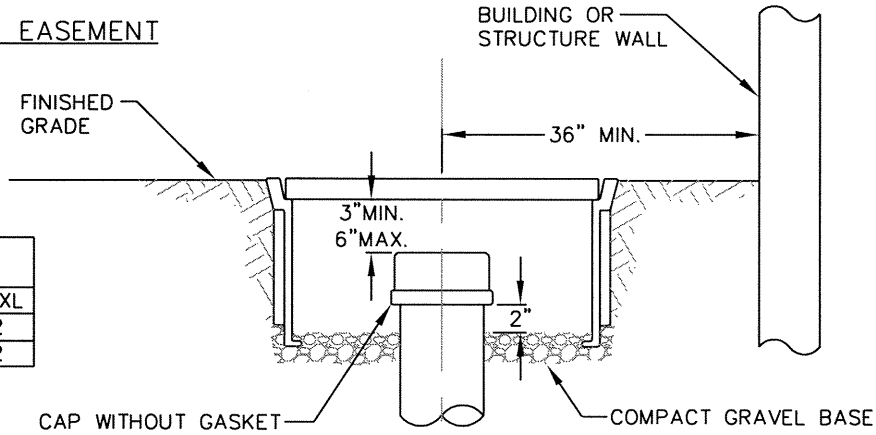

C.O. PIPE DIAMETER	MID-STATES PLASTIC BOX
4"	MSBCF-1118-18XL
6"	MSBCF-1324-12
8"	MSBCF-1730-12

RIGHT-OF-WAY OR EASEMENT

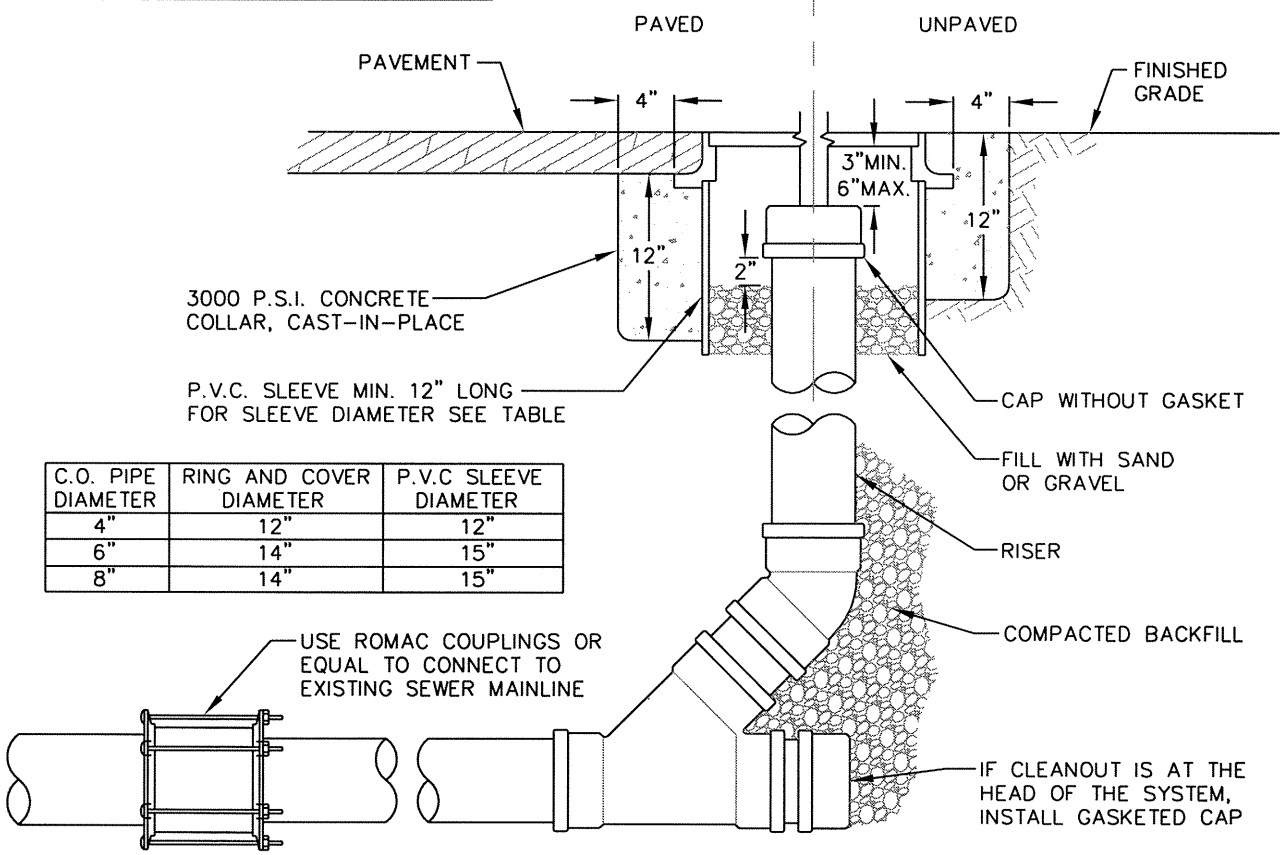

C.O. PIPE DIAMETER	RING AND COVER DIAMETER	P.V.C SLEEVE DIAMETER
4"	12"	12"
6"	14"	15"
8"	14"	15"

NOTES:

1. BOLT-LOCKING CAST IRON RING AND COVER SHALL BE USED IN RIGHT-OF-WAY AND EASEMENTS AND MUST BE RATED HS-20 IF USED IN PAVED AREAS. SEE TABLE FOR SIZES.
2. MID-STATES PLASTIC BOX OR EQUAL MAY BE USED IF C.O. IS OUTSIDE OF RIGHT-OF-WAY OR EASEMENT. SEE TABLE FOR SIZES. THE COVER FOR THE PLASTIC BOX SHALL BE DUCTILE IRON AND READ "SEWER" OR BE BLANK (NO LABEL).
3. CAST IRON COVER SHALL READ "SEWER, CO, OR DO NOT BURY".
4. LOCKING BOLTS SHALL BE 5/8"-11 N.C. 304 STAINLESS STEEL SOCKET (ALLEN) HEAD, 2" LONG.
5. 14" BOLT-LOCKING CAST IRON COVER SHALL BE EQUAL TO INLAND FOUNDRY NUMBER 209, OR 210.
6. SPECIAL "DECORATIVE" CASTING MAY BE USED IF PREAPPROVED BY CITY.

City of Bellevue

SEWER UTILITIES

TITLE

CLEANOUT TO GRADE

JANUARY 2008

NO SCALE

NO. S-16

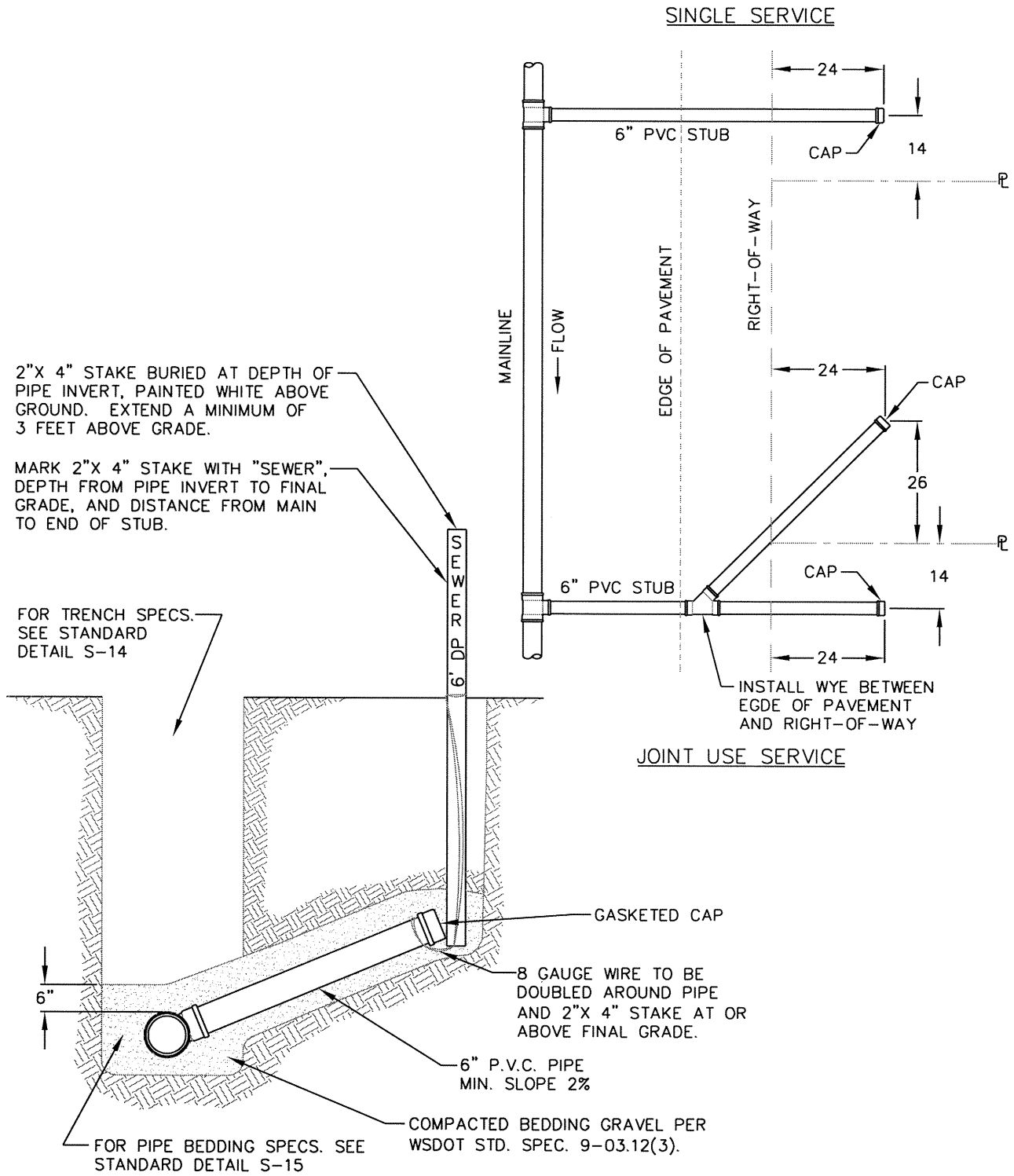

NOTES:

1. WHERE SIDE SEWER CONNECTS TO MANHOLE: INVERT OF SIDE SEWER SHALL BE EQUAL TO OR ABOVE MAIN SEWER CROWN, BUT NOT TO EXCEED 18" ABOVE INVERT OF MAIN SEWER.
2. UNLESS OTHERWISE INDICATED ON PLAN, SIDE SEWER SHALL BE MINIMUM OF 6' DEEP AT PROPERTY LINE, OR 5' LOWER THAN THE LOWEST ELEVATION, WHICHEVER IS LOWER.
3. PIPE CAN BE REDUCED TO 4" DIAMETER ON PRIVATE PROPERTY.

City of Bellevue

SEWER UTILITIES

TITLE

SIDE SEWER STUB

JANUARY 2008

NO SCALE

NO. S-17

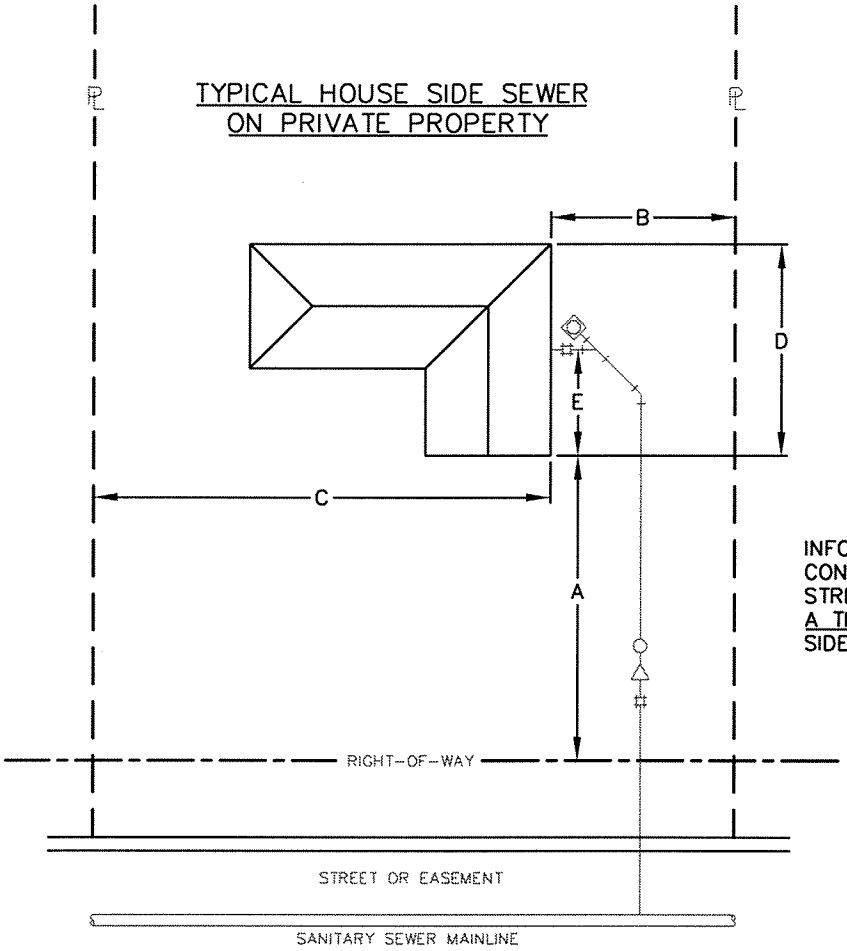

INFORMATION REQUIRED FOR SEWER CONNECTION PERMIT: LEGAL DESCRIPTION, STREET ADDRESS, PLAN WITH DIMENSIONS A THROUGH E SHOWN, AND COMPLETION OF SIDE SEWER APPLICATION.

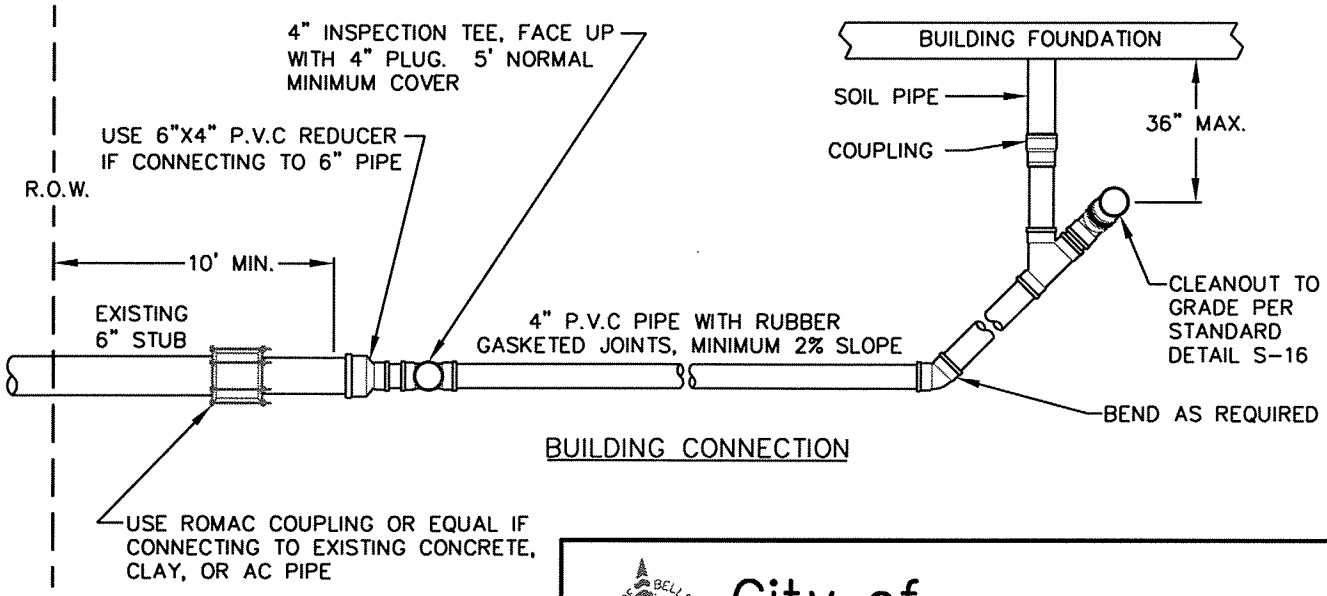

BUILDING CONNECTION

NOTES:

1. REMOVE 2"X4" STAKE AND CAP OR EXIST SIDE SEWER PIPE AND INSTALL NEW 4" P.V.C SIDE SEWER. USE COUPLINGS, REDUCERS, WYES, TEES, AND BENDS, AS REQUIRED TO FIT.

City of Bellevue

SEWER UTILITIES

TITLE

HOUSE SEWER CONNECTION

JANUARY 2008

NO SCALE

NO. S-18

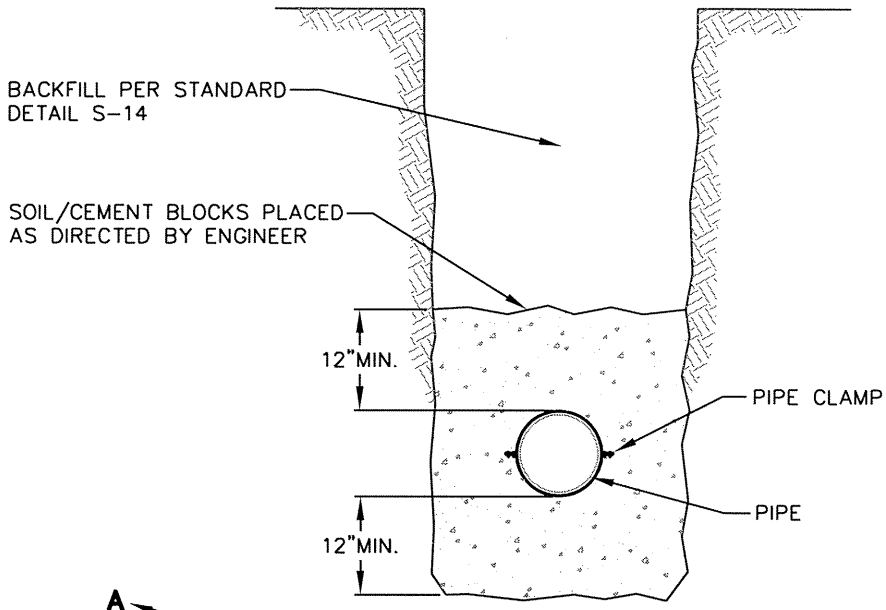

SECTION A-A

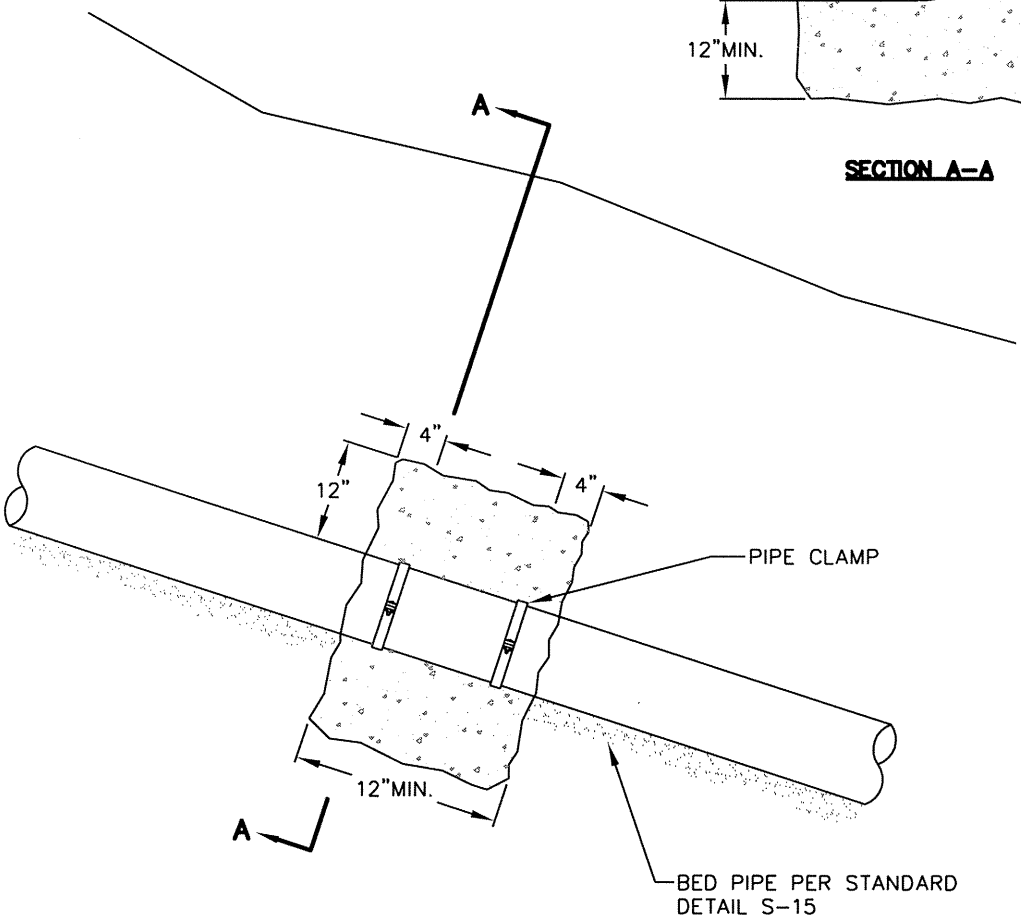

NOTES:

1. SOIL CEMENT BLOCKS REQUIRED ON PIPE SLOPES OF 20% OR GREATER.
2. SOIL CEMENT BLOCKS PLACED OVER AND AROUND. TAMPED INTO PLACE BEFORE BACKFILLING. USE 10% CEMENT WITH 90% NATIVE SOIL MIX. ADD ENOUGH WATER TO FORM A DRY MIX THAT WILL HOLD ITS SHAPE WHEN MOLDED INTO A BALL.
3. PLACE TWO PIPE CLAMPS, 4" FROM BLOCK ENDS TO PROVIDE ANCHORAGE TO SOIL/CEMENT MIX.

City of Bellevue

SEWER UTILITIES

TITLE

SOIL CEMENT PIPE ANCHORS

JANUARY 2008

NO SCALE

NO. S-19

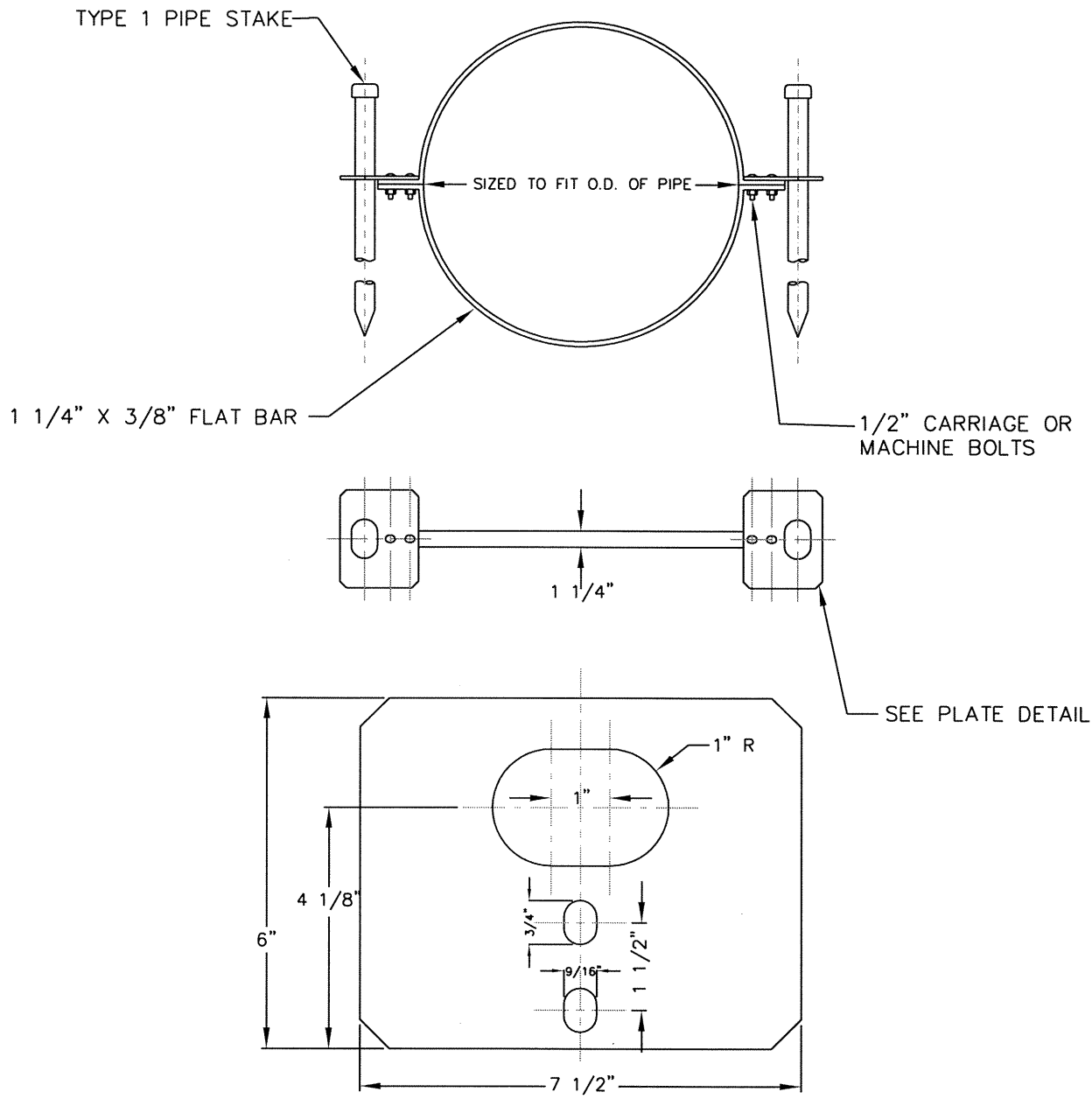

PLATE DETAIL

NOTES:

1. ALL PIPE STAKES, HARDWARE AND MATERIALS SHALL BE HOT DIPPED GALVANIZED AFTER FABRICATION.

2. TYPE 1 PIPE STAKE: 1 1/2" GALVANIZED PIPE 6' LONG WITH A 1 1/2" PIPE CAP OR A 1" COLLAR OF 2" PIPE WELDED TO ONE END. THE OTHER END IS TO BE FLATTENED OR CUT TO A POINT.

3. ANCHOR ASSEMBLY IS AN ALTERNATE TO S-19 (BURIED PIPE) OR FOR ABOVE GROUND PIPE WHERE APPROVED BY THE CITY.

City of Bellevue

SEWER UTILITIES

TITLE

PIPE STAKE ANCHOR ASSEMBLY

JANUARY 2008

NO SCALE

NO. S-20

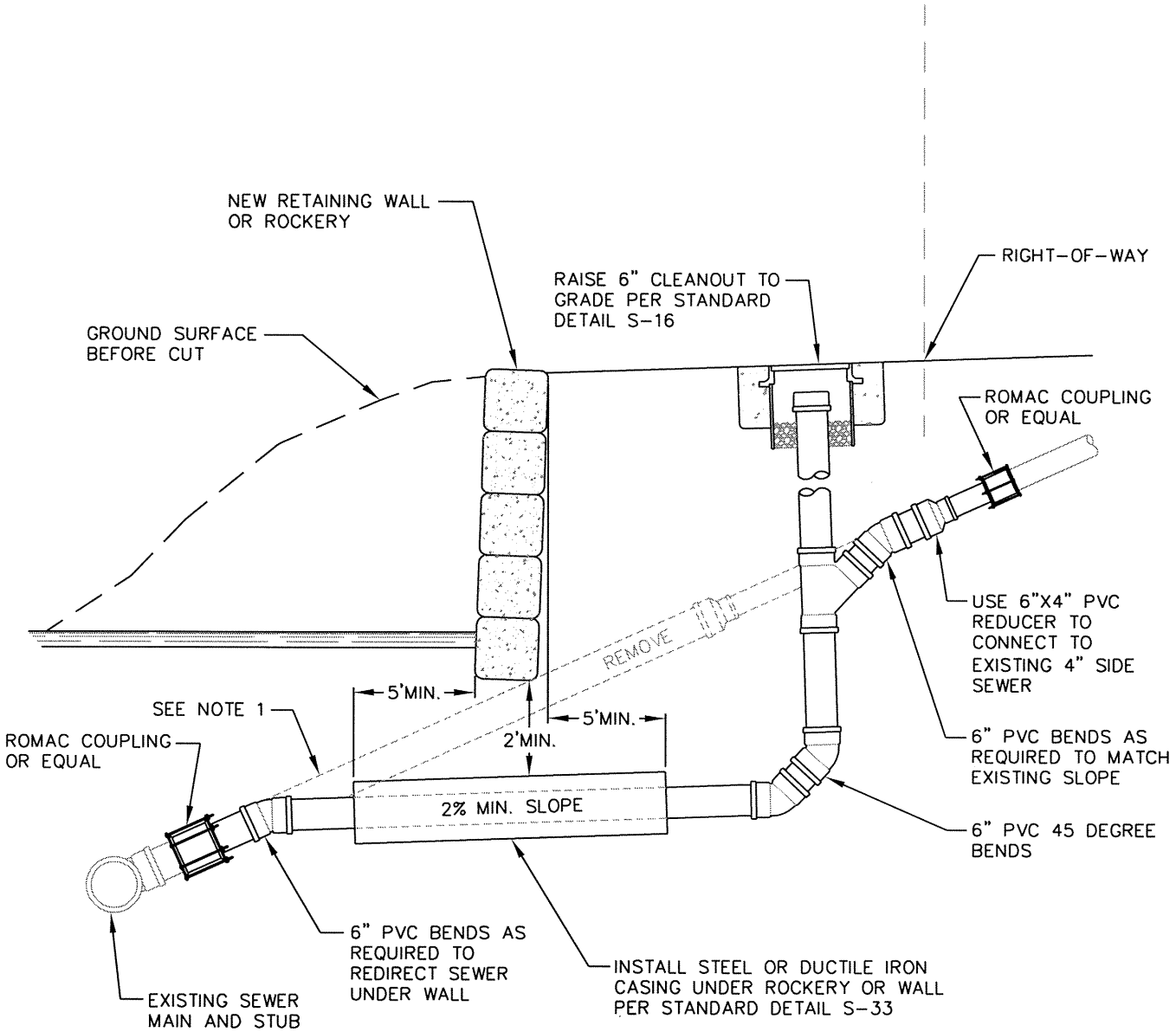

NOTES:

1. REPLACE ANY EXISTING 4" SIDE SEWER WITH 6" PVC AND TO EXTEND TO THE EDGE OF RIGHT-OF-WAY. REMOVE AND DISPOSE OF ANY EXISTING PIPE THAT IS NOT REUSED.
2. RELOCATE SIDE SEWER ONLY WHERE REQUIRED BY ROADWAY CUT.
3. CONNECT TO EXISTING SIDE SEWER AND MAIN STUB WITH ROMAC COUPLINGS OR EQUAL.

City of Bellevue

SEWER UTILITIES

TITLE

SIDE SEWER RELOCATION

JANUARY 2008

NO SCALE

NO. S-21

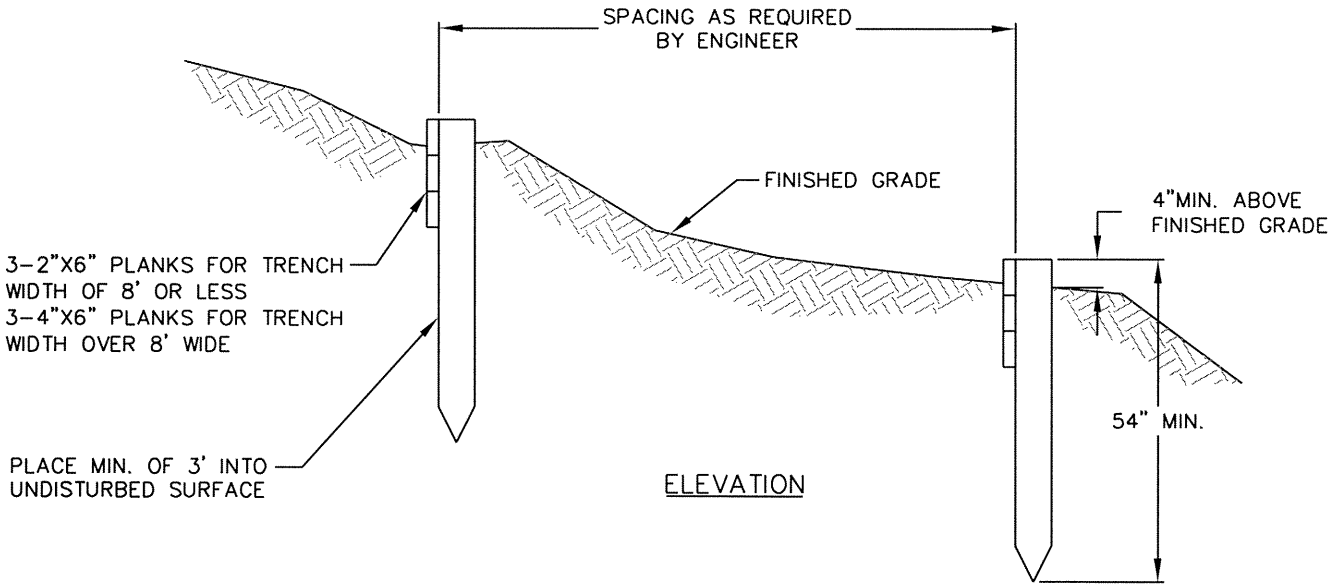

ELEVATION

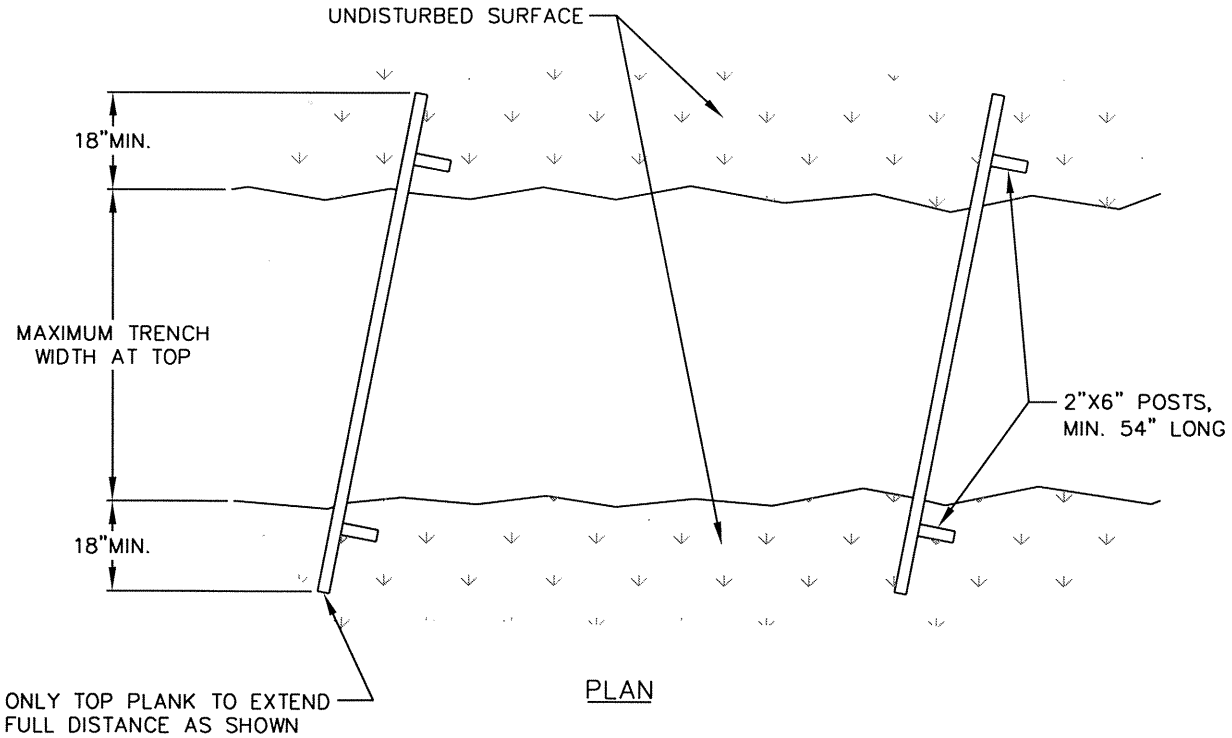

PLAN

City of Bellevue

SEWER UTILITIES

TITLE

TIMBER BAFFLE/HILL HOLDER

JANUARY 2008

NO SCALE

NO. S-22

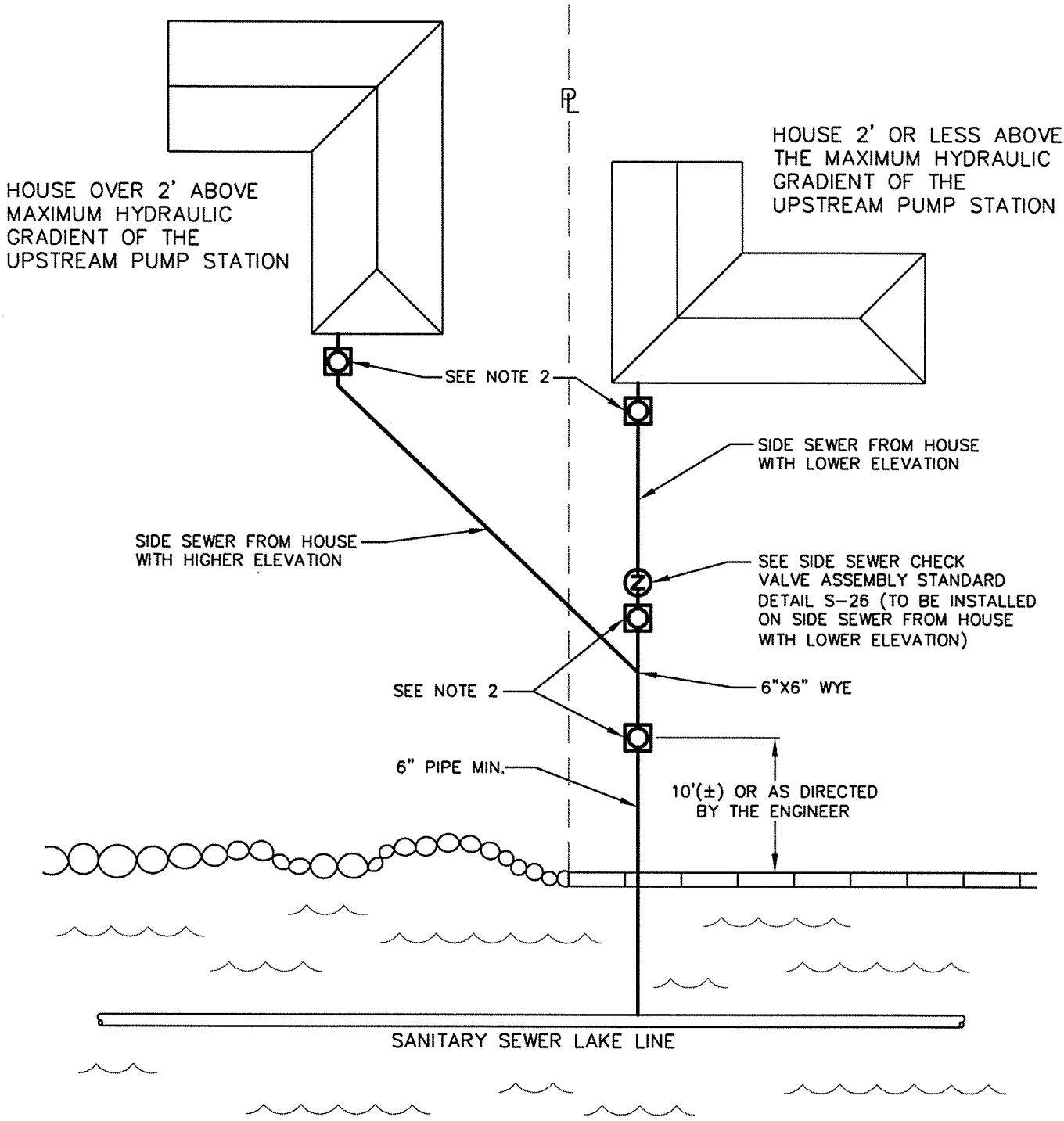

NOTES:
1. CHECK VALVE ASSEMBLY IS PRIVATE AND SHALL BE THE PROPERTY OWNERS RESPONSIBILITY TO MAINTAIN.
2. ALL CLEANOUTS SHALL BE INSTALLED TO GRADE PER STANDARD DETAIL S-25.

City of Bellevue

SEWER UTILITIES

TITLE
LAKE LINE CLEANOUT AND CHECK VALVE ASSEMBLY INSTALLATION

JANUARY 2008

NO SCALE

NO. S-23

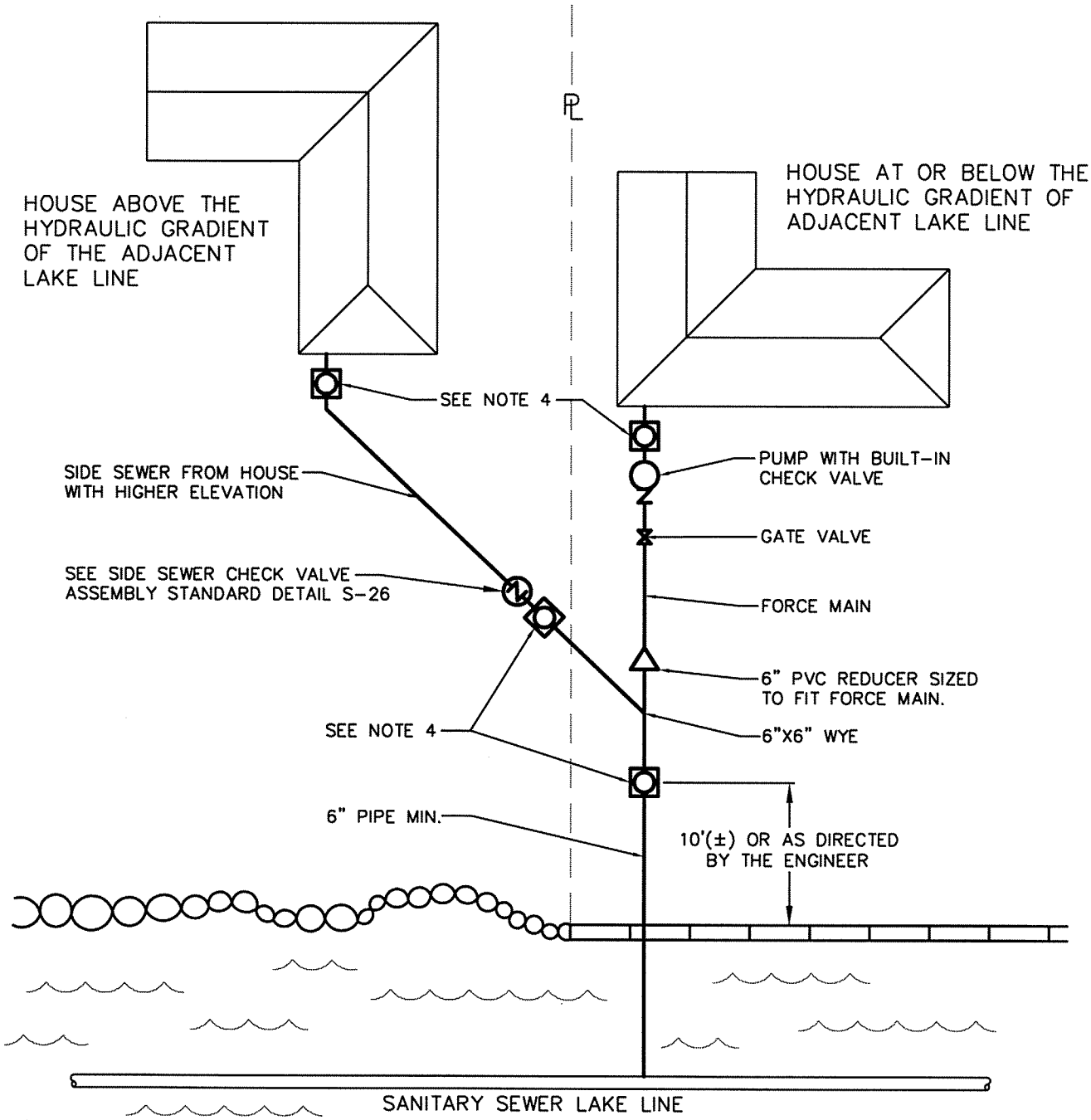

NOTES:

1. PUMP SHALL NOT BE CONNECTED TO A SEPTIC TANK OF ANY SIZE.
2. CHECK VALVES AND PUMP ASSEMBLIES ARE PRIVATE AND SHALL BE THE PROPERTY OWNERS RESPONSIBILITY TO MAINTAIN.
3. PUMP BASIN SYSTEM SHALL BE DESIGNED BY THE PUMP MANUFACTURER.
4. ALL CLEANOUTS SHALL BE INSTALLED TO GRADE PER STANDARD DETAIL S-25.
5. FORCE MAIN TO 6" GRAVITY STUB CONNECT MUST BE MADE WITH PVC REDUCER, NOT FLEXIBLE COUPLING.
6. FORCE MAIN TESTING SHALL BE IN ACCORDANCE WITH SECTION S5-15 OF THE STANDARDS.

City of Bellevue

SEWER UTILITIES

TITLE

LAKE LINE CLEANOUT AND CHECK VALVE ASSEMBLY INSTALLATION AT OR BELOW HYDRAULIC GRADIENT NO. S-24

JANUARY 2008

NO SCALE

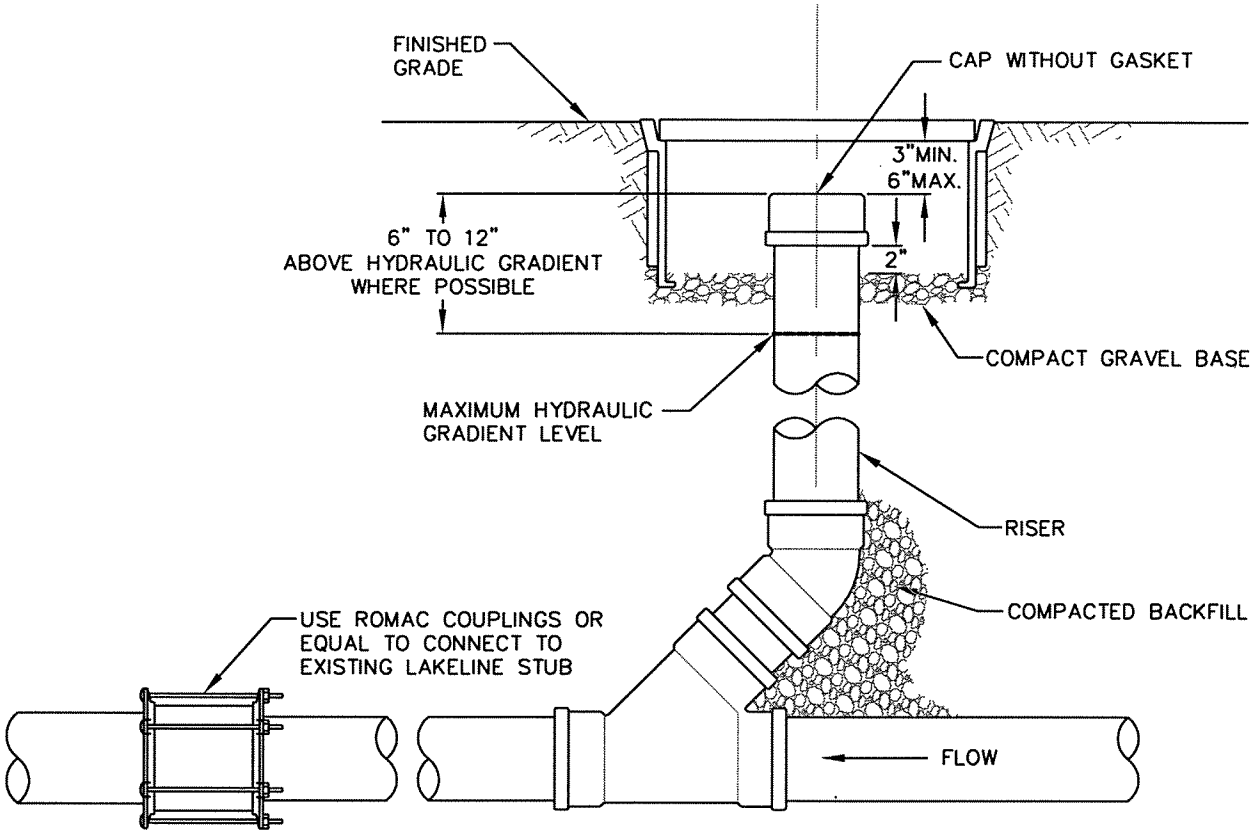

C.O. PIPE DIAMETER	PIPE MATERIAL	CAP STYLE	MID-STATES PLASTIC BOX	HYDRAULIC GRADIENT LEVEL
4"	P.V.C.	ALL PLASTIC MECHANICAL SEWER PLUG	MSBCF-1118-18XL	BELOW GRADIENT
4"	P.V.C.	P.V.C. CAP WITHOUT GASKET	MSBCF-1118-18XL	ABOVE GRADIENT
6"	P.V.C.	ALL PLASTIC MECHANICAL SEWER PLUG	MSBCF-1324-12	BELOW GRADIENT
6"	P.V.C.	P.V.C. CAP WITHOUT GASKET	MSBCF-1324-12	ABOVE GRADIENT
6"	D.I.	MECHANICAL JOINT CAP	MSBCF-1324-12	ABOVE GRADIENT
8"	P.V.C.	P.V.C. CAP WITHOUT GASKET	MSBCF-1730-12	ABOVE GRADIENT
8"	D.I.	MECHANICAL JOINT CAP	MSBCF-1730-12	ABOVE GRADIENT

NOTES:

1. CLEANOUT SHALL BE INSTALLED TO GRADE AND LOCATED 6" TO 12" ABOVE THE HYDRAULIC GRADIENT OF THE LAKE LINE WHEREVER POSSIBLE.
2. CLEANOUT SHALL ALSO BE LOCATED TO PROVIDE EASY ACCESS FOR INSPECTION AND MAINTENANCE.
3. FOR CLEANOUT ENCLOSURE USE MID-STATES PLASTIC METER BOX OR EQUAL. THE COVER FOR THE PLASTIC BOX SHALL BE DUCTILE IRON AND READ "SEWER", OR BE BLANK (NO LABEL).

JANUARY 2008 NO SCALE

City of Bellevue

SEWER UTILITIES

TITLE

CLEANOUT TO GRADE FOR LAKE LINE CONNECTION

NO. S-25

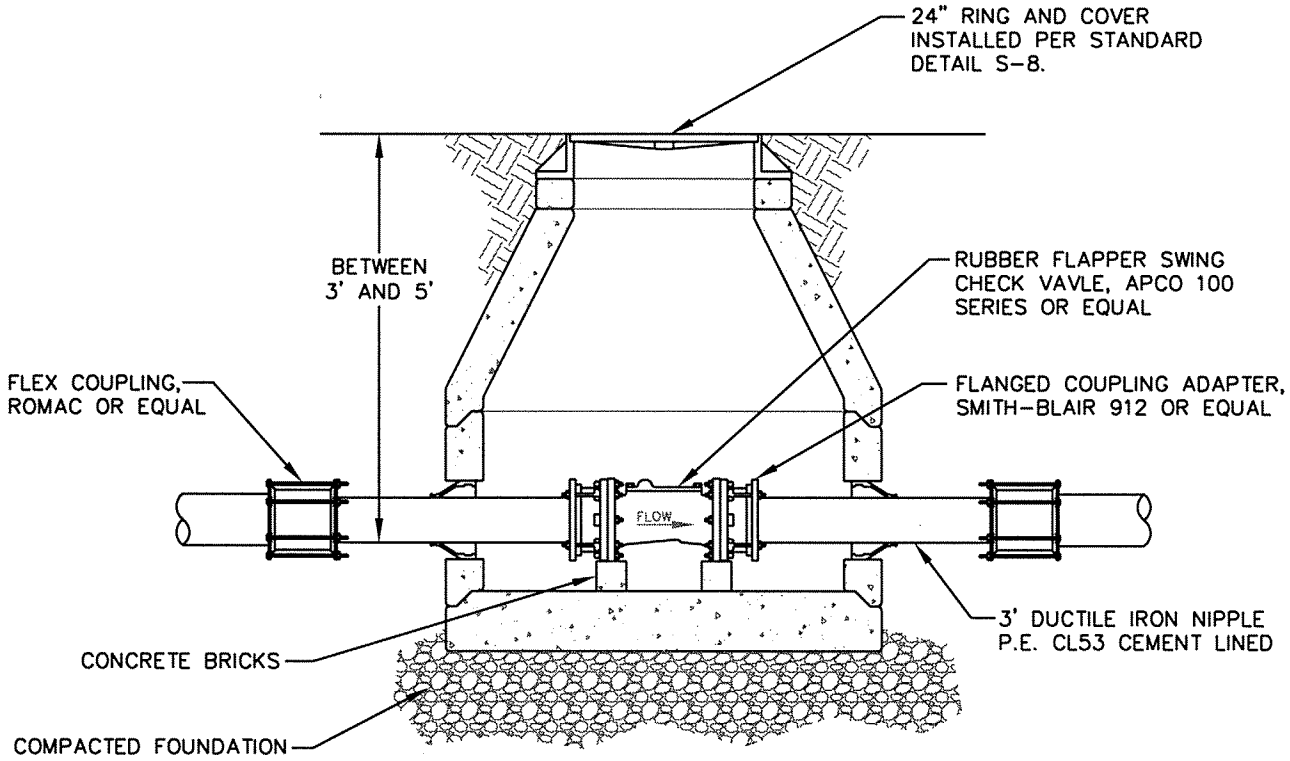

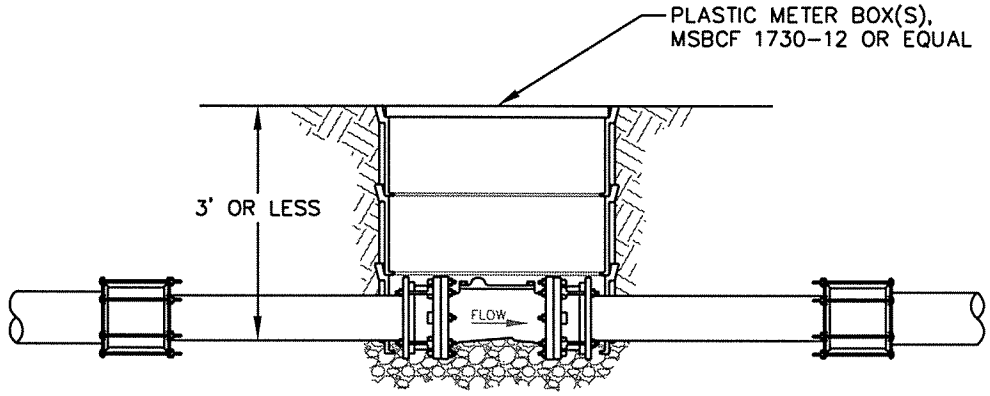

NOTES:

1. WHERE DEPTH OF PIPE INVERT IS LESS THAN 3 FEET, USE PLASTIC METER FOR VALVE CHAMBER (MID STATES PLASTIC MODEL MSBCF 1730-12 OR EQUAL). THE COVER FOR THE PLASTIC BOX SHALL BE DUCTILE IRON AND READ "SEWER", OR BE BLANK (NO LABEL).
   STACK 2 OR 3 BOXES AS NECESSARY.
2. WHERE DEPTH OF PIPE INVERT IS BETWEEN 3 FEET AND 5 FEET, USE CONCENTRIC CONE CONCRETE MANHOLE PER STANDARD DETAIL S-6.
3. WHERE DEPTH OF PIPE INVERT IS GREATER THAN 5 FEET, USE STANDARD ECCENTRIC CONCRETE MANHOLE PER STANDARD DETAIL S-1.

City of Bellevue

SEWER UTILITIES

TITLE

CHECK VALVE ASSEMBLY FOR JOINT USE SIDE SEWER (4" TO 8" DIAMETER)

NO. S-26

JANUARY 2008

NO SCALE

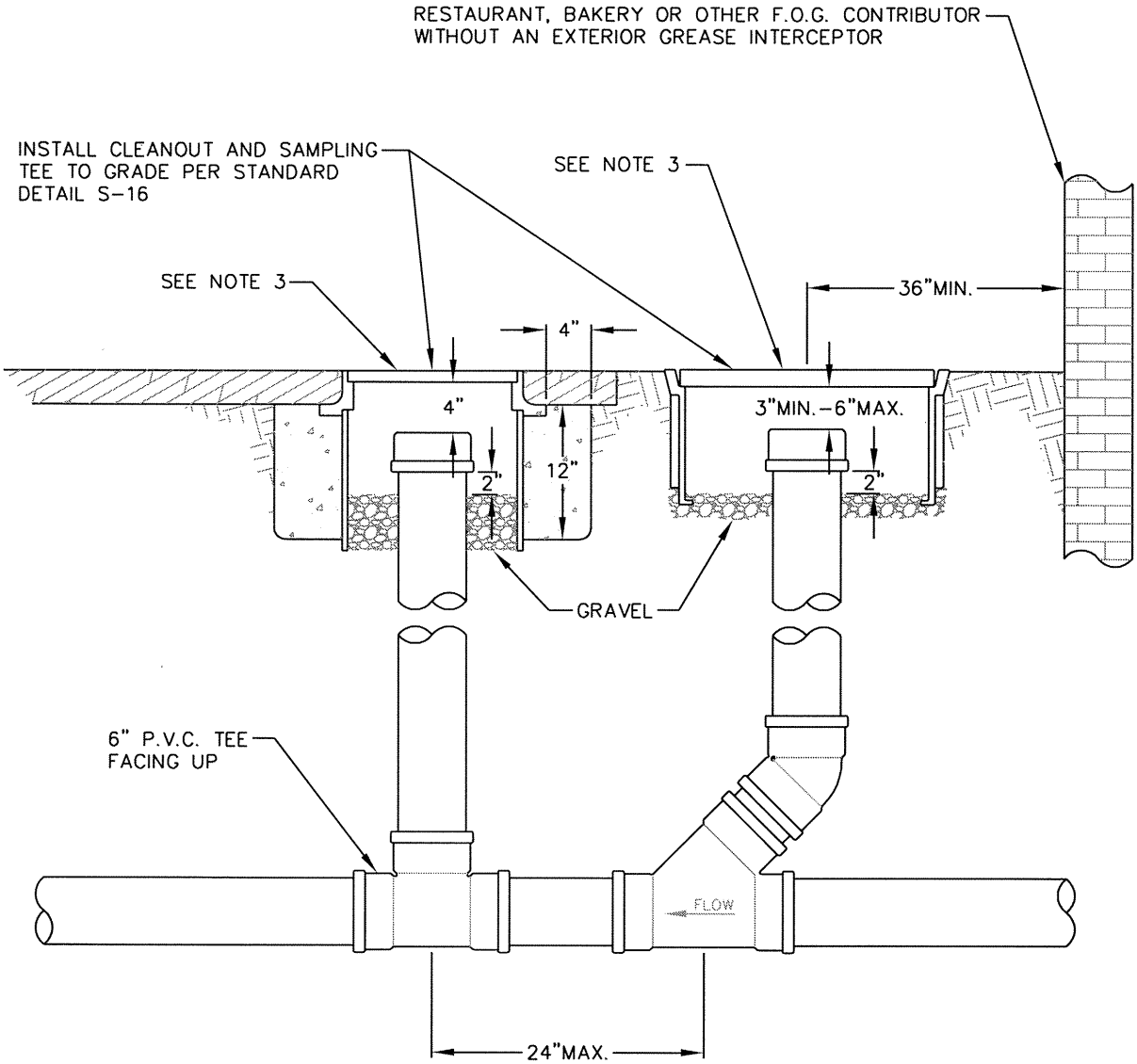

NOTES:

1. ONLY FOR USE ON PROPERTIES THAT DO NOT HAVE AN EXTERIOR GREASE INTERCEPTOR.
2. INSTALL SAMPLING TEE ON EXISTING OR NEW SIDE SEWER.
3. FOR PAVED AREAS USE 14" BOLT-LOCKING RING AND COVER EQUAL TO INLAND FOUNDRY NUMBER 209 OR 210.
   FOR UNPAVED AREAS USE MID-STATES PLASTIC BOX MODEL MSBCF-1118-18XL OR EQUAL. THE COVER FOR THE PLASTIC BOX SHALL BE DUCTILE IRON AND READ "SEWER", OR BE BLANK (NO LABEL).

City of Bellevue

SEWER UTILITIES

TITLE

SAMPLING TEE

JANUARY 2008

NO SCALE

NO. S-27

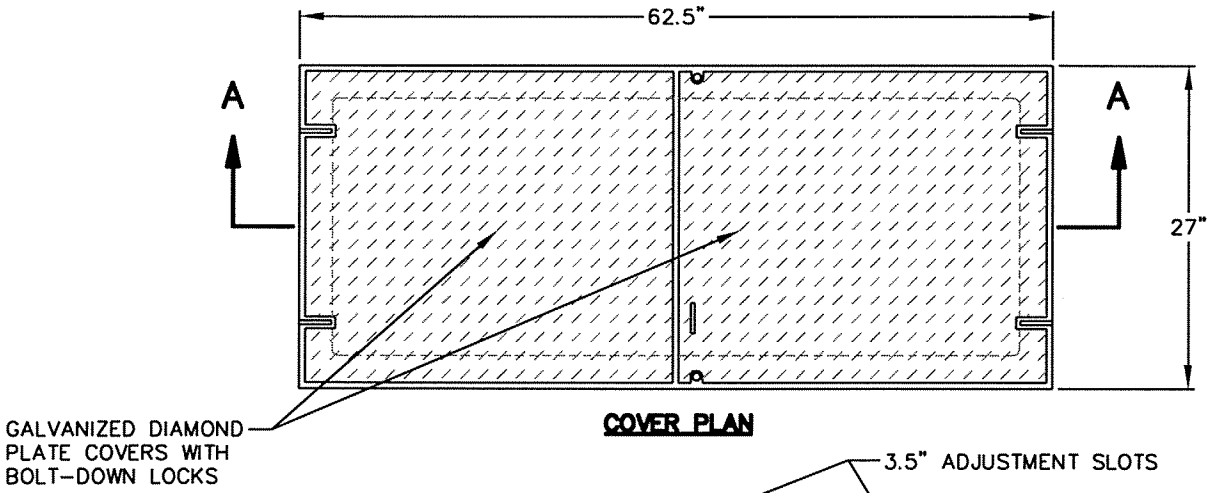

COVER PLAN

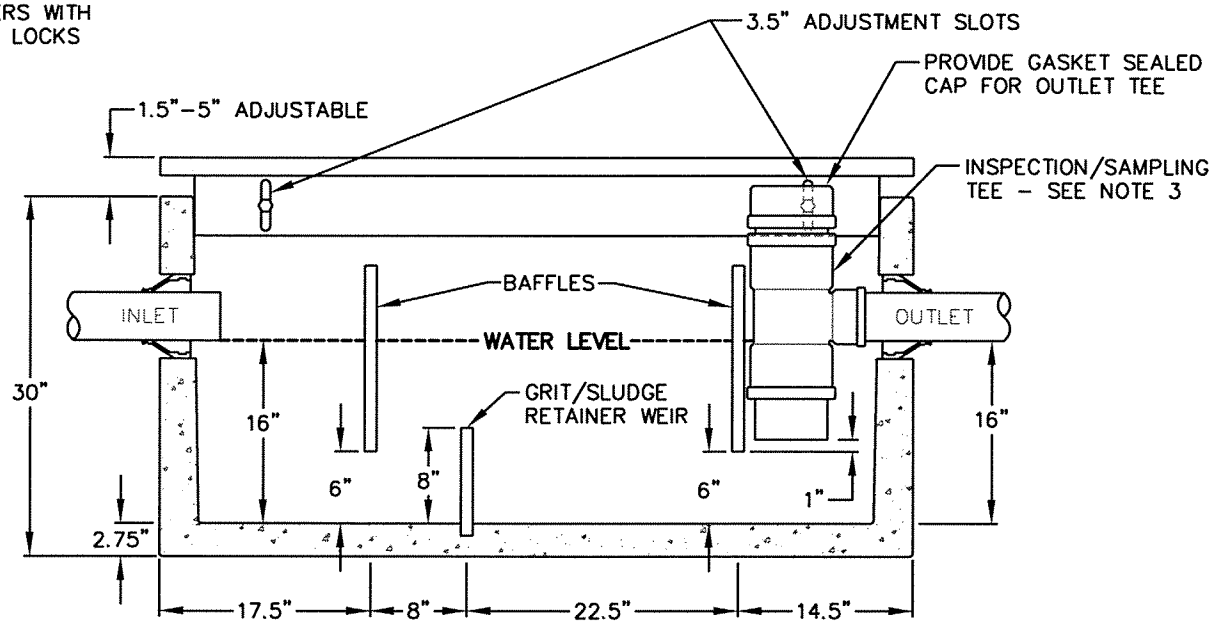

SECTION AA

NOTES:

1. USE UTILITY VAULT COMPANY INC. MODEL #25-SA OR EQUAL. PRECAST VAULT SHALL HAVE KNOCKOUTS AT ALL PIPE OPENINGS. IF KNOCKOUTS ARE NOT PRESENT, THEN PIPE OPENINGS SHALL BE CORE-DRILLED. PIPE OPENINGS SHALL BE 2" LARGER THAN THE PIPE DIAMETER.
2. LOCATE VAULT WITHIN 20' OF DRIVE FOR ACCESS BY MAINTENANCE VEHICLES.
3. P.V.C INSPECTION AND SAMPLING TEE SHALL BE THE SAME SIZE AS THE OUTLET PIPE FOR 6" OUTLET OR GREATER. USE 6" BY OUTLET-SIZE TEE WHERE OUTLET PIPE SIZE IS LESS THAN 6". INSTALL GASKETED CAP ON TOP OF THE SAMPLING TEE.
4. FILL WITH CLEAN WATER PRIOR TO START-UP OF THE SYSTEM.
5. GRAY AND BLACK WATER SHALL BE CARRIED BY SEPARATE SIDE SEWER.
6. PIPE CONNECTION TO VAULT: KOR-N-SEAL OR EQUAL FOR CORE-DRILLED OPENINGS, OR SAND COLLAR FOR KNOCKOUT OPENING. SEAL ALL PIPE CONNECTIONS WITH NONSHRINK GROUT.
7. INTERIOR OIL/WATER SEPARATORS SHALL HAVE VENTING PER UNIFORM PLUMBING CODE REQUIREMENTS.

City of Bellevue

SEWER UTILITIES

TITLE

100 GALLON BAFFLE TYPE OIL/WATER SEPARATOR

JANUARY 2008

NO SCALE

NO. S-28

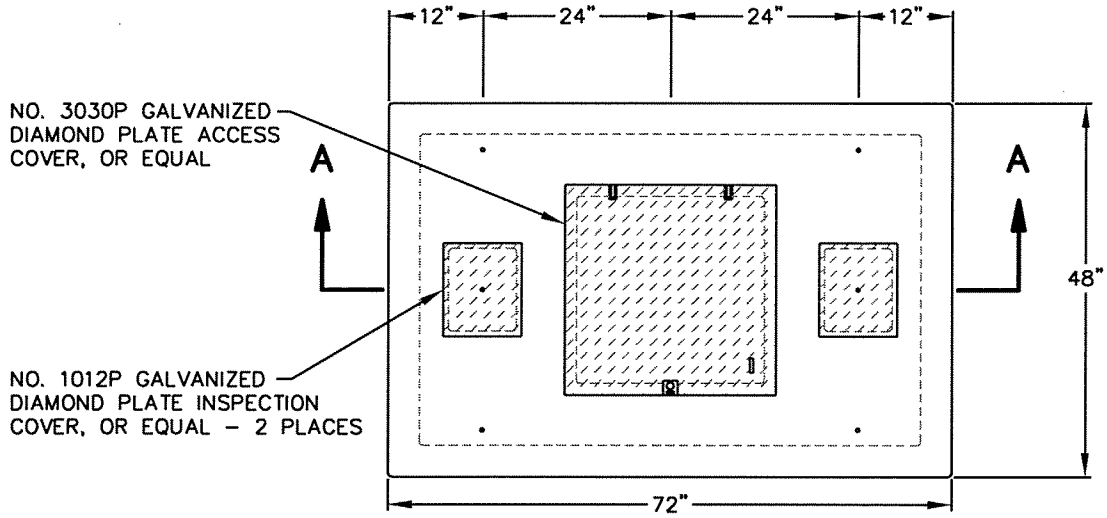

COVER PLAN

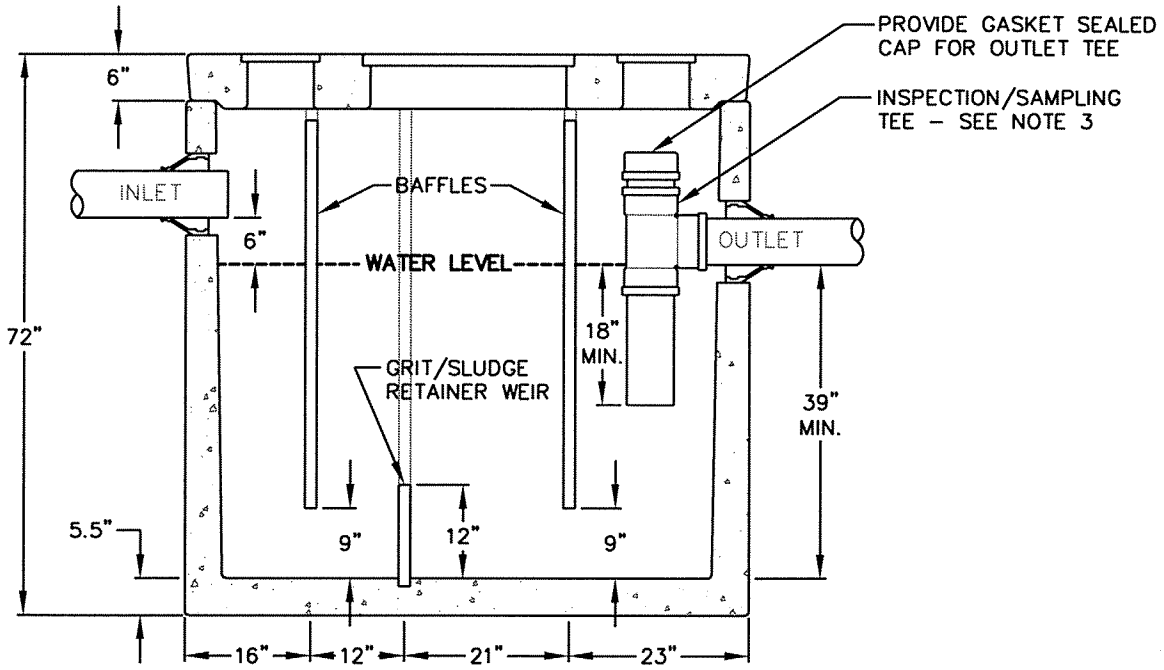

SECTION AA

NOTES:

1. USE UTILITY VAULT COMPANY INC. MODEL #660-SA OR EQUAL. PRECAST VAULT SHALL HAVE KNOCKOUTS AT ALL PIPE OPENINGS. IF KNOCKOUTS ARE NOT PRESENT, THEN PIPE OPENINGS SHALL BE CORE-DRILLED. PIPE OPENINGS SHALL BE 2" LARGER THAN THE PIPE DIAMETER.
2. LOCATE VAULT WITHIN 20' OF DRIVE FOR ACCESS BY MAINTENANCE VEHICLES.
3. P.V.C INSPECTION AND SAMPLING TEE SHALL BE THE SAME SIZE AS THE OUTLET PIPE FOR 6" OUTLET OR GREATER. USE 6" P.V.C. TEE WHERE OUTLET PIPE SIZE IS LESS THAN 6". INSTALL GASKETED CAP ON TOP OF THE SAMPLING TEE.
4. FILL WITH CLEAN WATER PRIOR TO START-UP OF THE SYSTEM.
5. GRAY AND BLACK WATER SHALL BE CARRIED BY SEPARATE SIDE SEWER.
6. PIPE CONNECTION TO VAULT: KOR-N-SEAL OR EQUAL FOR CORE-DRILLED OPENINGS, OR SAND COLLAR FOR KNOCKOUT OPENING. SEAL ALL PIPE CONNECTIONS WITH NONSHRINK GROUT.
7. INTERIOR OIL/WATER SEPARATORS SHALL HAVE VENTING PER UNIFORM PLUMBING CODE REQUIREMENTS.

City of Bellevue

SEWER UTILITIES

TITLE

450 GALLON BAFFLE TYPE OIL/WATER SEPARATOR

JANUARY 2008

NO SCALE

NO. S-29

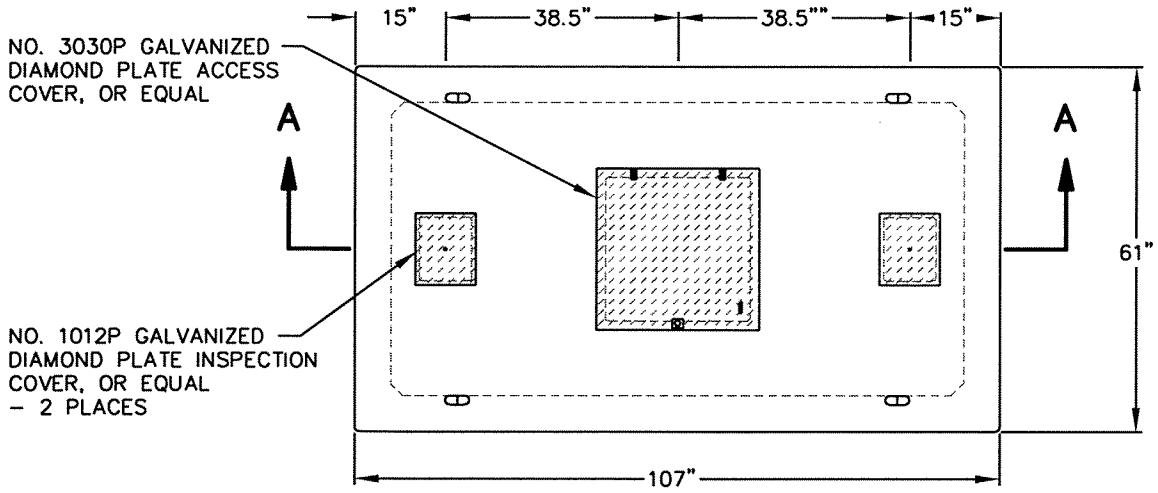

COVER PLAN

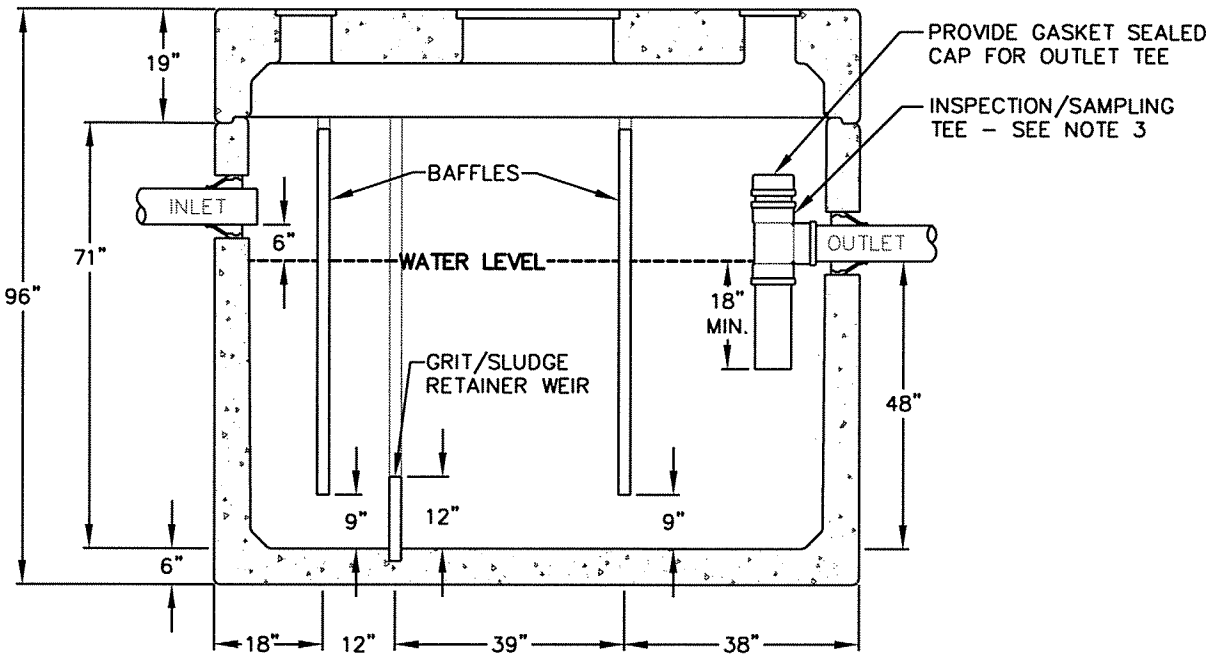

SECTION AA

NOTES:

1. USE UTILITY VAULT COMPANY INC. MODEL #48-SA OR EQUAL. PRECAST VAULT SHALL HAVE KNOCKOUTS AT ALL PIPE OPENINGS. IF KNOCKOUTS ARE NOT PRESENT, THEN PIPE OPENINGS SHALL BE CORE-DRILLED. PIPE OPENINGS SHALL BE 2" LARGER THAN THE PIPE DIAMETER.
2. LOCATE VAULT WITHIN 20' OF DRIVE FOR ACCESS BY MAINTENANCE VEHICLES.
3. P.V.C SAMPLING TEE SHALL BE THE SAME SIZE AS THE OUTLET PIPE FOR 6" OUTLET OR GREATER. USE 6" P.V.C. TEE WHERE OUTLET PIPE SIZE IS LESS THAN 6". INSTALL GASKETED CAP ON TOP OF THE SAMPLING TEE.
4. FILL WITH CLEAN WATER PRIOR TO START-UP OF THE SYSTEM.
5. GRAY AND BLACK WATER SHALL BE CARRIED BY SEPARATE SIDE SEWER.
6. PIPE CONNECTION TO VAULT: KOR-N-SEAL OR EQUAL FOR CORE-DRILLED OPENINGS, OR SAND COLLAR FOR KNOCKOUT OPENING. SEAL ALL PIPE CONNECTIONS WITH NONSHRINK GROUT.
7. INTERIOR OIL/WATER SEPARATORS SHALL HAVE VENTING PER UNIFORM PLUMBING CODE REQUIREMENTS.

City of Bellevue

SEWER UTILITIES

TITLE

1000 GALLON BAFFLE TYPE OIL/WATER SEPARATOR

JANUARY 2008

NO SCALE

NO. S-30

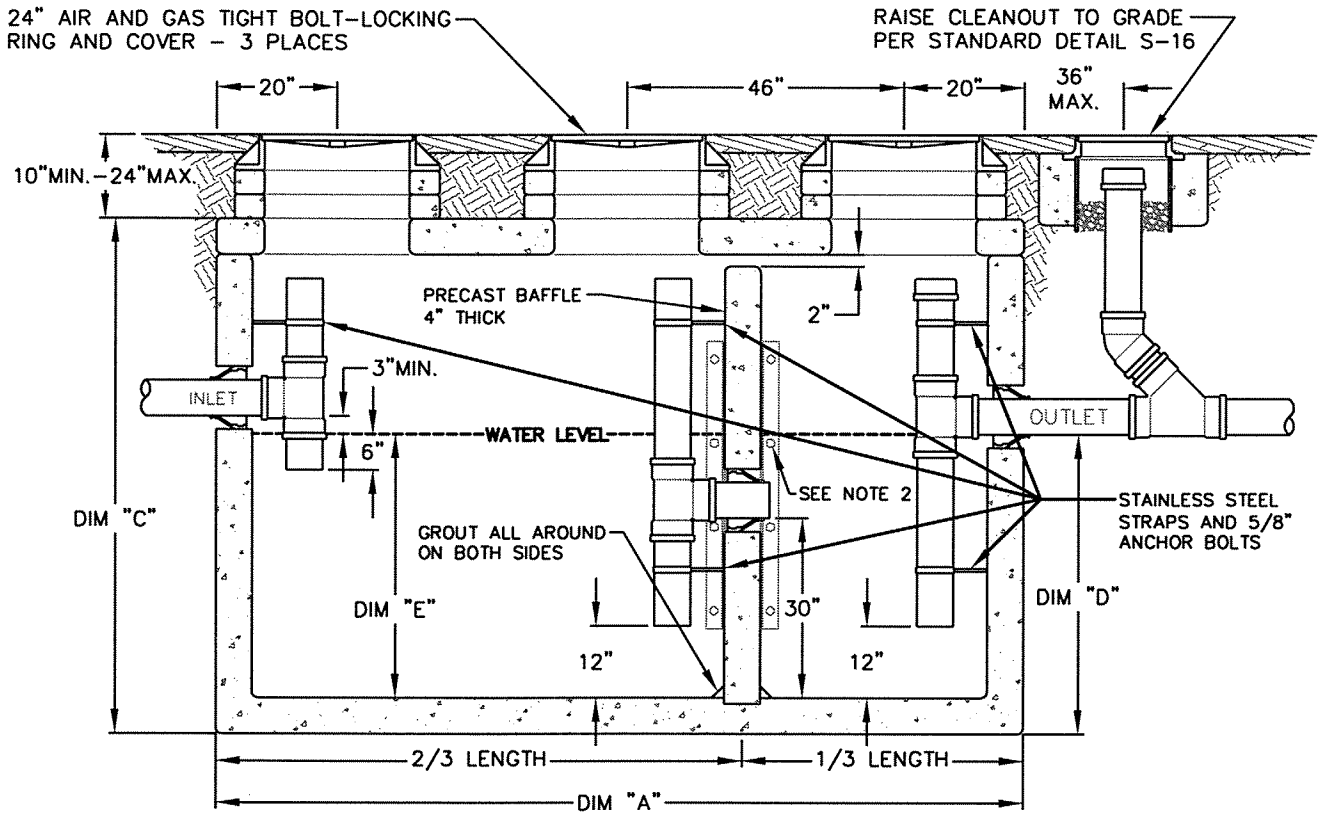

GALLON CAPACITY		600	750	1000	1500	2000	2500	3000	4000	5000	6000
UV CO. MODEL No.		577-GA	577-GA	4484-GA	5106-GA	612-GA	612-GA	712-GA	712-GA	818-GA	818-GA
LENGTH	DIM "A"	7'-0"	7'-0"	9'-0"	11'-2"	12'-8"	12'-8"	15'-7"	15'-7"	19'-11"	19'-11"
WIDTH	DIM "B"	4'-8"	4'-8"	5'-0"	5'-8"	6'-8"	6'-8"	9'-7"	9'-7"	9'-11"	9'-11"
HEIGHT	DIM "C"	7'-0"	7'-0"	7'-2"	7'-2"	8'-0"	8'-0"	8'-6 1/2"	8'-6 1/2"	8'-11"	10'-5"
	DIM "D"	3'-6"	4'-3"	4'-2"	4'-4"	4'-7"	5'-6"	5'-0"	6'-3"	6'-2"	7'-2"
WATER DEPTH	DIM "E"	3'-2"	3'-11"	3'-10"	4'-0"	3'-10"	4'-9"	3'-9"	5'-0"	4'-9"	5'-9"

NOTES:

1. USE UTILITY VAULT COMPANY INC. PRECAST CONCRETE VAULT OR EQUAL. SEE CHART ABOVE FOR DIMENSIONS REQUIRED FOR EACH GALLON CAPACITY. PRECAST VAULT SHALL HAVE KNOCKOUTS AT ALL PIPE OPENINGS. IF KNOCKOUTS ARE NOT PRESENT, THEN PIPE OPENINGS SHALL BE CORE-DRILLED. PIPE OPENINGS SHALL BE 2" LARGER THAN THE PIPE DIAMETER.
2. IF VAULT IS NOT SLOTTED TO ACCEPT PRECAST CONCRETE BAFFLE THEN BAFFLE SHALL BE HELD IN PLACE BY (2) 3"X3"X3/8" ANGLE 4FT. LONG ON EACH SIDE. ALL 4 PIECES OF ANGLE SHALL BE HELD IN PLACE WITH 4 - 1/2" BOLTS WITH WASHERS SPACED 14" ON CENTER. ANGLE AND FASTENERS SHALL BE STAINLESS STEEL OR GALVANIZED AND ASPHALT COATED.
3. LOCATE VAULT WITHIN 20' OF DRIVE FOR ACCESS BY MAINTENANCE VEHICLES.
4. P.V.C INSPECTION AND SAMPLING TEE SHALL BE THE SAME SIZE AS THE OUTLET PIPE FOR 6" OUTLET OR GREATER. USE 6" P.V.C. TEE WHERE OUTLET PIPE SIZE IS LESS THAN 6". INSTALL GASKETED CAP ON TOP OF THE SAMPLING TEE.
5. POSITION RISERS BELOW ACCESS OPENINGS TO ALLOW CLEAR ACCESS TO RISER AND VAULT CHAMBER.
6. ALL RINGS AND COVERS SHALL BE AIR AND GAS TIGHT BOLT-LOCKING TYPE, RATED FOR H20 LOAD MINIMUM.
7. FOR 1000 GALLON INTERCEPTOR, SUBSTITUTE 12" RING AND COVER FOR "CENTER MANHOLE". LOCATE 12" RING AND COVER DIRECTLY ABOVE TEE AND RISER.
8. FOR 600 AND 700 GALLON INTERCEPTOR, SUBSTITUTE 30" RING AND COVER FOR THE TWO 24" MANHOLES LOCATED AT THE OUTLET END OF THE VAULT. CENTER OF 30" RING AND COVER SHALL BE LOCATED 2 FT. FROM THE OUTLET FACE OF VAULT,
9. FILL WITH CLEAN WATER PRIOR TO START-UP OF THE SYSTEM.
10. GRAY WATER ONLY. BLACK WATER SHALL BE CARRIED BY SEPARATE SIDE SEWER.
11. PIPE CONNECTION TO VAULT: KOR-N-SEAL OR EQUAL FOR CORE-DRILLED OPENINGS, OR SAND COLLAR FOR KNOCKOUT OPENING. SEAL ALL PIPE CONNECTIONS WITH NONSHRINK GROUT.
12. INTERIOR GREASE INTERCEPTORS SHALL HAVE VENTING PER UNIFORM PLUMBING CODE REQUIREMENTS.

JANUARY 2008 NO SCALE

City of Bellevue

SEWER UTILITIES

TITLE

GREASE INTERCEPTOR

NO. S-31

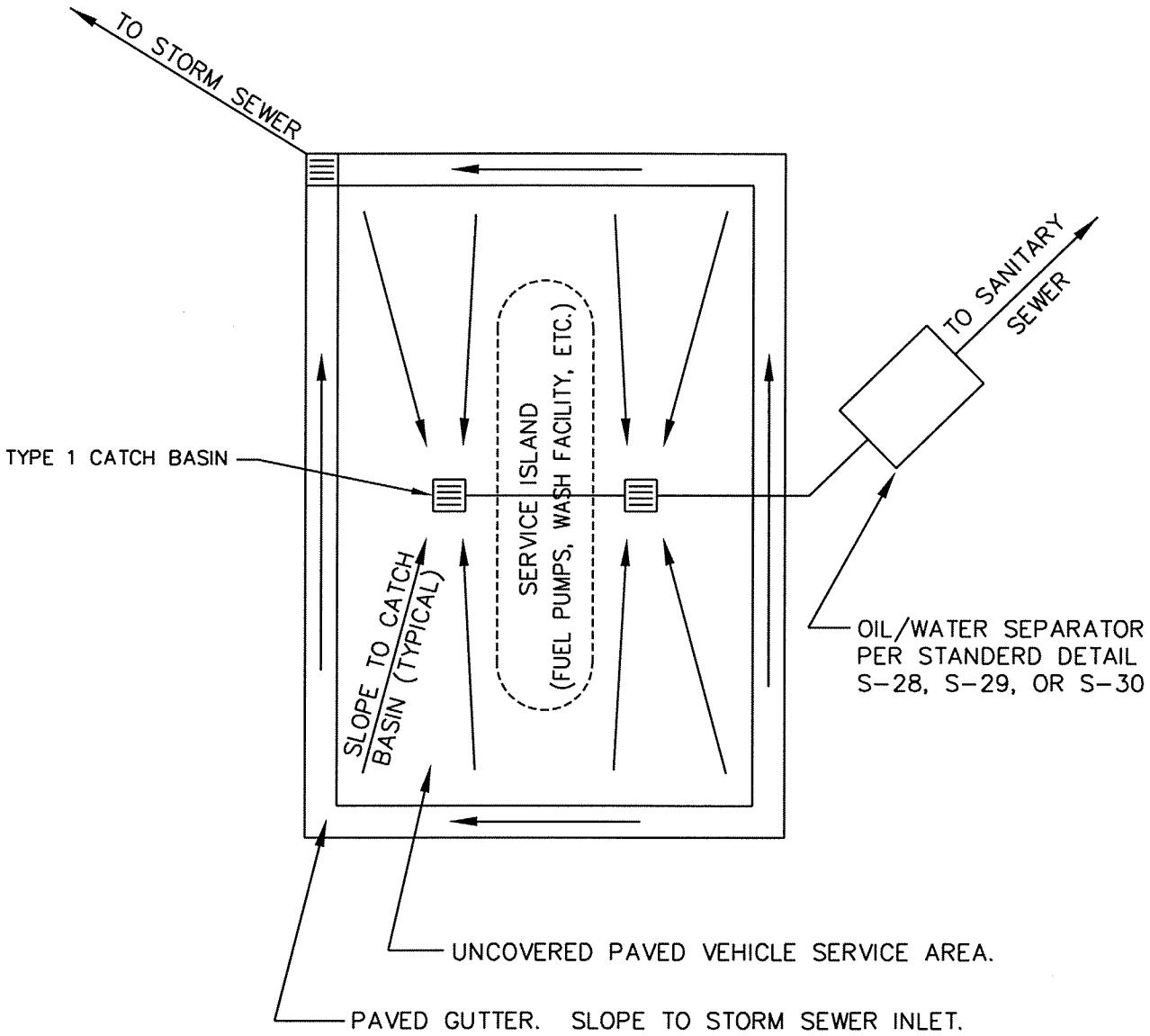

NOTES:

1. UNCOVERED AREA GRADED TO DRAIN TO SANITARY SEWER SHALL NOT EXCEED 200 SQ. FT. AREAS OVER 200 SQ. FT. REQUIRE A ROOF, WITH ROOF DRAINING TO STORM SYSTEM.
2. GUTTER NOT REQUIRED WHERE SURROUNDING GRADE DRAINS AWAY FROM SERVICE AREA.

City of Bellevue

SEWER UTILITIES

TITLE

UNCOVERED PAVED VEHICLE SERVICE AREA DRAINAGE

JANUARY 2008

NO SCALE

NO. S-32

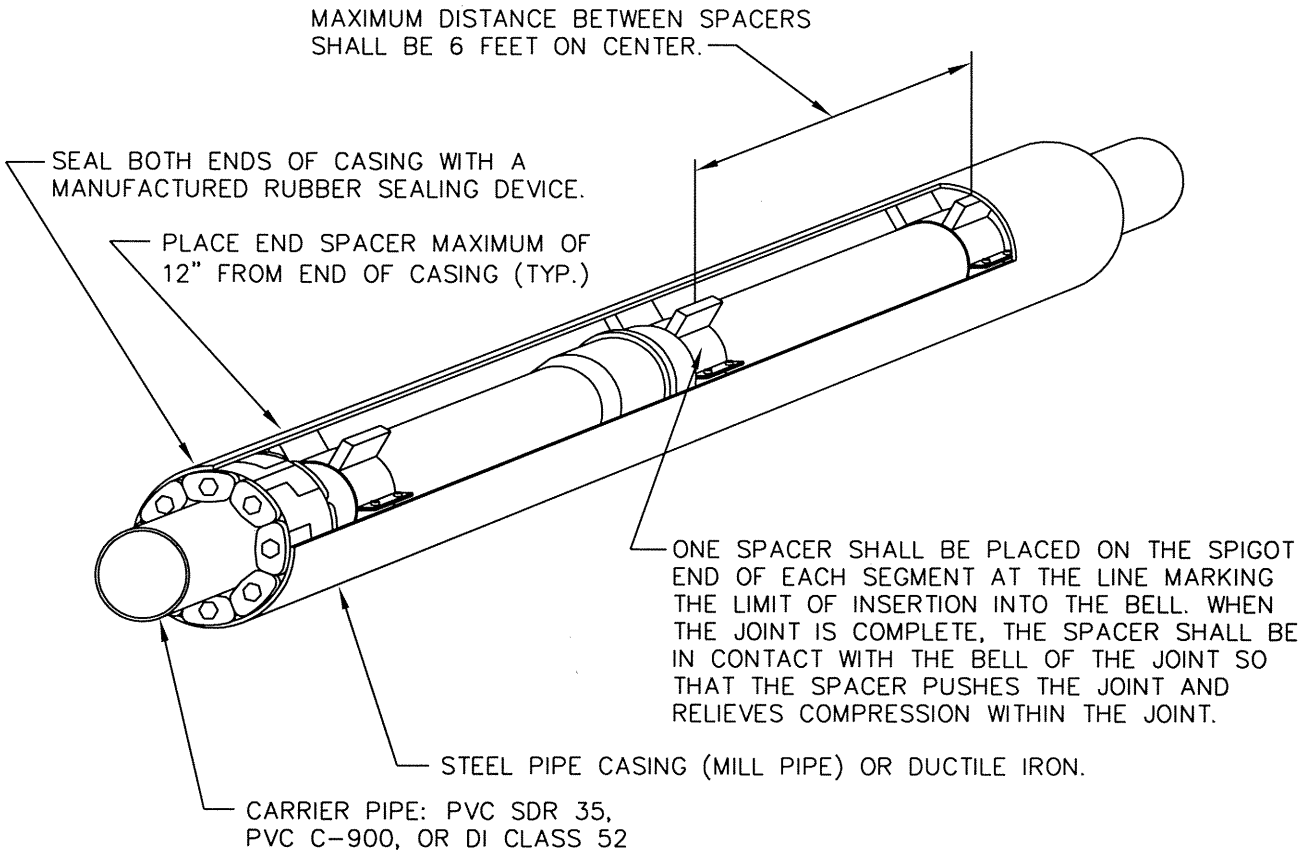

CARRIER PIPE DIAMETER	4"	6"	8"	10"	12"
CASING DIAMETER	10"	12"	14"	16"	20"
STEEL CASING THICKNESS	0.25"	0.25"	0.25"	0.25"	0.25"
SPACER BAND WIDTH	8"	8"	8"	8"	8"

NOTES:

1. CASING SPACERS SHALL BE "CENTER POSITIONING" TYPE.
2. FOR CASING SPACERS SPECS SEE S4-24.
3. MINIMUM RUNNER WIDTH SHALL BE 2 INCHES.
4. RUNNER HEIGHT SHALL BE SIZED TO PROVIDE:
   A. MINIMUM 0.75" BETWEEN CARRIER PIPE BELL AND CASING PIPE WALL AT ALL TIMES.
   B. MINIMUM 1" CLEARANCE BETWEEN RUNNERS AND TOP OF CASING WALL TO PREVENT JAMMING DURING INSTALLATION.
5. STEEL CASING DIAMETERS ARE "OUTSIDE DIAMETER" FOR 16" AND LARGER.
6. SPACER BAND WIDTH SHALL BE 12" FOR CARRIER PIPES THAT ARE 36" DIAMETER OR GREATER
7. CASING ANTICORROSIVE COATING THICKNESS - 8 MILLS DFT

City of Bellevue

SEWER UTILITIES

TITLE

CASING INSTALLATION

JANUARY 2008

NO SCALE

NO. S-33

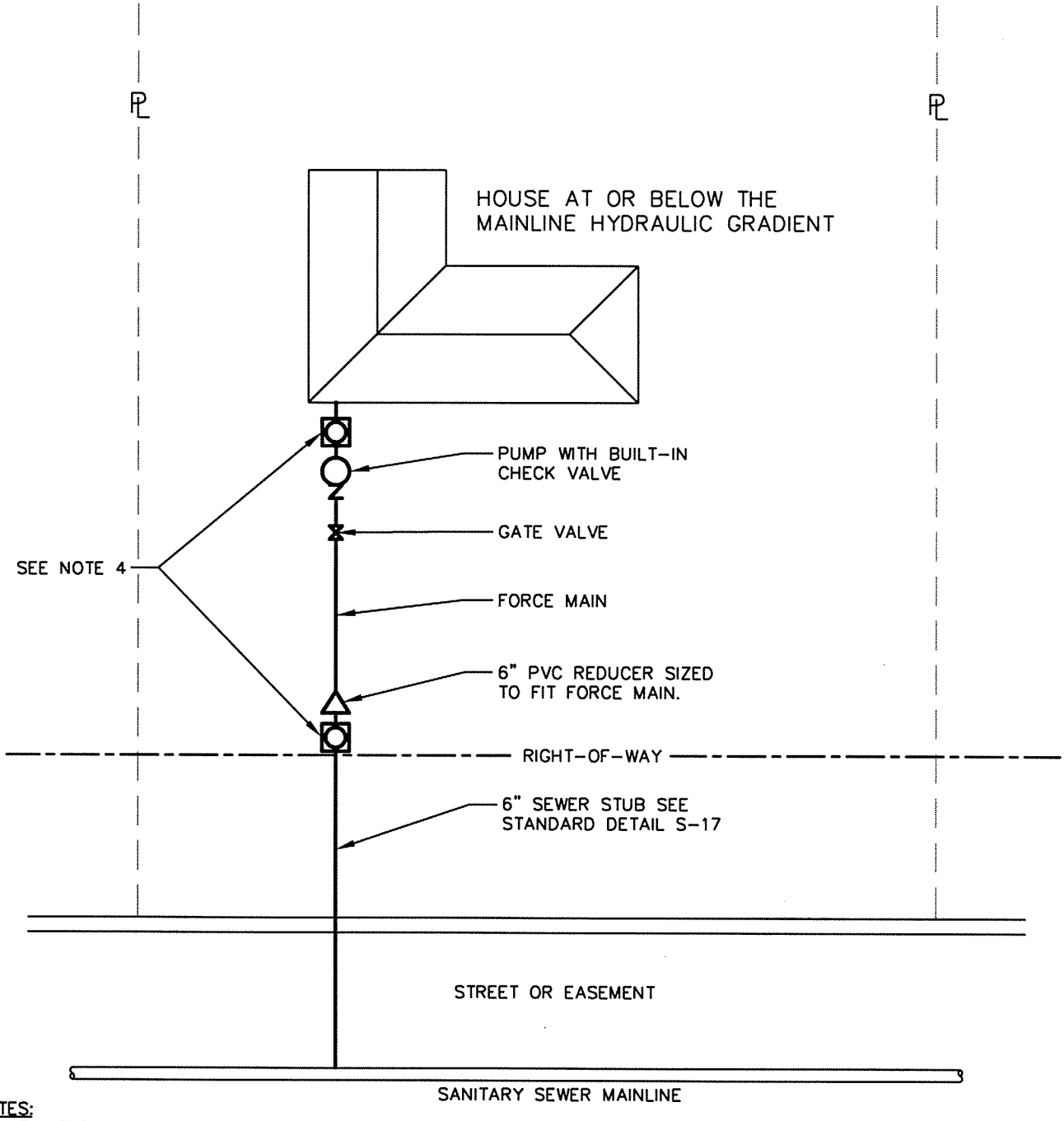

NOTES:

1. PUMP SHALL NOT BE CONNECTED TO A SEPTIC TANK OF ANY SIZE.
2. CHECK VALVES AND PUMP ASSEMBLIES ARE PRIVATE AND SHALL BE THE PROPERTY OWNERS RESPONSIBILITY TO MAINTAIN.
3. PUMP BASIN SYSTEM SHALL BE DESIGNED BY THE PUMP MANUFACTURER.
4. ALL CLEANOUTS SHALL BE INSTALLED TO GRADE PER STANDARD DETAIL S-16 EXCEPT CLEANOUTS ON LINES CONNECTING TO LAKE LINE WHICH SHALL BE PER STANDARD DETAIL S-25.
5. FORCE MAIN TO 6" GRAVITY STUB CONNECT MUST BE MADE WITH PVC REDUCER, NOT FLEXIBLE COUPLING.
6. FORCE MAIN TESTING SHALL BE IN ACCORDANCE WITH SECTION S5-15 OF THE STANDARDS.

City of Bellevue

SEWER UTILITIES

TITLE

SINGLE HOME SEWER PUMP SYSTEM

JANUARY 2008

NO SCALE

NO. S-34

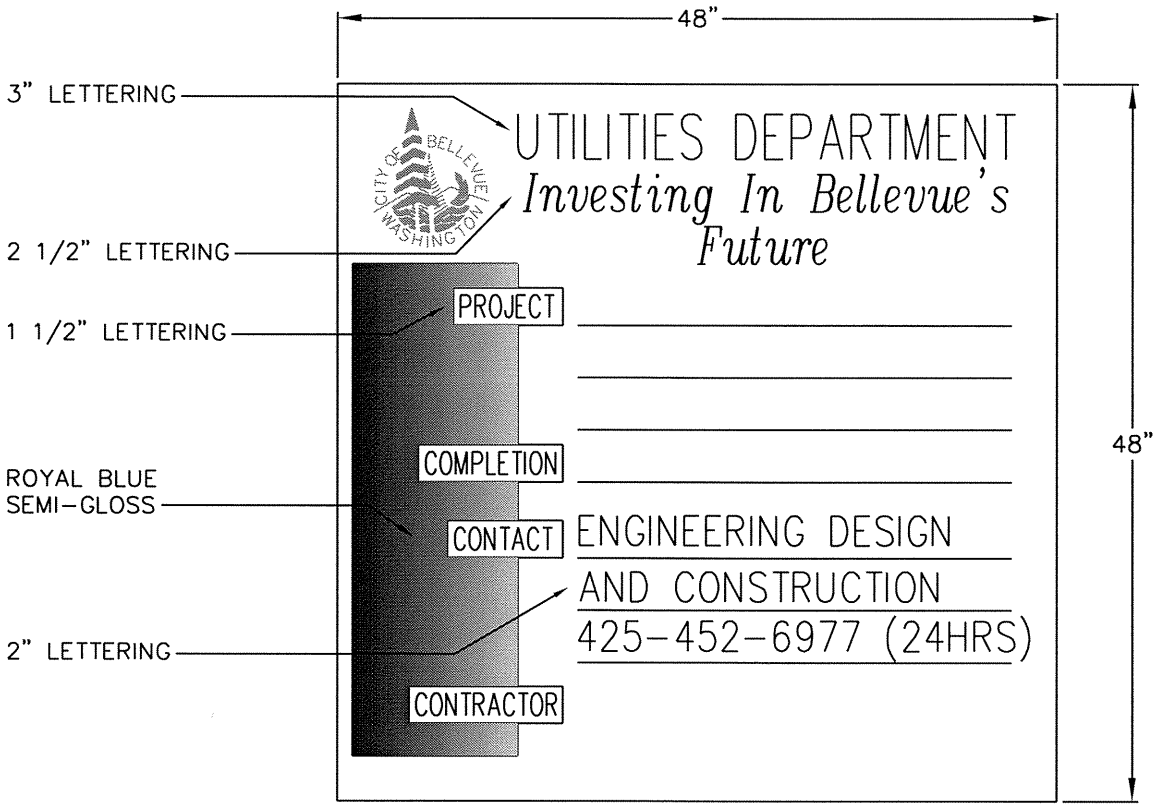

NOTES:

1. SIGN MATERIAL: 5/8" EXTERIOR PLYWOOD, PAINTED WHITE (GLOSS OR SEMI-GLOSS).
2. LETTERING: BLACK VINYL OR SEMI-GLOSS PAINT.
3. CONTRACTOR SHALL INSTALL PROJECT SIGN(S) ON 4X4 WOOD POSTS AT THE LOCATION(S) SHOWN ON THE PLANS OR AS DIRECTED BY THE ENGINEER.
4. CONTRACTOR SHALL PROVIDE A WHITE VINYL DECAL WITH 2" BLACK LETTERING LISTING THE CONTRACTORS NAME AND BUSINESS TELEPHONE NUMBER.

City of Bellevue

SEWER UTILITIES

TITLE

PROJECT SIGN

JANUARY 2008

NO SCALE

NO. S-35

APPENDIX S-2

DRAFTING STANDARDS

WATER SYMBOLS .....PAGE 1

SANITARY/STORM SEWER SYMBOLS .....PAGE 2

SURVEY SYMBOLS.....PAGE 3

SURFACE FEATURES/LANDSCAPE SYMBOLS.....PAGE 4

SIGNALIZATION SYMBOLS.....PAGE 5

CHANNELIZATION SYMBOLS .....PAGE 7

GAS/POWER/TELEPHONE SYMBOLS .....PAGE 8

SURFACE FEATURES LINE TYPES .....PAGE 9

SURVEY LINE TYPES .....PAGE 10

UTILITIES LINE TYPES .....PAGE 11

TEXT STYLES.....PAGE 12

NOTES.....PAGE 12

WATER SYMBOLS

SYMBOL EXIST.	SYMBOL PROP.	DESCRIPTION	BLOCK	LAYER
		ADAPTER, FL. x M.J.	WAFM/SAME	WA–FITT–3333–SYM
		BENDS:		
		90 DEGREE BEND, FL.	W90F/SAME	WA–FITT–3333–SYM
		45 DEGREE BEND, FL.	W45F/SAME	WA–FITT–3333–SYM
		22.5 DEGREE BEND, FL.	W22F/SAME	WA–FITT–3333–SYM
		11.25 DEGREE BEND, FL.	W11F/SAME	WA–FITT–3333–SYM
		90 DEGREE BEND, M.J.	W90M/SAME	WA–FITT–3333–SYM
		45 DEGREE BEND, M.J.	W45M/SAME	WA–FITT–3333–SYM
		22.5 DEGREE BEND, M.J.	W22M/SAME	WA–FITT–3333–SYM
		11.25 DEGREE BEND, M.J.	W11M/SAME	WA–FITT–3333–SYM
		VERTICAL BEND, FL.	WVTF/SAME	WA–FITT–3333–SYM
		VERTICAL BEND, M.J.	WVTM/SAME	WA–FITT–3333–SYM
		REDUCERS:		
		REDUCER, FL.	WRF/WRFP	WA–FITT–3333–SYM
		REDUCER, M.J.	WRM/WRMP	WA–FITT–3333–SYM
		REDUCER, M.J. x FL.	WRMF/WRMFP	WA–FITT–3333–SYM
		REDUCER, M.J. x P.E.	WRMB/WRMBP	WA–FITT–3333–SYM
		REDUCER, P.E. x M.J./FL. x M.J.	WRBM/WRBMP	WA–FITT–3333–SYM
		TEES:		
		TAPPING TEE & VALVE, FL. x M.J.	WTTM/WTTMP	WA–VALV–3333–SYM
		TEE, FL.	WTF/SAME	WA–FITT–3333–SYM
		TEE, M.J.	WTM/SAME	WA–FITT–3333–SYM
		TEE, M.J. x FL.	WTMF/SAME	WA–FITT–3333–SYM
		VALVES:		
		BUTTERFLY VALVE, FL.	WBFV/WBFVP	WA–VALV–3333–SYM
		BUTTERFLY VALVE, FL. x M.J.	WBVFM/WBVFMP	WA–VALV–3333–SYM
		BUTTERFLY VALVE, M.J.	WBVM/WBVMP	WA–VALV–3333–SYM
		GATE VALVE, FL.	WGV/WGVP	WA–VALV–3333–SYM
			SAME – INDICATES USE SAME BLOCK FOR PROPOSED.	3333–USE EXST/PRO

American Public Works Association Washington State Chapter

City of Bellevue

WATER SYMBOLS

SYMBOL EXIST.	SYMBOL PROP.	DESCRIPTION	(ABBR)	BLOCK	LAYER
		GATE VALVE, FL. x M.J.		WGVFM/WGVFMP	WA–VALV–3333–SYM
		GATE VALVE, M.J.		WGVM/WGVMP	WA–VALV–3333–SYM
		AIR RELIEF VALVE	(AIR)	WARV/WARVP	WA–VALV–3333–SYM
		BLOW–OFF VALVE	(BO)	WBOV/WBOVP	WA–VALV–3333–SYM
		CHECK VALVE	(CK)	WCKV/WCKVP	WA–VALV–3333–SYM
		PLUG VALVE	(PV)	WPV/WPVP	WA–VALV–3333–SYM
		CAP/PLUG		WCAP	WA–FITT–3333–SYM
		COUPLING	(CPL)	WCOUP/WCOUPP	WA–FITT–3333–SYM
		GUARD POST	(GP)	WGP/WGPP	WA–FITT–3333–SYM
		REDUCER	(RED)	WRED/WREDP	WA–FITT–3333–SYM
		THRUST BLOCK	(TB)	WTB/WTBP	WA–FITT–3333–SYM
		WATER METER	(WM)	WMET/WMETP	WA–METR–3333–SYM
		FIRE HYDRANTS:			
		2–PORT	(FH)	WFH2/WFH2P	WA–FHYD–3333–SYM
		3–PORT	(FH)	WFH3/WFH3P	WA–FHYD–3333–SYM
		JOINTS:			
		FLANGE/BLIND FL	(FL)/(BL FL)	WFL	WA–FITT–3333–SYM
		MECHANICAL	(MJ)	WMJ	WA–FITT–3333–SYM
		PUSH–ON/HUB		WHUB	WA–FITT–3333–SYM
		THREAD	(THD)	WTH	WA–FITT–3333–SYM

3333 – USE EXST/PROP

SANITARY/STORM SEWER SYMBOLS

SYMBOL EXIST.	SYMBOL PROP.	DESCRIPTION	(ABBR)	BLOCK	LAYER
		SAN. SEWER CLEAN OUT	(CO)	SSCO/SSCOP	SS–STCR–3333–SYM
		SAN. SEWER MANHOLE	(SSMH)	SSMH/SSMHP	SS–STCR–3333–SYM
		STORM DRAIN CATCH BASIN	(CB)	SDCB/SDCBP	SD–STCR–3333–SYM
		STORM DRAIN CULVERT	(CULV)	SDC/SDCP	SD–GLIN–3333–SYM
		STORM DRAIN MANHOLE	(SDMH)	SDMH/SDMHP	SD–STCR–3333–S

3333 – USE EXST/PR

American Public Works Association Washington State Chapter

City of Bellevue

SURVEY SYMBOLS

SYMBOL THEOR./ EXIST.	SYMBOL FOUND/ PROP.	DESCRIPTION	(ABBR)	BLOCK	LAYER
		ANGLE POINT	(AP)	SAP/SAPP	SV–CTRL–3333–SYM
		BENCH MARK	(BM)	SBM/SBMP	SV–CTRL–3333–SYM
		BLOCK CORNER	(BC)	SBC/SBCP	SV–CTRL–3333–SYM
		IRON PIPE	(IP)	SIP/SIPP	SV–CTRL–3333–SYM
		MONUMENT (IN CASE)	(MIC)	SMIC/SMICP	SV–CTRL–3333–SYM
		MONUMENT (SURFACE)	(MON)	SMON/SMONP	SV–CTRL–3333–SYM
		OWNERSHIP TIE	(OT)	SOT	SV–LOTN–3333–SYM
		SECTION DATA:			
		SECTION CENTER		SSCT	SV–SECT–3333–SYM
		SECTION CORNER		SSC/SSCP	SV–SECT–3333–SYM
		QUARTER CORNER		SQC/SQCP	SV–QSCT–3333–SYM
		SIXTEENTH CORNER		SSXC/SSXCP	SV–16ST–3333–SYM
		CLOSING CORNER		SCC/SCCP	SV–222A–3333–SYM
MC	MC	MEANDER CORNER	(MC)	SMC/SMCP	SV–222A–3333–SYM
WC	WC	WITNESS CORNER	(WC)	SWC/SWCP	SV–SECT–3333–SYM
		SOIL BORING	(SB)	SSB/SSBP	SV–SOIL–3333–SYM
		SPOT ELEVATION	(SE)	SSE/SSEP	SV–CTRL–3333–SYM
		TAX LOT / PARCEL NUMBER		STLN	SV–222B–3333–SYM

222A – USE RANG/SECT/TWNS
222B – USE PRCL/LOTN
3333 – USE EXST/PROP OR FOUN/THEO

BLOCK: SNA

LAYER: SV–NORA–3333–SYM

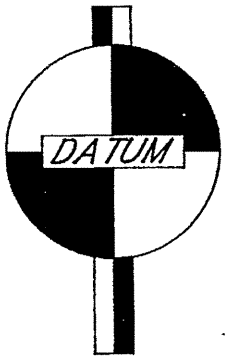

BLOCK: SDAT

LAYER: SV–DATM–3333–SYM

American Public Works Association Washington State Chapter

City of Bellevue

SURFACE FEATURES/LANDSCAPING

SYMBOL EXIST.	SYMBOL PROP.	DESCRIPTION	BLOCK	LAYER
BUS	BUS	BUS STOP	SFBS/SFBSP	SF–BUSS–3333–SYM
		EMBANKMENT	SFB/SFBP	SF–EMBT–3333–SYM
		MAIL BOX	SFMB/SFMBP	SF–MAIL–3333–SYM
		RIP RAP	SFRR/SFRRP	SF–RIPR–3333–SYM
		ROCKERY	SFR/SFRP	SF–ROCK–3333–SYM
		SHRUB	SFS/SFSP	SF–VEGE–3333–SYM
		SIGN	SFSN/SFSNP	SF–SIGN–3333–SYM
		TREE (Conifer)	SFC/SFCP	SF–VEGE–3333–SYM
		TREE (Deciduous)	SFD/SFDP	SF–VEGE–3333–SYM
		YARD LIGHT	SFL/SFLP	SF–LITE–3333–SYM

3333 – USE EXST/PROP

SIGNALIZATION SYMBOLS

SYMBOL EXIST.	SYMBOL PROP.	DESCRIPTION	BLOCK	LAYER
		AERIAL DISCONNECT	TAD/TADP	TF–SIGL–3333–SYM
		AERIAL TERMINAL COMPARTMENT	TATC/TATCP	TF–SIGL–3333–SYM
		DETECTORS:		
		DIPOLE DETECTOR	TDD/TDDP	TF–SIGL–3333–SYM
		QUADRAPOLE DETECTOR	TQD/TQDP	TF–SIGL–3333–SYM
		PEDESTRIAN DETECTOR	TPD/TPDP	TF–SIGL–3333–SYM
		EMERGENCY VEHICLE INDICATOR LIGHTS:		
		INDICATOR LIGHTS	TIL/TILP	TF–SIGL–3333–SYM
		OPTICOM SENSOR	TOS/TOSP	TF–SIGL–3333–SYM
		OPTICOM SENSOR W/ INDICATOR LIGHTS	TOSL/TOSLP	TF–SIGL–3333–SYM
		FLASHING WARNING SYSTEM	TFWS/TFWSP	TF–SIGL–3333–SYM
		JUNCTION BOX (TYPE I, II, III)	TJB1/TJB1P TJB2/TJB2P TJB3/TJB3P	TF–SIGL–3333–SYM TF–SIGL–3333–SYM TF–SIGL–3333–SYM
		PEDESTRIAN PUSHBUTTON POST W/ PUSHBUTTON	TPB/TPBP	TF–SIGL–3333–SYM
		PEDESTRIAN SIGNAL HEAD	TPSH/TPSHP	TF–SIGL–3333–SYM
		POLE NOTE	TPN	TF–SIGL–3333–SYM
		R/R CROSSING GATE	TRG/TRGP	TF–SIGL–3333–SYM
		R/R CROSSING SIGNAL	TRC/TRCP	TF–SIGL–3333–SYM

3333–USE EXST/PRO

American Public Works Association Washington State Chapter

City of Bellevue

SIGNALIZATION SYMBOLS

SYMBOL EXIST.	SYMBOL PROP.	DESCRIPTION	BLOCK	LAYER
		SIGNAL CONTROLLER	TSC/TSCP	TF-SIGL-3333-SYM
		SIGNAL LOAD CENTER	TSLC/TSLCP	TF-SIGL-3333-SYM
		STREET LIGHT ASSEMBLY	TSLA/TSLAP	TF-SIGL-3333-SYM
		TRAFFIC SIGNS:		
		BRIDGE	TSB/TSBP	TF-SIGN-3333-SYM
		CANTILEVERED	TSCL/TSCLP	TF-SIGN-3333-SYM
		SINGLE POST	TSS/TSSP	TF-SIGN-3333-SYM
		DOUBLE POST	TSD/TSDP	TF-SIGN-3333-SYM
		TRAFFIC SIGNAL POLE	TPOL/TPOLP	TF-SIGL-3333-SYM
		TRAFFIC SIGNAL POLE W/ LUMINAIRE	TSPL/TSPLP	TF-SIGL-3333-SYM
		TRAFFIC SIGNAL SUPPORT POLE	TSPOL/TSPOLP	TF-SIGL-3333-SYM
		VEHICLE SIGNAL HEAD	TVH/TVHP	TF-SIGL-3333-SYM
		VEHICLE SIGNAL HEAD W/ARROW INDICATOR	TVHA/TVHAP	TF-SIGL-3333-SYM
		WIRE NOTE	TWN	TF-SIGL-3333-SYM

3333 – USE EXST/PROP

American Public Works Association Washington State Chapter

City of Bellevue

CHANNELIZATION SYMBOLS

SYMBOL EXIST.	SYMBOL PROP.	DESCRIPTION	BLOCK	LAYER
		BIKE PATH	CB/CBP	TF–CHAN–3333–SYM
		HANDICAP SYMBOL	CHS/CHSP	TF–CHAN–3333–SYM
		H.O.V. LANE SYMBOL	CHOV/CHOVP	TF–CHAN–3333–SYM
ONLY	ONLY	ONLY	CO/COP	TF–CHAN–3333–SYM
RXR	RXR	RAILROAD CROSSING	CRR/CRRP	TF–CHAN–3333–SYM
SCHOOL	SCHOOL	SCHOOL	CSC/CSCP	TF–CHAN–3333–SYM
STOP	STOP	STOP	CS/CSP	TF–CHAN–3333–SYM
		LANE CONTROL ARROWS: STRAIGHT ARROW	CSA/CSAP	TF–CHAN–3333–SYM
		LT.RT.STR.ARROW	CLRS/CLRSP	TF–CHAN–3333–SYM
		LEFT–RIGHT ARROW	CLR/CLRP	TF–CHAN–3333–SYM
		2–WAY LEFT TURN	C2W/C2WP	TF–CHAN–3333–SYM

3333 – USE EXST/PROP

American Public Works Association Washington State Chapter

City of Bellevue

CHANNELIZATION SYMBOLS

SYMBOL EXIST.	SYMBOL PROP.	DESCRIPTION	BLOCK	LAYER
		LEFT TURN ARROW	CLT/CLTP	TF–CHAN–3333–SYM
		RIGHT TURN ARROW	CRT/CRTP	TF–CHAN–3333–SYM
		LEFT–SRAIGHT ARROW	CLS/CLSP	TF–CHAN–3333–SYM
		RIGHT–STRAIGHT ARROW	CRS/CRSP	TF–CHAN–3333–SYM
		RAISED MARKERS:		
○	●	LANE MARKERS TYPE I	CLM1/CLM1P	TF–CHAN–3333–SYM
□	■	LANE MARKERS TYPE II	CLM2/CLM2P	TF–CHAN–3333–SYM
				3333 – USE EXST/PROP

GAS/POWER/TELEPHONE SYMBOLS

SYMBOL EXIST.	SYMBOL PROP.	DESCRIPTION	(ABBR)	BLOCK	LAYER
		GAS METER	(GM)	GMET/GMETP	GS–METR–3333–SYM
		GAS VALVE	(GV)	GV/GVP	GS–VALV–3333–SYM
△	▲	PAD MOUNTED TRANSFORMER	(P TRAN)	PTRAN/PTRANP	PO–STCR–3333–SYM
P	P	POWER VAULT	(POW V)	PV/PVP	PO–STCR–3333–SYM
⊠		TRANSMISSION TOWER	(TRANS TWR)	PTWR	PO–STCR–EXST–SYM
-O-	-●-	UTILITY POLE	(PP, TP)	UP/UPP	11–STCR–3333–SYM
←	←	UTILITY POLE ANCHOR		UPA/UPAP	11–STCR–3333–SYM
□	■	TELEPHONE RISER	(TEL R)	TELR/TELRP	TL–STCR–3333–SYM
T	T	TELEPHONE VAULT	(TEL V)	TV/TVP	TL–STCR–3333–SYM 11 – USE PO/TL 3333 – USE EXST/PROP

American Public Works Association Washington State Chapter

City of Bellevue

LINETYPES

LINETYPE	DESCRIPTION	COLOR	LT NAME	LAYER
	SURFACE FEATURES:			
0.2" 0.1"	BUILDING LINE (EXISTING) NO. 2.5 PEN	GREEN	EXBUILD	SF–BLDG–EXST–LIN
	BUILDING LINE (PROPOSED) NO. 2.5 PEN	GREEN	CONTINUOUS	SF–BLDG–PROP–LIN
1.5" 0.1" 0.1" 0.05"	CREEK/DITCH CENTERLINE (EXIST.) NO. 0 PEN	WHITE	DITCH	SF–DTCH–EXST–LIN
	CREEK/DITCH CENTERLINE (PROP.) NO. 2.5 PEN	GREEN	DITCH	SF–DTCH–PROP–LIN
	CURB/PAVEMENT/SIDEWALK (EX) NO. 0 PEN	WHITE	CONTINUOUS	SF–222A–EXST–LIN
	CURB/PAVEMENT/SIDEWALK (PROP) NO. 1 PEN	CYAN	CONTINUOUS	SF–222A–PROP–LIN
1.0" 0.075"	FENCE (EXISTING) NO. 000 PEN	YELLOW	FNC1	SF–FENC–EXST–LIN
	FENCE (PROPOSED) NO. 1 PEN	CYAN	FNC1	SF–FENC–PROP–LIN
1.0" 0.075"	GUARDRAIL (EXISTING) NO. 000 PEN	YELLOW	EGR1	SF–GURD–EXST–LIN
	GUARDRAIL (PROPOSED) NO. 1 PEN	CYAN	PGR1	SF–GURD–PROP–LIN
2.0" 0.1" 0.1"	LAKE/POND NO. 0 PEN	WHITE	LAKE	SF–LAKE–EXST–LIN
0.15" 0.15"	MARSH/SWAMP PERIMETER NO. 0 PEN	WHITE	MARSH	SF–SWMP–EXST–LIN
0.5" 0.1" 0.125"	RAILROAD NO. 0 PEN	WHITE	R1R1	SF–RLRD–EXST–LIN
0.075"	RETAINING WALL (EXISTING) NO. 0 PEN	WHITE	ERW1	SF–WALL–EXST–LIN
	RETAINING WALL (PROPOSED) NO. 1 PEN	CYAN	PRW1	SF–WALL–PROP–LIN
	RIVERBANK/SHORELINE NO. 1 PEN	CYAN	CONTINUOUS	SF–222B–EXST–LIN

222A – USE CURB/PVMT

222B – USE RIVR/SHOR

American Public Works Association Washington State Chapter

City of Bellevue

LINETYPES

LINETYPE	DESCRIPTION	COLOR	LT NAME	LAYER
	SURVEY:			
1.2" 0.05" 0.1"	CENTERLINE (EXISTING) NO. 000 PEN	YELLOW	EXCNTL	SV–CNTL–EXST–LIN
0.1"	CENTERLINE (PROPOSED) NO. 2.5 PEN	GREEN	PROCNTL	SV–CNTL–PROP–LIN
0.05" 0.1"	CONTOUR (DEPRESSION) NO. 000 PEN	YELLOW	DEC1	SV–CONT–DEPR–LIN
0.5" * * * 0.1"	CONTOUR (EXISTING) NO. 000 PEN	YELLOW	CON	SV–CONT–EXST–LIN
* * *	CONTOUR (INDEX) NO. 1 PEN	CYAN	CON	SV–CONT–INDX–LIN
* * *	CONTOUR (PROPOSED) NO. 1 PEN	CYAN	CONTINUOUS	SV–CONT–PROP–LIN
0.1" 0.7" 0.04"	DONATION LAND CLAIM (EXIST.) NO. 1 PEN	CYAN	DLC	SV–DLCM–EXST–LIN
	DONATION LAND CLAIM (PROP.) NO. 2.5 PEN	GREEN	DLC	SV–DLCM–PROP–LIN
	EASEMENT (PERMANENT) NO. 1 PEN	CYAN	CONTINUOUS	SV–ESMT–PERM–LIN
0.4" 0.05"	EASEMENT (TEMPORARY) NO. 1 PEN	CYAN	TEMPESMT	SV–ESMT–TEMP–LIN
0.1" 0.05"	MEANDER LINE NO. 000 PEN	YELLOW	MEANDER	SV–MEAN–EXST–LIN
2.0" 0.075" 0.075"	PROPERTY LINE (EXISTING) NO. 000 PEN	YELLOW	PROPERT	SV–PROP–EXST–LIN
	PROPERTY LINE (PROPOSED) NO. 1 PEN	CYAN	PROPERT	SV–PROP–PROP
	RANGE/TOWNSHIP LINE NO. 2.5 PEN	GREEN	CONTINUOUS	SV–222A–EXST–LIN
0.5" 0.05" 0.1"	RESERVATION/PARK/FOREST (EX) NO. 1 PEN	CYAN	PARK	SV–PARK–EXST–LIN
	RESERVATION/PARK/FOREST (PRO) NO. 2.5 PEN	GREEN	PARK	SV–PARK–PROP–LIN
0.2" 0.05"	RIGHT–OF–WAY (EXISTING) NO. 1 PEN	CYAN	EXROW	SV–ROFW–EXST–LIN
0.1"	RIGHT–OF–WAY (PROPOSED) NO. 2.5 PEN	GREEN	CONTINUOUS	SV–ROFW–PROP–LIN
0.1"	RIGHT–OF–WAY (LIMITED ACCESS) NO. 1 PEN	CYAN	ROWL1	SV–LROW–EXST–LIN
	RIGHT–OF–WAY (LIMITED ACCESS) NO. 2.5 PEN	GREEN	ROWL1	SV–LROW–PROP–LIN
0.7" 0.05"	SECTION LINE NO. 2.5 PEN	GREEN	SECT	SV–SECT–EXST–LIN
0.1" 0.1" 0.7"	QUARTER SECTION LINE NO. 1 PEN	CYAN	QTRSECT	SV–QSCT–EXST–LIN
0.3" 0.1"	SIXTEENTH SECTION LINE NO. 1 PEN	CYAN	16THSECT	SV–16ST–EXST–LIN
0.8" 0.1" 0.2"	STATE/COUNTY/CORPORATE LIMIT NO. 2.5 PEN	GREEN	STATE	SV–222B–EXST–LIN
	STATE/COUNTY/CORPORATE LIMIT NO. 2.5 PEN	GREEN	STATE (PLINE .03"WIDE)	SV–222B–PROP–LIN

222A – USE RANG/TWNS
222B – USE STAT/CNTY/CITY
*** INSERT ELEVATION AT 6" INTERVALS (TEXT 0.1" HIGH)

American Public Works Association Washington State Chapter

City of Bellevue

LINETYPES

LINETYPE	DESCRIPTION	COLOR	LT NAME	LAYER
	UTILITIES (EXISTING):			
0.25" TV 0.1"	CABLE TELEVISION (AERIAL) NO. 0 PEN	RED	ATV	TV–ALIN–EXST–LIN
TV 0.1"	CABLE TELEVISION (BURIED) NO. 0 PEN	RED	TV	TV–BLIN–EXST–LIN
FM	FORCE MAIN NO. 0 PEN	MAGENTA	FM	SS–PLIN–EXST–LIN
G	GAS NO. 0 PEN	MAGENTA	G	GS–PLIN–EXST–LIN
O	OIL NO. 0 PEN	MAGENTA	O	OL–PLIN–EXST–LIN
0.25" P 0.1"	POWER (AERIAL) NO. 0 PEN	RED	AP	PO–ALIN–EXST–LIN
P	POWER (BURIED) NO. 0 PEN	RED	P	PO–BLIN–EXST–LIN
S	SANITARY SEWER NO. 0 PEN	WHITE	S	SS–GLIN–EXST–LIN
STE	STEAM NO. 0 PEN	MAGENTA	STE	ST–PLIN–EXST–LIN
D	STORM DRAINAGE NO. 0 PEN	WHITE	D	SD–2222–EXST–LIN
0.25" T 0.1"	TELEPHONE (AERIAL) NO. 0 PEN	RED	AT	TL–ALIN–EXST–LIN
T	TELEPHONE (BURIED) NO. 0 PEN	RED	T	TL–BLIN–EXST–LIN
0.1" 0.05"	UTILITY SERVICE LINE (GENERAL) NO. 000 PEN	YELLOW	SERV	11–SERV–EXST–LIN
W	WATER NO. 0 PEN	MAGENTA	W	WA–2222–EXST–LIN
	UTILITIES (PROPOSED):			
	MAIN LINE (LIST TYPE, SIZE, ETC.) NO. 0 PEN	*	CONTINUOUS (P–LINE .04" WIDE)	11–2222–PROP–LIN
	SERVICE (LIST TYPE, SIZE, ETC.) NO. 0 PEN	*	CONTINUOUS	11–SERV–PROP–LIN

* COLOR DEPENDS ON TYPE OF UTILITY (E.G. POWER, WATER, ETC.). TEXT IN UTILITY LINETYPES SPACED AT 3" INTERVALS.

11 – INDICATE UTILITY TYPE

2222 – USE ALIN/BLIN/GLIN/PLIN
ALIN – AERIAL LINE
BLIN – BURIED CONDUIT
GLIN – GRAVITY LINE
PLIN – PRESSURE LINE

American Public Works Association Washington State Chapter

City of Bellevue

TEXT STYLES

EXAMPLE	DESCRIPTION	STYLE	FONT	HEIGHT	COLOR	LAYER
EX. CONIFER	EXISTING FEATURES	80	SIMPLEX	0.08 INCH	YELLOW	SF-INFO-EXST-TXT
SCALE:	DRAWING SCALE	SCALE	ITALIC	0.12 INCH	YELLOW	SV-NORA-EXST-TXT
PROJECT	PROJECT TITLE	200	SIMPLEX	0.20 INCH	GREEN	RE-TITL-EXST-TXT
PROPOSED	GENERAL INSTRUCTION	120	SIMPLEX	0.12 INCH	CYAN	RE-INST-PROP-TXT
SEWER	PROPOSED SANITARY SEWER INSTRUCTIONS	120	SIMPLEX	0.12 INCH	CYAN	SS-INST-PROP-TXT
WATER	PROPOSED WATER INSTRUCTIONS	120	SIMPLEX	0.12 INCH	CYAN	WA-INST-PROP-TXT
STREET	STREET NAMES	240	SIMPLEX	0.24 INCH	GREEN	RE-STRT-EXST-TXT

NOTES

1. READ APWADOC2.DOC FOR MORE INFORMATION ON SYMBOL/LINETYPE INSERTION AND USE OF APWA MENUS.
2. INSERT MON OR MON-IN-CASE SYMBOLS INTO CENTER OF MONUMENTED SECTION CORNERS.
3. USE WATER VALVE AND FITTING SYMBOLS FOR SEWER FORCEMAIN VALVES AND FITTINGS.
4. LINETYPES ARE LOADED FROM THE APWALIN2.LIN LINETYPE FILE.
5. DITCH LINETYPE FLOW DIRECTION ARROW MUST BE INSERTED AT ENDS OF DASHED LINES AS SHOWN ABOVE (BLOCK NAME IS "FL").
6. COMPOSITE LINETYPES ARE DRAWN USING LISP ROUTINES IN APWA MENUS. ALTERNATE METHOD IS TO INSERT BLOCKS ALONG CONTINUOUS LINES AS FOLLOWS:

LINETYPE	BLOCK	SPACING (INCHES)
EXISTING FENCE	FP	1.0
PROPOSED FENCE	FP	1.0
EXISTING GUARDRAIL	GR	1.0
PROPOSED GUARDRAIL	GRP	1.0
EXISTING RAILROAD	RR	0.5
EXISTING RETAINING WALL	EW	0.25
PROPOSED RETAINING WALL	PW	0.25
DEPRESSION CONTOUR	DEP	0.1
LIMITED ACCESS R.O.W.	LA	0.1

7. LINEWEIGHTS ARE BASED ON DISPOSABLE LIQUID INK PLOTTER

POINT SIZES:

COLOR	PEN SIZE	NUMBER
YELLOW	0.25	3x0
MAGENTA RED WHITE	0.35	0
CYAN	0.5	1
GREEN	0.7	2 1/2

APPENDIX S-3

SAMPLE TITLE BLOCK

SCALE

X 0 .5X X 2X

DATUM BENCHMARK

PLAN

(PLAN & PROFILE MAY BE ON SEPARATE SHEETS IF NECESSARY)

PROFILE

VICINITY MAP

STANDARD NOTES

DRAINAGE MAP #
WATER GRID #
SEWER GRID #

NO	DATE	BY	APPR	REVISIONS

ENGINEERING COMPANY NAME & ADDRESS

ENGINEER'S STAMP

Approved By

DESIGNED BY DATE
DRAWN BY DATE
CHECKED BY DATE

PROJECT NAME & ADDRESS

SHEET DESCRIPTION

SEC___ TWP___ RGE___ SHT ____ OF____

APPENDIX S-4

SEWER APPROVED MATERIALS LIST

The following manufacturers have been approved for use for sanitary sewer construction. Where specific manufacturers are listed, no other manufacturer may be used without prior approval by the Utility.

DUCTILE IRON PIPE

All manufacturers that meet the performance requirements specified under the material section of the standards.

DUCTILE IRON FITTINGS

All manufacturers that meet the performance requirements specified under the material section of the standards.

GALVANIZED IRON PIPE

All manufacturers that meet the performance requirements specified under the material section of the standards.

JOINT RESTRAINT SYSTEMS

EBAA Iron (MEGALUG Series 1100)
Griffin Pipe Products Company (Snap-Lok, Bolt-Lok)
Romac (Grip Ring), 600 Series, Roma Grip
Star National Products (Shackle Products)
US Pipe (TR FLEX)

COUPLINGS

Romac (400 and 501 Series), Dresser

STAINLESS STEEL REPAIR BANDS

Romac, Ford

CASING SPACERS

Pipeline Seal and Insulator Co.:
8" band, carbon steel with fusion-bonded coating, Model C8G-2
12" band, carbon steel with fusion-bonded coating, Model C12G-2

Cascade Waterworks Mfg. Co.:
Stainless Steel or hot-dip galvanized carbon steel Casing Spacers (catalog number depends on size)

Advance Products & Systems, Inc.:
8" band, stainless steel, Model SSI8
12" band, stainless steel, Model SSI12

8" band, carbon steel with fusion-bonded coating, Model SI8
12" band, carbon steel with fusion-bonded coating, Model SI12

CASING END SEALS

Pipeline Seal and Insulator Co.:
Standard Pull-on (Model S)
Custom Pull-on (Model G)

Cascade Waterworks Mfg. Co.:
CCES End Seal

Advance Products & Systems, Inc.
Molded End Seal, Model AM

VALVES

All manufacturers that meet the performance requirements specified under the material section of the standards.

VALVE BOXES

Olympic Foundry Inc.:	#VB045 Lid, Top and Base Section
RICH (VanRich Casting Corp.):	Top section and lid #045 with RICH Standard Base
Inland Foundry Co., Inc.:	Valve Box Paving Riser #2052-3, #2052-4, #2053-5 12" Adjusting Sleeve #044A

METER BOXES

6” Cleanout Service	Olympic Foundry SM29
8” Cleanout Service	Olympic Foundry SM30
Valve Chamber	Mid-States Plastic Model MSBCF 1730-12 (Substitution for check valve assembly)

PVC PIPE (ASTM D-3034) 4" - 15"

All manufacturers that meet the performance requirements specified under the material section of the standards.

PVC PIPE (ASTM F-679) 18" - 27"

All manufacturers that meet the performance requirements specified under the material section of the standards.

PVC PIPE (AWWA C-900) 4" - 12"

All manufacturers that meet the performance requirements specified under the material section of the standards.

ABS PIPE AND FITTINGS

All manufacturers that meet the performance requirements specified under the material section of the standards.

PRECAST MANHOLE SECTIONS

Pacific International Pipe and Engineering, Inc.
Associated Sand and Gravel Company

POLYPROPYLENE MANHOLE STEPS

Lane International Corporation, P-13938
M.A. Industries, Inc., PS-2-PF

MANHOLE FRAMES AND COVERS

Inland Foundry Co.
Olympic Foundry

CLEAN-OUT FRAMES AND COVERS

Inland Foundry Co.
Olympic Foundry

PVC BY CONCRETE MANHOLE ADAPTERS

A.C. x PVC Brant Adapter
Kor-N-Seal Company, Kor-N-Seal Connector
GPK Products, Inc., GPK PVC Manhole Adapter

AWWA C-900 FITTINGS AND MANHOLE ADAPTERS

Head Manufacturing (Idaho)
Vassallo (Florida)

OIL/WATER SEPARATORS

100 gallon - Utility Vault Co., Inc., No. 25-SA
450 gallon - Utility Vault Co., Inc., No. 660-SA
800 gallon - Utility Vault Co., Inc., No. 48-SA
1,000 gallon - Utility Vault Co., Inc., No. 48-SA

GREASE INTERCEPTORS

Utility Vault Co, Inc., See Standard Detail.

BACKWATER VALVES

APCO Rubber Flapper Swing Check, 100 Series

MECHANICAL SEWER PLUGS

SIDU Manufacturing Company, Inc.
Sewer Equipment Company of America
SRECO Flexible
Graham Hand Tite (Plastic)

PREFABRICATED PLASTIC MANHOLE CHANNELS

GU Manhole Liners Ltd.

CONTROLLED DENSITY (FLOWABLE) FILL

Stoneway, CADMAN

RECYCLED CONCRETE (FOR USE AS CRUSHED SURFACING BASE COURSE MATERIAL)

Stoneway Recycling
Renton Recycling (with certification that the material is free of contaminants)

NEOPRENE FOAM PAD (FOR CUSHION BETWEEN ADJACENT PIPES)

Dow Plastics Ethafoam^{tm} 220