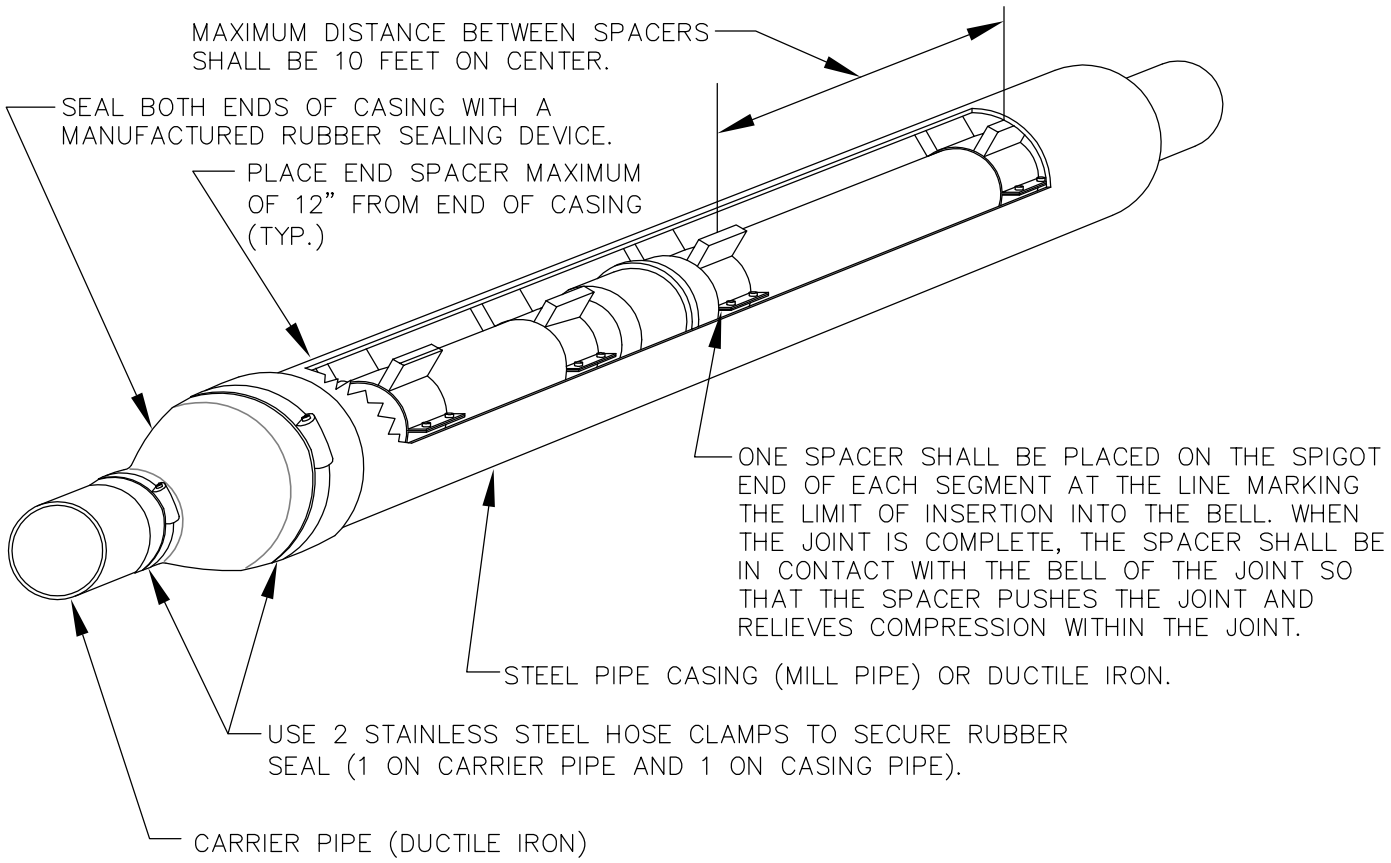

CASING SPACERS (SEE APPROVED MATERIALS LIST)

CARRIER PIPE DIAMETER	4"	6"	8"	10"	12"
CASING DIAMETER (PUSH-ON JOINT CARRIER PIPE)	10"	12"	14"	16"	20"
CASING DIAMETER (MJ/MEGALUG JOINT CARRIER PIPE)	14"	16"	18"	20"	22"*
STEEL CASING THICKNESS	0.25"	0.25"	0.25"	0.25"	0.25"
SPACER BAND WIDTH	8"	8"	8"	8"	8"

NOTES: * 24" FOR DUCTILE IRON CASING.

1. CASING SPACERS SHALL BE "CENTER POSITIONING" TYPE.
2. MINIMUM RUNNER WIDTH SHALL BE 2 INCHES.
3. RUNNER HEIGHT SHALL BE SIZED TO PROVIDE:
   A. MINIMUM 0.75" BETWEEN CARRIER PIPE BELL AND CASING PIPE WALL AT ALL TIMES.
   B. MINIMUM 1" CLEARANCE BETWEEN RUNNERS AND TOP OF CASING WALL TO PREVENT JAMMING DURING INSTALLATION.
4. STEEL CASING DIAMETERS ARE "OUTSIDE DIAMETER" FOR 16" AND LARGER.
5. SPACER BAND WIDTH SHALL BE 12" FOR CARRIER PIPES THAT ARE 36" DIAMETER OR GREATER.
6. FOR STEEL CASING, PROVIDE SHOP-APPLIED ANTI-CORROSIVE COATING ON CASING EXTERIOR CONFORMING TO AWWA C210. MINIMUM COATING THICKNESS 16 MILS DFT (DO NOT EXCEED MANUFACTURER'S MAXIMUM THICKNESS). PRODUCT SHALL BE EQUAL TO TNEMEC HI-BUILD TNEME-TAR SERIES 46H-413.

JANUARY 2014 NO SCALE

City of Bellevue

WATER UTILITY

TITLE

CASING INSTALLATION

NO. W-7