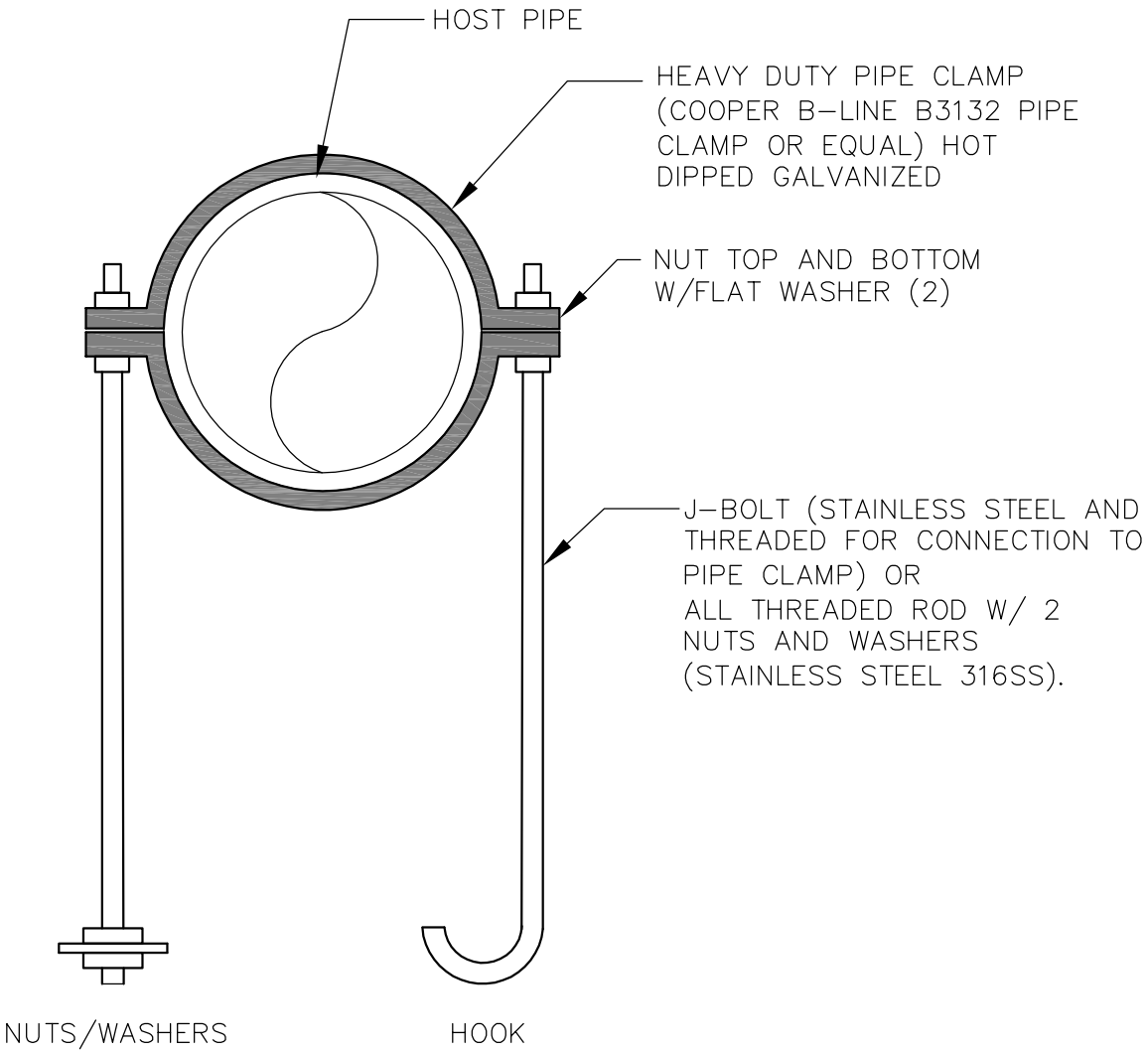

NOTES:

1. J-BOLT DIAMETER:
   - PIPE DIAMETER LESS THAN OR EQUAL TO 6": 7/8", 6" & 8" PIPE: 1", 10" = 1-1/4".
   - PIPE DIAMETER GREATER THAN 12": 1-1/2".
2. TIGHTEN TOP NUTS TO TENSION BOLTS.
3. TIGHTEN LOWER NUTS TO COMPRESS CLAMP SNUG.

City of Bellevue

WATER UTILITY

TITLE

PIPE CLAMP AND ANCHOR RODS FOR CONCRETE BLOCKING

JANUARY 2014

NO SCALE

NO. W-5