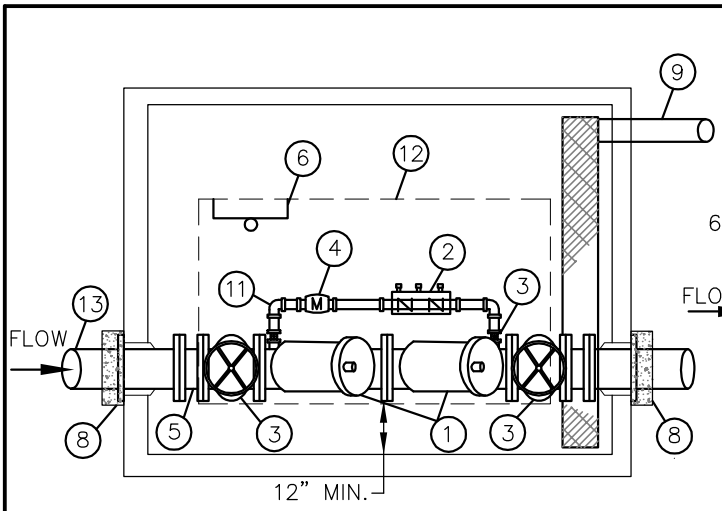

PLAN

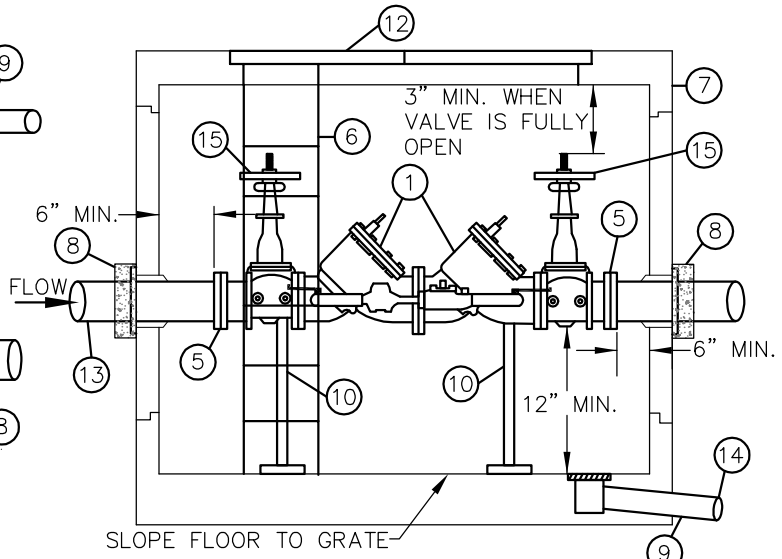

ELEVATION

1. STATE APPROVED DOUBLE CHECK VALVE ASSEMBLY, COMPLETE WITH (2) RESILIENT SEATED O.S.&Y. VALVES AND (4) RESILIENT SEATED TEST COCKS, AND BRASS OR COPPER DETECTOR BY-PASS. FACE TEST COCKS TOWARD CENTER OF VAULT AND ACCESSIBLE.
2. STATE APPROVED 3/4" DOUBLE CHECK VALVE ASSEMBLY, COMPLETE WITH (2) RESILIENT SEATED BALL VALVES AND (4) RESILIENT SEATED TEST COCKS. FACE TEST COCKS TOWARD CENTER OF VAULT.
3. EACH VALVE SHALL BE MARKED WITH MODEL NUMBER WITH DESIGNATION OF RESILIENT SEAT: SUCH AS "RS" OR "R", WHICH MUST BE CAST, MOLDED, OR AFFIXED ONTO THE BODY OR BONNET OF THE VALVE. ALL FERROUS BODIED VALVES SHALL BE COATED WITH A MINIMUM OF 4MLS. OF EPOXY OR EQUIVALENT POLYMERIZED COATING.
4. 3/4" METER (CUBIC FEET READING)
5. MEGAFLANGE
6. ONE GALVANIZED STEEL LADDER TO BE SECURED TO VAULT WITH LADDER-UP (BILCO MODEL LU-2). LADDER TO BE ATTACHED TO VAULT PER STANDARD DETAIL W-19.
7. CONCRETE VAULT WITH 2 LOCKING ALUMINUM LW HATCH DOORS (PART NO. HHD-42"x72"), RATED FOR H-30 LOADING, OFFSET WITH SLIP RESISTANT TREATMENT PER SECTION W4-17 OF THE ENGINEERING STANDARDS. COVER TO READ "WATER". VAULT SHALL BE EQUAL TO UTILITY VAULT CO. MODEL LISTED IN THE TABLE BELOW.
8. WATER TIGHT GROUT. RESTRAIN INLET/OUTLET PIPE WITH MEGALUG MID-SPAN RESTRAINT AND THRUST BLOCK ADJACENT TO VAULT SEE STANDARD DETAIL W-56.
9. DRAIN, SLOPE TO DAYLIGHT OR STORM DRAINAGE SYSTEM, MINIMUM DIAMETER 6".
10. TWO ADJUSTABLE PIPE STANCHIONS, BOLTED TO FLOOR.
11. ALL PLUMBING FOR BY-PASS TO BE COPPER AND BRASS.
12. ACCESS TO BE CENTERED OVER ASSEMBLY.
13. CL. 52 D.I., PExFL WITH RETAINER GLANDS.
14. INSTALL WIRE MESH RODENT SCREEN OVER DRAIN OUTLET.
15. 2 VALVE SUPERVISORY SWITCHES, SPDT, PER FIRE DEPARTMENT REQUIREMENTS (1 SWITCH PER VALVE).

NOTES:

1. TESTING IS REQUIRED BY A WASHINGTON STATE DEPARTMENT OF HEALTH CERTIFIED BACKFLOW ASSEMBLY TESTER UPON INSTALLATION AND ANNUALLY THEREAFTER. ASSEMBLY TO BE MAINTAINED BY OWNER.
2. TEE & GATE VALVES REQUIRED ON MAIN.
3. WHEN DOUBLE CHECK VALVE ASSEMBLY IS USED IN SAME LINE WITH DOMESTIC BUILDING METER, METERED DETECTOR BYPASS SHALL BE OMITTED.
4. ALL CLEARANCES SHOWN ARE MINIMUM.
5. VAULTS SHALL NOT BE INSTALLED IN AREAS WITH VEHICULAR TRAFFIC.
6. IN CENTRAL BUSINESS DISTRICT, 3" THROUGH 6" ASSEMBLIES SHALL CONNECT TO WATER MAIN WITH 8" PIPE.
7. FDC TO BE LOCATED DOWNSTREAM OF DCVA. FDC LINE & CHECK VALVE MAY BE ROUTED INSIDE THE DCVA VAULT PROVIDED ALL PROVISIONS IN STANDARD DETAIL W-48 ARE MET.
8. MINIMUM 2' OF LEVEL, UNOBSTRUCTED AREA AROUND HATCHES.
9. SECURE A VALVE MARKER, PER DETAIL W-55, TO EACH GATE VALVE HANDLE.
10. LONGER VALVE ASSEMBLIES MAY REQUIRE A LARGER VAULT TO MEET THE REQUIRED CLEARANCES. SUBMIT FOR APPROVAL.

SIZE	MIN. VAULT SIZE (INSIDE) W	L	H	UTIL. VAULT CO. MODEL	UTIL. VAULT CO. COVER *
3"	4'-2"	4'-8"	3'-3"	675-WA	675-2-332P
4"	4'-6"	5'-3"	3'-8"	675-WA	675-2-332P
6"	4'-8"	6'-6"	4'-5"	675-WA	675-2-332P
8"	5'-0"	7'-8"	5'-3"	687-LA	687-TL-2-332
10"	5'-2"	8'-8"	6'-1"	5106-LA	5106-TL3-332

* COVER MODIFIED PER NOTE 7.

City of Bellevue

WATER UTILITY

TITLE

3" TO 10" DOUBLE CHECK DETECTOR ASSEMBLY FOR FIRE SPRINKLER SYSTEMS (OUTSIDE INSTALLATION)

NO. W-45

JANUARY 2014

NO SCALE