VERTICAL BLOCKING FOR 11 1/4°–22 1/2°–30° BENDS					
PIPE SIZE	V B	CU FT	A	D	L
4"	11 1/4°	8	2.0'	3/4"	1.5'
	22 1/2°	11	2.2'		2.0'
	30°	17	2.6'		
6"	11 1/4°	11	2.2'	3/4"	2.0'
	22 1/2°	25	2.9'		
	30°	41	3.5'		
8"	11 1/4°	16	2.5'	3/4"	2.0'
	22 1/2°	47	3.6'		
	30°	70	4.1'	3/4"	2.5'
12"	11 1/4°	32	3.2'	3/4"	2.0'
	22 1/2°	88	4.5'	7/8"	3.0'
	30°	132	5.1'		
16"	11 1/4°	70	4.1'	7/8"	3.0'
	22 1/2°	184	5.7'	1 1/8"	4.0'
	30°	275	6.5'	1 1/4"	
20"	11 1/4°	91	4.5'	7/8"	3.0'
	22 1/2°	225	6.1'	1 1/4"	4.0'
	30°	330	6.9'	1 3/8"	4.5'
24"	11 1/4°	128	5.0'	1"	3.5'
	22 1/2°	320	6.8'	1 3/8"	4.5'
	30°	480	7.9'	1 5/8"	5.5'
VERTICAL BLOCKING FOR 45° BENDS					
4"	45°	30	3.1'	3/4"	2.0'
6"		68	4.1'		
8"		123	5.0'		
12"		232	6.1'	3/4"	2.5'
16"		478	7.8'	1 1/8"	4.0'
20"		560	8.2'	1 1/4"	
24"		820	9.4'	1 3/8"	4.5'

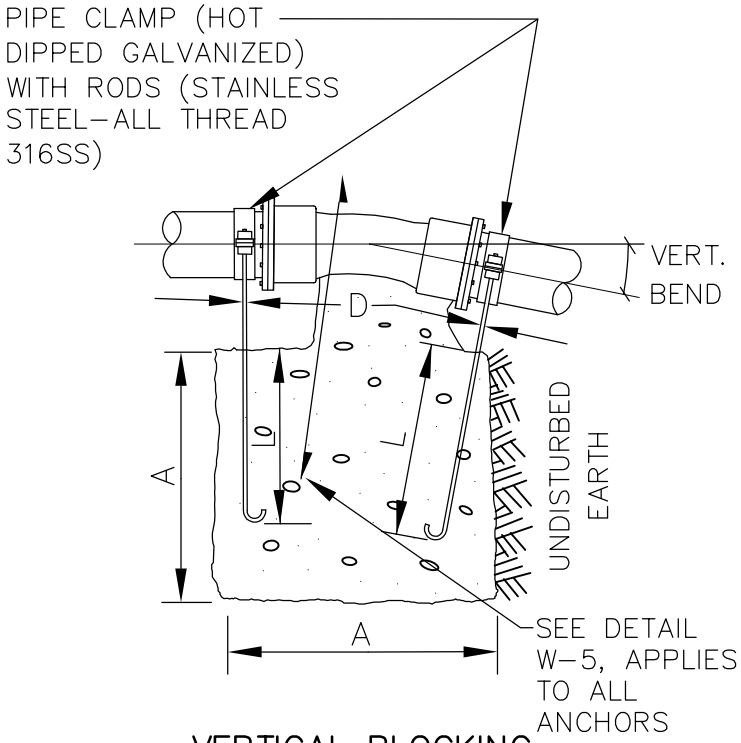

VERTICAL BLOCKING
FOR 11 1/4°, 22 1/2°, & 30° BENDS

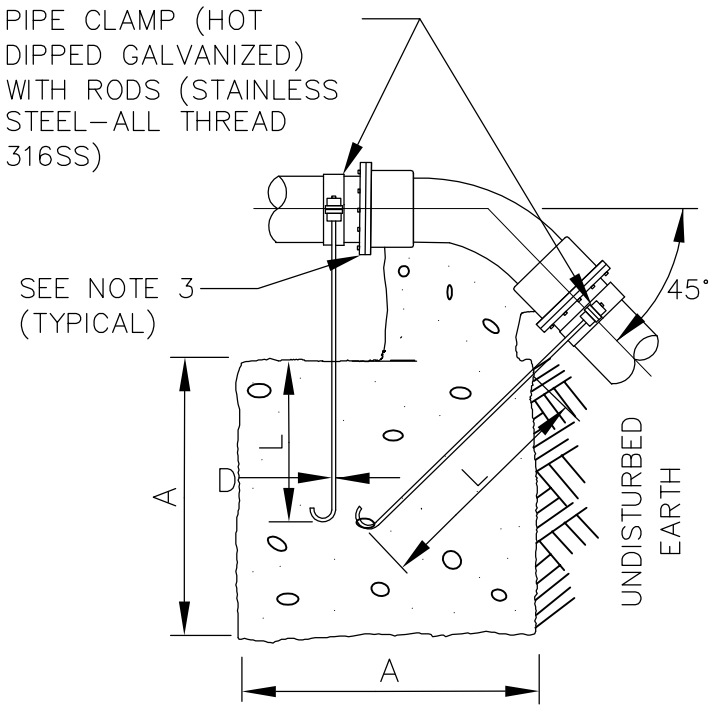

VERTICAL BLOCKING
FOR 45° BENDS

NOTES:

1. CONCRETE BLOCKING BASED ON 200 PSI PRESSURE AND 2500 PSI CONCRETE.
2. LEAVE BLOCK OPEN OR SHEETED 24 HOURS MINIMUM.
3. MEGA–LUG FITTINGS.

JANUARY 2014 NO SCALE

City of Bellevue

VERTICAL BLOCKING
FOR CONNECTING TO
EXISTING MAIN

NO. W–3