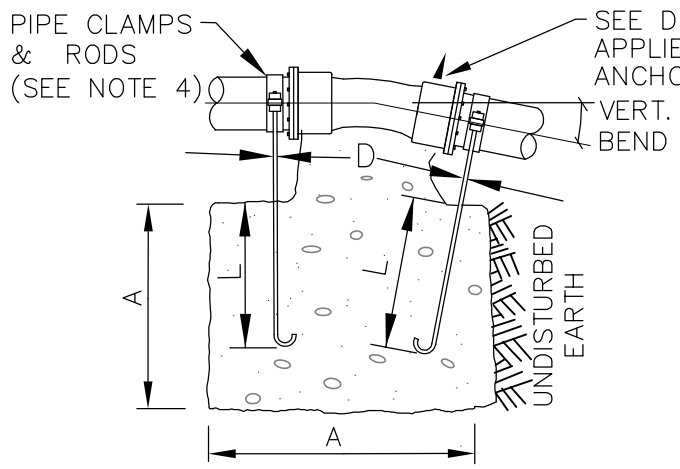

VERTICAL BLOCKING
11 1/4° & 22 1/2° BENDS

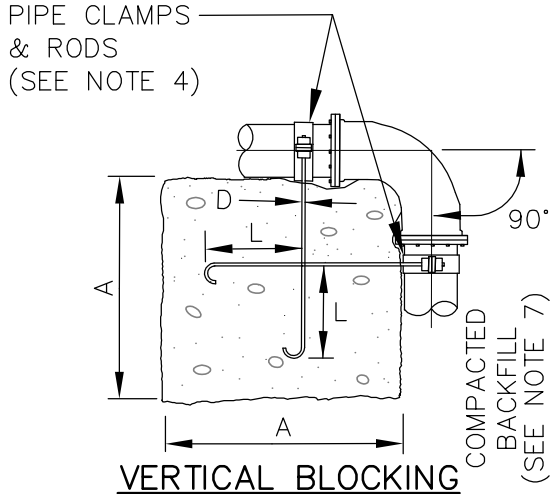

VERTICAL BLOCKING
FOR 90° BENDS
(SEE NOTE 6)

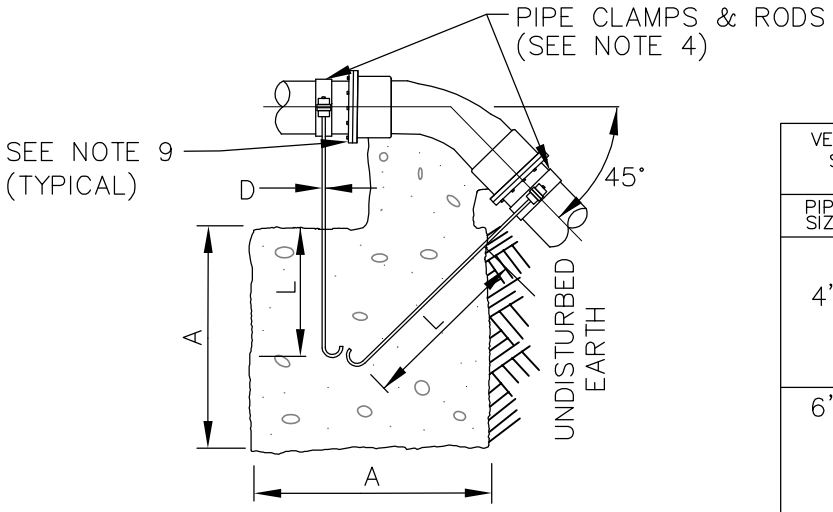

VERTICAL BLOCKING
FOR 45° BENDS

NOTES:

1. NO CHANGE IN PIPE DIRECTION OR DIAMETER SHALL OCCUR WITHIN 36 FEET OF THE VERTICAL BEND. BENDS, TEES, REDUCERS, ETC. BEYOND THE 36 FOOT LIMIT SHALL BE RESTRAINED BY STANDARD CONCRETE BLOCKING PER STD. DTL. W-1 & W-3.
2. CONCRETE BLOCKING SIZES BASED ON:
   - 36 FEET OF PIPE RESTRAINED EACH SIDE OF BEND.
   - THRUST BLOCK AREAS BASED ON SAFE BEARING LOAD OF 1,000 PSF.
   - 2,500 PSI CONCRETE.
   - MINIMUM 3 FEET OF COVER.
   - PIPE THRUST BASED ON 200 PSI PRESSURE.
   - PIPE ENCASED IN POLYETHYLENE.
   - VERTICAL BLOCK SIZE BASED ON CONCRETE WEIGHT OF 150 POUNDS PER CUBIC FOOT.
   - TRENCH CONDITIONS BASED ON TYPE 2, FLAT BOTTOM TRENCH WITH LIGHTLY CONSOLIDATED BACKFILL, PER ANSI/AWWA C150/A21.50.
   - FACTOR OF SAFETY IS 1.5.
   - SOIL FRICTIONAL RESISTANCE BASED ON COHESIVE GRANULAR SOIL TYPE (GC+SC). SAND, GRAVEL, CLAY MIXTURE.
3. BLOCKING DESIGN MUST BE ADJUSTED FOR OTHER SIZE PIPE, PRESSURES AND SOIL CONDITIONS.
4. PIPE CLAMP (HOT DIPPED GALVANIZED). RODS (STAINLESS STEEL ALL-THREAD 316SS)
5. LINE SHALL NOT BE PRESSURIZED UNTIL ALL TRENCHING WITHIN 100 FEET OF VERTICAL BEND IS BACKFILLED AND COMPACTED TO MINIMUM COVER OF 3 FEET OVER PIPE.
6. 90° VERTICAL BENDS SHALL ONLY BE INSTALLED WHERE GIVEN PRIOR APPROVAL BY THE UTILITY.
7. BACKFILL TRENCH BEYOND 90° VERTICAL BLOCK WITH CRUSHED SURFACING TOP COURSE MATERIAL COMPACTED TO 95% MAXIMUM DENSITY. CRUSHED BACKFILL SHALL EXTEND 20 FEET BEYOND BLOCK OR TO FIRM BEARING TRENCH WALL, WHICHEVER IS LESS.
8. LEAVE BLOCK OPEN OR SHEETED 24 HOURS MINIMUM.
9. MEGA-LUG FITTINGS.

VERTICAL BLOCKING SIZE W/RESTRAINED JOINTS
SOIL TYPE = COHESIVE GRANULAR [GC+SC]
SAND, GRAVEL, CLAY MIXTURE

PIPE SIZE	V B	CU FT	A	D	L
4"	11 1/4°	*			
	22 1/2°	*			
	45°	*			
	90°	16	2.5'	3/4"	2.0'
6"	11 1/4°	*			
	22 1/2°	*			
	45°	13	2.3'	3/4"	2.0'
	90°	43	3.5'	3/4"	2.0'
8"	11 1/4°	*			
	22 1/2°	*			
	45°	33	3.2'	3/4"	2.0'
	90°	86	4.4'	3/4"	2.0'
10"	11 1/4°	*			
	22 1/2°	13	2.3'	3/4"	2.0'
	45°	64	4.0'	3/4"	2.0'
	90°	141	5.2'	1"	3.5'
12"	11 1/4°	*			
	22 1/2°	20	2.7'	3/4"	2.0'
	45°	111	4.8'	3/4"	2.0'
	90°	206	5.9'	1 1/8"	4.0'

* BLOCKING NOT REQUIRED IF 36 FEET OF PIPE IS RESTRAINED ON EACH SIDE OF BEND.

City of Bellevue

VERTICAL BLOCKING
WITH RESTRAINED JOINTS
FOR NEW LINES

JANUARY 2014 NO SCALE

NO. W-2