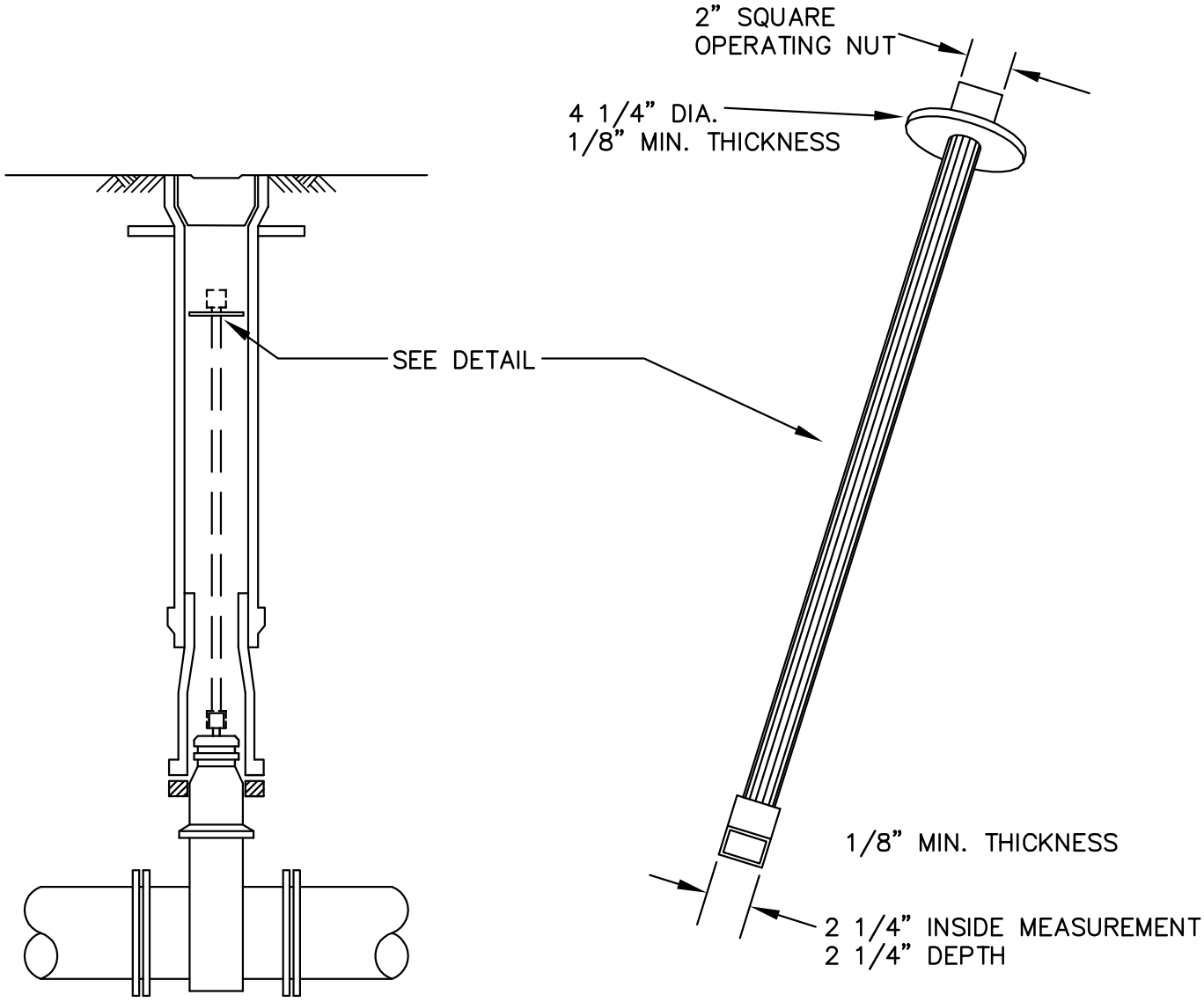

VALVE OPERATING NUT EXTENSION

EXTENSIONS ARE REQUIRED WHEN THE VALVE NUT IS MORE THAN THREE (3) FEET BELOW FINISHED GRADE. EXTENSIONS ARE TO BE A MINIMUM OF ONE (1) FOOT LONG. ONLY ONE EXTENSION TO BE USED PER VALVE.

NOTES:

1. ALL EXTENSIONS ARE TO BE MADE OF STEEL, SIZED AS NOTED, AND HOT DIPPED GALVANIZED.
2. INSTALL EXTENSIONS PERPENDICULAR TO THE WATER LINE VERTICAL ALIGNMENT.

City of Bellevue

WATER UTILITY

TITLE

VALVE OPERATING EXTENSION

JANUARY 2014

NO SCALE

NO. W-12