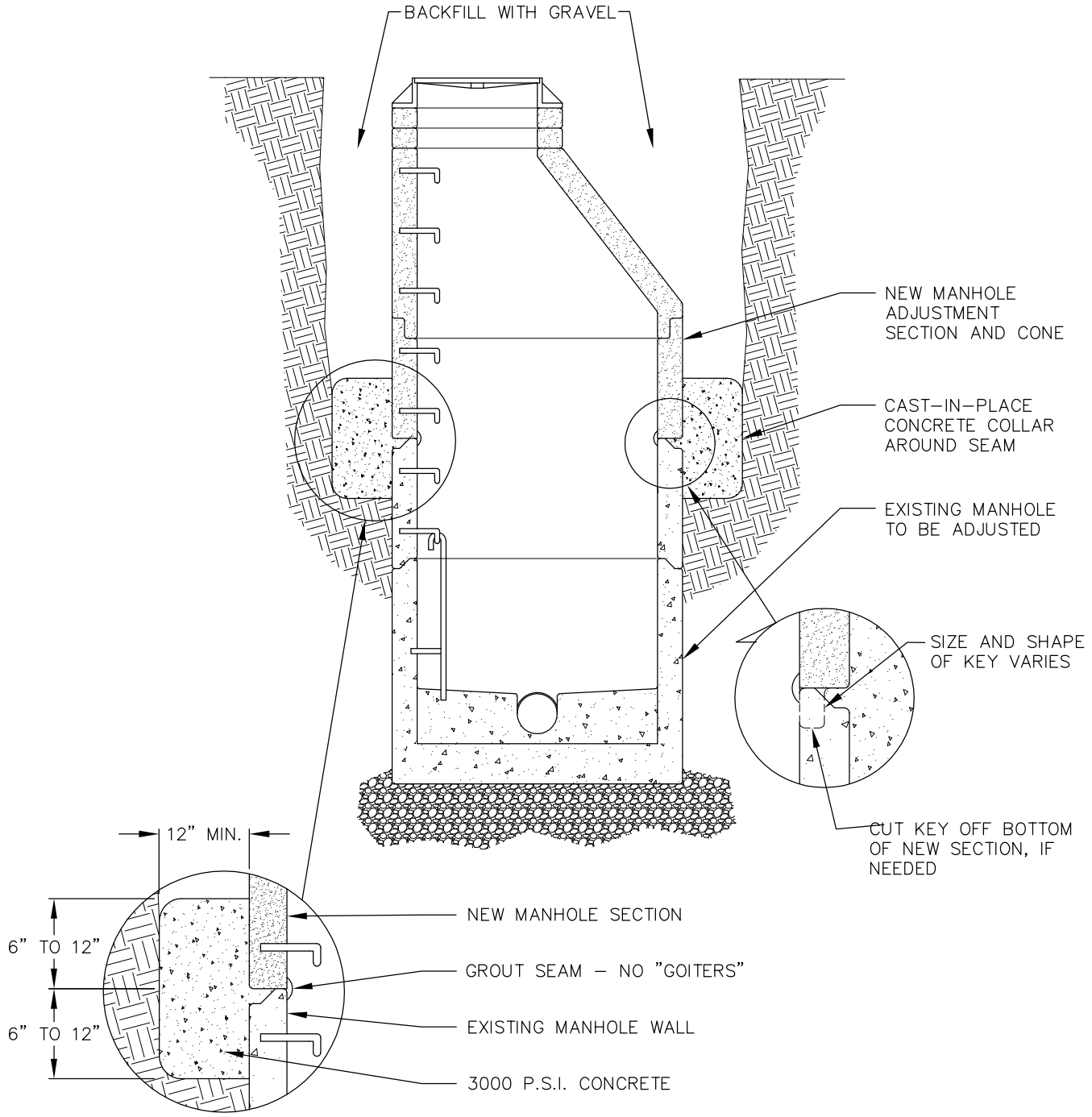

NOTES:

1. MANHOLE SHALL CONFORM TO THE GENERAL NOTES AND ALL APPLICABLE REQUIREMENTS OF STANDARD DETAIL S-1.
2. WHERE DEPTH OF MANHOLE NECK EXCEEDS 24", ADJUST MANHOLE TO GRADE BY INSTALLING NEW MANHOLE BARREL SECTION AND CONE ON EXISTING MANHOLE BARREL.
3. WHERE KEY SECTIONS OF NEW AND EXISTING MANHOLES ARE NOT COMPATIBLE, CUT KEY OFF BOTTOM OF NEW SECTION AND PROVIDE A CAST-IN-PLACE CONCRETE COLLAR AROUND MANHOLE PERIMETER. CAST COLLAR WITH 3000 P.S.I CONCRETE.
4. UPWARD ADJUSTMENT OF EXISTING MANHOLES MUST BE DONE WITH ALL NEW PARTS, AS NECESSARY, TO ENSURE ONLY ONE INCOMPATIBLE SEAM.
5. GROUT ALL JOINTS INSIDE, OUTSIDE AND IN BETWEEN TO ACHIEVE WATERTIGHT CONSTRUCTION. FINISH SMOOTH THE INSIDE OF STRUCTURE. USE NON-SHRINK GROUT ONLY.

City of Bellevue

SEWER UTILITIES

TITLE

MANHOLE SECTION ADJUSTMENT

JANUARY 2014

NO SCALE

NO. S-9