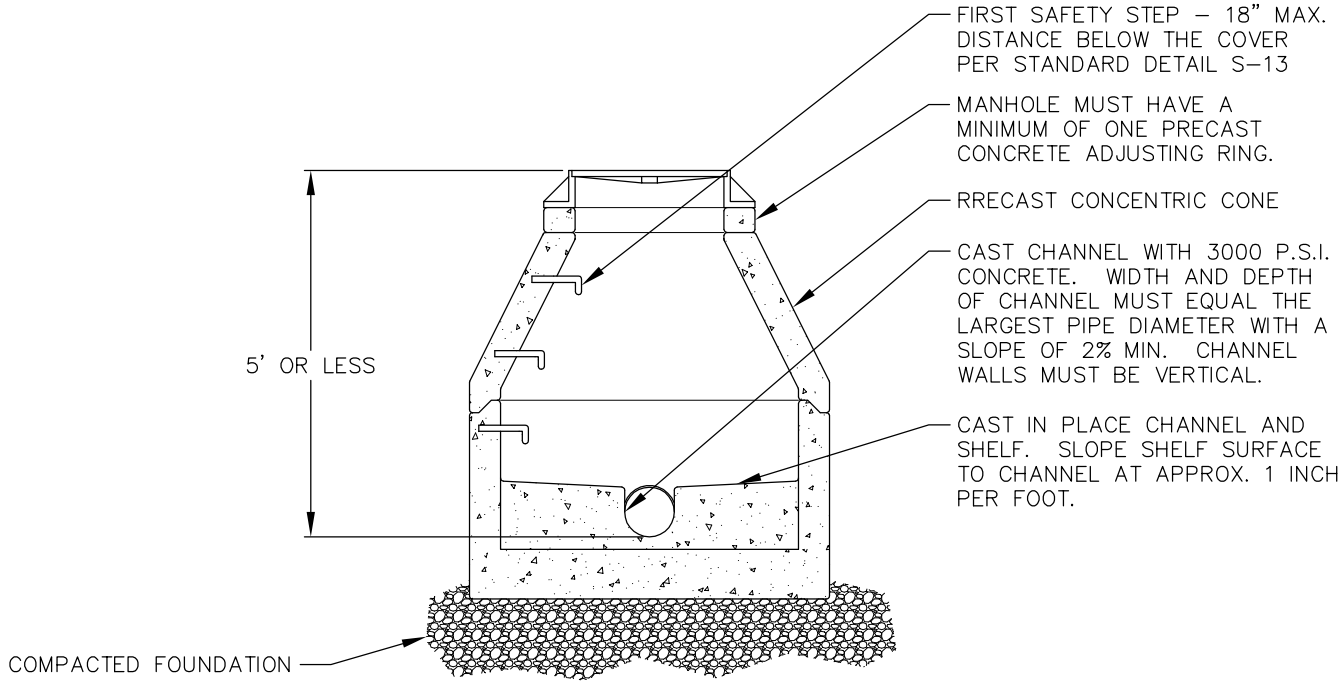

NOTES:

1. MANHOLE SHALL CONFORM TO THE GENERAL NOTES AND ALL APPLICABLE REQUIREMENTS OF STANDARD DETAIL S–1.
2. MANHOLES UNDER 5' IN DEPTH FROM RIM TO INVERT SHALL BE CONSTRUCTED WITH A CONCENTRIC CONE. MANHOLES OVER 5' SHALL BE CONSTRUCTED WITH AN ECCENTRIC CONE AND CONFORM TO STANDARD DETAIL S–1.
3. PIPE CONNECTION TO MANHOLE: KOR–N–SEAL OR EQUAL FOR CORE–DRILLED SECTIONS, OR SAND COLLAR FOR SECTIONS WITH KNOCKOUTS.
4. GROUT ALL JOINTS INSIDE, OUTSIDE AND IN BETWEEN TO ACHIEVE WATERTIGHT CONSTRUCTION. FINISH SMOOTH THE INSIDE OF STRUCTURE. USE NON–SHRINK GROUT ONLY.

City of Bellevue

SEWER UTILITIES

TITLE

MANHOLE UNDER 5 FEET DEEP

JANUARY 2014

NO SCALE

NO. S–6