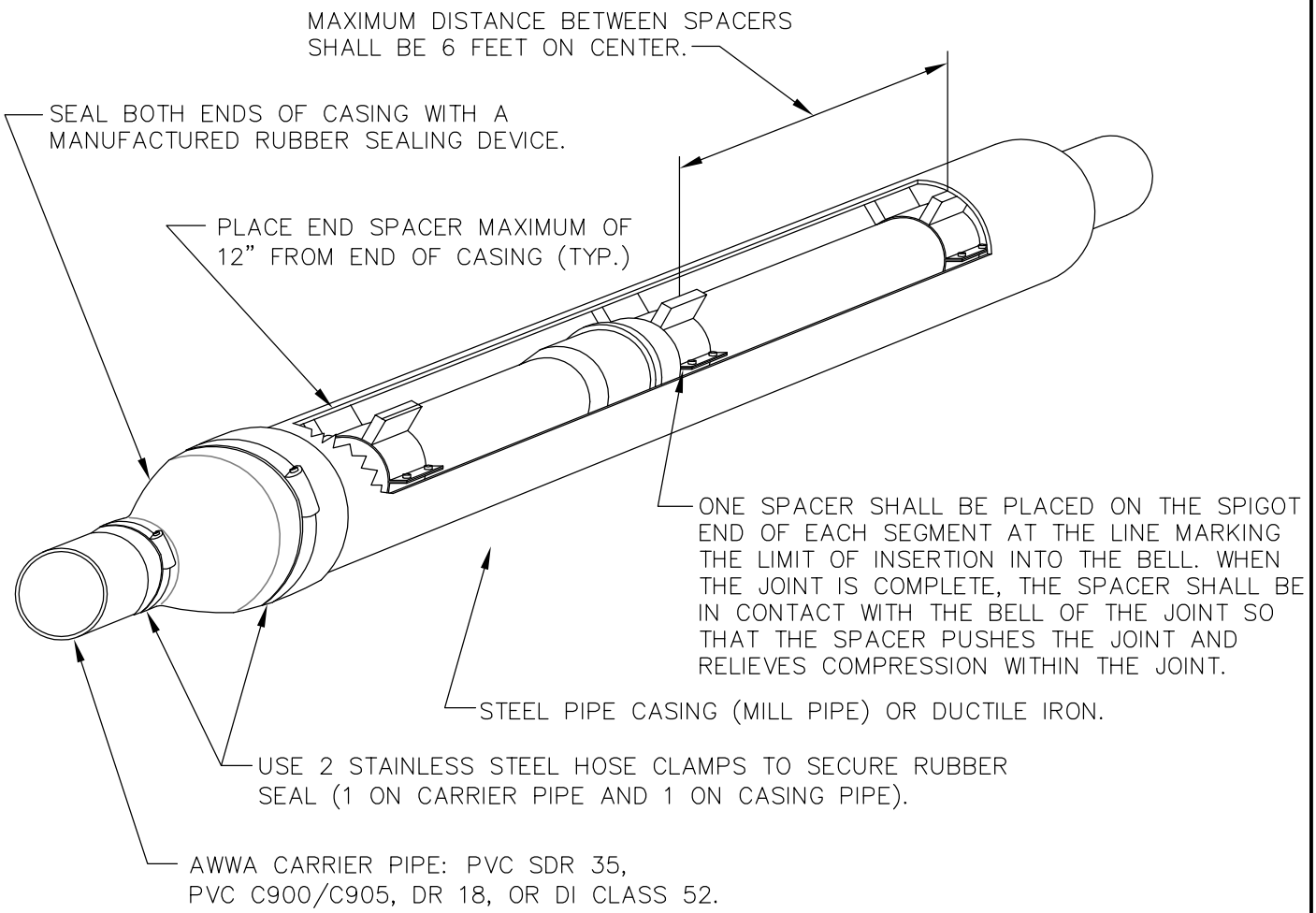

CARRIER PIPE DIAMETER	4"	6"	8"	10"	12"
CASING DIAMETER	10"	12"	14"	16"	20"
STEEL CASING THICKNESS	0.25"	0.25"	0.25"	0.25"	0.25"
SPACER BAND WIDTH	8"	8"	8"	8"	8"

NOTES:

1. CASING SPACERS SHALL BE "CENTER POSITIONING" TYPE.
2. FOR CASING SPACERS SPECS SEE S4-24.
3. MINIMUM RUNNER WIDTH SHALL BE 2 INCHES.
4. RUNNER HEIGHT SHALL BE SIZED TO PROVIDE:
   A. MINIMUM 0.75" BETWEEN CARRIER PIPE BELL AND CASING PIPE WALL AT ALL TIMES.
   B. MINIMUM 1" CLEARANCE BETWEEN RUNNERS AND TOP OF CASING WALL TO PREVENT JAMMING DURING INSTALLATION.
5. STEEL CASING DIAMETERS ARE "OUTSIDE DIAMETER" FOR 16" AND LARGER. .
6. SPACER BAND WIDTH SHALL BE 12" FOR CARRIER PIPES THAT ARE 36" DIAMETER OR GREATER.
7. FOR STEEL CASING, PROVIDE SHOP-APPLIED ANTI-CORROSIVE COATING ON CASING EXTERIOR CONFORMING TO AWWA 210. MINIMUM COATING 16 MILS DFT (DO NOT EXCEED MANUFACTURER'S MAXIMUM THICKNESS). PRODUCT SHALL BE EQUAL TO TNEMEC HI-BUILD TNEME-TAR SERIES 46H-413.

City of Bellevue

SEWER UTILITIES

TITLE

CASING INSTALLATION

JANUARY 2014

NO SCALE

NO. S-33