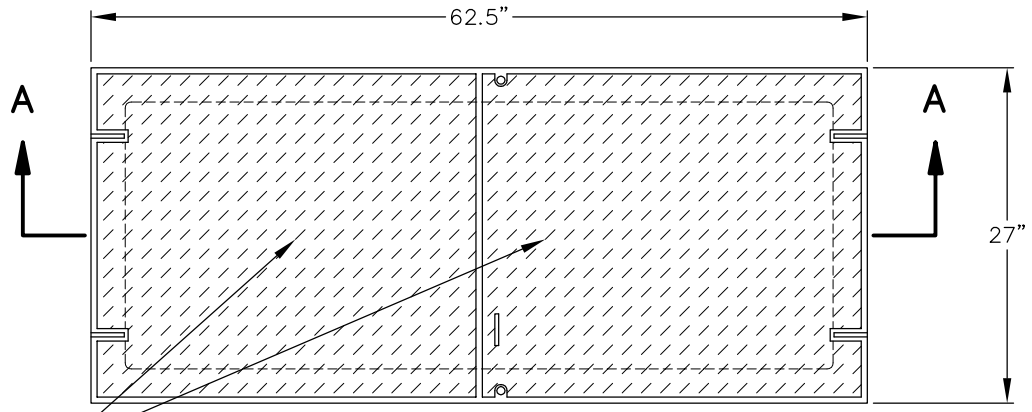

GALVANIZED DIAMOND PLATE COVERS WITH BOLT-DOWN LOCKS

COVER PLAN

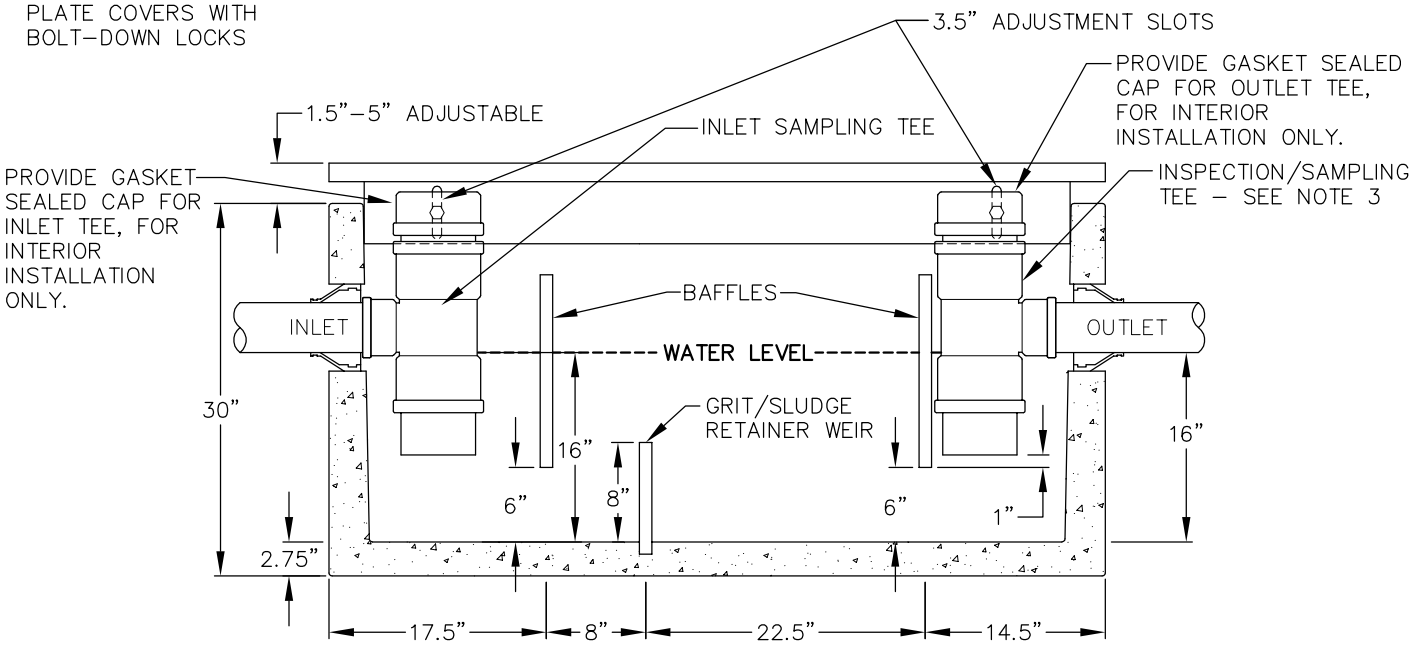

SECTION AA

NOTES:

1. USE UTILITY VAULT COMPANY INC. MODEL #25-SA OR EQUAL. PRECAST VAULT SHALL HAVE KNOCKOUTS AT ALL PIPE OPENINGS. IF KNOCKOUTS ARE NOT PRESENT, THEN PIPE OPENINGS SHALL BE CORE-DRILLED. PIPE OPENINGS SHALL BE 2" LARGER THAN THE PIPE DIAMETER.
2. LOCATE VAULT WITHIN 20' OF DRIVE FOR ACCESS BY MAINTENANCE VEHICLES.
3. P.V.C INSPECTION AND SAMPLING TEE SHALL BE THE SAME SIZE AS THE OUTLET PIPE FOR 6" OUTLET OR GREATER. USE 6" BY OUTLET-SIZE TEE WHERE OUTLET PIPE SIZE IS LESS THAN 6". INSTALL GASKETED CAP ON TOP OF THE SAMPLING TEE, FOR INTERIOR INSTALLATION ONLY.
4. FILL WITH CLEAN WATER PRIOR TO START-UP OF THE SYSTEM.
5. GRAY AND BLACK WATER SHALL BE CARRIED BY SEPARATE SIDE SEWER.
6. PIPE CONNECTION TO VAULT: KOR-N-SEAL OR EQUAL FOR CORE-DRILLED OPENINGS, OR SAND COLLAR FOR KNOCKOUT OPENING. SEAL ALL PIPE CONNECTIONS WITH NONSHRINK GROUT.
7. INTERIOR OIL/WATER SEPARATORS SHALL HAVE VENTING PER 2009 UNIFORM PLUMBING CODE REQUIREMENTS.
8. PRIOR TO STARTUP, OIL/WATER SEPARATOR SHALL PASS 1% PER DAY LEAK TEST WHERE ONLY A MAXIMUM OF 1% OF DEAD STORAGE REDUCTION IS ALLOWED WITHIN A 24 HOUR PERIOD PER THE 2009 UNIFORM PLUMBING CODE 712.2
9. ACCESS LID SHALL HAVE SLIP RESISTANT TREATMENT PER SECTION S4-19 OF THE ENGINEERING STANDARDS.

City of Bellevue

SEWER UTILITIES

TITLE

100 GALLON BAFFLE TYPE OIL/WATER SEPARATOR

JANUARY 2014

NO SCALE

NO. S-28