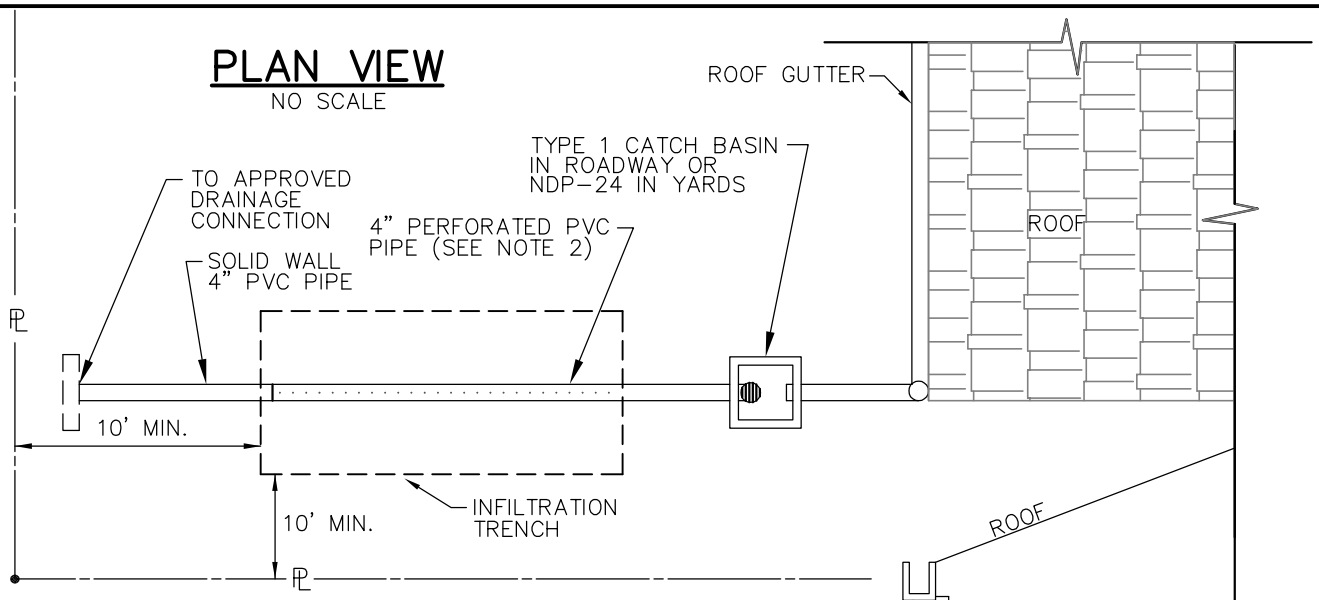

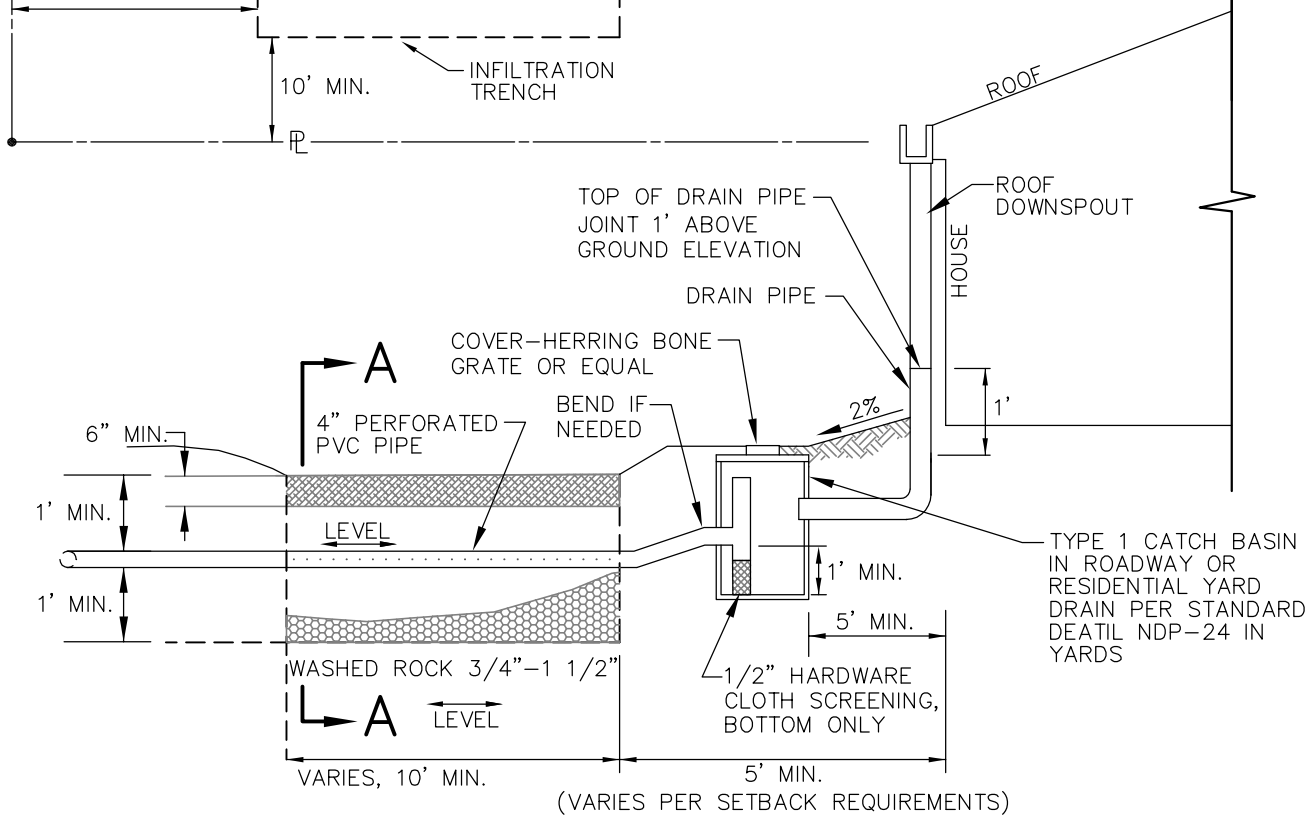

PROFILE VIEW
NO SCALE

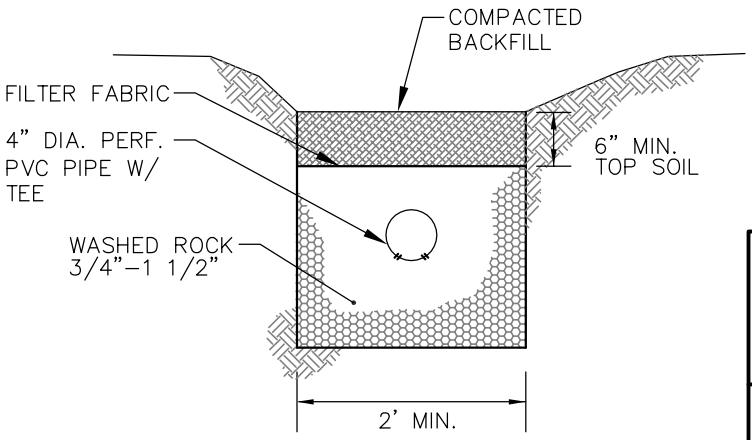

SECTION A-A
NO SCALE

NOTES:

1. TRENCH SHALL NOT BE LOCATED WITHIN 100' OF A WELL OR 30' FROM ANY PART OF A SEPTIC SYSTEM.
2. CENTER PERF. PIPE HORIZONTALLY IN TRENCH.
3. NOT TO BE USED IN CRITICAL AREA BUFFERS OR STEEP SLOPES > 25%.

City of Bellevue

STORM AND SURFACE WATER UTILITY

TITLE

RESIDENTIAL ROOF DOWNSPOUT PERFORATED PIPE CONNECTION

NO. NDP-25

JANUARY 2014