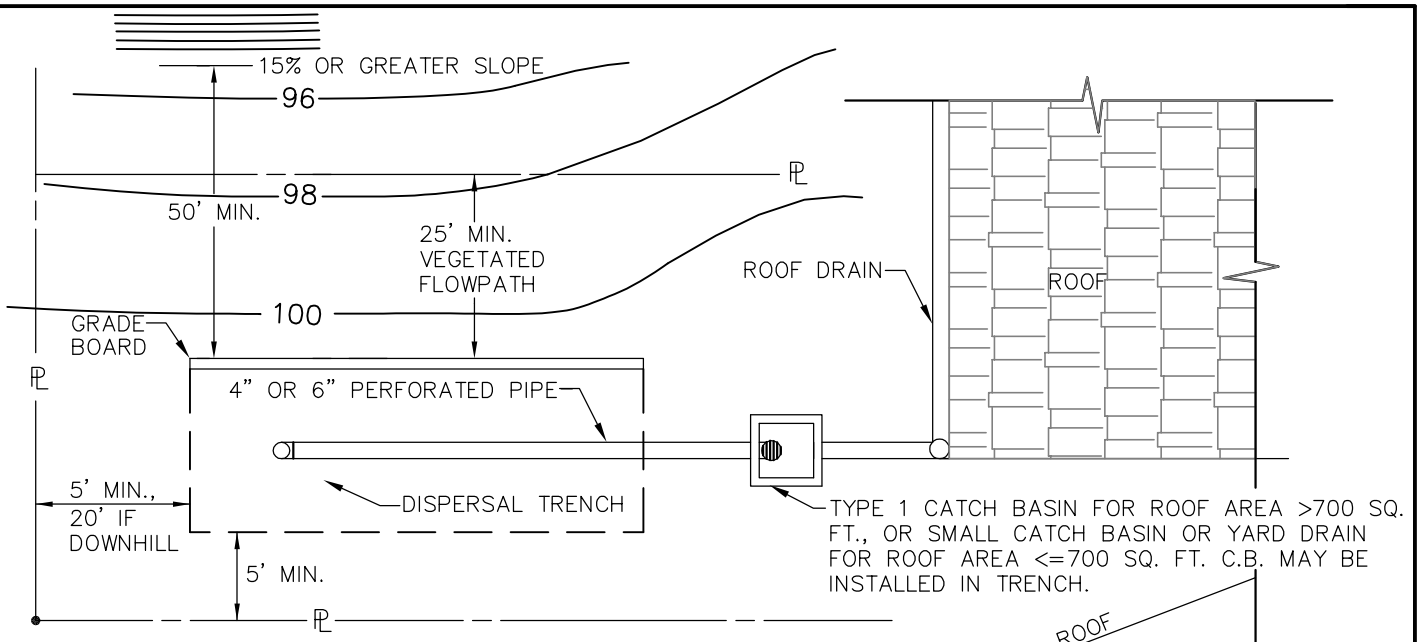

PLAN VIEW

NO SCALE

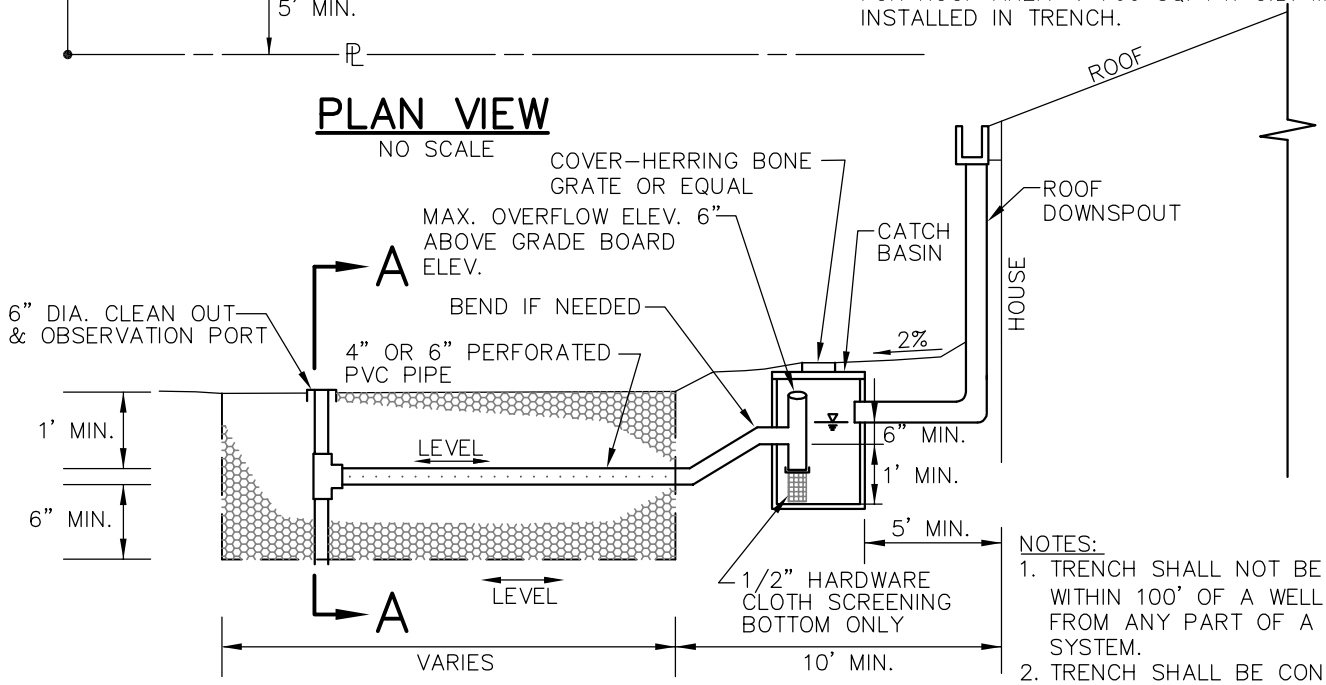

PROFILE VIEW

NO SCALE

NOTES:

1. TRENCH SHALL NOT BE LOCATED WITHIN 100' OF A WELL OR 30' FROM ANY PART OF A SEPTIC SYSTEM.
2. TRENCH SHALL BE CONSTRUCTED SO AS TO PREVENT POINT DISCHARGE AND/OR EROSION.
3. IF NO GRAVITY ACCESS TO DOWNSTREAM CONVEYANCE FACILITY AND FLOW PATH REQUIREMENT CAN NOT BE MET, MUST BE PUMPED TO APPROVED DISCHARGE.
4. GRADE BOARD AND SUPPORT POST UNTREATED, CEDAR OR RECYCLED PLASTIC. SPACE SUPPORT POSTS EVERY 10' MIN. TO KEEP GRADE BOARD LEVEL.
5. LEAVE ROCK PERMANENTLY EXPOSED. DO NOT FILL.

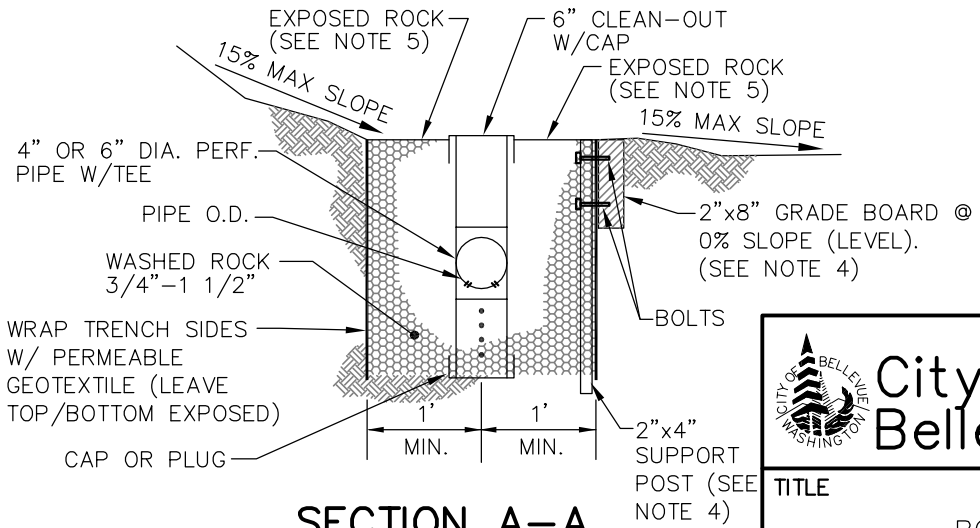

SECTION A-A

NO SCALE

City of Bellevue

STORM AND SURFACE WATER UTILITY

TITLE

ROOF DOWNSPOUT DISPERSION TRENCH

NO. NDP-22

JANUARY 2014