PLAN

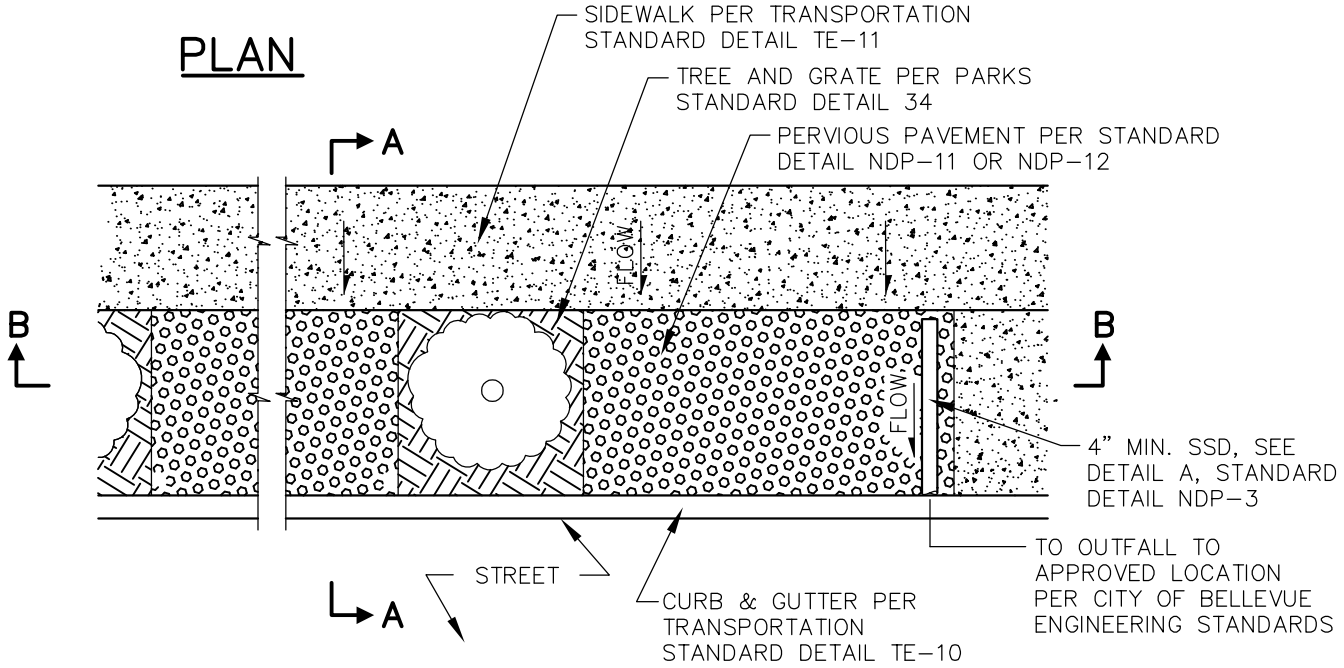

SECTION A-A

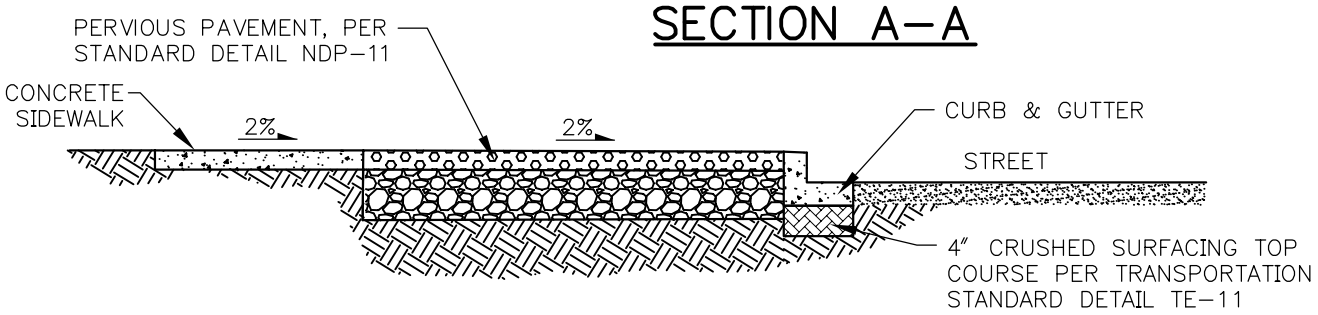

SECTION B-B

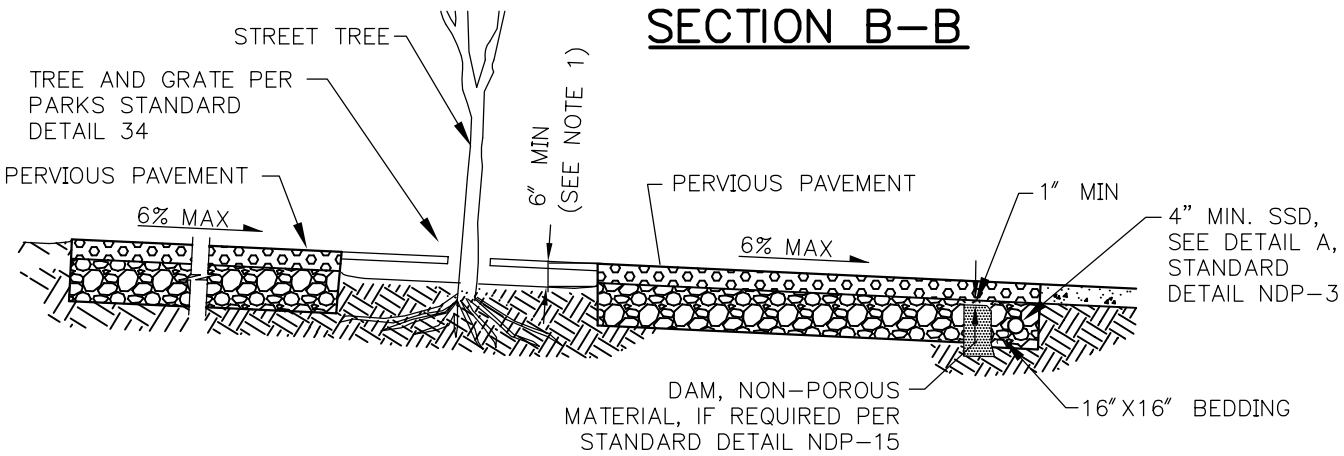

NOTE:

1. 6" MIN. DEPTH IN THE TREE PIT APPLIES TO PERVIOUS CEMENT CONCRETE SIDEWALK ONLY. IF OTHER PERVIOUS PAVER MATERIAL USED, NO MIN. DISTANCE REQUIRED.

City of Bellevue

STORM AND SURFACE WATER UTILITIES

TITLE

PERVIOUS PAVEMENT SIDEWALK IN PLANTING STRIP

NO. NDP-13

JANUARY 2014

NO SCALE