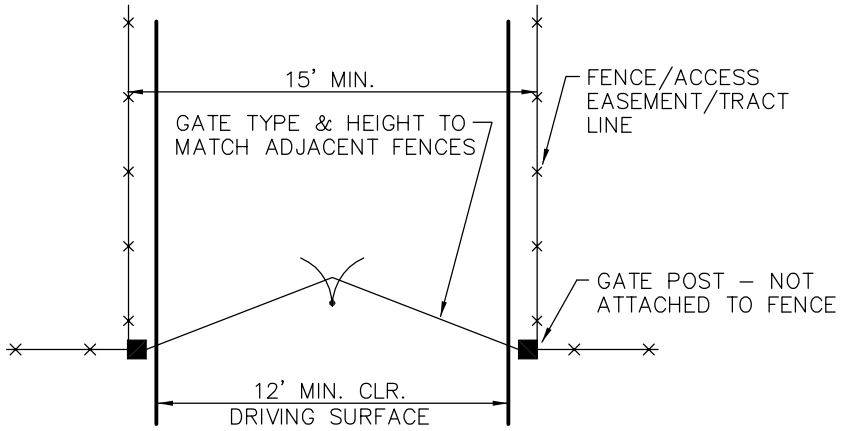

GATE PLACEMENT

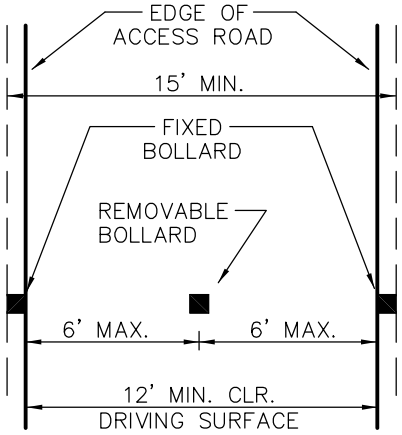

BOLLARD PLACEMENT

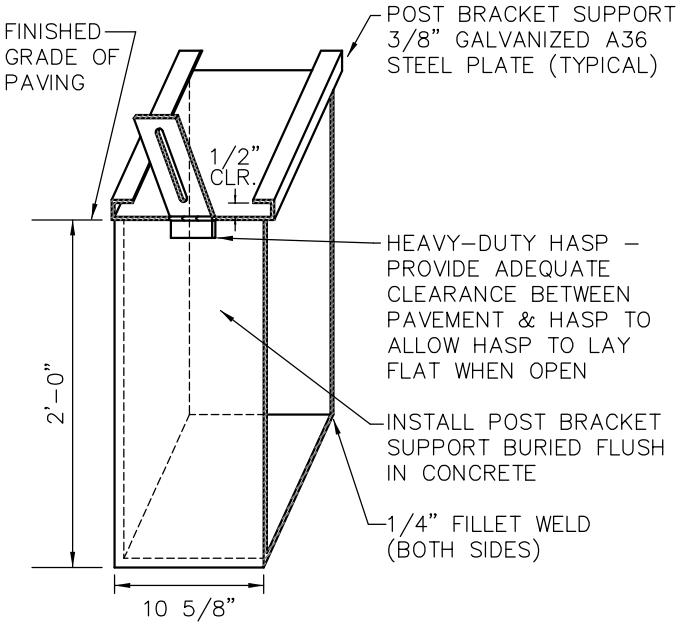

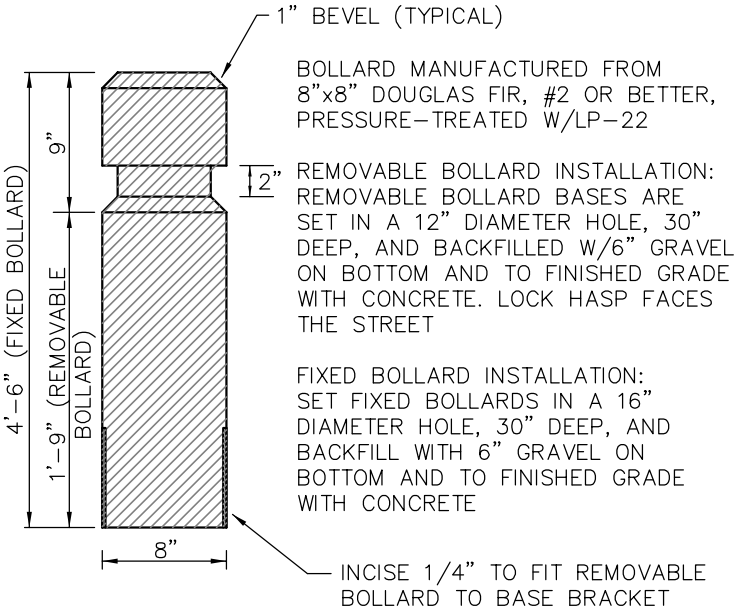

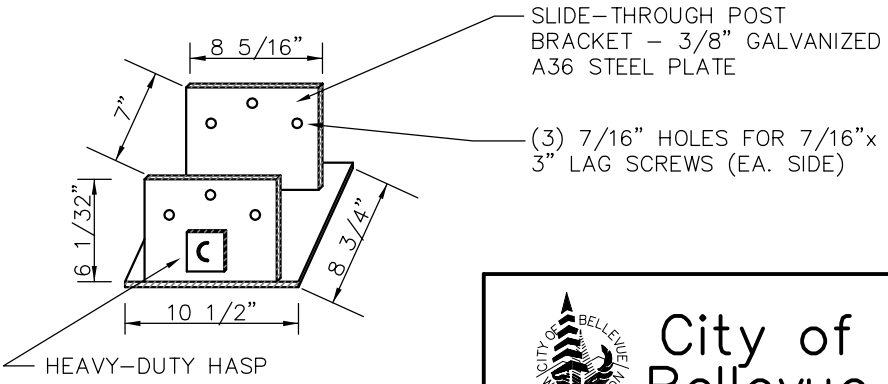

City of Bellevue

STORM AND SURFACE WATER UTILITY

TITLE

GATE/BOLLARD PLACEMENT

JANUARY 2014

NO SCALE

NO. D-45