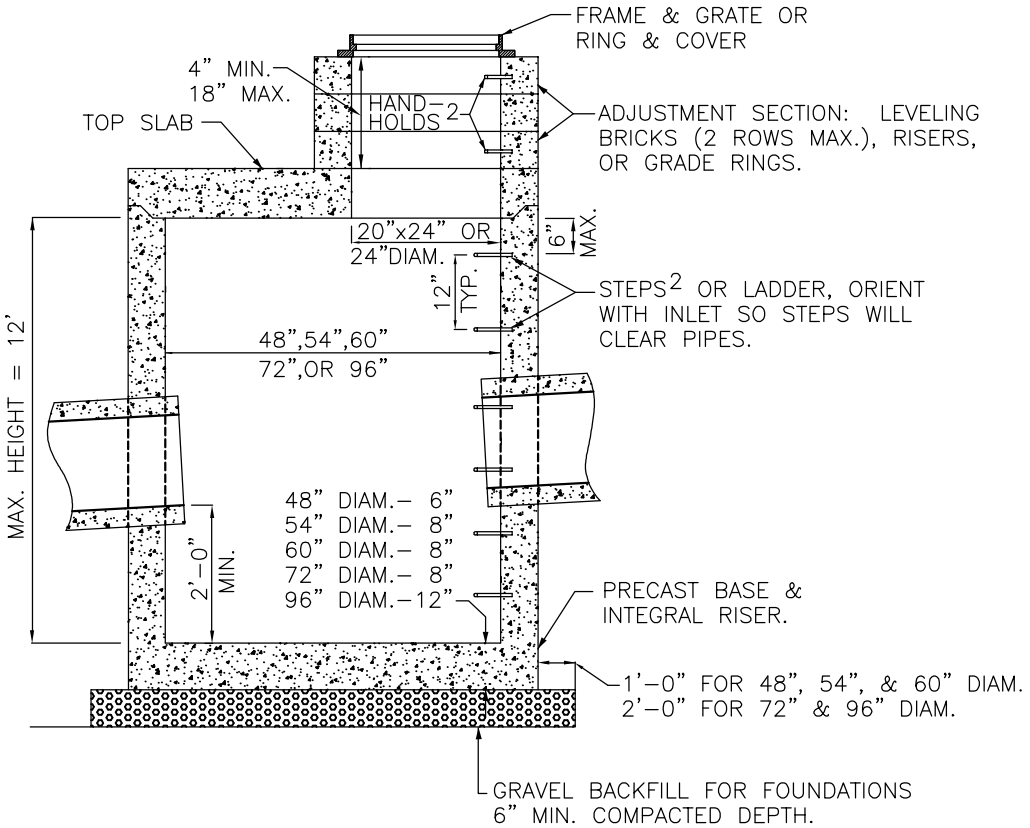

NOTES:

1. CATCH BASINS SHALL BE CONSTRUCTED IN ACCORDANCE WITH ASTM C478 (AASHTO M199) AND ASTM C890 UNLESS OTHERWISE SHOWN ON PLANS OR NOTED IN THE WSDOT STANDARD SPECIFICATIONS.

2. HANDHOLDS IN ADJUSTMENT SECTION SHALL HAVE 3" MIN. CLEARANCE. STEPS IN CATCH BASIN SHALL HAVE 6" MIN. CLEARANCE. SEE STD. DTL. NO D-5, CATCH BASIN DETAILS. HANDHOLDS SHALL BE PLACED IN ALTERNATING GRADE RINGS OR LEVELING BRICK COURSE WITH A MIN. OF ONE HANDHOLD BETWEEN THE LAST STEP AND TOP OF THE FINISHED GRADE.

3. APPLY NON-SHRINK GROUT TO INSIDE AND OUTSIDE OF ALL JOINTS, RINGS, RISERS AND FRAMES. ALL PRECAST CONCRETE SHALL BE CLASS 4000.

4. PRECAST BASES SHALL BE FURNISHED WITH CUTOUTS OR KNOCKOUTS. KNOCKOUTS SHALL HAVE WALL THICKNESS OF 2" MIN. UNUSED KNOCKOUTS NEED NOT BE GROUTED IF WALL IS LEFT INTACT. PIPES SHALL BE INSTALLED ONLY IN FACTORY KNOCKOUTS UNLESS OTHERWISE APPROVED BY THE ENGINEER.

5. KNOCKOUT OR CUTOUT HOLE SIZE SHALL EQUAL PIPE OUTER DIAM. PLUS CATCH BASIN WALL THICKNESS. MAX. HOLE SIZE SHALL BE 36" FOR 48" CATCH BASIN, 42" FOR 54" C.B., 48" FOR 60" C.B., 60" FOR 72" C.B., 84" FOR 96" C.B. MIN. DISTANCE BETWEEN HOLES SHALL BE 8" FOR 48", 54", AND 60" C.B.; 12" FOR 72" AND 96" C.B.

6. CATCH BASIN FRAMES AND GRATES OR COVERS SHALL BE IN ACCORDANCE WITH SEC. 7.05 OF THE STANDARD SPECIFICATIONS. MATING SURFACES SHALL BE FINISHED TO ASSURE NON-ROCKING FIT WITH ANY COVER POSITION.

7. FOR HEIGHTS OF 12' OR LESS, MINIMUM SOIL BEARING VALUE SHALL EAUAL 3,300 POUNDS PER SQUARE FOOT. FOR HEIGHTS OVER 12", MIN. SOIL BEARING VALUE SHALL EQUAL 3,800 POUNDS PER SQUARE FOOT.

8. FOR DETAILS SHOWING LADDER, STEPS, HANDRAILS AND TOP SLABS, SEE STD. DTL. NO. D-5.

9. SEE THE STANDARD SPECIFICATIONS SEC. 7-05.3 FO JOINT REQUIREMENTS.

JANUARY 2014 NO SCALE

City of Bellevue

STORM AND SURFACE WATER UTILITY

TITLE

CATCH BASIN TYPE 2
48", 54", 60", 72", & 96"

NO. D-4