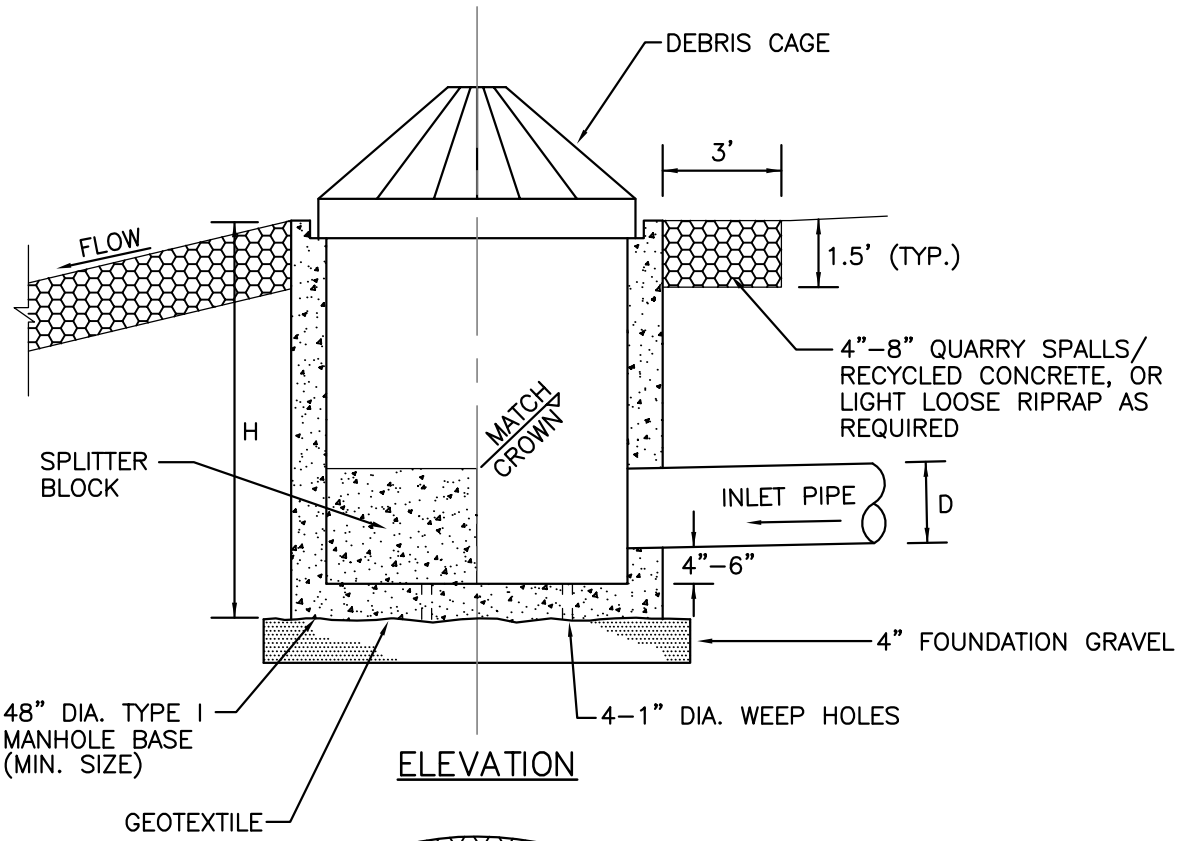


ELEVATION

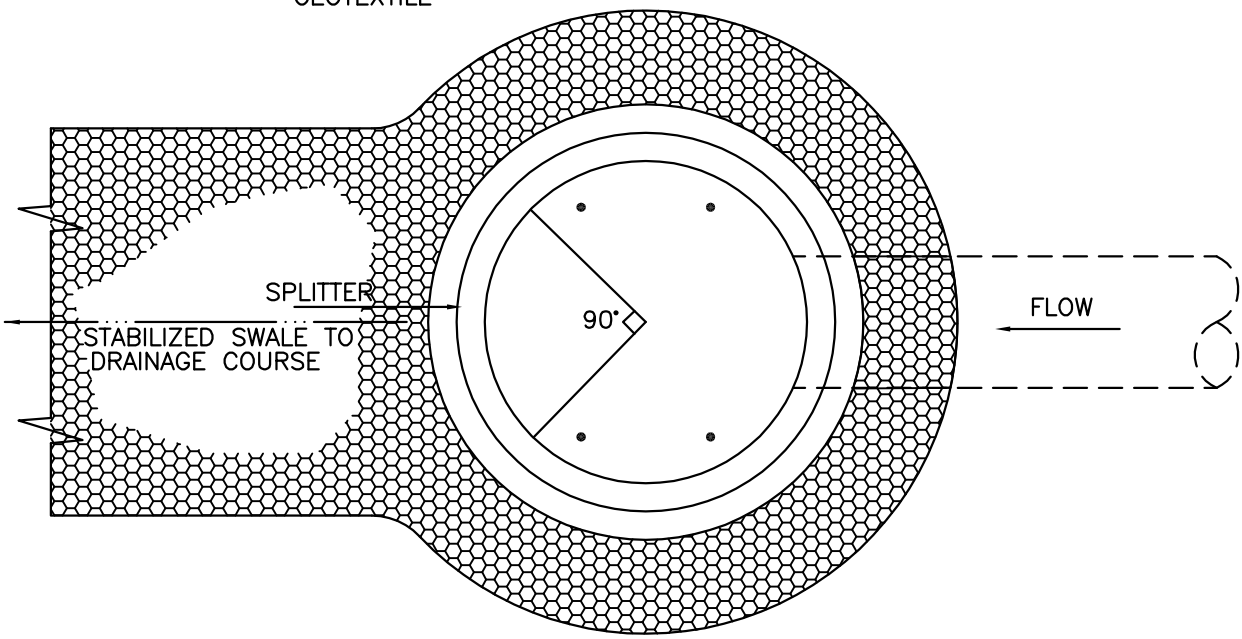


PLAN

| INLET PIPE SIZE "D" | BASE HEIGHT "H" |
|---|---|
| 8" | 2' |
| 12" | 3' |
| 18" | 3' |
| 24" | 4' |

City of Bellevue

STORM AND SURFACE WATER UTILITY

TITLE

ENERGY DISSIPATOR

JANUARY 2014

NO SCALE

NO. D–38