1 FRAME–CAST IRON
2 COVER–CAST IRON
3 ARCH–CAST IRON
4 RAILS–304 STN. STL. (CAST IRON, THRU 14")
5 YOKE–CAST IRON
6 THRUST NUT–BRONZE
7 THREADED STEM–BRONZE
8 COLLAR–CAST IRON
9 STEM EXT BRKT–
10 STEEL EXT STEM MATL. AS REQ'D.
11 2" SQUARE OPERATING NUT
12 BRONZE SEAT

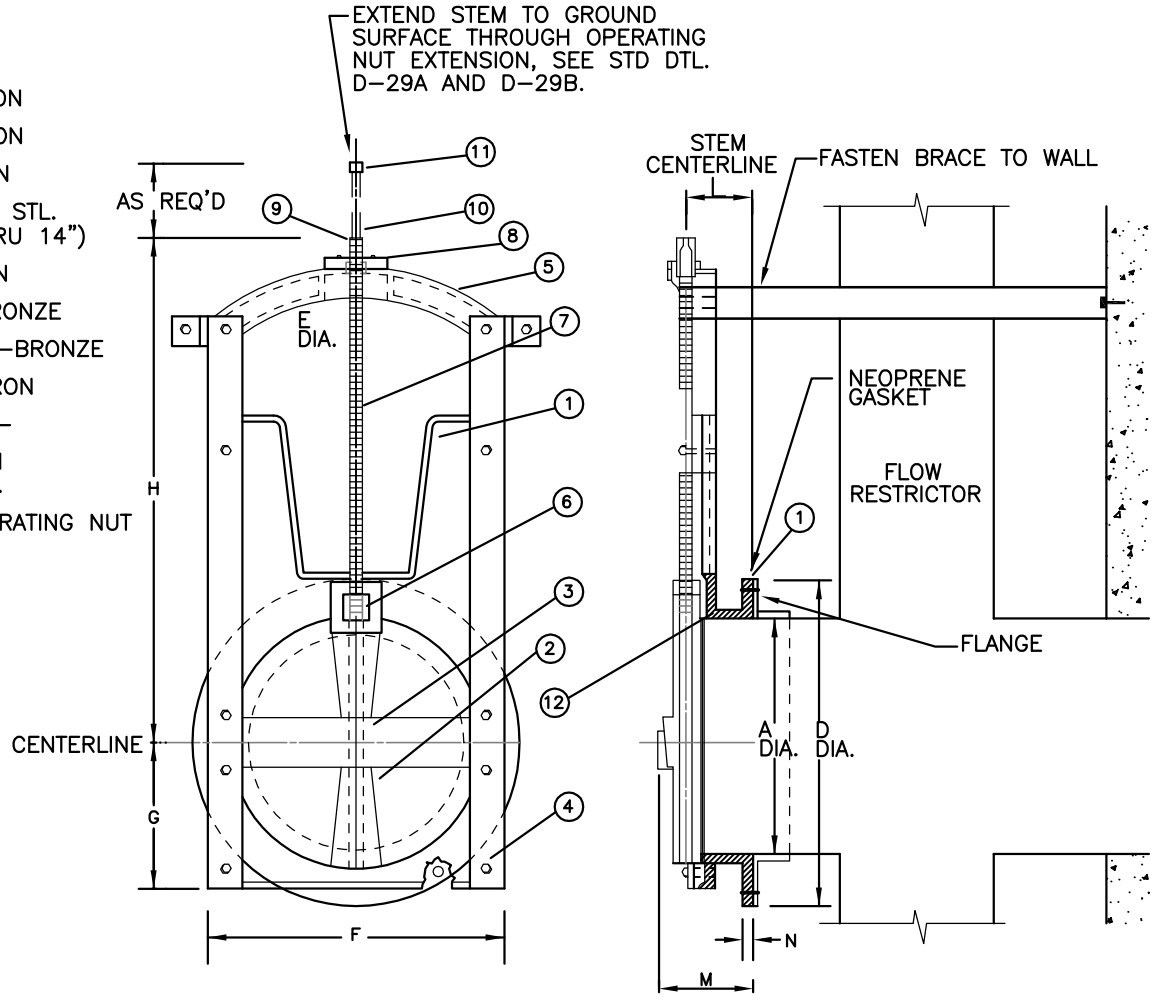

	A	BC	D	E	F	G	H	K	L	M	N	P	R	S
DIMENSIONS (IN INCHES)	8	11 3/4	13 1/2	7/8	11 1/8	5 1/2	17 5/8	10	4 1/2	7	3/4	7/8	3/4	8
	12	17	19	7/8	15 5/8	8	24 1/4	12	4 1/2	7 1/2	1	1	7/8	12

NOTES:

1. FOR OUTLET PIPE DIAMETERS OF 12 INCHES OR LESS, USE 8 INCH SHEAR GATE, GREATER THAN 12 INCHES, USE 12 INCH SHEAR GATE.
2. AWWA C509 RESILIENT SEATED GATE VALVE MAY BE SUBSTITUTED FOR GATE PER ENGINEER'S APPROVAL.

City of Bellevue

STORM AND SURFACE WATER UTILITY

TITLE

SCREW–TYPE SHEAR GATE

JANUARY 2014

NO SCALE

NO. D–28