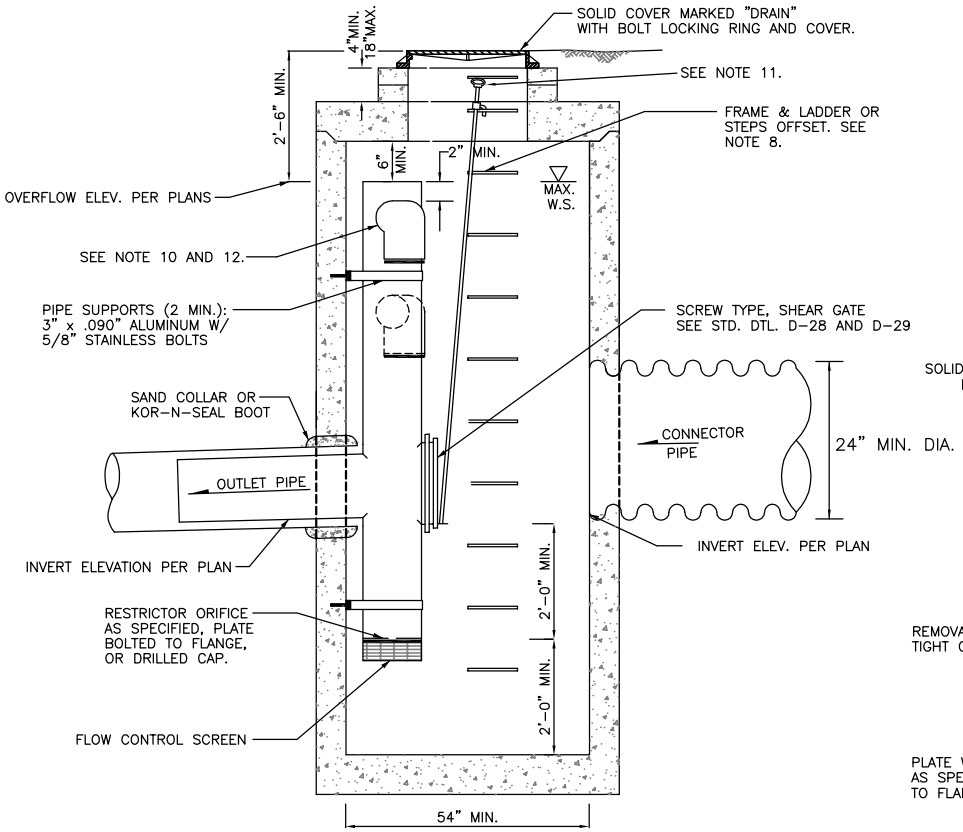

CATCH BASIN TYPE 2

DIAM. AS REQUIRED BY PLANS

NOTE:
ATTACH SCREEN TO CMP CROSS W/ 6 1" METAL SCREWS-2 PER STRAP, OR USE STAINLESS STEEL PIPE CLAMP

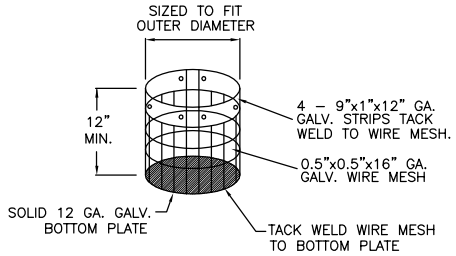

FLOW CONTROL SCREEN

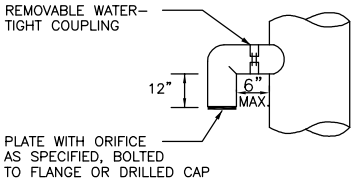

ELBOW DETAIL

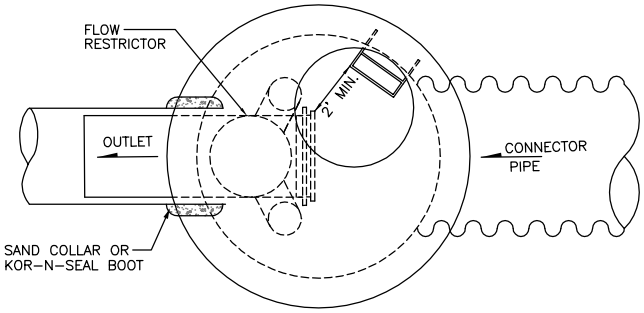

PLAN

NOTES:

1. PIPE SIZES, INVERT ELEVATIONS, ORIFICE SIZES, OVERFLOW ELEVATIONS AND SLOPES; PER ENGINEER APPROVED STAMPED PLANS.
2. OUTLET CAPACITY: NOT LESS THAN COMBINED INLETS.
3. EXCEPT AS SHOWN OR NOTED, UNITS SHALL BE CONSTRUCTED IN ACCORDANCE WITH THE REQUIREMENTS FOR CATCH BASIN TYPE 2, 54" MIN. DIAM.
4. PIPE SUPPORTS AND RESTRICTOR SHALL BE OF SAME MATERIAL, AND BE ANCHORED AT 3' MAX. SPACING BY 5/8" DIAMETER STAINLESS STEEL EXPANSION BOLTS OR EMBEDDED 2" IN WALL.
5. THE RESTRICTOR SHALL BE FABRICTED FROM 0.060" ALUMINUM, PVC, CPE, OR HDPE PIPE PER THESE ENGINEERING STANDARDS.
6. OUTLET SHALL BE CONNECTED TO STORM DRAINAGE PIPE WITH SUITABLE COUPLER OR GROUTED INTO THE BELL OF CONCRETE PIPE.
7. THE VERTICAL RISER STEM OF THE RESTICTOR SHALL BE THE SAME DIAM. AS THE HORIZONTAL OUTLET PIPE, WITH AN 8" MIN. DIAM. VERTICLE RISER SECTION SHALL BE ALIGNED PLUMB VERTICALLY. HORIZONTAL SECTION SHALL MATCH OUTLET PIPE SLOPE.
8. FRAME AND LADDER OR STEPS OFFSET SO THAT:
   A. SCREW TYPE SHEAR GATE IS VISIBLE FROM TOP.
   B. CLIMB DOWN SPACE IS CLEAR OF RISER AND SCREW TYPE SHEAR GATE.
   C. FRAME IS CLEAR OF CURB.
9. IF METAL OUTLET PIPE CONNECTS TO CEMENT CONCRETE PIPE: OUTLET PIPE TO HAVE SMOOTH O.D. EQUAL TO CONCRETE PIPE I.D. LESS 1/4".
10. MULTI-ORIFICE ELBOWS MAY BE LOCATED AS SHOWN OR ALL ON ONE SIDE OF RISER TO ASSURE LADDER CLEARANCE.
11. IF PIVOTING TYPE SHEAR GATE IS USED (PRIVATE SYSTEMS ONLY) SHEAR GATE HANDLE SHALL BE ATTACHED TO ADDER/STEP LOCATED WITHIN 24" ACCESS SECTION.
12. IF NOTCHED WEIR IS USED IN LIEU OF ELBOW, BAFFLE SHALL NOT OBSTRUCT ACCESS TO THE STRUCTURE.
13. APPLY NON-SHRINK GROUT TO INSIDE AND OUTSIDE OF ALL JOINTS, RINGS, RISERS, FRAMES AND PIPE PENETRATIONS.
14. PENETRATE CARRIER PIPE THROUGH VAULT WALL.
15. USE APPROVED WATERTIGHT STRUCTURE ADAPTOR.
16. SLIP SMOOTH-BORE HORIZONTAL LEG OF FLOW CONTROL TEE INSIDE CARRIER PIPE.
17. NO FLOW CONTROL JOINT OUTSIDE OF STRUCTURE.

City of Bellevue

STORM AND SURFACE WATER UTILITY

TITLE

FLOW CONTROL STRUCTURE

JANUARY 2014 NO SCALE

NO. D-26