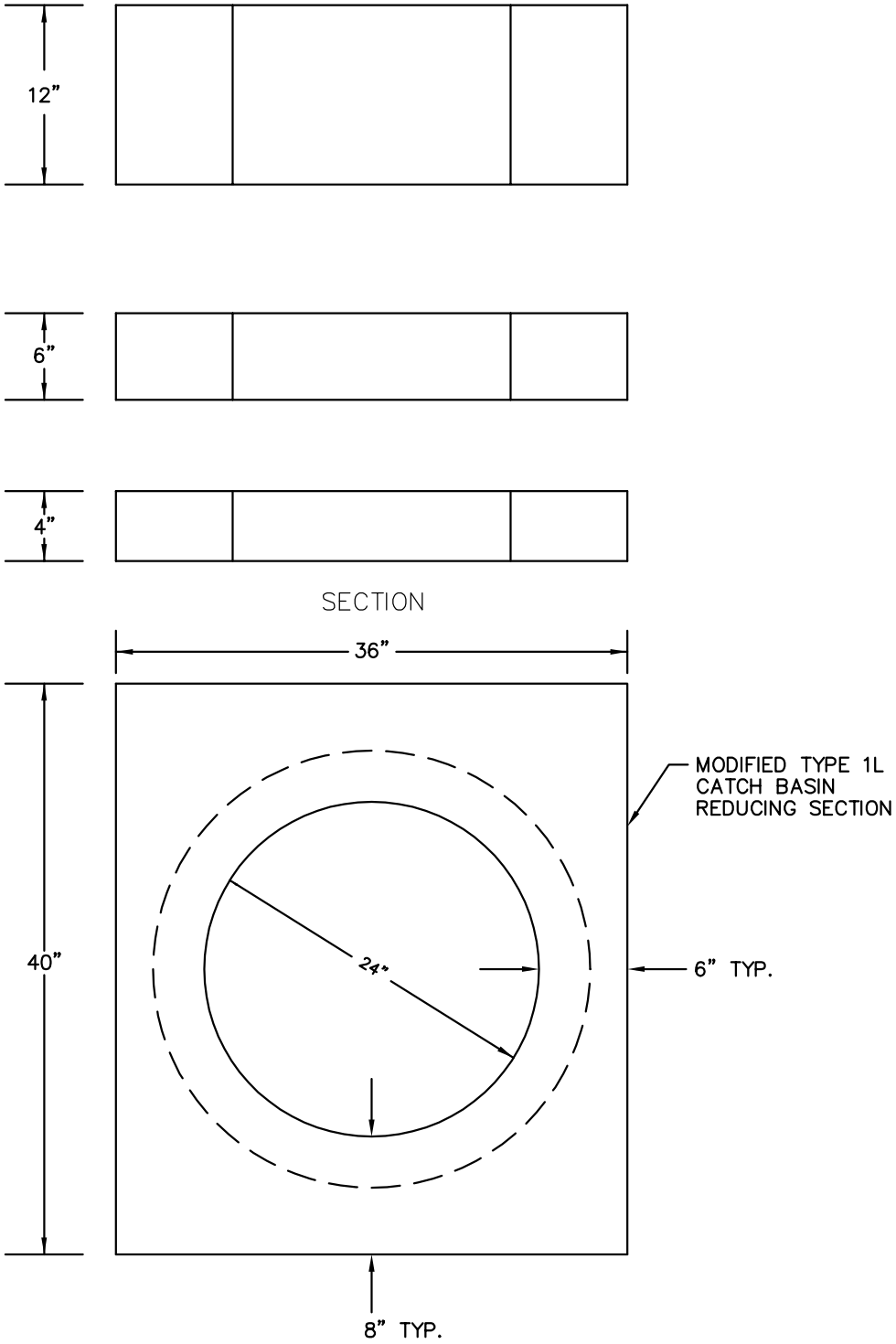

NOTES:

1. ITEMS SHOWN SHALL BE PRE-CAST,
2. APPLY NON-SHRINK GROUT TO INSIDE AND OUTSIDE OF ALL JOINTS, RISERS, RINGS AND FRAMES.

JANUARY 2014 NO SCALE

City of Bellevue

STORM AND SURFACE WATER UTILITY

TITLE

CONVERSION RISER FOR CATCH BASIN TYPE 1-L

NO. D-15