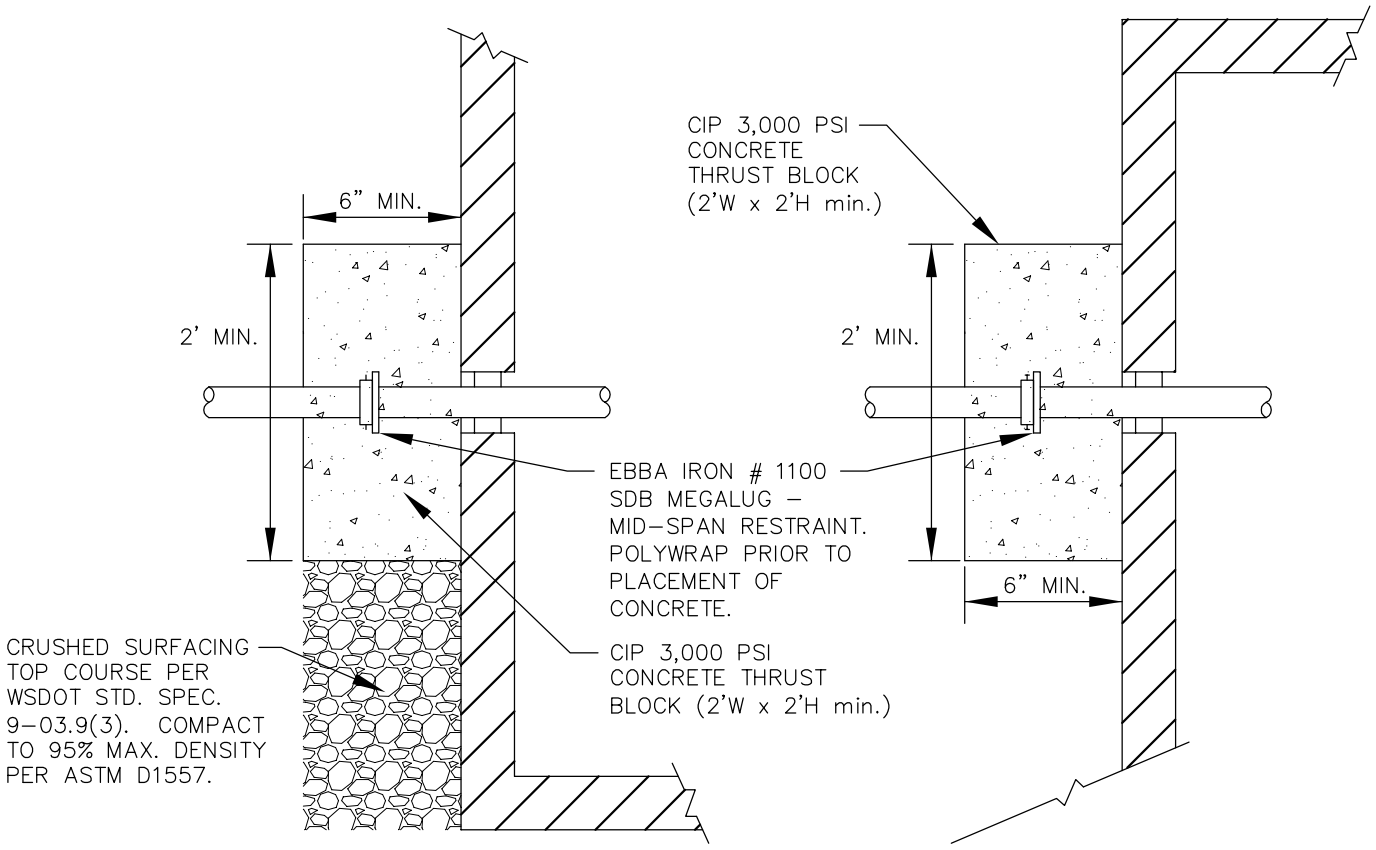

THRUST BLOCK ADJACENT TO VAULT

NTS

City of Bellevue

WATER UTILITY

TITLE

THRUST BLOCK ADJACENT TO VAULT

JANUARY 2013

NO SCALE

NO. W–56