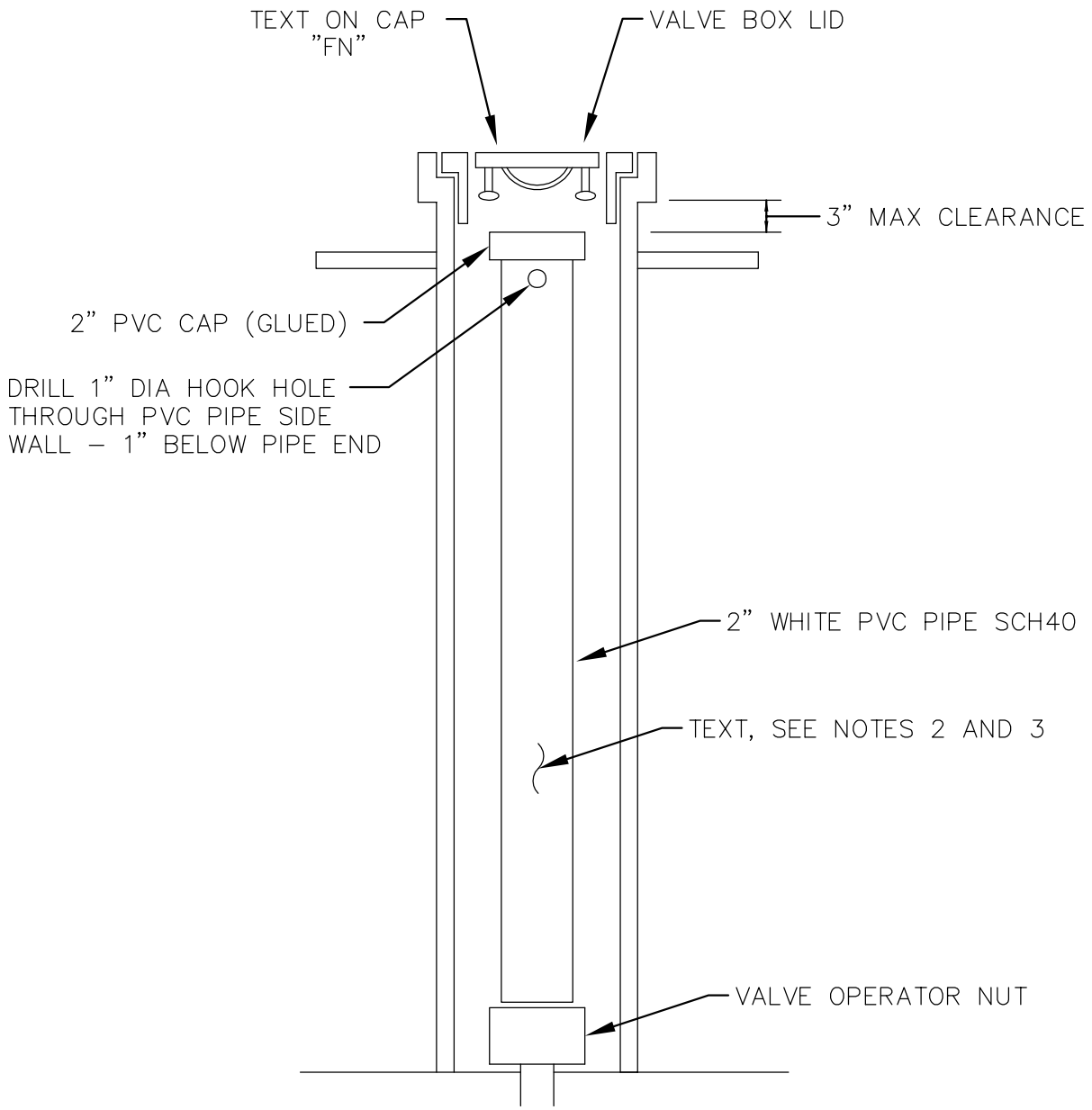

NOTES:

1. CUT 2" PVC SCH40 TO LENGTH TO REST ON OPERATOR NUT AND EXTEND WITHIN 3" OF TOP OF VALVE BOX .
2. TEXT ON PVC PIPE SHALL READ "FIRE LINE – DO NOT CLOSE VALVE."
3. TEXT SHALL BE PRINTED CLEARLY AND NEATLY WITH A BLACK PERMANENT INK MARKING PEN.

City of Bellevue

WATER UTILITY

TITLE

FIRELINE VALVE MARKER

JANUARY 2013

NO SCALE

NO. W–55